WILMA P. MANKILLER HEALTH CENTER EXPANSION

BID PACKAGE 01

(DEMOLITION / STEEL / FOUNDATIONS)

INDEX OF DRAWINGS - BID PACKAGE 01

SHEET NUMBER	SHEET NAME	11-01-19 - BID PACKAGE 01
GENERAL		
G0.01	COVER / INDEX	
CIVIL		
C002	GENERAL NOTES	
CS100	EXISTING SITE PLAN	
CS101	DEMOLITION PLAN	
CS102	DEMOLITION PLAN	
CE100	EROSION CONTROL SITE PLAN	
CE500	EROSION CONTROL DETAILS	
ARCHITECTURAL		
A0.01	OVERALL BUILDING DEMOLITION PLAN	
STRUCTURAL		
S0.01	ABBREVIATIONS AND LEGENDS	
S0.02	GENERAL STRUCTURAL NOTES	
S0.03	GENERAL STRUCTURAL NOTES AND SPECIAL INSPECTIONS	
SD0.01	DEMOLITION GENERAL STRUCTURAL NOTES	
SD1.01	DEMOLITION PLANS -SECTOR 1	
SD2.01	DEMOLITION SECTIONS	
S1.00	OVERALL PLAN - FOUNDATION	
S1.01	FOUNDATION PLAN SECTOR 1	
S1.02	FOUNDATION PLAN SECTOR 2	
S1.10	OVERALL PLAN - FLOOR FRAMING	
S1.11	FLOOR FRAMING PLAN - SECTOR 1	
S1.12	FLOOR FRAMING PLAN - SECTOR 2	
S1.13	LOW ROOF FRAMING PLAN	
S1.20	OVERALL PLAN - ROOF FRAMING	
S1.21	ROOF FRAMING PLAN - SECTOR 1	
S1.22	ROOF FRAMING PLAN - SECTOR 2	
S2.01	MOMENT FRAME ELEVATIONS	
S2.02	MOMENT FRAME AND BRACED FRAME ELEVATIONS	
S3.01	WALL SECTIONS	
S3.02	WALL SECTIONS	
S3.03	WALL SECTIONS	
S3.04	WALL SECTIONS	
S3.11	FOUNDATION SECTIONS	
S3.12	FOUNDATION SECTIONS	
S3.21	FLOOR FRAMING SECTIONS	
S3.31	ROOF FRAMING SECTIONS	
S4.01	ENLARGED PLANS	
S5.21	MASONRY FRAMING SECTIONS AND DETAILS	
S5.41	VERTICAL CIRCULATION DETAILS	
S5.51	STEEL DETAILS	
S5.52	STEEL DETAILS	
S5.53	STEEL DETAILS	
S6.01	SCHEDULES	
S7.11	TYPICAL CONCRETE DETAILS	
S7.21	TYPICAL MASONRY DETAILS	
S7.31	TYPICAL COLD-FORMED DETAILS	
S7.41	TYPICAL STEEL DETAILS	
S7.42	TYPICAL STEEL DETAILS	
S8.01	SIDEPLATE GENERAL NOTES AND CONSTRUCTION GUIDELINES	
S8.02	SIDEPLATE COLUMN DETAILS, A TYPE	
S8.03	SIDEPLATE COLUMN DETAILS, B TYPE	
S8.04	SIDEPLATE BEAM DETAILS	
S8.05	SIDEPLATE BEAM DETAILS, NARROW	
S8.06	SIDEPLATE FIELD ERECTION DETAILS	
S8.07	SIDEPLATE MISC DETAILS AND COORDINATION ITEMS	
ELECTRICAL		
DE1.0	ELECTRICAL DEMOLITION PLAN	
Grand total: 54		

1836 SOUTH BALTIMORE AVE.
TULSA, OK 74119
(539) 664-4618

MECHANICAL / ELECTRICAL / PLUMBING ENGINEER

3902 UNIVERSITY BOULEVARD
DURANT, OK 74701
(580) 931-9045

CIVIL ENGINEER

4700 LINCOLN ROAD NE, SUITE 102
ALBUQUERQUE, NM 87109
(505) 344-4080

STRUCTURAL ENGINEER

808 TRAVIS STREET, SUITE 200
HOUSTON, TX 77002
(281) 589-5900

FIRE PROTECTION / LIFE SAFETY

1316 E 35TH PLACE, SUITE 100
TULSA, OK 74105
(918) 382-9120

EQUIPMENT PLANNER

James R. Childers Architect, Inc.
45 South 4th Street
Fort Smith, AR 72901
479-783-2480
www.childersarchitect.com

PROFESSIONAL SEAL:

STATE OF OKLAHOMA
JAMES R. CHILDERS
REGISTERED ARCHITECT

11-01-2019

CONSULTANT LOGO:

CLIENT:

THE CHEROKEE NATION
SEPT. 6, 1839

WILMA P. MANKILLER HEALTH CENTER EXPANSION
STILWELL, OKLAHOMA

KEY PLAN:

PROJECT PHASE:
BID PACKAGE 01

REVISIONS		
#	DATE	DESCRIPTION

DATE:	JOB NUMBER:
11-01-19	18-01.01

SHEET NUMBER:
G0.01

COVER / INDEX

GENERAL NOTES

1. THE CONTRACTOR SHALL HAVE EXISTING UTILITIES LOCATED PRIOR TO CONSTRUCTION. CONTRACTOR SHALL CALL "OKIE" 1-800-522-6543 IN ADDITION TO DIRECT NOTIFICATION. CONTRACTOR SHALL BRACE UTILITY POLES AS NECESSARY. UTILITIES DAMAGED BY THE CONTRACTOR SHALL BE REPAIRED TO THE UTILITY OWNER'S SPECIFICATIONS BY THE CONTRACTOR AT NO COST TO THE OWNER.
2. THE CONTRACTOR SHALL ESTABLISH, INSTALL, OPERATE, AND MAINTAIN COMPLETE AND ADEQUATE AND SAFE TRAFFIC CONTROLS DURING THE ENTIRE CONSTRUCTION PERIOD. ALL TRAFFIC CONTROL DEVICES SHALL BE APPROVED BY THE ENGINEER.
3. ALL DIMENSIONS OR ELEVATIONS WITH ± SHALL BE CONFIRMED BY THE CONTRACTOR.
4. ALL DIMENSIONS OF EXISTING STRUCTURES AND EQUIPMENT SHALL BE VERIFIED BY THE CONTRACTOR. ANY DISCREPANCIES SHALL BE BROUGHT TO THE ATTENTION OF THE ENGINEER & OWNER.
5. TOPSOIL IN THE DISTURBED AREAS SHALL BE REMOVED, STOCKPILED, AND RESTORED AFTER CONSTRUCTION OPERATIONS, IN ACCORDANCE WITH PROJECT SPECIFICATIONS. ALL EXCESS TOPSOIL SHALL BE CONSIDERED WASTE AND STOCKPILED ON-SITE BY THE CONTRACTOR, UNLESS OTHERWISE NOTED.
6. ALL DISTURBED ROADWAY AND DRIVEWAY SURFACES SHALL BE RESTORED TO THEIR PRE-CONSTRUCTION CONDITION.
7. FALL PROTECTION AROUND ALL OPENINGS AND EXCAVATION SHALL BE MAINTAINED AT ALL TIMES.
8. NORTH ARROWS SHOWN ON DRAWINGS INDICATE LOCAL COORDINATE SYSTEM ESTABLISHED BY THE SURVEYOR, UNLESS OTHERWISE NOTED.
9. TRENCH SAFETY AND SHORING IN ACCORDANCE WITH CURRENT OSHA REGULATIONS SHALL BE EMPLOYED BY CONTRACTOR AT ALL TIMES.
10. IF AT ANY POINT CONSTRUCTION ACTIVITIES EXPOSE ARCHEOLOGICAL MATERIALS SUCH AS CHIPPED STONE, TOOLS, POTTERY, BONE, HISTORIC CROCKERY, GLASS, METAL ITEMS OR BUILDING MATERIALS, THE OKLAHOMA ARCHEOLOGICAL SURVEY STATE ARCHEOLOGIST, KARY L. STACKELBECK, SHALL BE CONTACTED IMMEDIATELY AT 405-325-7211.
11. ALL STATIONS SHOWN ON THE PLANS ARE CENTERLINE STATIONS UNLESS NOTED OTHERWISE.
12. THE TOPOGRAPHIC SURVEY WAS COMPLETED BY NATIVE PLAINS SURVEYING & MAPPING, LLC. ALL EXISTING INFORMATION IS SHOWN AS ACCURATELY AS POSSIBLE BASE UPON FIELD RECONNAISSANCE AND RESEARCH. CONTRACTOR IS RESPONSIBLE FOR VERIFYING ALL EXISTING INFORMATION. IF CONTRACTOR BELIEVES EXISTING INFORMATION IS INACCURATE, THE CONTRACTOR MAY HAVE A NEW SURVEY COMPLETED AT NO ADDITIONAL COST TO THE OWNER, ARCHITECT, OR ENGINEER.
13. DIMENSIONS SHOWN ARE TO BACK OF CURB OR CENTERLINE OF PIPE UNLESS NOTED OTHERWISE.
14. CONTRACTOR SHALL REVIEW & COORDINATE W/ ARCHITECTURAL, MECH., ELEC., & PLUMBING DISCIPLINES DRAWINGS, SPEC'S & DETAILS. ANY DISCREPANCIES SHALL BE BROUGHT TO THE ATTENTION OF THE ENGINEER. IN THE EVENT THAT THE ARCH. &/OR CONTRACTOR DEVIATES CONSTRUCTION FROM THESE PLANS W/O THE EXPRESS WRITTEN APPROVAL OF THE ENGINEER, THE ARCH. &/OR CONTRACTOR ASSUMES FULL RESPONSIBILITY FOR THOSE MODIFICATIONS.

EROSION CONTROL NOTES:

1. SILT FENCE SHALL BE MAINTAINED AND SEDIMENT BUILDUP REGULARLY REMOVED UNTIL PAVING OPERATIONS ARE COMPLETE AND/OR SEEDING IS IN PLACE AND 75% VEGETATION STABILIZATION IS OBTAINED.
2. ALL TREES, BRUSH, AND OTHER DEBRIS THAT MIGHT INTERFERE WITH THE FLOW OF WATER IS TO BE CLEANED OUT TO THE RIGHT-OF-WAY LINE AT EACH STRUCTURE, IN A MANNER APPROVED BY THE ENGINEER.
3. ALL FLOW LINES THAT ARE TO BE FILLED SHALL BE THOROUGHLY COMPACTED TO 95% STANDARD PROCTOR DENSITY BEFORE CONSTRUCTION OR EXTENSION OF DRAINAGE STRUCTURES.
4. IN ORDER TO ALLEVIATE DUST CONDITIONS DURING GRADING OPERATIONS, AND AFTER GRADING OPERATIONS ARE COMPLETED, BUT BEFORE PAVEMENT AND/OR PERMANENT EROSION CONTROL WORK IS COMPLETED, THE CONTRACTOR SHALL SPRINKLE GRADING AT INTERVALS APPROVED BY THE OWNERS REPRESENTATIVE.
5. ALL UNPAVED DISTURBED AREAS SHALL RECEIVE SLAB SOD FOR PERMANENT EROSION CONTROL, UNLESS NOTED OTHERWISE. THIS SHALL INCLUDE FERTILIZER, WATERING & MOWING AS REQUIRED TO ESTABLISH A VIABLE TURF.
6. AT THE BEGINNING OF THE TURF OPERATIONS, ANY AREAS INCLUDED IN PLANNED QUANTITIES THAT HAVE GROWN A SATISFACTORY VOLUNTEER TURF OF PERENNIAL GRASS AS DETERMINED BY THE OWNER'S REPRESENTATIVE, SHALL BE FERTILIZED AND WATERED BUT SHALL NOT BE SEEDED, SODDED OR SPRIGGED.
7. VEGETATIVE MULCH AND SEEDING SHALL BE UTILIZED FOR TEMPORARY EROSION CONTROL.
8. SEED: THE FOLLOWING KINDS OF SEEDS, AT ACRES-RATES INDICATED BELOW, SHALL BE PLANTED ON THE AREAS DESIGNATED FOR SEEDING.

TEMPORARY SEEDING

KINDS OF SEED TO BE FURNISHED	QUANTITY PER ACRE
COOL SEASON MIX-	
PERENNIAL RYEGRASS (LOLIUM PERENNE)	20 LBS. OF SEED
CRIMSOM CLOVER (TRIFOLIUM INCARNATUM)	12 LBS. OF SEED
WARM SEASON MIX-	
KOREAN LESPEDEZA (LESPEDEZA STRIATA)	12 LBS. OF SEED
CRIMSOM CLOVER (TRIFOLIUM INCARNATUM)	20 LBS. OF SEED
LITTLE BLUESTEM (ANDROPOGON SCOPARIUS)	12 LBS. OF SEED
COMMON BERMUDA (CYNODON DACYLON)	4 LBS. OF SEED

VEGETATIVE MULCHING: THE VEGETATIVE MULCH SHALL BE ANCHORED IN ACCORDANCE WITH THE "ADHESIVE SPRAY METHOD", AS SPECIFIED IN 233.04(b) OF THE ODOT STANDARD SPECIFICATIONS.

SEASONAL PLANTING RESTRICTIONS

THE PLANTING OF SPRIGGING SHALL BE RESTRICTED TO THE PERIOD FROM APRIL 1ST TO JUNE 30TH.

THE PLANTING OF TEMPORARY SEEDS (COOL SEASON MIX) SHALL BE RESTRICTED TO THE PERIOD FROM SEPTEMBER 1ST TO NOVEMBER 15TH.

THE PLANTING OF TEMPORARY SEEDS (WARM SEASON MIX) SHALL BE RESTRICTED TO THE PERIOD FROM MARCH 15TH TO JUNE 30TH.

AREAS ON WHICH SALVAGED TOPSOIL IS TO BE REPLACED SHALL HAVE 0-46-0 FERTILIZER APPLIED, AT THE RATE OF 150 LBS. PER ACRE, JUST PRIOR TO THE REPLACEMENT OF SALVAGED TOPSOIL.

SITE WORK NOTES

1. ALL EARTHWORK & PAVING MATERIALS & METHODS SHALL CONFORM WITH OKLAHOMA DEPARTMENT OF TRANSPORTATION STANDARD SPECIFICATIONS FOR HIGHWAY CONSTRUCTION, LATEST REVISION, UNLESS OTHERWISE NOTED.
2. CONTRACTOR SHALL REVIEW GEOTECHNICAL REPORT PREPARED BY BUILDING & EARTH, DATED AUGUST 30, 2018. ANY DISCREPANCIES SHALL BE BROUGHT TO THE ATTENTION OF THE ENGINEER.THIS REPORT SHOULD BE CONSIDERED A PART OF THESE CONSTRUCTION DOCUMENTS.
3. ONLY REMOVE TREES THAT DIRECTLY INTERFERE WITH CONSTRUCTION. CONTRACTOR SHALL LIMIT CLEARING & GRUBBING TO BUILDING & PARKING AREA FOOTPRINT, AS MUCH AS POSSIBLE.
4. CONTRACTOR SHALL DISPOSE OF TREES, STUMPS, DEBRIS, ETC. OFF SITE IN A MANNER APPROVED BY THE OWNER.
5. ALL AREAS TO RECEIVE PAVING SHALL BE STRIPPED OF VEGETATION, TOPSOIL, SOFT OR OTHERWISE SUITABLE MATERIAL. THIS WOULD INCLUDE AREAS IDENTIFIED FOR UNDERCUT, AREA SHALL BE SCARIFIED TO A DEPTH OF 8 INCHES, MOISTURE CONDITIONED TO A RANGE OF 1% BELOW TO 3% ABOVE THE MATERIAL'S OPTIMUM MOISTURE CONTENT, & COMPACTED TO A DENSITY OF AT LEAST 95% OF THE STANDARD PROCTOR (ASTM D 698) MAXIMUM DRY DENSITY. SUBGRADE SHALL BE PROOF ROLLED WITH A ROLLER OR TRUCK (GROSS WEIGHT OF 25 TONS OR MORE). SOFT AREAS SHALL BE EXCAVATED & REPLACED WITH SUITABLE MATERIAL. PROOF ROLLING SHALL BE WITNESSED BY OWNER'S REPRESENTATIVE. OWNER SHALL DETERMINE SUITABILITY OF SUBGRADE. REFER TO GEOTECHNICAL RECOMMENDATIONS.
6. WHERE LIMESTONE IS EXPOSED AT FINISHED SUBGRADE, IT IS RECOMMENDED TO UNDERCUT THE LIMESTONE ROCK UNTIL A LEVEL THAT WILL ALLOW FOR PLACEMENT OF AT LEAST 8" OF STRUCTURAL FILL TO PROVIDE FOR UNIFORM SUBGRADE CONDITIONS ACROSS PAVEMENT AREAS,
7. REMOVE ANY STUMPS, ROOTS LARGER THAN 2 INCHES IN DIAMETER, ROCKS LARGER THAN 3 INCHES AND ANY MATTED ROOTS, TO A DEPTH OF 18 INCHES BELOW ORIGINAL GROUND SURFACE.
8. SELECT FILL SHALL BE COMPOSED OF MATERIAL WITH MAXIMUM DRY DENSITY IN EXCESS OF 100 POUNDS PER CUBIC FOOT, PLASTICITY INDEX (PI) LESS THAN 18, AND A LIQUID LIMIT (LL) LESS THAN 40. STRUCTURAL FILL SHOULD BE FREE OF ANY ORGANICS, SHOULD NOT CONTAIN ROCK FRAGMENTS GREATER THAN 3 INCHES IN ANY DIMENSION, AND SHOULD BE PROPERLY MOISTURE CONDITIONED PRIOR TO USE AS SELECT FILL. SELECT FILL SHOULD BE COMPACTED TO A MINIMUM OF 95% OF THE STANDARD PROCTOR MAXIMUM DRY DENSITY AND WITHIN ±2% OF THE OPTIMUM MOISTURE AS DETERMINED BY ASTM D 698. THE FILL MATERIAL SHOULD BE SPREAD IN HORIZONTAL LIFTS STARTING AT THE LOWEST ELEVATION. THE LIFTS SHOULD NOT EXCEED 8 TO 12 INCHES IN LOOSE LIFT THICKNESS.
9. REUSE OF ON SITE SOILS AS FILL IS NOT RECOMMENDED BELOW PLANNED BUILDING OR PAVEMENT AREAS.
10. ALL DISTURBED AREAS THAT ARE NOT PAVED ARE TO RECEIVE SLAB SODDING.
11. EARTHWORKS SHALL BE PERFORMED IN SUCH A MANNER TO MINIMIZE PONDING WATER ON THE SUBGRADE. SITE SHALL MAINTAIN DRAINAGE AT ALL TIMES. MOISTURE CONTENT OF SOIL SHOULD BE MAINTAINED NEAR OPTIMUM DURING CONSTRUCTION.
12. ALL ROCKS AND DEBRIS SHALL BE REMOVED FROM ALL DRAINS PRIOR TO FINAL INSPECTION.
13. ROADSIDE HAZARDS SHALL BE COMPLETELY BARRICADED AROUND THEIR PERIMETER FOR THE SAFETY OF PEDESTRIANS AND VEHICLES.
14. ONLY THE AMOUNT OF TRENCH THAT CAN BE BACK FILLED OR SURFACED IN (2) DAYS SHALL BE ALLOWED OPEN UNLESS APPROVED BY OWNER'S REPRESENTATIVE.
15. ANY EXISTING FOUNDATIONS OR FOOTINGS SHALL BE REMOVED FULL DEPTH, & BACKFILLED WITH APPROVED COMPACTED MATERIAL.
16. THIS BID PACKAGE IS INTENDED TO INCLUDE ONLY DEMOLITION RELATED TASKS INCLUDING BUT NOT LIMITED TO EROSION CONTROL ITEMS, STRIPPING/SALVAGING TOP SOIL, DEMOLITION, SUBGRADE MAINTENANCE.

UTILITY NOTES

1. THE CONTRACTOR SHALL PROTECT ALL EXISTING UTILITIES AND SERVICES FROM DAMAGE. UTILITIES SHALL REMAIN IN SERVICE AT ALL TIMES, AND ANY DISRUPTION OF SERVICE SHALL BE AT THE CONTRACTOR'S SOLE EXPENSE.
2. CONTRACTOR SHALL VERIFY EXISTING PIPE SIZE, TYPE AND LOCATION TO INSURE PROPER CONNECTION.
3. THE PLANS HAVE BEEN PREPARED TO SHOW THE APPROXIMATE LOCATION OF EXISTING KNOWN UTILITIES. THE CONTRACTOR SHALL CONTACT OKIE, EACH RESPECTIVE UTILITY COMPANY AND THE PROJECT OWNER TO DETERMINE THE EXACT LOCATION OF UNDERGROUND UTILITIES PRIOR TO EXCAVATION. ANY CHANGE IN ALIGNMENT OR GRADE CAUSED BY INTERFERING UTILITIES SHALL BE MADE BY THE CONTRACTOR AT NO COST TO THE OWNER AND THE ENGINEER NOTIFIED.
4. DEPTHS OF ANY EXISTING UTILITIES SHOWN ON THE PLANS ARE APPROXIMATE. CONTRACTOR SHALL AT HIS OWN EXPENSE UNCOVER AND VERIFY THE LOCATION AND ELEVATION OF EXISTING UTILITIES IN ADVANCE OF THE CONSTRUCTION.

PROPOSED SITE LEGEND

- SD — SD — STORM WATER LINE
- W — W — WATER LINE
- UGE — UGE — UNDERGROUND ELECTRIC LINE
- GAS — GAS — GAS LINE
- SS — SS — SANITARY SEWER LINE
- CENTER LINE OF DRIVES
- XXX — PROPOSED CONTOURS
- XXX — CONTOURS
- WM — WATER METER
- GATE VALVE
- SIDEWALK AREA
- GRAVEL PARKING

James R. Childers Architect, Inc.
45 South 4th Street
Fort Smith, AR 72901
479-783-2480
www.childersarchitect.com

PROFESSIONAL SEAL:

REGISTERED PROFESSIONAL ENGINEER — H. WAYNE BARKER — 18513 — 11-1-19 — OKLAHOMA

CONSULTANT LOGO:

Barker & Associates
3902 UNIVERSITY BLVD
Durant, OK 74701
580.931.9045
OK. CA. 3936
EXP. 06/30/2020

CLIENT:

THE CHEROKEE NATION — SEPT. 6, 1839

WILMA P. MANKILLER HEALTH CENTER EXPANSION

STILWELL, OKLAHOMA

KEY PLAN:

PROJECT PHASE:

BID PACKAGE 01

REVISIONS

#	DATE	DESCRIPTION

DATE: 11.01.19

JOB NUMBER: 18-01.01

SHEET NUMBER: C002

GENERAL NOTES

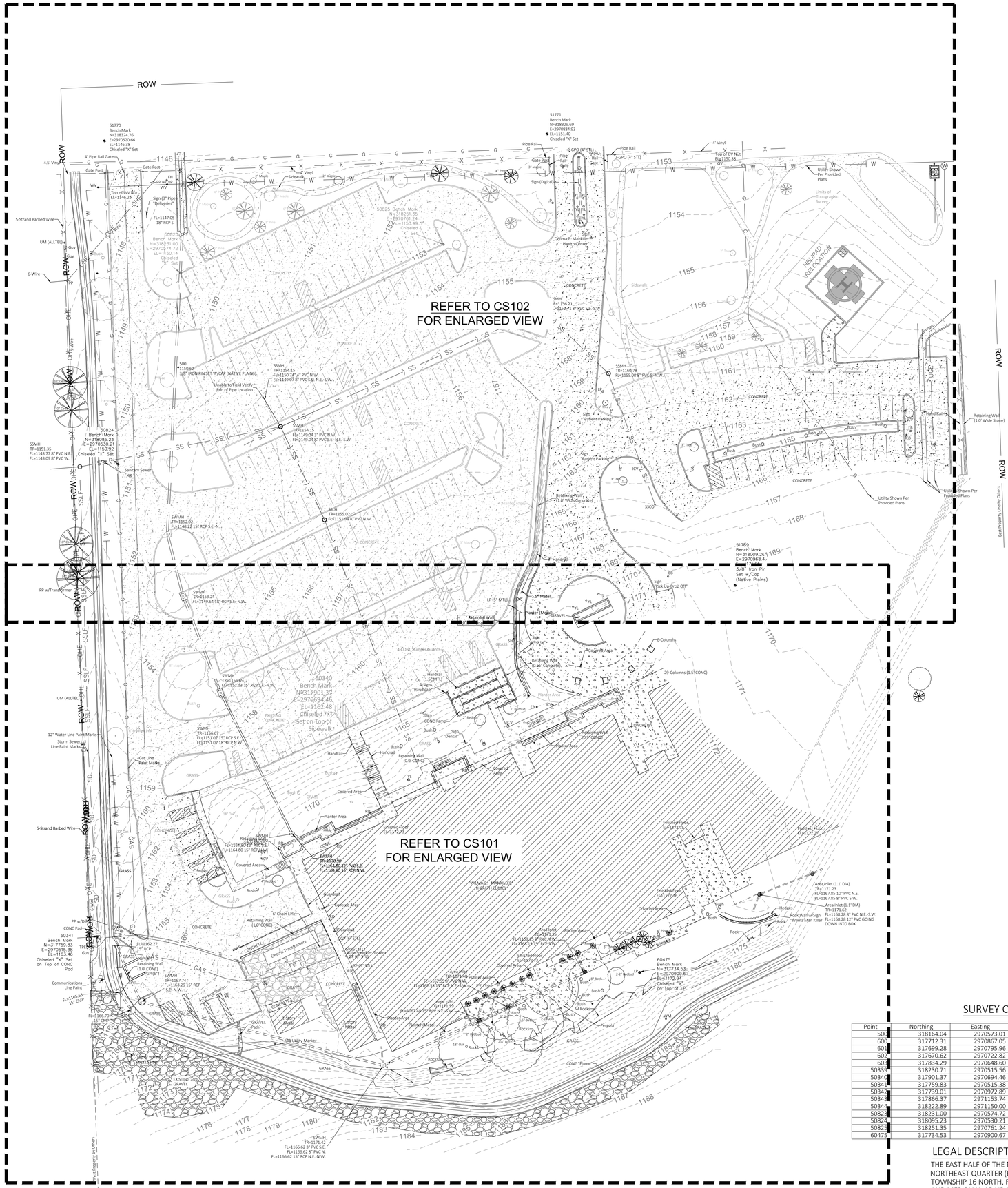
ROW
51770
Bench Mark
N=318324.76
E=2970520.66
EL=1146.38
Chiseled "X" Set
51771
Bench Mark
N=318329.69
E=2970834.93
EL=1151.40
Chiseled "X" Set
REFER TO CS102
FOR ENLARGED VIEW
REFER TO CS101
FOR ENLARGED VIEW
HELIPAD RELOCATION
50825 Bench Mark
N=318251.35
E=2970761.24
EL=1153.49
Chiseled "L" Set
50823
Bench Mark
N=318231.00
E=2970574.72
EL=1150.14
Chiseled "L"
50824
Bench Mark
N=318095.23
E=2970530.21
EL=1150.92
Chiseled "X" Set
50340
Bench Mark
N=317901.33
E=2970694.46
EL=1162.48
Chiseled "X" Set on Top of Concrete Sidewalk
60475
Bench Mark
N=317734.53
E=2970900.67
EL=1172.94
Chiseled "X" on Top of I.P.
51769
Bench Mark
N=318009.26
E=2970968.47
3/8" Iron Pin Set w/Cap (Native Plains)
500
1150.62
3/8" IRON PIN SET W/CAP (NATIVE PLAINS)
Unable to Field Verify - Exit of Pipe Location
SSMH
TR=1154.15
FI=1150.78 E 8" PVC N.W.
FI=1149.07 8" PVC S.E.-N.E.-S.W.
SSMH
TR=1154.15
FI=1149.04 3" PVC N.W.
FI=1149.04 8" PVC S.E.-N.E.-S.W.
SSMH
TR=1160.78
FI=1155.08 8" PVC S-N.W.
SSMH
TR=1151.35
FI=1143.77 8" PVC N.E
FI=1143.09 8" PVC W.
SWMH
TR=1152.02
FI=1148.22 15" RCP S.E.-N.
SWMH
TR=1155.02
FI=1151.08 8" PVC N.W.
SWMH
TR=1153.23
FI=1149.64 18" RCP S.E.-N.W.
SWMH
TR=1156.67
FI=1151.07 15" RCP S.E.
FI=1151.02 18" RCP N.W.
SWMH
TR=1154.69
FI=1152.14 15" RCP S.E.-N.W.
SWMH
TR=1157.50
FI=1154.80 12" PVC S.E.
FI=1154.80 15" RCP N.W.
SWMH
TR=1157.50
FI=1154.80 15" RCP N.E.
FI=1154.80 15" RCP N.W.
SWMH
TR=1162.27
FI=1158.74 - S.E.-N.W.-
FI=1163.29 15" RCP S.E.-N.W.
SWMH
TR=1171.42
FI=1166.62 3" PVC S.E.
FI=1166.62 8" PVC N.
FI=1166.62 15" RCP N.E.-N.W.
Area Inlet (1.1' DIA)
TR=1171.23
FI=1167.85 10" PVC N.E.
FI=1167.85 8" PVC S.W.
Area Inlet (1.1' DIA)
TR=1171.62
FI=1168.28 8" PVC N.E.-S.W.
FI=1168.28 12" PVC GOING DOWN INTO BOX
Area Inlet
TR=1171.34
FI=1167.53 8" PVC N.W.
FI=1167.53 15" RCP N.E.-S.W.
Area Inlet
TR=1171.40
FI=1167.53 15" RCP S.W.
Area Inlet
TR=1171.40
FI=1165.45 8" PVC N.W.
FI=1165.45 15" RCP S.W.
Area Inlet
TR=1171.40
FI=1165.78 15" RCP N.W.
FI=1165.78 18" RCP S.E.
Top of IDV N.G.
FI=1150.38
Top of IDV Rcd
FI=1144.19
Sign (3" Pipe) "Deliverier"
Sign (Digital)
Sign (Pole Up Cross Off)
Sign "Dental"
Sign CONC Ramp
Sign "Pull"
Sign "Push"
Sign "Van Accessible"
Sign "Ambulance Only"
Sign "Emergency Entrance"
Sign "Emergency Only"
Sign "Do Not Enter"
Sign "Exit Only"
Sign "One Way"
Sign "Stop"
Sign "Yield"
Sign "Speed Limit 15"
Sign "Speed Limit 25"
Sign "Speed Limit 30"
Sign "Speed Limit 35"
Sign "Speed Limit 40"
Sign "Speed Limit 45"
Sign "Speed Limit 50"
Sign "Speed Limit 55"
Sign "Speed Limit 60"
Sign "Speed Limit 65"
Sign "Speed Limit 70"
Sign "Speed Limit 75"
Sign "Speed Limit 80"
Sign "Speed Limit 85"
Sign "Speed Limit 90"
Sign "Speed Limit 95"
Sign "Speed Limit 100"
Sign "Speed Limit 105"
Sign "Speed Limit 110"
Sign "Speed Limit 115"
Sign "Speed Limit 120"
Sign "Speed Limit 125"
Sign "Speed Limit 130"
Sign "Speed Limit 135"
Sign "Speed Limit 140"
Sign "Speed Limit 145"
Sign "Speed Limit 150"
Sign "Speed Limit 155"
Sign "Speed Limit 160"
Sign "Speed Limit 165"
Sign "Speed Limit 170"
Sign "Speed Limit 175"
Sign "Speed Limit 180"
Sign "Speed Limit 185"
Sign "Speed Limit 190"
Sign "Speed Limit 195"
Sign "Speed Limit 200"
Sign "Speed Limit 205"
Sign "Speed Limit 210"
Sign "Speed Limit 215"
Sign "Speed Limit 220"
Sign "Speed Limit 225"
Sign "Speed Limit 230"
Sign "Speed Limit 235"
Sign "Speed Limit 240"
Sign "Speed Limit 245"
Sign "Speed Limit 250"
Sign "Speed Limit 255"
Sign "Speed Limit 260"
Sign "Speed Limit 265"
Sign "Speed Limit 270"
Sign "Speed Limit 275"
Sign "Speed Limit 280"
Sign "Speed Limit 285"
Sign "Speed Limit 290"
Sign "Speed Limit 295"
Sign "Speed Limit 300"
Sign "Speed Limit 305"
Sign "Speed Limit 310"
Sign "Speed Limit 315"
Sign "Speed Limit 320"
Sign "Speed Limit 325"
Sign "Speed Limit 330"
Sign "Speed Limit 335"
Sign "Speed Limit 340"
Sign "Speed Limit 345"
Sign "Speed Limit 350"
Sign "Speed Limit 355"
Sign "Speed Limit 360"
Sign "Speed Limit 365"
Sign "Speed Limit 370"
Sign "Speed Limit 375"
Sign "Speed Limit 380"
Sign "Speed Limit 385"
Sign "Speed Limit 390"
Sign "Speed Limit 395"
Sign "Speed Limit 400"
Sign "Speed Limit 405"
Sign "Speed Limit 410"
Sign "Speed Limit 415"
Sign "Speed Limit 420"
Sign "Speed Limit 425"
Sign "Speed Limit 430"
Sign "Speed Limit 435"
Sign "Speed Limit 440"
Sign "Speed Limit 445"
Sign "Speed Limit 450"
Sign "Speed Limit 455"
Sign "Speed Limit 460"
Sign "Speed Limit 465"
Sign "Speed Limit 470"
Sign "Speed Limit 475"
Sign "Speed Limit 480"
Sign "Speed Limit 485"
Sign "Speed Limit 490"
Sign "Speed Limit 495"
Sign "Speed Limit 500"
Sign "Speed Limit 505"
Sign "Speed Limit 510"
Sign "Speed Limit 515"
Sign "Speed Limit 520"
Sign "Speed Limit 525"
Sign "Speed Limit 530"
Sign "Speed Limit 535"
Sign "Speed Limit 540"
Sign "Speed Limit 545"
Sign "Speed Limit 550"
Sign "Speed Limit 555"
Sign "Speed Limit 560"
Sign "Speed Limit 565"
Sign "Speed Limit 570"
Sign "Speed Limit 575"
Sign "Speed Limit 580"
Sign "Speed Limit 585"
Sign "Speed Limit 590"
Sign "Speed Limit 595"
Sign "Speed Limit 600"
Sign "Speed Limit 605"
Sign "Speed Limit 610"
Sign "Speed Limit 615"
Sign "Speed Limit 620"
Sign "Speed Limit 625"
Sign "Speed Limit 630"
Sign "Speed Limit 635"
Sign "Speed Limit 640"
Sign "Speed Limit 645"
Sign "Speed Limit 650"
Sign "Speed Limit 655"
Sign "Speed Limit 660"
Sign "Speed Limit 665"
Sign "Speed Limit 670"
Sign "Speed Limit 675"
Sign "Speed Limit 680"
Sign "Speed Limit 685"
Sign "Speed Limit 690"
Sign "Speed Limit 695"
Sign "Speed Limit 700"
Sign "Speed Limit 705"
Sign "Speed Limit 710"
Sign "Speed Limit 715"
Sign "Speed Limit 720"
Sign "Speed Limit 725"
Sign "Speed Limit 730"
Sign "Speed Limit 735"
Sign "Speed Limit 740"
Sign "Speed Limit 745"
Sign "Speed Limit 750"
Sign "Speed Limit 755"
Sign "Speed Limit 760"
Sign "Speed Limit 765"
Sign "Speed Limit 770"
Sign "Speed Limit 775"
Sign "Speed Limit 780"
Sign "Speed Limit 785"
Sign "Speed Limit 790"
Sign "Speed Limit 795"
Sign "Speed Limit 800"
Sign "Speed Limit 805"
Sign "Speed Limit 810"
Sign "Speed Limit 815"
Sign "Speed Limit 820"
Sign "Speed Limit 825"
Sign "Speed Limit 830"
Sign "Speed Limit 835"
Sign "Speed Limit 840"
Sign "Speed Limit 845"
Sign "Speed Limit 850"
Sign "Speed Limit 855"
Sign "Speed Limit 860"
Sign "Speed Limit 865"
Sign "Speed Limit 870"
Sign "Speed Limit 875"
Sign "Speed Limit 880"
Sign "Speed Limit 885"
Sign "Speed Limit 890"
Sign "Speed Limit 895"
Sign "Speed Limit 900"
Sign "Speed Limit 905"
Sign "Speed Limit 910"
Sign "Speed Limit 915"
Sign "Speed Limit 920"
Sign "Speed Limit 925"
Sign "Speed Limit 930"
Sign "Speed Limit 935"
Sign "Speed Limit 940"
Sign "Speed Limit 945"
Sign "Speed Limit 950"
Sign "Speed Limit 955"
Sign "Speed Limit 960"
Sign "Speed Limit 965"
Sign "Speed Limit 970"
Sign "Speed Limit 975"
Sign "Speed Limit 980"
Sign "Speed Limit 985"
Sign "Speed Limit 990"
Sign "Speed Limit 995"
Sign "Speed Limit 1000"
Sign "Speed Limit 1005"
Sign "Speed Limit 1010"
Sign "Speed Limit 1015"
Sign "Speed Limit 1020"
Sign "Speed Limit 1025"
Sign "Speed Limit 1030"
Sign "Speed Limit 1035"
Sign "Speed Limit 1040"
Sign "Speed Limit 1045"
Sign "Speed Limit 1050"
Sign "Speed Limit 1055"
Sign "Speed Limit 1060"
Sign "Speed Limit 1065"
Sign "Speed Limit 1070"
Sign "Speed Limit 1075"
Sign "Speed Limit 1080"
Sign "Speed Limit 1085"
Sign "Speed Limit 1090"
Sign "Speed Limit 1095"
Sign "Speed Limit 1100"
Sign "Speed Limit 1105"
Sign "Speed Limit 1110"
Sign "Speed Limit 1115"
Sign "Speed Limit 1120"
Sign "Speed Limit 1125"
Sign "Speed Limit 1130"
Sign "Speed Limit 1135"
Sign "Speed Limit 1140"
Sign "Speed Limit 1145"
Sign "Speed Limit 1150"
Sign "Speed Limit 1155"
Sign "Speed Limit 1160"
Sign "Speed Limit 1165"
Sign "Speed Limit 1170"
Sign "Speed Limit 1175"
Sign "Speed Limit 1180"
Sign "Speed Limit 1185"
Sign "Speed Limit 1190"
Sign "Speed Limit 1195"
Sign "Speed Limit 1200"
Sign "Speed Limit 1205"
Sign "Speed Limit 1210"
Sign "Speed Limit 1215"
Sign "Speed Limit 1220"
Sign "Speed Limit 1225"
Sign "Speed Limit 1230"
Sign "Speed Limit 1235"
Sign "Speed Limit 1240"
Sign "Speed Limit 1245"
Sign "Speed Limit 1250"
Sign "Speed Limit 1255"
Sign "Speed Limit 1260"
Sign "Speed Limit 1265"
Sign "Speed Limit 1270"
Sign "Speed Limit 1275"
Sign "Speed Limit 1280"
Sign "Speed Limit 1285"
Sign "Speed Limit 1290"
Sign "Speed Limit 1295"
Sign "Speed Limit 1300"
Sign "Speed Limit 1305"
Sign "Speed Limit 1310"
Sign "Speed Limit 1315"
Sign "Speed Limit 1320"
Sign "Speed Limit 1325"
Sign "Speed Limit 1330"
Sign "Speed Limit 1335"
Sign "Speed Limit 1340"
Sign "Speed Limit 1345"
Sign "Speed Limit 1350"
Sign "Speed Limit 1355"
Sign "Speed Limit 1360"
Sign "Speed Limit 1365"
Sign "Speed Limit 1370"
Sign "Speed Limit 1375"
Sign "Speed Limit 1380"
Sign "Speed Limit 1385"
Sign "Speed Limit 1390"
Sign "Speed Limit 1395"
Sign "Speed Limit 1400"
Sign "Speed Limit 1405"
Sign "Speed Limit 1410"
Sign "Speed Limit 1415"
Sign "Speed Limit 1420"
Sign "Speed Limit 1425"
Sign "Speed Limit 1430"
Sign "Speed Limit 1435"
Sign "Speed Limit 1440"
Sign "Speed Limit 1445"
Sign "Speed Limit 1450"
Sign "Speed Limit 1455"
Sign "Speed Limit 1460"
Sign "Speed Limit 1465"
Sign "Speed Limit 1470"
Sign "Speed Limit 1475"
Sign "Speed Limit 1480"
Sign "Speed Limit 1485"
Sign "Speed Limit 1490"
Sign "Speed Limit 1495"
Sign "Speed Limit 1500"
Sign "Speed Limit 1505"
Sign "Speed Limit 1510"
Sign "Speed Limit 1515"
Sign "Speed Limit 1520"
Sign "Speed Limit 1525"
Sign "Speed Limit 1530"
Sign "Speed Limit 1535"
Sign "Speed Limit 1540"
Sign "Speed Limit 1545"
Sign "Speed Limit 1550"
Sign "Speed Limit 1555"
Sign "Speed Limit 1560"
Sign "Speed Limit 1565"
Sign "Speed Limit 1570"
Sign "Speed Limit 1575"
Sign "Speed Limit 1580"
Sign "Speed Limit 1585"
Sign "Speed Limit 1590"
Sign "Speed Limit 1595"
Sign "Speed Limit 1600"
Sign "Speed Limit 1605"
Sign "Speed Limit 1610"
Sign "Speed Limit 1615"
Sign "Speed Limit 1620"
Sign "Speed Limit 1625"
Sign "Speed Limit 1630"
Sign "Speed Limit 1635"
Sign "Speed Limit 1640"
Sign "Speed Limit 1645"
Sign "Speed Limit 1650"
Sign "Speed Limit 1655"
Sign "Speed Limit 1660"
Sign "Speed Limit 1665"
Sign "Speed Limit 1670"
Sign "Speed Limit 1675"
Sign "Speed Limit 1680"
Sign "Speed Limit 1685"
Sign "Speed Limit 1690"
Sign "Speed Limit 1695"
Sign "Speed Limit 1700"
Sign "Speed Limit 1705"
Sign "Speed Limit 1710"
Sign "Speed Limit 1715"
Sign "Speed Limit 1720"
Sign "Speed Limit 1725"
Sign "Speed Limit 1730"
Sign "Speed Limit 1735"
Sign "Speed Limit 1740"
Sign "Speed Limit 1745"
Sign "Speed Limit 1750"
Sign "Speed Limit 1755"
Sign "Speed Limit 1760"
Sign "Speed Limit 1765"
Sign "Speed Limit 1770"
Sign "Speed Limit 1775"
Sign "Speed Limit 1780"
Sign "Speed Limit 1785"
Sign "Speed Limit 1790"
Sign "Speed Limit 1795"
Sign "Speed Limit 1800"
Sign "Speed Limit 1805"
Sign "Speed Limit 1810"
Sign "Speed Limit 1815"
Sign "Speed Limit 1820"
Sign "Speed Limit 1825"
Sign "Speed Limit 1830"
Sign "Speed Limit 1835"
Sign "Speed Limit 1840"
Sign "Speed Limit 1845"
Sign "Speed Limit 1850"
Sign "Speed Limit 1855"
Sign "Speed Limit 1860"
Sign "Speed Limit 1865"
Sign "Speed Limit 1870"
Sign "Speed Limit 1875"
Sign "Speed Limit 1880"
Sign "Speed Limit 1885"
Sign "Speed Limit 1890"
Sign "Speed Limit 1895"
Sign "Speed Limit 1900"
Sign "Speed Limit 1905"
Sign "Speed Limit 1910"
Sign "Speed Limit 1915"
Sign "Speed Limit 1920"
Sign "Speed Limit 1925"
Sign "Speed Limit 1930"
Sign "Speed Limit 1935"
Sign "Speed Limit 1940"
Sign "Speed Limit 1945"
Sign "Speed Limit 1950"
Sign "Speed Limit 1955"
Sign "Speed Limit 1960"
Sign "Speed Limit 1965"
Sign "Speed Limit 1970"
Sign "Speed Limit 1975"
Sign "Speed Limit 1980"
Sign "Speed Limit 1985"
Sign "Speed Limit 1990"
Sign "Speed Limit 1995"
Sign "Speed Limit 2000"
Sign "Speed Limit 2005"
Sign "Speed Limit 2010"
Sign "Speed Limit 2015"
Sign "Speed Limit 2020"
Sign "Speed Limit 2025"
Sign "Speed Limit 2030"
Sign "Speed Limit 2035"
Sign "Speed Limit 2040"
Sign "Speed Limit 2045"
Sign "Speed Limit 2050"
Sign "Speed Limit 2055"
Sign "Speed Limit 2060"
Sign "Speed Limit 2065"
Sign "Speed Limit 2070"
Sign "Speed Limit 2075"
Sign "Speed Limit 2080"
Sign "Speed Limit 2085"
Sign "Speed Limit 2090"
Sign "Speed Limit 2095"
Sign "Speed Limit 2100"
Sign "Speed Limit 2105"
Sign "Speed Limit 2110"
Sign "Speed Limit 2115"
Sign "Speed Limit 2120"
Sign "Speed Limit 2125"
Sign "Speed Limit 2130"
Sign "Speed Limit 2135"
Sign "Speed Limit 2140"
Sign "Speed Limit 2145"
Sign "Speed Limit 2150"
Sign "Speed Limit 2155"
Sign "Speed Limit 2160"
Sign "Speed Limit 2165"
Sign "Speed Limit 2170"
Sign "Speed Limit 2175"
Sign "Speed Limit 2180"
Sign "Speed Limit 2185"
Sign "Speed Limit 2190"
Sign "Speed Limit 2195"
Sign "Speed Limit 2200"
Sign "Speed Limit 2205"
Sign "Speed Limit 2210"
Sign "Speed Limit 2215"
Sign "Speed Limit 2220"
Sign "Speed Limit 2225"
Sign "Speed Limit 2230"
Sign "Speed Limit 2235"
Sign "Speed Limit 2240"
Sign "Speed Limit 2245"
Sign "Speed Limit 2250"
Sign "Speed Limit 2255"
Sign "Speed Limit 2260"
Sign "Speed Limit 2265"
Sign "Speed Limit 2270"
Sign "Speed Limit 2275"
Sign "Speed Limit 2280"
Sign "Speed Limit 2285"
Sign "Speed Limit 2290"
Sign "Speed Limit 2295"
Sign "Speed Limit 2300"
Sign "Speed Limit 2305"
Sign "Speed Limit 2310"
Sign "Speed Limit 2315"
Sign "Speed Limit 2320"
Sign "Speed Limit 2325"
Sign "Speed Limit 2330"
Sign "Speed Limit 2335"
Sign "Speed Limit 2340"
Sign "Speed Limit 2345"
Sign "Speed Limit 2350"
Sign "Speed Limit 2355"
Sign "Speed Limit 2360"
Sign "Speed Limit 2365"
Sign "Speed Limit 2370"
Sign "Speed Limit 2375"
Sign "Speed Limit 2380"
Sign "Speed Limit 2385"
Sign "Speed Limit 2390"
Sign "Speed Limit 2395"
Sign "Speed Limit 2400"
Sign "Speed Limit 2405"
Sign "Speed Limit 2410"
Sign "Speed Limit 2415"
Sign "Speed Limit 2420"
Sign "Speed Limit 2425"
Sign "Speed Limit 2430"
Sign "Speed Limit 2435"
Sign "Speed Limit 2440"
Sign "Speed Limit 2445"
Sign "Speed Limit 2450"
Sign "Speed Limit 2455"
Sign "Speed Limit 2460"
Sign "Speed Limit 2465"
Sign "Speed Limit 2470"
Sign "Speed Limit 2475"
Sign "Speed Limit 2480"
Sign "Speed Limit 2485"
Sign "Speed Limit 2490"
Sign "Speed Limit 2495"
Sign "Speed Limit 2500"
Sign "Speed Limit 2505"
Sign "Speed Limit 2510"
Sign "Speed Limit 2515"
Sign "Speed Limit 2520"
Sign "Speed Limit 2525"
Sign "Speed Limit 2530"
Sign "Speed Limit 2535"
Sign "Speed Limit 2540"
Sign "Speed Limit 2545"
Sign "Speed Limit 2550"
Sign "Speed Limit 2555"
Sign "Speed Limit 2560"
Sign "Speed Limit 2565"
Sign "Speed Limit 2570"
Sign "Speed Limit 2575"
Sign "Speed Limit 2580"
Sign "Speed Limit 2585"
Sign "Speed Limit 2590"
Sign "Speed Limit 2595"
Sign "Speed Limit 2600"
Sign "Speed Limit 2605"
Sign "Speed Limit 2610"
Sign "Speed Limit 2615"
Sign "Speed Limit 2620"
Sign "Speed Limit 2625"
Sign "Speed Limit 2630"
Sign "Speed Limit 2635"
Sign "Speed Limit 2640"
Sign "Speed Limit 2645"
Sign "Speed Limit 2650"
Sign "Speed Limit 2655"
Sign "Speed Limit 2660"
Sign "Speed Limit 2665"
Sign "Speed Limit 2670"
Sign "Speed Limit 2675"
Sign "Speed Limit 2680"
Sign "Speed Limit 2685"
Sign "Speed Limit 2690"
Sign "Speed Limit 2695"
Sign "Speed Limit 2700"
Sign "Speed Limit 2705"
Sign "Speed Limit 2710"
Sign "Speed Limit 2715"
Sign "Speed Limit 2720"
Sign "Speed Limit 2725"
Sign "Speed Limit 2730"
Sign "Speed Limit 2735"
Sign "Speed Limit 2740"
Sign "Speed Limit 2745"
Sign "Speed Limit 2750"
Sign "Speed Limit 2755"
Sign "Speed Limit 2760"
Sign "Speed Limit 2765"
Sign "Speed Limit 2770"
Sign "Speed Limit 2775"
Sign "Speed Limit 2780"
Sign "Speed Limit 2785"
Sign "Speed Limit 2790"
Sign "Speed Limit 2795"
Sign "Speed Limit 2800"
Sign "Speed Limit 2805"
Sign "Speed Limit 2810"
Sign "Speed Limit 2815"
Sign "Speed Limit 2820"
Sign "Speed Limit 2825"
Sign "Speed Limit 2830"
Sign "Speed Limit 2835"
Sign "Speed Limit 2840"
Sign "Speed Limit 2845"
Sign "Speed Limit 2850"
Sign "Speed Limit 2855"
Sign "Speed Limit 2860"
Sign "Speed Limit 2865"
Sign "Speed Limit 2870"
Sign "Speed Limit 2875"
Sign "Speed Limit 2880"
Sign "Speed Limit 2885"
Sign "Speed Limit 2890"
Sign "Speed Limit 2895"
Sign "Speed Limit 2900"
Sign "Speed Limit 2905"
Sign "Speed Limit 2910"
Sign "Speed Limit 2915"
Sign "Speed Limit 2920"
Sign "Speed Limit 2925"
Sign "Speed Limit 2930"
Sign "Speed Limit 2935"
Sign "Speed Limit 2940"
Sign "Speed Limit 2945"
Sign "Speed Limit 2950"
Sign "Speed Limit 2955"
Sign "Speed Limit 2960"
Sign "Speed Limit 2965"
Sign "Speed Limit 2970"
Sign "Speed Limit 2975"
Sign "Speed Limit 2980"
Sign "Speed Limit 2985"
Sign "Speed Limit 2990"
Sign "Speed Limit 2995"
Sign "Speed Limit 3000"
Sign "Speed Limit 3005"
Sign "Speed Limit 3010"
Sign "Speed Limit 3015"
Sign "Speed Limit 3020"
Sign "Speed Limit 3025"
Sign "Speed Limit 3030"
Sign "Speed Limit 3035"
Sign "Speed Limit 3040"
Sign "Speed Limit 3045"
Sign "Speed Limit 3050"
Sign "Speed Limit 3055"
Sign "Speed Limit 3060"
Sign "Speed Limit 3065"
Sign "Speed Limit 3070"
Sign "Speed Limit 3075"
Sign "Speed Limit 3080"
Sign "Speed Limit 3085"
Sign "Speed Limit 3090"
Sign "Speed Limit 3095"
Sign "Speed Limit 3100"
Sign "Speed Limit 3105"
Sign "Speed Limit 3110"
Sign "Speed Limit 3115"
Sign "Speed Limit 3120"
Sign "Speed Limit 3125"
Sign "Speed Limit 3130"
Sign "Speed Limit 3135"
Sign "Speed Limit 3140"
Sign "Speed Limit 3145"
Sign "Speed Limit 3150"
Sign "Speed Limit 3155"
Sign "Speed Limit 3160"
Sign "Speed Limit 3165"
Sign "Speed Limit 3170"
Sign "Speed Limit 3175"
Sign "Speed Limit 3180"
Sign "Speed Limit 3185"
Sign "Speed Limit 3190"
Sign "Speed Limit 3195"
Sign "Speed Limit 3200"
Sign "Speed Limit 3205"
Sign "Speed Limit 3210"
Sign "Speed Limit 3215"
Sign "Speed Limit 3220"
Sign "Speed Limit 3225"
Sign "Speed Limit 3230"
Sign "Speed Limit 3235"
Sign "Speed Limit 3240"
Sign "Speed Limit 3245"
Sign "Speed Limit 3250"
Sign "Speed Limit 3255"
Sign "Speed Limit 3260"
Sign "Speed Limit 3265"
Sign "Speed Limit 3270"
Sign "Speed Limit 3275"
Sign "Speed Limit 3280"
Sign "Speed Limit 3285"
Sign "Speed Limit 3290"
Sign "Speed Limit 3295"
Sign "Speed Limit 3300"
Sign "Speed Limit 3305"
Sign "Speed Limit 3310"
Sign "Speed Limit 3315"
Sign "Speed Limit 3320"
Sign "Speed Limit 3325"
Sign "Speed Limit 3330"
Sign "Speed Limit 3335"
Sign "Speed Limit 3340"
Sign "Speed Limit 3345"
Sign "Speed Limit 3350"
Sign "Speed Limit 3355"
Sign "Speed Limit 3360"
Sign "Speed Limit 3365"
Sign "Speed Limit 3370"
Sign "Speed Limit 3375"
Sign "Speed Limit 3380"
Sign "Speed Limit 3385"
Sign "Speed Limit 3390"
Sign "Speed Limit 3395"
Sign "Speed Limit 3400"
Sign "Speed Limit 3405"
Sign "Speed Limit 3410"
Sign "Speed Limit 3415"
Sign "Speed Limit 3420"
Sign "Speed Limit 3425"
Sign "Speed Limit 3430"
Sign "Speed Limit 3435"
Sign "Speed Limit 3440"
Sign "Speed Limit 3445"
Sign "Speed Limit 3450"
Sign "Speed Limit 3455"
Sign "Speed Limit 3460"
Sign "Speed Limit 3465"
Sign "Speed Limit 3470"
Sign "Speed Limit 3475"
Sign "Speed Limit 3480"
Sign "Speed Limit 3485"
Sign "Speed Limit 3490"
Sign "Speed Limit 3495"
Sign "Speed Limit 3500"
Sign "Speed Limit 3505"
Sign "Speed Limit 3510"
Sign "Speed Limit 3515"
Sign "Speed Limit 3520"
Sign "Speed Limit 3525"
Sign "Speed Limit 3530"
Sign "Speed Limit 3535"
Sign "Speed Limit 3540"
Sign "Speed Limit 3545"
Sign "Speed Limit 3550"
Sign "Speed Limit 3555"
Sign "Speed Limit 3560"
Sign "Speed Limit 3565"
Sign "Speed Limit 3570"
Sign "Speed Limit 3575"
Sign "Speed Limit 3580"
Sign "Speed Limit 3585"
Sign "Speed Limit 3590"
Sign "Speed Limit 3595"
Sign "Speed Limit 3600"
Sign "Speed Limit 3605"
Sign "Speed Limit 3610"
Sign "Speed Limit 3615"
Sign "Speed Limit 3620"
Sign "Speed Limit 3625"
Sign "Speed Limit 3630"
Sign "Speed Limit 3635"
Sign "Speed Limit 3640"
Sign "Speed Limit 3645"
Sign "Speed Limit 3650"
Sign "Speed Limit 3655"
Sign "Speed Limit 3660"
Sign "Speed Limit 3665"
Sign "Speed Limit 3670"
Sign "Speed Limit 3675"
Sign "Speed Limit 3680"
Sign "Speed Limit 3685"
Sign "Speed Limit 3690"
Sign "Speed Limit 3695"
Sign "Speed Limit 3700"
Sign "Speed Limit 3705"
Sign "Speed Limit 3710"
Sign "Speed Limit 3715"
Sign "Speed Limit 3720"
Sign "Speed Limit 3725"
Sign "Speed Limit 3730"
Sign "Speed Limit 3735"
Sign "Speed Limit 3740"
Sign "Speed Limit 3745"
Sign "Speed Limit 3750"
Sign "Speed Limit 3755"
Sign "Speed Limit 3760"
Sign "Speed Limit 3765"
Sign "Speed Limit 3770"
Sign "Speed Limit 3775"
Sign "Speed Limit 3780"
Sign "Speed Limit 3785"
Sign "Speed Limit 3790"
Sign "Speed Limit 3795"
Sign "Speed Limit 3800"
Sign "Speed Limit 3805"
Sign "Speed Limit 3810"
Sign "Speed Limit 3815"
Sign "Speed Limit 3820"
Sign "Speed Limit 3825"
Sign "Speed Limit 3830"
Sign "Speed Limit 3835"
Sign "Speed Limit 3840"
Sign "Speed Limit 3845"
Sign "Speed Limit 3850"
Sign "Speed Limit 3855"
Sign "Speed Limit 3860"
Sign "Speed Limit 3865"
Sign "Speed Limit 3870"
Sign "Speed Limit 3875"
Sign "Speed Limit 3880"
Sign "Speed Limit 3885"
Sign "Speed Limit 3890"
Sign "Speed Limit 3895"
Sign "Speed Limit 3900"
Sign "Speed Limit 3905"
Sign "Speed Limit 3910"
Sign "Speed Limit 3915"
Sign "Speed Limit 3920"
Sign "Speed Limit 3925"
Sign "Speed Limit 3930"
Sign "Speed Limit 3935"
Sign "Speed Limit 3940"
Sign "Speed Limit 3945"
Sign "Speed Limit 3950"
Sign "Speed Limit 3955"
Sign "Speed Limit 3960"
Sign "Speed Limit 3965"
Sign "Speed Limit 3970"
Sign "Speed Limit 3975"
Sign "Speed Limit 3980"
Sign "Speed Limit 3985"
Sign "Speed Limit 3990"
Sign "Speed Limit 3995"
Sign "Speed Limit 4000"
Sign "Speed Limit 4005"
Sign "Speed Limit 4010"
Sign "Speed Limit 4015"
Sign "Speed Limit 4020"
Sign "Speed Limit 4025"
Sign "Speed Limit 4030"
Sign "Speed Limit 4035"
Sign "Speed Limit 4040"
Sign "Speed Limit 4045"
Sign "Speed Limit 4050"
Sign "Speed Limit 4055"
Sign "Speed Limit 4060"
Sign "Speed Limit 4065"
Sign "Speed Limit 4070"
Sign "Speed Limit 4075"
Sign "Speed Limit 4080"
Sign "Speed Limit 4085"
Sign "Speed Limit 4090"
Sign "Speed Limit 4095"
Sign "Speed Limit 4100"
Sign "Speed Limit 4105"
Sign "Speed Limit 4110"
Sign "Speed Limit 4115"
Sign "Speed Limit 4120"
Sign "Speed Limit 4125"
Sign "Speed Limit 4130"
Sign "Speed Limit 4135"
Sign "Speed Limit 4140"
Sign "Speed Limit 4145"
Sign "Speed Limit 4150"
Sign "Speed Limit 4155"
Sign "Speed Limit 4160"
Sign "Speed Limit 4165"
Sign "Speed Limit 4170"
Sign "Speed Limit 4175"
Sign "Speed Limit 4180"
Sign "Speed Limit 4185"
Sign "Speed Limit 4190"
Sign "Speed Limit 4195"
Sign "Speed Limit 4200"
Sign "Speed Limit 4205"
Sign "Speed Limit 4210"
Sign "Speed Limit 4215"
Sign "Speed Limit 4220"
Sign "Speed Limit 4225"
Sign "Speed Limit 4230"
Sign "Speed Limit 4235"
Sign "Speed Limit 4240"
Sign "Speed Limit 4245"
Sign "Speed Limit 4250"
Sign "Speed Limit 4255"
Sign "Speed Limit 4260"
Sign "Speed Limit 4265"
Sign "Speed Limit 4270"
Sign "Speed Limit 4275"
Sign "Speed Limit 4280"
Sign "Speed Limit 4285"
Sign "Speed Limit 4290"
Sign "Speed Limit 4295"
Sign "Speed Limit 4300"
Sign "Speed Limit 4305"
Sign "Speed Limit 4310"
Sign "Speed Limit 4315"
Sign "Speed Limit 4320"
Sign "Speed Limit 4325"
Sign "Speed Limit 4330"
Sign "Speed Limit 4335"
Sign "Speed Limit 4340"
Sign "Speed Limit 4345"
Sign "Speed Limit 4350"
Sign "Speed Limit 4355"
Sign "Speed Limit 4360"
Sign "Speed Limit 4365"
Sign "Speed Limit 4370"
Sign "Speed Limit 4375"
Sign "Speed Limit 4380"
Sign "Speed Limit 4385"
Sign "Speed Limit 4390"
Sign "Speed Limit 4395"
Sign "Speed Limit 4400"
Sign "Speed Limit 4405"
Sign "Speed Limit 4410"
Sign "Speed Limit 4415"
Sign "Speed Limit 4420"
Sign "Speed Limit 4425"
Sign "Speed Limit 4430"
Sign "Speed Limit 4435"
Sign "Speed Limit 4440"
Sign "Speed Limit 4445"
Sign "Speed Limit 4450"
Sign "Speed Limit 4455"
Sign "Speed Limit 4460"
Sign "Speed Limit 4465"
Sign "Speed Limit 4470"
Sign "Speed Limit 4475"
Sign "Speed Limit 4480"
Sign "Speed Limit 4485"
Sign "Speed Limit 4490"
Sign "Speed Limit 4495"
Sign "Speed Limit 4500"
Sign "Speed Limit 4505"
Sign "Speed Limit 4510"
Sign "Speed Limit 4515"
Sign "Speed Limit 4520"
Sign "Speed Limit 4525"
Sign "Speed Limit 4530"
Sign "Speed Limit 4535"
Sign "Speed Limit 4540"
Sign "Speed Limit 4545"
Sign "Speed Limit 4550"
Sign "Speed Limit 4555"
Sign "Speed Limit 4560"
Sign "Speed Limit 4565"
Sign "Speed Limit 4570"
Sign "Speed Limit 4575"
Sign "Speed Limit 4580"
Sign "Speed Limit 4585"
Sign "Speed Limit 4590"
Sign "Speed Limit 4595"
Sign "Speed Limit 4600"
Sign "Speed Limit 4605"
Sign "Speed Limit 4610"
Sign "Speed Limit 4615"
Sign "Speed Limit 4620"
Sign "Speed Limit 4625"
Sign "Speed Limit 4630"
Sign "Speed Limit 4635"
Sign "Speed Limit 4640"
Sign "Speed Limit 4645"
Sign "Speed Limit 4650"
Sign "Speed Limit 4655"
Sign "Speed Limit 4660"
Sign "Speed Limit 4665"
Sign "Speed Limit 4670"
Sign "Speed Limit 4675"
Sign "Speed Limit 4680"
Sign "Speed Limit 4685"
Sign "Speed Limit 4690"
Sign "Speed Limit 4695"
Sign "Speed Limit 4700"
Sign "Speed Limit 4705"
Sign "Speed Limit 4710"
Sign "Speed Limit 4715"
Sign "Speed Limit 4720"
Sign "Speed Limit 4725"
Sign "Speed Limit 4730"
Sign "Speed Limit 4735"
Sign "Speed Limit 4740"
Sign "Speed Limit 4745"
Sign "Speed Limit 4750"
Sign "Speed Limit 4755"
Sign "Speed Limit 4760"
Sign "Speed Limit 4765"
Sign "Speed Limit 4770"
Sign "Speed Limit 4775"
Sign "Speed Limit 4780"
Sign "Speed Limit 4785"
Sign "Speed Limit 4790"
Sign "Speed Limit 4795"
Sign "Speed Limit 4800"
Sign "Speed Limit 4805"
Sign "Speed Limit 4810"
Sign "Speed Limit 4815"
Sign "Speed Limit 4820"
Sign "Speed Limit 4825"
Sign "Speed Limit 4830"
Sign "Speed Limit 4835"
Sign "Speed Limit 4840"
Sign "Spe

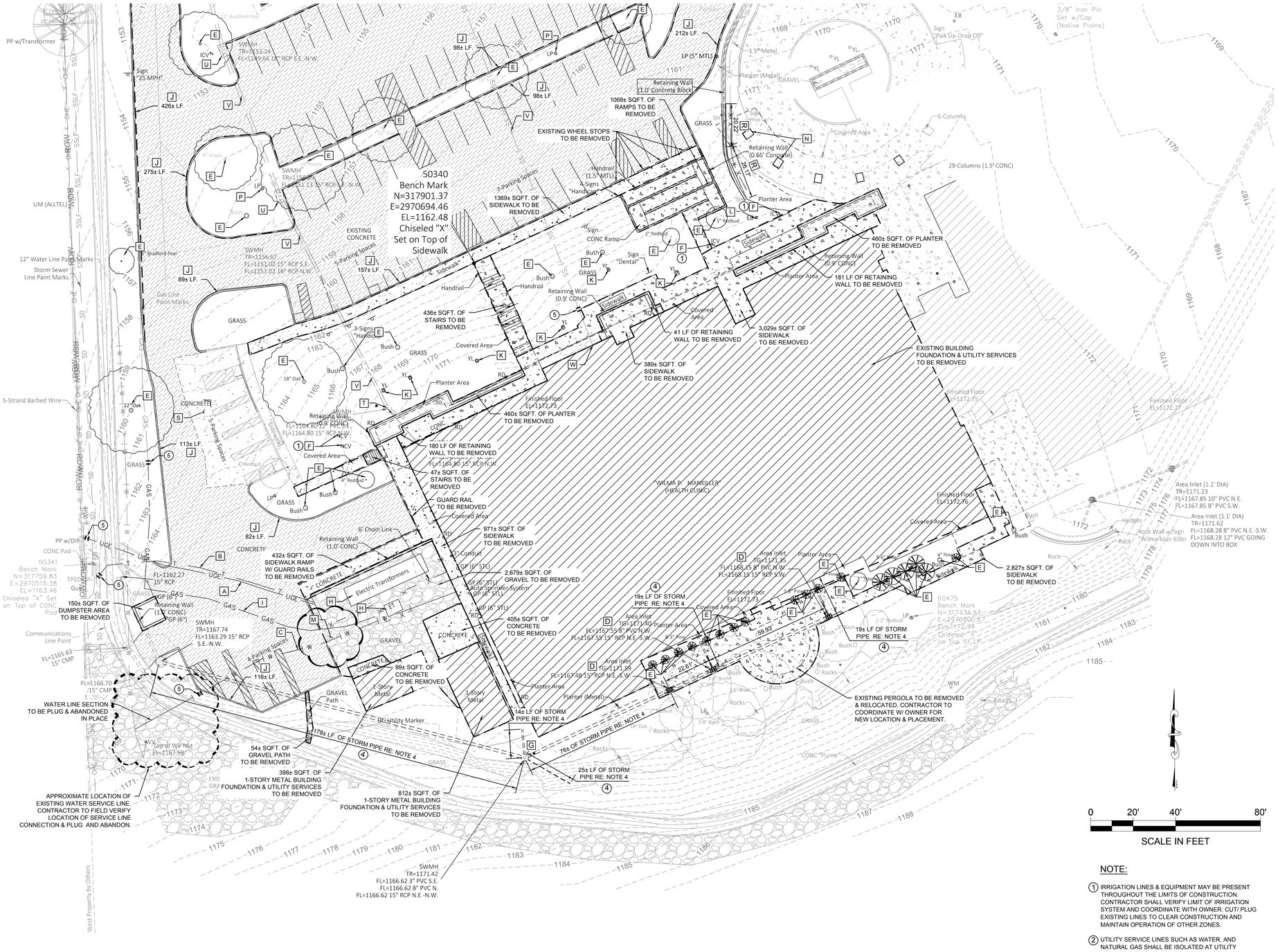

LEGEND

APROX. LIMITS OF DEMOLITION.

DEMOLITION LEGEND:

- A. 114± LF. OF UNDERGROUND ELECTRIC LINE TO BE REMOVED AND RELOCATED FROM UTILITY CUT OFF POINT TO EDGE OF BUILDING.
- B. 106± LF. OF TELEPHONE LINE TO BE REMOVED AND RELOCATED FROM UTILITY CUT OFF POINT TO EDGE OF BUILDING.
- C. 131± LF. OF WATER LINE TO BE REMOVED AND RELOCATED FROM UTILITY CUT OFF POINT TO EDGE OF BUILDING.
- D. EXISTING INLET TO REMAIN. RE: NOTE 4
- E. EXISTING SITE VEGETATION TO BE REMOVED. RE: NOTE 4
- F. EXISTING IRRIGATION VALVE TO BE REMOVED. RE: NOTE 4
- G. EXISTING STORM MANHOLE TO BE REMAIN. RE: NOTE 4
- H. EXISTING HVAC, GENERATOR & ELECTRICAL TRANSFORMER TO BE REMOVED. REFER TO MEP.
- I. 173± OF GAS LINE TO BE REMOVED AND RELOCATED FROM UTILITY CUT OFF POINT TO OUT SIDE OF BUILDING.
- J. EXISTING CURB TO BE REMOVED.
- K. EXISTING YARD LIGHT TO BE REMOVED.
- L. CONTRACTOR TO VERIFY IF EXISTING ELECTRIC BOX NEEDS TO BE REMOVED OR RELOCATED.
- M. APPROXIMATE LOCATION OF EXISTING FIRE HYDRANT, TO REMOVED ONLY AFTER INSTILLATION OF NEW FIRE HYDRANT.
- N. EXISTING COLUMN TO BE REMOVED, WITH CORRESPONDING ROOF SECTION.
- O. EXISTING FLUME TO BE REMOVED.
- P. EXISTING LIGHT POLE TO BE REMOVED.
- Q. EXISTING SITE SIGNAGE TO BE REMOVED/RELOCATE RE: OWNER/ARCH.
- R. EXISTING WALL SECTION TO BE REMOVED.
- S. EXISTING PAVEMENT TO REMAIN.
- T. EXISTING SEWER/STORM MANHOLE TO BE REMAIN AND ADJUSTED TO NEW GRADE IN FUTURE BID PACKAGE.
- U. EXISTING STORM INLET TOP TO BE REMAIN AND ADJUSTED TO NEW GRADE IN FUTURE BID PACKAGE.
- V. EXISTING UNDERGROUND UTILITY TO REMAIN IN PLACE DURING CONSTRUCTION. CONTRACTOR TO ENSURE NOT DISTURB OR DAMAGE DURING CONSTRUCTION.
- W. 19± LF. OF SEWER LINE TO BE REMOVED AND REPLACED FROM UTILITY CUT OFF POINT TO EDGE OF BUILDING.

95,152± SQFT. OF EXISTING CONCRETE PAVING TO BE REMOVED.

NOTE:

1. IRRIGATION LINES & EQUIPMENT MAY BE PRESENT THROUGHOUT THE LIMITS OF CONSTRUCTION. CONTRACTOR SHALL VERIFY LIMIT OF IRRIGATION SYSTEM AND COORDINATE WITH OWNER. CUT/ PLUG EXISTING LINES TO CLEAR CONSTRUCTION AND MAINTAIN OPERATION OF OTHER ZONES.
2. UTILITY SERVICE LINES SUCH AS WATER, AND NATURAL GAS SHALL BE ISOLATED AT UTILITY MAIN CONNECTION, TO ISOLATE CONSTRUCTION SITE WHILE MAINTAINING SERVICE TO OTHERS.
3. QUANTITIES ARE SHOWN FOR INFORMATION ONLY. CONTRACTOR TO FIELD VERIFY QUANTITIES.
4. EXISTING STORM SYSTEM TO REMAIN IN PLACE AND WILL BE REMOVED IN FUTURE BID PACKAGE. AFTER NEW STORM SYSTEM IS PLACED.
5. UTILITY CUT OFF POINT SYMBOL, THE BEGINNING POINT OF ANY UTILITY (GAS, WATER, SEWER, & ELECTRIC) LINE TO BE REMOVED.

James R. Childers Architect, Inc.
45 South 4th Street
Fort Smith, AR 72901
479-783-2480
www.childersarchitect.com

PROFESSIONAL SEAL:

REGISTERED PROFESSIONAL ENGINEER — H. WAYNE BARKER — 18313 — OKLAHOMA
11-1-19

CONSULTANT LOGO:

Barker & Associates
3502 UNIVERSITY BLVD
Durant, OK 74701
580.931.9045
OK. CA. 3590
EXP. 06/30/2020

CLIENT:

THE CHEROKEE NATION — SEPT. 6, 1839

WILMA P. MANKILLER HEALTH CENTER EXPANSION

STILWELL, OKLAHOMA

KEY PLAN:

PROJECT PHASE:

BID PACKAGE 01

REVISIONS		
#	DATE	DESCRIPTION

DATE: 11.01.19

JOB NUMBER: 18-01.01

SHEET NUMBER: CS101

DEMOLITION PLAN

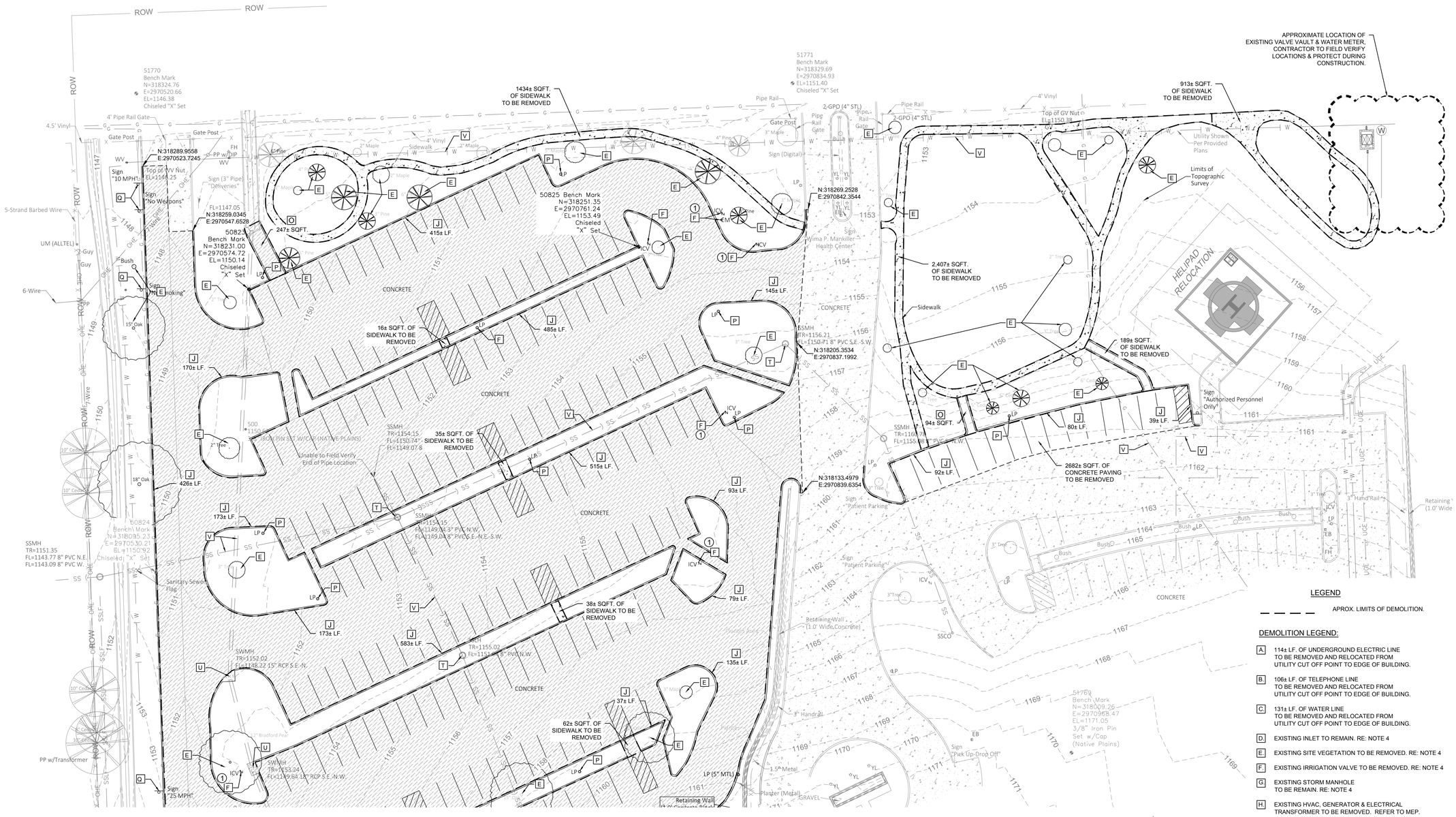



LEGEND

APROX. LIMITS OF DEMOLITION.

DEMOLITION LEGEND:

A. 114± LF. OF UNDERGROUND ELECTRIC LINE TO BE REMOVED AND RELOCATED FROM UTILITY CUT OFF POINT TO EDGE OF BUILDING.

B. 106± LF. OF TELEPHONE LINE TO BE REMOVED AND RELOCATED FROM UTILITY CUT OFF POINT TO EDGE OF BUILDING.

C. 131± LF. OF WATER LINE TO BE REMOVED AND RELOCATED FROM UTILITY CUT OFF POINT TO EDGE OF BUILDING.

D. EXISTING INLET TO REMAIN. RE: NOTE 4

E. EXISTING SITE VEGETATION TO BE REMOVED. RE: NOTE 4

F. EXISTING IRRIGATION VALVE TO BE REMOVED. RE: NOTE 4

G. EXISTING STORM MANHOLE TO BE REMAIN. RE: NOTE 4

H. EXISTING HVAC, GENERATOR & ELECTRICAL TRANSFORMER TO BE REMOVED. REFER TO MEP.

I. 173± OF GAS LINE TO BE REMOVED AND RELOCATED FROM UTILITY CUT OFF POINT TO OUT SIDE OF BUILDING.

J. EXISTING CURB TO BE REMOVED.

K. EXISTING YARD LIGHT TO BE REMOVED.

L. CONTRACTOR TO VERIFY IF EXISTING ELECTRIC BOX NEEDS TO BE REMOVED OR RELOCATED.

M. APPROXIMATE LOCATION OF EXISTING FIRE HYDRANT, TO REMOVED ONLY AFTER INSTILLATION OF NEW FIRE HYDRANT.

N. EXISTING COLUMN TO BE REMOVED, WITH CORRESPONDING ROOF SECTION.

O. EXISTING FLUME TO BE REMOVED.

P. EXISTING LIGHT POLE TO BE REMOVED.

Q. EXISTING SITE SIGNAGE TO BE REMOVED/RELOCATE RE: OWNER/ARCH.

R. EXISTING WALL SECTION TO BE REMOVED.

S. EXISTING PAVEMENT TO REMAIN.

T. EXISTING SEWER/STORM MANHOLE TO BE REMAIN AND ADJUSTED TO NEW GRADE IN FUTURE BID PACKAGE.

U. EXISTING STORM INLET TOP TO BE REMAIN AND ADJUSTED TO NEW GRADE IN FUTURE BID PACKAGE.

V. EXISTING UNDERGROUND UTILITY TO REMAIN IN PLACE DURING CONSTRUCTION. CONTRACTOR TO ENSURE NOT DISTURB OR DAMAGE DURING CONSTRUCTION.

W. 19± LF. OF SEWER LINE TO BE REMOVED AND REPLACED FROM UTILITY CUT OFF POINT TO EDGE OF BUILDING.

95,152± SQFT. OF EXISTING CONCRETE PAVING TO BE REMOVED.

NOTE:

1. IRRIGATION LINES & EQUIPMENT MAY BE PRESENT THROUGHOUT THE LIMITS OF CONSTRUCTION. CONTRACTOR SHALL VERIFY LIMIT OF IRRIGATION SYSTEM AND COORDINATE WITH OWNER. CUT/ PLUG EXISTING LINES TO CLEAR CONSTRUCTION AND MAINTAIN OPERATION OF OTHER ZONES.
2. UTILITY SERVICE LINES SUCH AS WATER, AND NATURAL GAS SHALL BE ISOLATED AT UTILITY MAIN CONNECTION, TO ISOLATE CONSTRUCTION SITE WHILE MAINTAINING SERVICE TO OTHERS.
3. QUANTITIES ARE SHOWN FOR INFORMATION ONLY. CONTRACTOR TO FIELD VERIFY QUANTITIES.
4. EXISTING STORM SYSTEM TO REMAIN IN PLACE AND WILL BE REMOVED IN FUTURE BID PACKAGE. AFTER NEW STORM SYSTEM IS PLACED.
5. UTILITY CUT OFF POINT SYMBOL, THE BEGINNING POINT OF ANY UTILITY (GAS, WATER, SEWER, & ELECTRIC) LINE TO BE REMOVED.

James R. Childers Architect, Inc.
45 South 4th Street
Fort Smith, AR 72901
479-783-2480
www.childersarchitect.com

PROFESSIONAL SEAL:

REGISTERED PROFESSIONAL ENGINEER
H. WAYNE BARKER
11-1-19
18813
OKLAHOMA

CONSULTANT LOGO:

Barker
Barker & Associates
3902 UNIVERSITY BLVD
Durant, OK 74701
580.931.9045
OK. CA. 3080
EXP. 06/30/2020

CLIENT:

TRIBE OF THE CHEROKEE NATION OF OKLAHOMA
SEPT. 6, 1839

WILMA P. MANKILLER HEALTH CENTER EXPANSION

STILWELL, OKLAHOMA

KEY PLAN:

PROJECT PHASE:
BID PACKAGE 01

REVISIONS		
#	DATE	DESCRIPTION

DATE: 11.01.19
JOB NUMBER: 18-01.01

SHEET NUMBER:
CS102

DEMOLITION PLAN

LEGEND

SILT FENCE
(RE: CE500 FOR DETAIL)

SILT DIKE
(RE: CE500 FOR DETAIL)

STABILIZED CONSTRUCTION ENTRANCE
(RE: CE500 FOR DETAIL)

INLET PROTECTION
RE: CE500 FOR DETAIL

CURB INLET PROTECTION,
RE: CE500 FOR DETAILS

SITE DESCRIPTION	
PROJECT:	WILMAP. MANKILLER HEALTH CENTER CHOCTAW NATION OKLAHOMA
LEGAL DESCRIPTION	E/2 NW/4 NE/4 OF SECTION 35, T16N, R25E OF THE INDIAN BASE AND MERIDIAN, ADAIR COUNTY, STATE OF OKLAHOMA.
LATITUDE	35°49'33.0"N
LONGITUDE	94°37'06.5"W
DISTURBED AREA	5.78 Acres
RUNOFF CO. EFF.	0.65
RECEIVING WATERS	CITY STORM WATER SYSTEM

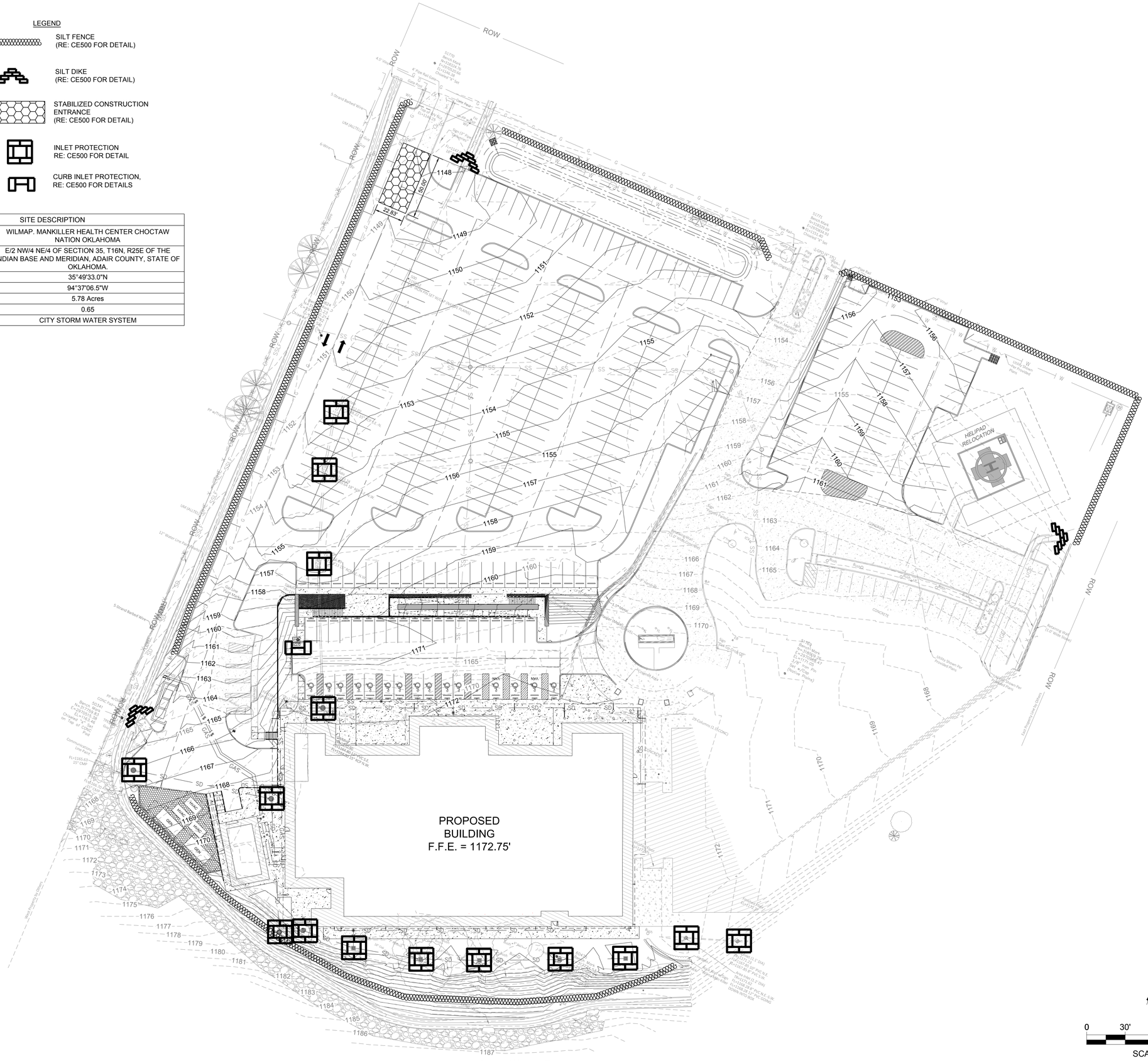

James R. Childers
Architect, Inc.
45 South 4th Street
Fort Smith, AR 72901
479-783-2480
www.childersarchitect.com

PROFESSIONAL SEAL:

REGISTERED PROFESSIONAL ENGINEER
H. WAYNE BARKER
18313
11-1-19
OKLAHOMA

CONSULTANT LOGO:

Barker
OKLAHOMA

Barker & Associates
3502 UNIVERSITY BLVD
Durant, OK 74701
580.931.9045
OK. CA. 3590
EXP. 06/30/2020

CLIENT:

THE CHEROKEE NATION
SEPT. 6, 1839

WILMA P. MANKILLER HEALTH CENTER EXPANSION

STILWELL, OKLAHOMA

KEY PLAN:

PROJECT PHASE:

BID PACKAGE 01

REVISIONS		
#	DATE	DESCRIPTION

DATE: 11.01.19

JOB NUMBER: 18-01.01

SHEET NUMBER: CE100

EROSION CONTROL SITE PLAN

GENERAL EROSION NOTES

1. THE STORM WATER POLLUTION PREVENTION PLAN IS COMPRISED OF THIS DRAWING (SITE MAP), THE STANDARD DETAILS, PLUS THE PERMIT AND ALL SUBSEQUENT REPORTS AND RELATED DOCUMENTS.
2. ALL CONTRACTORS AND SUBCONTRACTORS INVOLVED WITH STORM POLLUTION PREVENTION SHALL OBTAIN A COPY OF THE STORM WATER POLLUTION PREVENTION PLAN AND THE STATE NATIONAL POLLUTION DISCHARGE ELIMINATION SYSTEM GENERAL PERMIT (NPDES PERMIT) AND BECOME FAMILIAR WITH THEIR CONTENTS.
3. CONTRACTOR SHALL IMPLEMENT BEST MANAGEMENT PRACTICES AS REQUIRED BY THE SWPPP. ADDITIONAL BEST MANAGEMENT PRACTICES SHALL BE IMPLEMENTED AS DICTATED BY CONDITIONS AT NO ADDITIONAL COST OF OWNER THROUGHOUT ALL PHASES OF CONSTRUCTION
4. BEST MANAGE PRACTICES (BMP'S) AND CONTROLS SHALL CONFORM TO FEDERAL, STATE, OR LOCAL REQUIREMENTS OR MANUAL OF PRACTICE, AS APPLICABLE. CONTRACTOR SHALL IMPLEMENT ADDITIONAL CONTROLS AS DIRECTED BY PERMITTING AGENCY OR OWNER.
5. SITE MAP MUST CLEARLY DELINEATE ALL STATE WATERS, PERMITS FOR ANY CONSTRUCTION ACTIVITY IMPACTING STATE WATER OR REGULATED WETLANDS MUST BE MAINTAINED ON SITE AT ALL TIMES.
6. CONTRACTOR SHALL MINIMIZE CLEARING TO THE MAXIMUM EXTENT PRACTICAL OR AS REQUIRED BY THE GENERAL PERMIT.
7. GENERAL CONTRACTOR SHALL DENOTE ON PLAN THE TEMPORARY PARKING AND STORAGE AREA WHICH SHALL ALSO BE USED AS THE EQUIPMENT MAINTENANCE AND CLEANING AREA, EMPLOYEE PARKING AREA, AND AREA FOR LOCATING PORTABLE FACILITIES, OFFICE TRAILERS, AND TOILET FACILITIES. CONTRACTOR SHALL CONSTRUCT TEMPORARY BERM ON DOWN STREAM SIDES.
8. ALL WASH WATER (CONCRETE TRUCKS, VEHICLE CLEANING, EQUIPMENT CLEANING, ETC.) SHALL BE DETAINED AND PROPERLY TREATED OR DISPOSED.
9. SUFFICIENT OIL AND GREASE ABSORBING MATERIALS AND FLOTATION BOOMS SHALL BE MAINTAINED ON SITE OR READILY AVAILABLE TO CONTAIN AND CLEAN-UP FUEL OR CHEMICAL SPILLS AND LEAKS.
10. DUST ON THE SITE SHALL BE CONTROLLED. THE USE OF MOTOR OILS AND OTHER PETROLEUM BASED OR TOXIC LIQUIDS FOR DUST SUPPRESSION OPERATIONS IS PROHIBITED.
11. RUBBISH, TRASH, GARBAGE, LITTER, OR OTHER SUCH MATERIALS SHALL BE DEPOSITED INTO SEALED CONTAINERS, MATERIALS SHALL BE PREVENTED FROM LEAVING THE PREMISES THROUGH THE ACTION OF WIND OR STORM WATER DISCHARGE INTO DRAINAGE DITCHES OR WATERS OF THE STATE.
12. ALL STORM WATER POLLUTION PREVENTION MEASURES PRESENTED ON THIS SITE MAP, AND IN THE STORM WATER POLLUTION PREVENTION PLAN, SHALL BE INITIATED AS SOON AS PRACTICABLE.
13. ALL DENUDED AREAS THAT WILL BE INACTIVE FOR 14 DAYS OR MORE, MUST BE STABILIZED TEMPORARY WITH THE USE OF FAST-GERMINATING ANNUAL GRASS/GRAIN VARIETIES, STRAW/HAY MULCH, WOOD CELLULOSE FIBERS, TACKIFIERS NETTING OR BLANKETS AS SHOWN ON SITE MAP.
14. DISTURBED PORTIONS OF THE SITE WHERE CONSTRUCTION ACTIVITY HAS PERMANENTLY STOPPED SHALL BE PERMANENTLY STABILIZED AS SHOWN ON THE PLANS. THESE AREAS SHALL BE SEEDED, SODDED, AND/OR VEGETATED NO LATER THAN 14 DAYS AFTER THE LAST CONSTRUCTION ACTIVITY OCCURRING IN THESE AREAS. REFER TO THE GRADING PLAN AND/OR LANDSCAPE PLAN.
15. IF THE ACTION OF VEHICLES TRAVELING OVER THE GRAVEL CONSTRUCTION ENTRANCES IS NOT SUFFICIENT TO REMOVE THE MAJORITY OF DIRT OR MUD, THEN THE TIRES MUST BE WASHED BEFORE THE VEHICLES ENTER A PUBLIC ROAD. IF WASHING IS USED,PROVISION MUST BE MADE TO INTERCEPT THE WASH WATER AND TRAP THE SEDIMENT BEFORE IT IS CARRIED OFF THE SITE ONLY USE INGRESS/ENGRESS LOCATIONS AS PROVIDED.
16. ALL MATERIALS SPILLED, DROPPED, WASHED, OR TRACKED FROM VEHICLES ONTO ROADWAY OR INTO STORM DRAINS MUST BE REMOVED IMMEDIATELY.
17. CONTRACTORS OR SUBCONTRACTORS WILL BE RESPONSIBLE FOR REMOVING SEDIMENT IN DETENTION POND AND ANY SEDIMENT THAT MAY HAVE COLLECTED IN THE STORM SEWER DRAINAGE SYSTEMS IN CONJUNCTION WITH THE STABILIZATION OF THE SITE.
18. ON-SITE AND OFF-SITE SOIL STOCKPILE AND BORROW AREAS SHALL BE PROTECTED FROM EROSION AND SEDIMENTATION THROUGH IMPLEMENTATION OF BEST MANAGEMENT PRACTICES. STOCKPILE AND BORROW AREA LOCATIONS SHALL BE NOTED ON THE SITE MAP AND PERMITTED IN ACCORDANCE WITH GENERAL PERMIT REQUIREMENTS.
19. SLOPES SHALL BE LEFT IN A ROUGHENED CONDITION DURING THE GRADING PHASE TO REDUCE RUNOFF VELOCITIES AND EROSION.
20. DUE TO THE GRADE CHANGES DURING THE DEVELOPMENT OF THE PROJECT, THE CONTRACTOR SHALL BE RESPONSIBLE FOR ADJUSTING THE EROSION AND SEDIMENT CONTROL MEASURES (SILT FENCES, ETC.) TO PREVENT EROSION AND POLLUTANT DISCHARGE.
21. GENERAL CONTRACTOR IS TO DESIGNATE/IDENTIFY AREAS ON THE SITE MAPS, INSIDE OF THE LIMITS OF DISTURBANCE, FOR WASTE DISPOSAL AND DELIVERY AND MATERIAL STORAGE.
22. CONTRACTOR SHALL BE RESPONSIBLE FOR PREPARING & SUBMITTING NOTICE OF INTENT(N.O.I.) & NOTICE OF TERMINATION (N.O.T.).
23. CONTRACTOR TO LIMIT DISTURBANCE OF SITE IN STRICT ACCORDANCE WITH EROSION CONTROL SEQUENCING SHOWN ON THIS PLAN. NO UNNECESSARY OR IMPROPERLY SEQUENCED CLEARING AND/OR GRADING SHALL BE PERMITTED.

BMP MAINTENANCE EROSION NOTES

ALL MEASURES STATED ON THIS SITE MAP, AND IN THE STORM WATER POLLUTION PREVENTION PLAN, SHALL BE MAINTAINED IN FULLY FUNCTIONAL CONDITION UNTIL NO LONGER REQUIRED FOR A COMPLETED PHASE OF WORK OR FINAL STABILIZATION OF THE SITE. ALL EROSION AND SEDIMENTATION CONTROL MEASURES SHALL BE CHECKED BY A QUALIFIED PERSON IN ACCORDANCE WITH THE CONTRACT DOCUMENTS OR THE APPLICABLE PERMIT, WHICHEVER IS MORE STRINGENT, AND REPAIRED IN ACCORDANCE WITH THE FOLLOWING:

1. INLET PROTECTION DEVICES AND BARRIERS SHALL BE REPAIRED OR REPLACED IF THEY SHOW SIGNS OF UNDERMINING OR DETERIORATION.
2. ALL SEEDED AREAS SHALL BE CHECKED REGULARLY TO SEE THAT A GOOD STAND IS MAINTAINED. AREAS SHOULD BE FERTILIZED, WATERED, AND RESEEDED AS NEEDED.
3. SILT FENCES SHALL BE REPAIRED TO THEIR ORIGINAL CONDITIONS IF DAMAGED. SEDIMENT SHALL DE REMOVED FROM THE SILT FENCES WHEN IT REACHES ONE-HALF THE HEIGHT OF THE SILT FENCE.
4. THE CONSTRUCTION EXITS SHALL BE MAINTAINED IN A CONDITION WHICH WILL PREVENT TRACKING OR FLOW OF MUD ONTO PUBLIC RIGHT-A-WAY. THIS MAY REQUIED PERIODIC TOP DRESSING OF THE CONSTRUCTION EXITS AS CONDITIONS DEMAND.
5. THE TEMPORARY PARKING AND STORAGE AREA SHALL BE KEPT IN GOOD CONDITION (SUITABLE FOR PARKING AND STORAGE). THIS MAY REQUIRE PERIODIC TOP DRESSING OF THE TEMPORARY PARKING AREA AS CONDITIONS DEMAND.
6. OUTLET STRUCTURES IN THE SEDIMENTATION BASINS SHALL BE MAINTAINED IN OPERATIONAL CONDITIONS AT ALL TIMES. SEDIMENT SHALL BE REMOVED FROM SEDIMENT BASINS OR TRAPS WHEN THE DESIGN CAPACITY HAS BEEN REDUCED BY 50%.
7. PRIOR TO LEAVING THE SITE, ALL VEHICLES SHALL BE CLEANED OF DEBRIS. ANY DEBRIS AND/OR SEDIMENT REACHING THE PUBLIC STREET SHALL BE CLEANED IMMEDIATELY BY A METHOD OTHER THAN FLUSHING.

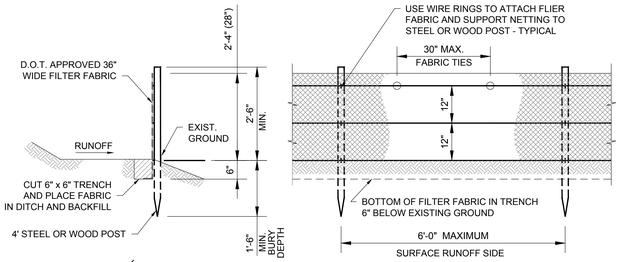

SILT FENCE DETAIL
NOT TO SCALE

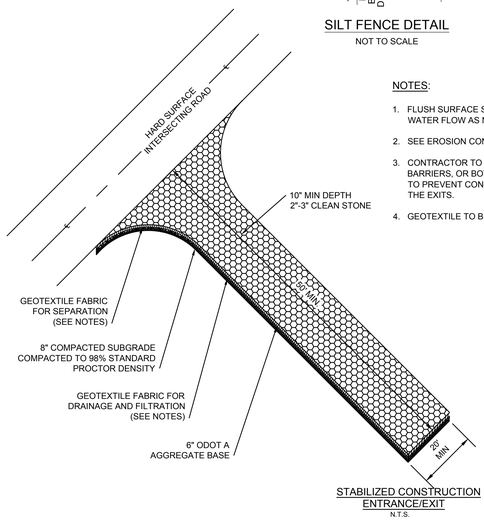

STABILIZED CONSTRUCTION ENTRANCE/EXIT
N.T.S.

NOTES:

1. FLUSH SURFACE STONE TOWARD SEDIMENT TRAP WITH HIGH VOLUME WATER FLOW AS NEEDED TO MAINTAIN CLEAN SURFACE STONE.
2. SEE EROSION CONTROL FOR LOCATION.
3. CONTRACTOR TO LOCATED TEMPORARY CONSTRUCTION FENCING, JERSEY BARRIERS, OR BOTH ALONG THE SIDES OF THE CONSTRUCTION EXITS TO PREVENT CONSTRUCTION TRAFFIC FROM SHORT CIRCUTING/BYPASSING THE EXITS.
4. GEOTEXTILE TO BE AASHTO M 288-97 CLASS-2

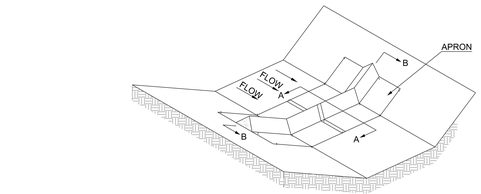

SILT DIKE UNIT
CUT SECTION

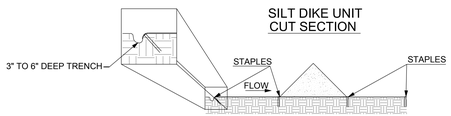

DETAIL A-A

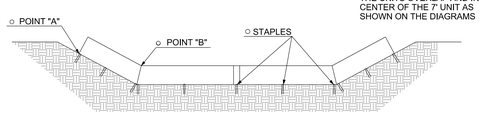

DIKE SECTION
DETAIL B-B

○ POINT "A" MUST BE HIGHER THAN POINT "B" TO ENSURE THAT WATER FLOWS OVER THE DIKE AND NOT ARROUNT THE ENDS.

TRIANGULAR SILT DIKE INSTALLATION
FOR
ROADWAY DITCH OR DRAINAGE DITCH
NOT TO SCALE

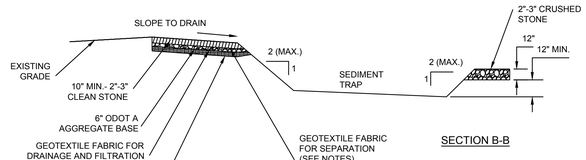

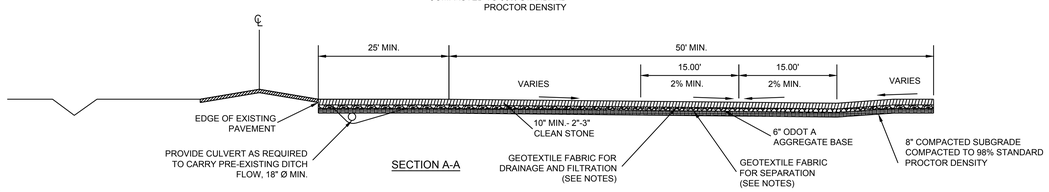

SECTION A-A

STABILIZED CONSTRUCTION EXIT
SCALE: N.T.S.

NOTES:

1. DROP INLET SEDIMENT BARRIERS ARE TO BE USED FOR SMALL, NEARLY LEVEL DRAINAGE AREAS. (LESS THAN 5%.)
2. USE 2X4 WOOD OR EQUIVALENT METAL STAKES, 3' MINIMUM LENGTH.
3. INSTALL 2X4 WOOD TOP FRAME TO INSURE STABILITY.
4. THE TOP OF THE FRAME (PONDING HEIGHT), MUST BE WELL BELOW THE GROUND ELEVATION DOWNSLOPE TO PREVENT RUNOFF FROM BY-PASSING THE INLET. A TEMPORARY DIKE MAY BE NECESSARY ON THE DOWNSLOPE SIDE OF THE STRUCTURE.

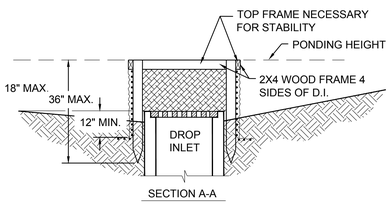

SECTION A-A

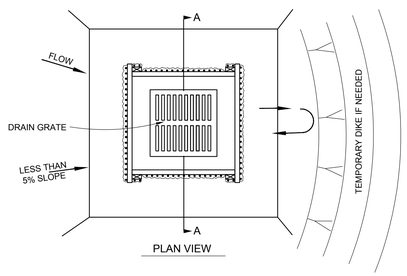

PLAN VIEW

James R. Childers Architect, Inc.
45 South 4th Street
Fort Smith, AR 72901
479-783-2480
www.childersarchitect.com

PROFESSIONAL SEAL:

REGISTERED PROFESSIONAL ENGINEER
H. WAYNE BARKER
11-1-19
18313
OKLAHOMA

CONSULTANT LOGO:

Barker
OKLAHOMA

Barker & Associates
3900 UNIVERSITY BLVD
Durant, OK 74701
580.931.9045
OK. CA. 3990
EXP. 06/30/2020

CLIENT:

THE CHEROKEE NATION
SEPT. 6, 1839

WILMA P. MANKILLER HEALTH CENTER EXPANSION

STILWELL, OKLAHOMA

KEY PLAN:

PROJECT PHASE:
BID PACKAGE 01

REVISIONS		
#	DATE	DESCRIPTION

DATE: 11.01.19
JOB NUMBER: 18-01.01
SHEET NUMBER: CE500

EROSION CONTROL DETAILS

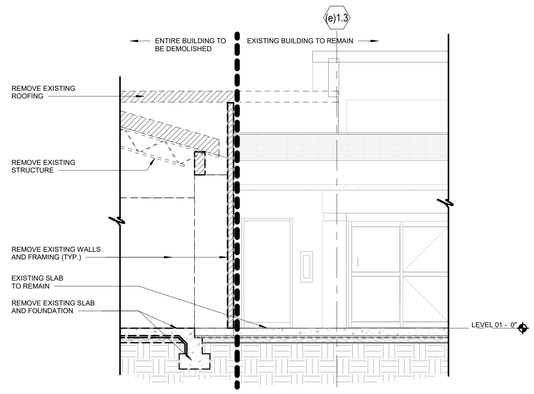

02 DEMOLITION SECTION
1/4" = 1'-0"

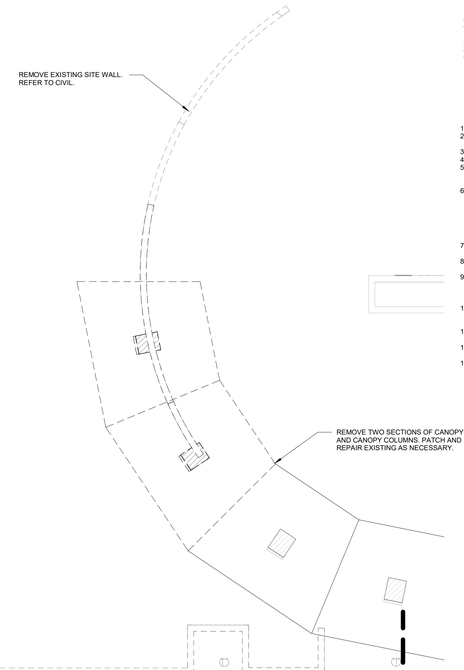

DEMOLITION LEGEND

- ITEMS SHOWN DASHED ARE TO BE REMOVED.
- ITEMS SHOWN SCREENED ARE TO REMAIN.
- ITEMS SHOWN SOLID ARE NEW CONSTRUCTION.

GENERAL DEMOLITION NOTES

1. ENTIRE BUILDING SHOWN IN DASHED LINE TO BE DEMOLISHED.
2. REFER TO SPECIFICATION DIVISION 02 FOR SPECIFIC PROJECT DEMOLITION REQUIREMENTS.
3. REFER TO DEMOLITION SYMBOL LEGEND ON DRAWINGS.
4. CONTRACTOR TO COORDINATE DEMOLITION WORK SEQUENCE.
5. DEMOLITION DRAWINGS REPRESENT EXISTING CONDITIONS BASED ON LIMITED EXISTING DRAWINGS AND SITE OBSERVATIONS. CONTRACTOR SHALL FIELD VERIFY ALL EXISTING BUILDING AND SITE CONDITIONS.
6. DEMOLITIONS DRAWINGS GENERALLY INDICATE EXISTING SCOPE OF WORK TO BE DEMOLISHED AND ARE NOT INTENDED TO LIMIT OR FULLY DEFINE THE SCOPE OF WORK TO BE REMOVED IN ORDER TO ACCOMPLISH SCOPE OF NEW CONSTRUCTION. WHERE THESE CONDITIONS OCCUR OUTSIDE OF THE DEMOLITION LIMITS, AREAS SHALL BE RETURNED TO THEIR ORIGINAL CONDITION AS PART OF THE NEW CONSTRUCTION SCOPE OF WORK.
7. CONTRACTOR SHALL NOTIFY ARCHITECT OF ANY CONFLICTS BETWEEN EXISTING CONSTRUCTION AND CONSTRUCTION DOCUMENTS.
8. REFERENCE STRUCTURAL, CIVIL, AND MEP DRAWINGS FOR OTHER DISCIPLINE DEMOLITION SCOPE OF WORK.
9. WHERE EXISTING WALL MOUNTED DEVICES, FIXTURES OR OTHER WALL MOUNTED ITEMS ARE SCHEDULED TO BE SALVAGED, REFERENCE CONSTRUCTION DRAWINGS FOR NEW LOCATIONS OR COORDINATE WITH OWNER FOR STORAGE LOCATION.
10. PARTITIONS SCHEDULED TO BE REMOVED; DEMOLITION SHOULD INCLUDE MISCELLANEOUS BRACING, TRACK, ETC. TO BOTTOM OF STRUCTURE.
11. CONTRACTOR SHALL MAINTAIN ALL REQUIRED EXITS UNOBSTRUCTED, ILLUMINATED AND PROTECTED FROM CONSTRUCTION ACTIVITIES.
12. CONTRACTOR TO CLEAN AREAS ADJACENT TO DEMOLITION AREA OF DUST, DIRT AND DEBRIS CAUSED BY DEMOLITIONS OPERATIONS. PROMPTLY DISPOSE OF DEMOLISHED MATERIALS. DO NOT ALLOW DEMOLISHED MATERIALS TO ACCUMULATE ON-SITE. TRANSPORT DEMOLISHED MATERIALS AND LEGALLY DISPOSE OF THEM.
13.

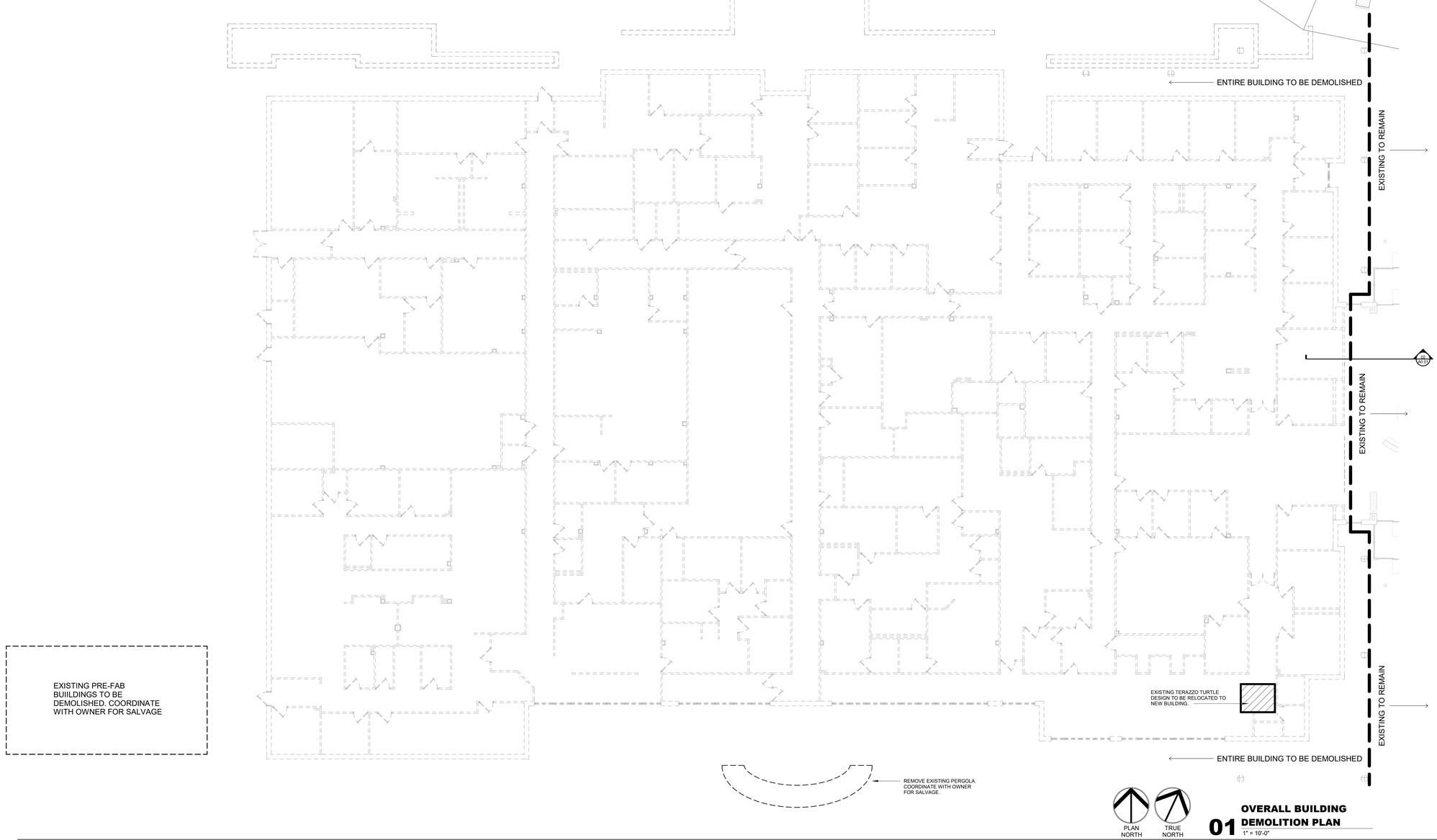

01 OVERALL BUILDING DEMOLITION PLAN
1" = 10'-0"

James R. Childers Architect, Inc.
45 South 4th Street
Fort Smith, AR 72901
479-783-2480
www.childersarchitect.com

PROFESSIONAL SEAL:

STATE OF OKLAHOMA — JAMES R. CHILDERS — REGISTERED ARCHITECT

11-01-2019

CONSULTANT LOGO:

CLIENT:

THE CHEROKEE NATION — SEAL OF — SEPT. 6, 1839

WILMA P. MANKILLER HEALTH CENTER EXPANSION
STILWELL, OKLAHOMA

KEY PLAN:

PROJECT PHASE:
BID PACKAGE 01

REVISIONS

#	DATE	DESCRIPTION

DATE:	JOB NUMBER:
11-01-19	18-01.01

SHEET NUMBER:
A0.01

OVERALL BUILDING DEMOLITION PLAN

STRUCTURAL GRAPHIC SYMBOLS

SECTION CROSS-REFERENCE SYMBOL

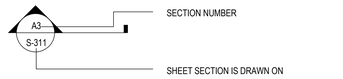

EXTERIOR ELEVATION CROSS-REFERENCE SYMBOL

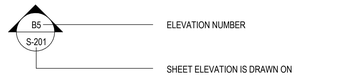

INTERIOR ELEVATION CROSS-REFERENCE SYMBOL

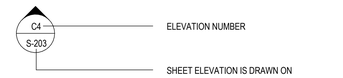

PLAN DETAIL CROSS-REFERENCE SYMBOL

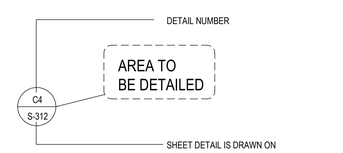

DETAIL CROSS-REFERENCE SYMBOL

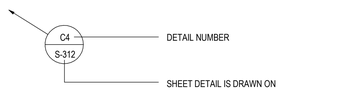

NORTH ARROW SYMBOL



KEYNOTE SYMBOL



ELEVATION TARGET SYMBOL

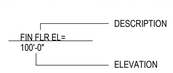

MATCH LINE SYMBOL

MATCH LINE
SEE SHEET XX/S-XXX

DRAWING TITLE SYMBOL

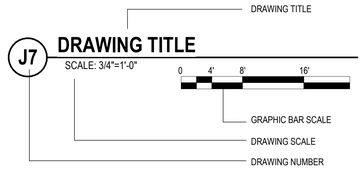

GRAPHIC BAR SCALE SYMBOL



STRUCTURAL GRID REFERENCE SYMBOL

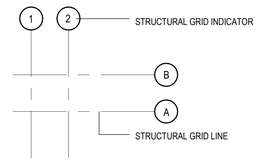

REVISION INDICATOR SYMBOL



BASE PLATE MARK SYMBOL



SPOT FOOTING MARK SYMBOL



CONTINUOUS FOOTING MARK SYMBOL



WALL MARK SYMBOL



MOMENT CONNECTION SYMBOL



SIDEPLATE MOMENT CONNECTION SYMBOL, SEE SIDEPLATE DRAWINGS

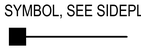

STRUCTURAL MATERIALS LEGEND

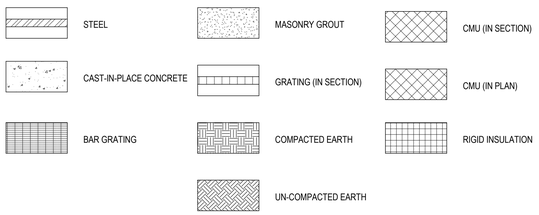

ABBREVIATIONS

A/E	ARCHITECT/ENGINEER
AB	ANCHOR BOLT
ABAN	ABANDON
ABBRV	ABBREVIATION
AC	ASPHALTIC CONCRETE
ACI	AMERICAN CONCRETE INSTITUTE
ACP	ASPHALTIC CONCRETE PAVING
ACR	ACROSS
ACST	ACOUSTIC
AD	AREA DRAIN
ADA	AMERICANS WITH DISABILITIES ACT
ADDL	ADDITIONAL
ADDM	ADDENDUM
ADJ	ADJACENT/ADJOINING
ADMIN	ADMINISTRATION
AFF	ABOVE FINISHED FLOOR
AFG	ABOVE FINISHED GRADE
AFS	ABOVE FINISHED SLAB
AGGR	AGGREGATE
AHR	ANCHOR
AIA	AMERICAN INSTITUTE OF ARCHITECTS
AISC	AMERICAN INSTITUTE OF STEEL CONSTRUCTION
AISI	AMERICAN IRON AND STEEL INSTITUTE
AITC	AMERICAN INSTITUTE OF TIMBER CONSTRUCTION
ALNMT	ALIGNMENT
ALT	ALTERNATE, ALTERNATIVE
ALUM	ALUMINUM
AMT	AMOUNT
ANSI	AMERICAN NATIONAL STANDARDS INSTITUTE
APA	AMERICAN PLYWOOD ASSOCIATION
APPD	APPROVED
APPROX	APPROXIMATE
APPX	APPENDIX
AR	AS REQUIRED
ARCH	ARCHITECT
ASCE	AMERICAN SOCIETY OF CIVIL ENGINEERS
ASPH	ASPHALT
ASI	ARCHITECT'S SUPPLEMENTAL INSTRUCTIONS
ASSN	ASSOCIATION
ASTM	AMERICAN SOCIETY FOR TESTING AND MATERIALS
ATCH	ATTACHMENT
ATTN	ATTENTION
AWS	AMERICAN WELDING SOCIETY
AZ	AZIMUTH
B&F	BELL AND FLANGE
BAL	BALANCE
B/B	BACK TO BACK
BC	BOTTOM CHORD
BD	BOARD
BDRY	BOUNDARY
BEV	BEVEL
BFF	BELOW FINISH FLOOR
BKG	BACKING
BKGD	BACKGROUND
BLD	BUILD
BLDG	BUILDING
BLK	BLOCK/BLOCKING
BLT	BUILT
BLVD	BOULEVARD
BLW	BELOW
BM	BEAM
BO	BOTTOM OF
BOS	BOTTOM OF STEEL
BOT	BOTTOM
B PL	BASE PLATE
BRCG	BRACING
BRDG	BRIDGING
BRG	BEARING
BRG PL	BEARING PLATE
BS	BOTH SIDES
BSMT	BASEMENT
BT WLD	BUTT WELD
BTWN	BETWEEN
C	CHANNEL
C/C	CENTER TO CENTER
CAM	CAMBER
CAN	CANOPY
CD	CONSTRUCTION DOCUMENTS, CONTRACT DOCUMENTS
CEM	CEMENT
CHFR	CHAMFER
CHKD	CHECKED/CHECKERED
CI	CAST IRON
CIP	CAST-IN-PLACE
CJ	CONSTRUCTION JOINT
CJ	CONTRACTION JOINT
CJ	CONTROL JOINT
CL	CENTER LINE
CLG	CEILING
CLR	CLEAR
cm	CENTIMETER
CMU	CONCRETE MASONRY UNIT
CO	COMPANY
COA	CITY OF ALBUQUERQUE
COL	COLUMN
COM	COMMON
CONC	CONCRETE
CONN	CONNECTION
CONSTR	CONSTRUCTION
CONT	CONTINUOUS , CONTINUE
CONTR	CONTRACTOR
COORD	COORDINATE
CRSI	CONCRETE REINFORCING STEEL INSTITUTE
CSI	CONSTRUCTION SPECIFICATIONS INSTITUTE
CTR	CENTER
CTRL	CONTROL
CU	CUBIC
CU YD	CUBIC YARD
D	DEEP, DEPTH
D-B	DESIGN-BUILD
DAT	DATUM
DBE	DECK BEARING ELEVATION
DBL	DOUBLE
DEG	DEGREE
DEL	DELETE
DEMO	DEMOLITION
DET	DETAIL
DEV	DEVELOPMENT
DFTG	DRAFTING
DIA	DIAMETER
DIAG	DIAGONAL
DIFF	DIFFERENCE, DIFFERENTIAL
DIM	DIMENSION
DIST	DISTANCE
DIV	DIVIDE
DJ	DOUBLE JOIST
DL	DEAD LOAD
DOC	DOCUMENT
DOUG FIR	DOUGLAS FIR
DSGN	DESIGN
DWG	DRAWING
DWL/DWLS	DOWELS
E	EAST, MODULUS OF ELASTICITY
EA	EACH
EE	EACH END
EF	EACH FACE
EIFS	EXTERIOR INSULATION AND FINISH SYSTEM
EJ	EXPANSION JOINT
EL	ELEVATION
ELAST	ELASTOMERIC
ELEC	ELECTRIC
ELEM	ELEMENTARY
ELEV	ELEVATOR
EMBED	EMBEDDED / EMBEDMENT
ENCL	ENCLOSURE
ENGR	ENGINEER
EOS	EDGE OF SLAB
EPA	ENVIRONMENTAL PROTECTION AGENCY
EQ	EQUAL
EQUIP	EQUIPMENT
EQUIV	EQUIVALENT
ESCAL	ESCALATOR
ESMT	EASEMENT
EST	ESTIMATE
ETC	ET CETERA

ABBREVIATIONS

EW	EACH WAY
EX	EXAMPLE
EXC	EXCAVATE
EXCL	EXCLUDE
EXIST	EXISTING
EXP	EXPANSION
EXT	EXTERIOR
F/F	FACE TO FACE
FAB	FABRIC
FACIL	FACILITY
FB	FLAT BAR
FD	FLOOR DRAIN
FDTN	FOUNDATION
FF	FAR FACE
FF EL	FINISH FLOOR ELEVATION
FIN GR	FINISH GRADE
FH	FLAT HEAD
FIN	FINISH
FIN FLR	FINISH FLOOR
FLG	FLANGE
FLR	FLOOR
FLR SK	FLOOR SINK
FOC	FACE OF CONCRETE
FOF	FACE OF FINISH
FOM	FACE OF MASONRY
FOS	FACE OF SLAB
FOS	FACE OF STUD
FOW	FACE OF WALL
FR	FRAME
FRMG	FRAMING
FS	FAR SIDE
FSTNR	FASTENER
FT	FOOT / FEET
FT/LB	FOOT/POUND
FT/LBF	FOOT/POUND FORCE
FTG	FOOTING
FUT	FUTURE
G	GIRDER
GA	GAGE
GALV	GALVANIZED
GALV STL	GALVANIZED STEEL
GR BM	GRADE BEAM
GC	GENERAL CONTRACTOR
GEN	GENERAL
GLU LAM	GLUED LAMINATED WOOD
GLZ	GLAZING
GOVT	GOVERNMENT
GRTG	GRATING
GT	GROUT
H	HIGH
HAS	HEADED ANCHOR STUD
HC	HOLLOW-CORE
HCP	HANDICAPPED
HD	HEAVY DUTY
HGR	HANGER
HLDN	HOLDDOWN
HORIZ	HORIZONTAL
HS	HIGH STRENGTH
HSKPG	HOUSEKEEPING
HSS	HOLLOW STRUCTURAL SECTIONS
HST	HOIST
HT	HEIGHT
IBC	INTERNATIONAL BUILDING CODE
ID	INSIDE DIAMETER
IF	INSIDE FACE
IFS	INSIDE FACE OF STUD
IN	INCH
INCL	INCLUDED
INFO	INFORMATION
IN-LB	INCH-POUND
IN-LBF	INCH-POUND FORCE
INSTL	INSTALL
INSUL	INSULATION
INT	INTERIOR
IR	INSIDE RADIUS
k	KIP
K	THOUSAND
KB	KNEE BRACE
KCJ	KEYED CONTROL JOINT
KIP	THOUSAND POUNDS
KIP FT	THOUSAND FOOT/POUNDS
KLF	KIPS PER LINEAL FOOT
KO	KNOCK OUT
KOP	KNOCK OUT PANEL
KSF	KIPS PER SQUARE FOOT
KSI	KIPS PER SQUARE INCH
L	ANGLE
LAM	LAMINATE
LATL	LATERAL
LBF	POUND-FORCE
LBR	LUMBER
LBS	POUND
LD BRG	LOAD BEARING
LF	LINEAR FEET (FOOT)
LIN	LINEAR
LL	LIVE LOAD
LLBB	LONG LEG BACK TO BACK
LLH	LONG LEG HORIZONTAL
LLV	LONG LEG VERTICAL
LONG	LONGITUDINAL
LT GA	LIGHT GAGE
LT WT	LIGHT WEIGHT
LVR	LOUVER
LWC	LIGHTWEIGHT CONCRETE
M	MOMENT
MAINT	MAINTENANCE
MATL	MATERIAL
MAX	MAXIMUM
MB	MACHINE BOLT
MC	MOMENT CONNECTION
MCJ	MASONRY CONTROL JOINT
MD	METAL DECK
ME	MECHANICAL ENGINEER
MECH	MECHANICAL
MEZZ	MEZZANINE
MFR	MANUFACTURER
MID	MIDDLE
MIN	MINIMUM
MISC	MISCELLANEOUS
ML	MICRO-LAMINATED
ML	MONOLITHIC
MO	MASONRY OPENING
MS	MACHINE SCREW
MSL	MEAN SEA LEVEL
MTL	METAL
N	NORTH
NA	NOT APPLICABLE
NF	NEAR FACE
NIC	NOT IN CONTRACT
NM	NEW MEXICO
NO	NUMBER
NOM	NOMINAL
NS	NEAR SIDE
NTS	NOT TO SCALE
O/O	OUT TO OUT
OA	OVERALL
OC	ON CENTER
OD	OUTSIDE DIAMETER
OF	OUTSIDE FACE
OFS	OUTSIDE FACE OF STUD
OPH	OPPOSITE HAND
OPNG	OPENING
OPP	OPPOSITE
OPT	OPTIONAL
OR	OUTSIDE RADIUS
PAR	PARALLEL, PARAPET
PART	PARTIAL
PC	PIECE, PORTLAND CEMENT
PCC	PRECAST CONCRETE
PCF	POUNDS PER CUBIC FOOT
PCI	PRECAST/PRESTRESSED CONCRETE INSTITUTE
PED	PEDESTAL
PEN	PENETRATE
PERIM	PERIMETER
PERP	PERPENDICULAR
PH	PHASE
PIL	PILASTER

ABBREVIATIONS

PL	PLATE
PLAT	PLATFORM
PLBG	PLUMBING
PLF	POUNDS PER LINEAR FOOT
PLM	PARALLAM
PLYWD	PLYWOOD
POS	POSITION
PP	PANEL POINT
PRCST	PRECAST
PREFAB	PREFABRICATE
PRELIM	PRELIMINARY
PREV	PREVIOUS
PSF	POUNDS PER SQUARE FOOT
PSI	POUNDS PER SQUARE INCH
PT	POST-TENSIONED
PT CONC	POST-TENSIONED CONCRETE
PTN	PARTITION
PVG	PAVING
QTY	QUANTITY
QUAD	QUADRANT
R	RADIUS, RISER
RC	REINFORCED CONCRETE
RD	ROAD, ROOF DRAIN
REC	RECESSED
REF	REFERENCE
REINF	REINFORCE/REINFORCEMENT
REPL	REPLACE
REQ	REQUIRE
REQD	REQUIRED
REV	REVISION
RGD INS	RIGID INSULATION
RFI	REQUEST FOR INFORMATION
RND	ROUND
RO	ROUGH OPENING
RT	RIGHT
RVL	REVEAL
S	SOUTH
SCHEM	SCHEMATIC
SCHED	SCHEDULE
SD	SHOP DRAWINGS
SDI	STEEL DECK INSTITUTE
SDL	SADDLE
SE	STRUCTURAL ENGINEER
SECT	SECTION
SF	SQUARE FEET (FOOT)
SHT	SHEET, SHAFT
SHTHG	SHEATHING
SIM	SIMILAR
SJI	STEEL JOIST INSTITUTE
SLNT	SEALANT
SM	SMOOTH
SP	SUMP PIT
SPA	SPACE/SPACES
SPEC	SPECIFICATION
SPRT	SUPPORT
SQ	SQUARE
SQ IN	SQUARE INCH
SQ YD	SQUARE YARD
SSPC	STRUCTURAL STEEL PAINTING COUNCIL
ST	STAIRS
STAG	STAGGERED
STD	STANDARD
STIF	STIFFENER
STIR	STIRRUP
STAG	STAGGERED
STD	STANDARD
STIF	STIFFENER
STIR	STIRRUP
STL	STEEL
STL LNTL	STEEL LINTEL
STL	JST STEEL JOIST
STL PL	STEEL PLATE
STL RF DK	STEEL ROOF DECK
STR	STRINGERS
STRUCT	STRUCTURAL
SUB	SUBSTITUTE
SUF	SUFFICIENT
SUP	SUPPLEMENTARY
SUPPL	SUPPLEMENT
SYM	SYMBOL
SYMM	SYMMETRICAL
SYS	SYSTEM
T	TREAD
T&B	TOP AND BOTTOM
T&G	TONGUE AND GROOVE
TAN	TANGENT
TB	THRU BOLT
TEMP	TEMPORARY
THD	THREAD
THK	THICKNESS
THRU	THROUGH
TJI	TRUSS JOIST INSTITUTE
TO	TOP OF
TOB	TOP OF BEAM
TOC	TOP OF CONCRETE
TOC FTG	TOP OF CONCRETE FOOTING
TOC WALL	TOP OF CONCRETE WALL
TOF	TOP OF FOOTING
TOG	TOP OF GRATE
TOJ	TOP OF JOIST
TOL	TOLERANCE
TOM	TOP OF MASONRY
TOP	TOP OF PARAPET
TOS	TOP OF SLAB
TOS	TOP OF STEEL
TOW	TOP OF WALL
TRANS	TRANSVERSE
TRNBKL	TURNBUCKLE
TYP	TYPICAL
UBC	UNIFORM BUILDING CODE
UNO	UNLESS NOTED OTHERWISE
VAR	VARIES
VERT	VERTICAL
VIF	VERIFY IN FIELD
VNR	VENEER
VR	VAPOR RETARDER
VRFY	VERIFY
W	WEST, WIDE
W/	WITH
W/O	WITHOUT
WBL	WOOD BLOCKING
WD	WOOD
WF	WIDE FLANGE
WF BM	WIDE FLANGE BEAM
WL	WIND LOAD
WLD	WELDED
WM	WIRE MESH
WP	WATERPROOFING
WSCT	WAINSCOT
WT	WEIGHT
WWF	WELDED WIRE FABRIC
WWM	WELDED WIRE MESH
X BRACE	CROSS BRACING
XXH	DOUBLE EXTRA HEAVY
YD	YARD

GENERAL FOUNDATION NOTES:

FOUNDATION NOTES

GENERAL:

A SUBSURFACE SOIL INVESTIGATION HAS BEEN MADE BY BUILDING AND EARTH, PROJECT NO. OK180172.

A REPORT OF THAT INVESTIGATION DATED AUGUST 30, 2018 IS AVAILABLE FOR VIEWING AT THE OFFICE OF THE ARCHITECT

THE FOUNDATION SYSTEM FOR THIS PROJECT IS SPREAD FOOTINGS OVER AGGREGATE PIERS / STONE COLUMNS FOR THE MAIN BUILDING. THE FOUNDATION SYSTEM FOR THE PRE-ENGINEERED METAL BUILDING IS SPREAD FOOTINGS OVER OVER-EXCAVATED SOILS AND COMPACTED STRUCTURAL FILL.

ADDITIONAL INFORMATION CONCERNING SPECIFIC SOIL CONDITIONS TO BE ENCOUNTERED IS AVAILABLE IN THE SOILS REPORTS AND SHALL BE REVIEWED BY THE CONTRACTOR.

FIELD OBSERVATION AND TESTS:

THE OWNER SHALL EMPLOY THE SERVICES OF A REGISTERED, LICENSED GEOTECHNICAL ENGINEER TO OBSERVE ALL CONTROLLED EARTHWORK. THE GEOTECHNICAL ENGINEER SHALL PROVIDE CONTINUOUS ON-SITE OBSERVATION BY EXPERIENCED PERSONNEL DURING CONSTRUCTION OF CONTROLLED EARTHWORK. THE CONTRACTOR SHALL NOTIFY THE GEOTECHNICAL ENGINEER AT LEAST TWO WORKING DAYS IN ADVANCE OF ANY FIELD OPERATIONS OF THE CONTROLLED EARTHWORK.

TESTS OF MATERIALS SHALL BE MADE AT THE FOLLOWING MINIMUM RATES. THE ON-SITE GEOTECHNICAL ENGINEER SHALL DETERMINE THE ACTUAL TESTING RATES:

ONE FIELD DENSITY TEST PER 2500 SQUARE FEET OF COMPACTED SUBGRADE, PRIOR TO PLACING STRUCTURAL FILL OR SLAB-ON-GRADE, WITH A MINIMUM OF 3 TESTS.

ONE FIELD DENSITY TEST PER 2500 SQUARE FEET OF STRUCTURAL FILL PLACED OR EACH HORIZONTAL LAYER OF STRUCTURAL FILL, WHICHEVER IS GREATER.

ONE MOISTURE-DENSITY CURVE FOR EACH TYPE OF MATERIAL USED, AS INDICATED BY THE SIEVE ANALYSIS AND THE PLASTICITY INDEX.

THE GEOTECHNICAL ENGINEER SHALL SUBMIT THE RESULTS OF ALL REQUIRED TESTS.

CLEARING AND GRUBBING:

ALL EXISTING STRUCTURE AND PAVEMENT SHALL BE REMOVED FROM THE PROPOSED CONSTRUCTION AREA PRIOR TO ANY FILL PLACEMENT OR NEW CONSTRUCTION. SOILS DISTURBED DURING THIS PROCESS SHALL BE UNDERCUT AND REPLACED WITH STRUCTURAL FILL.

REMOVE ALL TREES, VEGETATION, ROOTS, TOPSOIL, AND OTHER DELETERIOUS MATERIALS SHALL BE REMOVED FROM THE PROPOSED CONSTRUCTION AREAS. ANY DESICCATED CLAYS ENCOUNTERED SHALL BE UNDERCUT AND REPLACED WITH STRUCTURAL FILL.

DURING SITE CLEARING AND PREPARATION THE CONTRACTOR SHALL IDENTIFY BORROW SOURCE MATERIALS THAT WILL BE USED AS STRUCTURAL FILL AND PROVIDE SAMPLES TO THE TESTING LABORATORY SO THAT CONFORMANCE TO THE STRUCTURAL FILL REQUIREMENTS CAN BE DETERMINED.

SITE, SUBFLOOR AND BEARING SURFACE PREPARATION:

A REPRESENTATIVE OF THE GEOTECHNICAL ENGINEER SHALL BE PRESENT TO CONFIRM COMPLETE EXCAVATION OF ANY UNCONTROLLED FILL OF THE MAIN BUILDING.

AGGREGATE PIERS/STONE COLUMN GROUND IMPROVEMENT IS REQUIRED UNDER COLUMN FOOTINGS AND CONTINUOUS WALL FOOTINGS OF THE MAIN BUILDING.

OVER-EXCAVATE AND REPLACE SOIL BELOW THE PRE-ENGINEERED METAL BUILDING FOUNDATION WITH 3 FEET OF LOW VOLUME CHANGE STRUCTURAL FILL.

SCARIFY ALL EXPOSED SUBGRADE SOILS TO A DEPTH OF 12 INCHES, MOISTEN TO OPTIMUM MOISTURE CONTENT (+/- 2%) AND COMPACT TO THE DENSITY SPECIFIED HEREINAFTER.

PLACE ALL STRUCTURAL FILL IN APPROXIMATELY HORIZONTAL LAYERS NOT GREATER THAN 8 INCHES IN LOOSE THICKNESS, MOISTEN TO OPTIMUM MOISTURE CONTENT (+/- 2%) AND COMPACT TO DENSITY SPECIFIED HEREINAFTER.

ALL EARTHWORK FOR THE BUILDING PAD SHALL EXTEND A MINIMUM OF 5 FEET BEYOND THE PERIMETER FOOTINGS.

STRUCTURAL FILL REQUIREMENTS:

GRADATION (ASTM D422):

SIEVE SIZE	PERCENT PASSING BY WEIGHT
3"	100
NO. 200	>15

PLASTICITY INDEX (ASTM D4318): 17 MAXIMUM
LIQUID LIMIT (ASTM D4318): 39 MAXIMUM

MATERIAL LARGER THAN 3 INCHES SHALL NOT BE PLACED IN THE STRUCTURAL FILL.

NO BRUSH, SOD, FROZEN MATERIAL OR OTHER UNSUITABLE MATERIAL SHALL BE PLACED IN THE STRUCTURAL FILL. MATERIAL SHALL BE PLACED IN SUCH A MANNER AS TO RESULT IN A UNIFORMLY COMPACTED FILL.

THE ONSITE FILL MATERIALS AND RESIDUAL SOILS ARE **NOT SUITABLE** FOR USE AS STRUCTURAL FILL WITHIN THE BUILDING AREA, WITHIN 5 FEET OF THE BUILDING PERIMETER.

IMPORTED FILL SHALL BE USED FOR THE LOWER PLASTICITY STRUCTURAL FILL. IT IS THE RESPONSIBILITY OF THE CONTRACTOR TO DETERMINE THE MOST APPROPRIATE METHOD TO OBTAIN AND PROVIDE THE REQUIRED STRUCTURAL FILL TO THE PROJECT.

GRANULAR BASE COURSE REQUIREMENTS:

#57 STONE.

COMPACTION REQUIREMENTS:

IN ACCORDANCE WITH ASTM D698 (STANDARD PROCTOR), SUBGRADE SOILS AND STRUCTURAL FILL MATERIALS SHALL BE COMPACTED TO THE FOLLOWING PERCENTAGES OF THE MAXIMUM DRY DENSITY AT +/- 2% OPTIMUM MOISTURE CONTENT:

MATERIAL	MINIMUM PERCENT COMPACTION
STRUCTURAL FILL IN THE BUILDING AREA	95
SUBBASE FOR SLAB SUPPORT	95
SUBGRADE BELOW STRUCTURAL FILL	95
MISCELLANEOUS BACKFILL	95

SITE RETAINING WALL DESIGN CRITERIA:

LOADING CONDITION	EQUIVALENT FLUID PRESSURE
ACTIVE EARTH PRESSURE	40 PCF
PASSIVE EARTH PRESSURE	250 PCF
EARTH PRESSURE AT REST	60 PCF
SOIL FRICTION FACTOR	0.35
SOIL BEARING CAPACITY	6000 PSF (GROUND IMPROVEMENT)

AGGREGATE PIERS / STONE COLUMNS:

AGGREGATE PIERS / STONE COLUMNS SHALL BE DESIGNED AND INSTALLED TO PROVIDE AN EQUIVALENT SOIL BEARING PRESSURE OF 6000 PSF AT MAIN BUILDING FOOTINGS.

DESIGN LOADS CAN EITHER BE DETERMINED BY THE SIZE OF THE FOOTINGS INDICATED ON THE DRAWINGS OR BY CONTACTING THE ENGINEER DIRECTLY.

SEISMIC OR WIND UPLIFT LOADS SHOWN ON THE DRAWINGS MUST BE RESISTED BY THE AGGREGATE PIERS / STONE COLUMNS WITH AN EMBEDDED ELEMENT PROVIDING POSITIVE ATTACHMENT TO FOOTINGS.

PORTIONS OF THE BUILDING AREA ALONG THE SOUTH AND WEST COULD ENCOUNTER AUGER REFUSAL MATERIAL (LIMESTONE) WITHIN 1 TO 2 FEET BELOW THE FOOTING BEARING ELEVATION. INSTALLATION OF AGGREGATE PIERS IS NOT PRACTICAL AT THESE LOCATIONS. FOR THESE LOCATIONS THE FILL RESIDUAL SOILS SHALL BE UNDERCUT TO THE TOP OF THE LIMESTONE UNIT. A GEOTECHNICAL REPRESENTATIVE SHALL EVALUATE THE CONDITION OF THE EXPOSED BEARING MATERIALS IN THE BOTTOM OF THE FOUNDATION EXCAVATION AT THE UNDERCUT LEVEL. AFTER COMPLETION OF THE RECOMMENDED UNDERCUTTING AND EVALUATION BY THE GEOTECHNICAL REPRESENTATIVE, THE FOOTING EXCAVATIONS CAN BE BROUGHT BACK UP TO DESIGN BEARING ELEVATION USING LEAN CONCRETE OR COMPACTED GRADED BASE. THE AGGREGATE BASE MUST BE PLACED IN LIFTS NOT EXCEEDING 6 INCHES IN LOOSE THICKNESS AND COMPACTED TO AT LEAST 98 PERCENT OF THE MATERIAL'S STANDARD PROCTOR MAXIMUM DRY DENSITY.

James R. Childers Architect, Inc.
45 South 4th Street
Fort Smith, AR 72901
479-783-2480
www.childersarchitect.com

PROFESSIONAL SEAL:

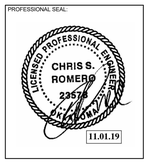

CONSULTANT LOGO:

Chavez-Grieves
consulting engineers, inc.
4700 Lincoln Road NE, Suite 102 Albuquerque, NM 87109
505-344-4080 505-343-8729 (fax)

CLIENT:

THE CHEROKEE NATION
1839 SEPT. 6, 1839

WILMA P. MANKILLER HEALTH CENTER EXPANSION

STILWELL, OKLAHOMA

KEY PLAN:

PROJECT PHASE:

BID PACKAGE 01

REVISIONS

#	DATE	DESCRIPTION

DATE: 11-01-19
JOB NUMBER: 18-01.01
SHEET NUMBER: S0.01

ABBREVIATIONS AND LEGENDS

GENERAL STRUCTURAL NOTES

CODES AND MANUALS:

IBC-15 INTERNATIONAL BUILDING CODE 2015
ASCE/SEI 3-91 STRUCTURAL DESIGN OF COMPOSITE SLABS
ASCE/SEI 7-10 MINIMUM DESIGN LOADS FOR BUILDINGS AND OTHER STRUCTURES
AISC 360-10 SPECIFICATION FOR STRUCTURAL STEEL BUILDINGS
AISC 341-10 SEISMIC PROVISIONS FOR STRUCTURAL STEEL BUILDINGS
AISC MANUAL OF STEEL CONSTRUCTION 14TH EDITION
SJI-K-1.1-10 STANDARD SPECIFICATION FOR OPEN WEB STEEL JOISTS, K-SERIES
SJI-LH/DLH-1.1-10 STANDARD SPECIFICATION FOR LONGSPAN STEEL JOISTS, LH-SERIES AND DEEP LONGSPAN STEEL JOISTS, DLH-SERIES
SJI-JG-1.1-10 STANDARD SPECIFICATION FOR JOIST GIRDERS
SJI-CJ-1.0-10 STANDARD SPECIFICATION FOR COMPOSITE STEEL JOIST, CJ-SERIES
SDI DIAPHRAGM DESIGN MANUAL, 3RD EDITION
ANSI/SDI NC1.0-06 STANDARD FOR NONCOMPOSITE STEEL FLOOR DECK
ANSI/SDI RD1.0-06 STANDARD FOR STEEL ROOF DECK
ANSI/SDI C1.0-06 STANDARD FOR COMPOSITE STEEL FLOOR DECK
AISI S100-12 NORTH AMERICAN SPECIFICATION FOR THE DESIGN OF COLD-FORMED STEEL STRUCTURAL MEMBERS
AISI S200-12 NORTH AMERICAN STANDARD FOR COLD-FORMED STEEL FRAMING – GENERAL PROVISIONS
AISI S210-12 NORTH AMERICAN STANDARD FOR COLD-FORMED STEEL FRAMING – FLOOR AND ROOF SYSTEM DESIGN
AISI S211-07 NORTH AMERICAN STANDARD FOR COLD-FORMED STEEL FRAMING – WALL STUD DESIGN WITH 2012 SUPPLEMENT
AISI S212-12 NORTH AMERICAN STANDARD FOR COLD-FORMED STEEL FRAMING – HEADER DESIGN
AISI S213-12 NORTH AMERICAN STANDARD FOR COLD-FORMED STEEL FRAMING – LATERAL DESIGN WITH 2010 SUPPLEMENT
AISI S214-12 NORTH AMERICAN STANDARD FOR COLD-FORMED STEEL FRAMING – TRUSS DESIGN, WITH SUPPLEMENT 2, DATED 2008
MBMA METAL BUILDING SYSTEMS MANUAL, 2007 EDITION
ACI 318-14 BUILDING CODE REQUIREMENTS FOR STRUCTURAL CONCRETE
PCI DESIGN HANDBOOK – MANUAL 120, 7TH EDITION
ACI 530-13 BUILDING CODE REQUIREMENTS FOR MASONRY STRUCTURES
ACI 530.1-13 SPECIFICATIONS FOR MASONRY STRUCTURES
AWS D1.1-04 STRUCTURAL WELDING CODE – STEEL
AWS D1.3-98 STRUCTURAL WELDING CODE – SHEET STEEL
AWS D1.4-11 STRUCTURAL WELDING CODE – REINFORCING STEEL

DESIGN CRITERIA:

VERTICAL:

LIVE LOAD	
FLOOR	65 PSF
STAIRS AND EXIT-WAYS*	100 PSF
*MINIMUM CONCENTRATED LOAD	300 LBS
ADDITIONAL SUPERIMPOSED LOADS	
PARTITIONS	15 PSF
SUSPENDED EQUIPMENT	10 PSF
CONCENTRATED LOAD (PER IBC 1607.4)	2000 LBS
ROOF LIVE LOAD: LR = 20*R1*R2	20 PSF
REDUCTION FACTOR BASED ON TRIB AREA	R1=1.0
REDUCTION FACTOR BASED ON ROOF SLOPE	R2=1.0
SNOW LOAD	
GROUND SNOW LOAD	PG=10 PSF
FLAT ROOF SNOW LOAD**	PF=12 PSF
SNOW EXPOSURE FACTOR	CE=1.0
SNOW LOAD IMPORTANCE FACTOR	IS=1.0
THERMAL FACTOR	CT=1.0
**INCLUDES 5 PSF RAIN-ON SNOW SURCHARGE LOAD	

HORIZONTAL:

WIND	
ULTIMATE DESIGN WIND SPEED	115 MPH
RISK CATEGORY	II
EXPOSURE	C
INTERNAL PRESSURE COEFFICIENT	GCPI=0.18
NATURAL FREQUENCY	0.685
STRUCTURE IS FLEXIBLE	
SEISMIC	
SEISMIC IMPORTANCE FACTOR	IS = 1.0
MAPPED SPECTRAL RESPONSE ACCELERATIONS	
SHORT PERIOD	SS=0.161G
1 SECOND PERIOD	S1=0.086G
SITE CLASS	C
SPECTRAL RESPONSE COEFFICIENTS	
SHORT PERIOD	SDS=0.129G
1 SECOND PERIOD	SD1=0.097G
SEISMIC DESIGN CATEGORY	C
BASIC SEISMIC FORCE RESISTING SYSTEM: STRUCTURAL STEEL SYSTEMS	
STEEL SYSTEM NOT SPECIFICALLY DETAILED FOR SEISMIC RESISTANCE	
SEISMIC RESPONSE COEFFICIENT	CS=0.043
RESPONSE MODIFICATION FACTOR	R = 3
DESIGN BASE SHEAR	V = 0.043W
ANALYSIS PROCEDURE: EQUIVALENT LATERAL FORCE	
BASIC SEISMIC FORCE RESISTING SYSTEM: REINFORCED MASONRY SYSTEMS	
INTERMEDIATE REINFORCED MASONRY SHEAR WALLS	
SEISMIC RESPONSE COEFFICIENT	CS=0.037
RESPONSE MODIFICATION FACTOR	R = 3 1/2
DESIGN BASE SHEAR	V = 0.037W
ANALYSIS PROCEDURE: EQUIVALENT LATERAL FORCE	
ALLOWABLE SOIL BEARING PRESSURE = (STONE COLUMNS REQUIRED TO ACHIEVE BEARING PRESSURE)	6000 PSF
FROST DEPTH =	24 INCHES
FUTURE BUILDING EXPANSION:	NONE

GENERAL:

STRUCTURAL DRAWINGS ARE NOT STAND-ALONE DOCUMENTS AND ARE INTENDED TO BE USED IN CONJUNCTION WITH CIVIL, ARCHITECTURAL, MECHANICAL, ELECTRICAL, AND DRAWINGS FROM OTHER DISCIPLINES. THE CONTRACTOR SHALL COORDINATE ALL REQUIREMENTS OF THE CONTRACT DOCUMENTS INTO THE SHOP DRAWINGS AND FIELD WORK.

COORDINATE DIMENSIONS OF ALL OPENINGS, DEPRESSIONS, BLOCKOUTS, ETC. WITH ARCHITECTURAL DRAWINGS, DRAWINGS FROM OTHER DISCIPLINES, PROJECT SHOP DRAWINGS, AND FIELD CONDITIONS PRIOR TO SHOP DRAWING SUBMITTAL. THE STRUCTURAL DRAWINGS ONLY REPRESENT A PORTION OF THE REQUIREMENTS FOR THE PROJECT.

SEE ARCHITECTURAL PLANS FOR INTERIOR NON-BEARING PARTITION WALLS. PARTITION FRAMING SHALL BE CONNECTED TO THE PRIMARY STRUCTURE TO ALLOW FOR VERTICAL LIVE LOAD DEFLECTIONS OF SPAN/360 FOR FLOOR FRAMING AND SPAN/240 FOR ROOF FRAMING.

CONTRACTOR'S CONSTRUCTION AND/OR ERECTION SEQUENCES SHALL RECOGNIZE AND CONSIDER THE EFFECTS OF THERMAL MOVEMENTS OF STRUCTURAL ELEMENTS DURING THE CONSTRUCTION PERIOD.

THE CONTRACTOR SHALL VERIFY ALL DIMENSIONS IN THE FIELD.

SHOP DRAWINGS SHALL BE FURNISHED AND REVIEWED BEFORE ANY FABRICATION OR ERECTION IS STARTED. THE CONTRACTOR SHALL REVIEW AND APPROVE SHOP DRAWINGS PRIOR TO SUBMITTAL TO THE ARCHITECT FOR REVIEW. POORLY EXECUTED SHOP DRAWINGS WILL BE REJECTED AND SHALL BE RESUBMITTED.

THE CONTRACTOR SHALL BE RESPONSIBLE FOR PROVIDING SAFE AND ADEQUATE SHORING FOR ALL PARTS OF THE STRUCTURE DURING CONSTRUCTION.

TEMPORARY PROVISIONS SHALL BE MADE FOR STRUCTURAL STABILITY DURING CONSTRUCTION. THE STRUCTURE SHOWN ON THE DRAWINGS HAS BEEN DESIGNED FOR STABILITY UNDER FINAL CONFIGURATION.

NOTCHING OR CUTTING ANY STRUCTURAL MEMBER IN THE FIELD IS PROHIBITED.

THE CONTRACTOR SHALL VERIFY THE SIZE AND LOCATION OF FOUNDATIONS UNDER MECHANICAL AND ELECTRICAL EQUIPMENT AS REQUIRED. NO CONCRETE PADS SHALL BE LOCATED ON ROOF UNLESS SHOWN ON THE STRUCTURAL DRAWINGS.

BACKFILL SHALL NOT BE PLACED BEHIND RETAINING WALLS UNTIL CONCRETE HAS ATTAINED 100 PERCENT OF DESIGN STRENGTH.

BACKFILL SHALL NOT BE PLACED BEHIND BASEMENT WALLS UNTIL THE CONCRETE HAS ATTAINED 100 PERCENT OF DESIGN STRENGTH AND THE ELEVATED FLOOR PROVIDING LATERAL SUPPORT AT THE TOP OF THE WALL IS COMPLETELY CONSTRUCTED, OR TEMPORARY BRACING/SHORING OF THE WALL IS PROVIDED. DESIGN OF ANY TEMPORARY WALL BRACING/SHORING IS THE RESPONSIBILITY OF THE CONTRACTOR.

REMOVAL OF FORMS AND SHORING SHALL BE IN ACCORDANCE WITH ACI 347. WHERE CONCRETE MUST SUPPORT SUPERIMPOSED LOADS PRIOR TO ATTAINING THE SPECIFIED DESIGN STRENGTH, RESHORE CONCRETE IN ACCORDANCE WITH ACI 347. RESHORING SHALL NOT BE REMOVED SOONER THAN 28 DAYS FROM THE DATE OF POUR OR UNTIL CONCRETE HAS ATTAINED THE SPECIFIED DESIGN STRENGTH.

THE CONTRACTOR SHALL SUBMIT FOR PRIOR APPROVAL THE END OF POUR LOCATIONS FOR CONCRETE GRADE BEAMS, CONCRETE COLUMNS, AND CONCRETE BEAMS.

GENERAL STRUCTURAL NOTES

THE CONTRACTOR SHALL BE RESPONSIBLE FOR ADHERING TO ALL APPLICABLE STANDARDS SET FORTH BY OSHA, INCLUDING THE FOLLOWING REQUIREMENTS FROM STANDARDS - 29 CFR, SECTION 1926, SUBPART R:

A. THE STEEL ERECTION CONTRACTOR SHALL NOT ERECT STEEL UNLESS THEY HAVE RECEIVED WRITTEN NOTIFICATION FROM THE CONTRACTOR THAT THE CONCRETE IN THE FOOTINGS, PIERS AND WALLS OR THE MORTAR IN THE MASONRY PIERS AND WALLS HAS ATTAINED, ON THE BASIS OF AN APPROPRIATE ASTM STANDARD TEST METHOD OF FIELD-CURED SAMPLES, EITHER 75 PERCENT OF THE INTENDED MINIMUM COMPRESSIVE DESIGN STRENGTH OR SUFFICIENT STRENGTH TO SUPPORT THE LOADS IMPOSED DURING STEEL ERECTION.

   PROVIDE STRUCTURAL ENGINEER A COPY OF WRITTEN NOTIFICATION WHEN IT IS PROVIDED TO THE STEEL ERECTOR.

B. ANCHOR RODS (ANCHOR BOLTS) SHALL NOT BE REPAIRED, REPLACED OR FIELD-MODIFIED WITHOUT THE APPROVAL OF THE PROJECT STRUCTURAL ENGINEER OF RECORD.

   PRIOR TO ERECTION OF COLUMNS, THE CONTRACTOR SHALL PROVIDE WRITTEN NOTIFICATION TO THE STEEL ERECTOR IF THERE HAS BEEN ANY REPAIR, REPLACEMENT OR MODIFICATION OF THE ANCHOR RODS (ANCHOR BOLTS).

   PROVIDE STRUCTURAL ENGINEER A COPY OF WRITTEN NOTIFICATION WHEN IT IS PROVIDED TO THE STEEL ERECTOR.

C. NO MODIFICATION THAT AFFECTS THE STRENGTH OF A STEEL JOIST OR STEEL JOIST GIRDER SHALL BE MADE WITHOUT THE APPROVAL OF THE PROJECT STRUCTURAL ENGINEER OF RECORD.

D. METAL DECKING HOLES AND OPENINGS SHALL NOT BE CUT UNTIL IMMEDIATELY PRIOR TO BEING PERMANENTLY FILLED WITH THE EQUIPMENT OR STRUCTURE, OR SHALL BE IMMEDIATELY COVERED.

PROTECTION: PROPER PRECAUTIONS SHALL BE TAKEN AT ALL TIMES TO PROTECT VEHICULAR AND PEDESTRIAN TRAFFIC FROM ANY DAMAGE OR INJURY WHICH MAY BE CAUSED, EITHER DIRECTLY OR INDIRECTLY, BY THE WORK INCLUDED ON THESE DRAWINGS. SUCH PRECAUTIONS SHALL INCLUDE THE ERECTION AND MAINTENANCE OF FENCES, BARRICADES, RAILINGS, GUARDS, SIGNS, COVERINGS, LIGHTS, AND OTHER PRECAUTIONS AS MAY BE REQUIRED. IF AT ANY TIME, IN THE OPINION OF THE OWNER OR THE OWNER'S REPRESENTATIVE, PROPER PRECAUTIONS ARE NOT BEING TAKEN TO SECURE THIS PROTECTION, THE CONTRACTOR SHALL AT NO ADDITIONAL COST TO THE OWNER, INSTALL AND MAINTAIN SUCH ADDITIONAL PROTECTION AS MAY BE DIRECTED BY THE OWNER.

POLLUTION CONTROLS: USE WATER SPRINKLING, TEMPORARY ENCLOSURES, AND OTHER SUITABLE METHODS TO LIMIT DUST AND DIRT RISING AND SCATTERING IN THE AIR TO LOWEST PRACTICAL LEVEL. COMPLY WITH GOVERNING REGULATIONS PERTAINING TO ENVIRONMENTAL PROTECTION.

TYPICAL DETAIL SHEETS:

THE S7.00 SERIES SHEETS IN THESE DRAWINGS CONTAIN TYPICAL STRUCTURAL DETAILS FOR VARIOUS BUILDING MATERIALS. SOME OF THESE DETAILS MAY NOT BE PART OF THIS PROJECT.

DRAWINGS:

DO NOT SCALE DRAWINGS.

WHERE DISCREPANCIES OCCUR BETWEEN PLANS, DETAILS, GENERAL NOTES, AND SPECIFICATIONS, THE MORE STRINGENT REQUIREMENTS SHALL GOVERN. DETAILS ON DRAWINGS TAKE PRECEDENCE OVER GENERAL NOTES AND TYPICAL DETAILS. DETAILS NOTED "TYPICAL" APPLY TO ALL SIMILAR CONDITIONS. WHERE NO SPECIFIC DETAILS ARE SHOWN, CONSTRUCTION SHALL CONFORM TO SIMILAR WORK ELSEWHERE ON THE PROJECT.

CAST-IN-PLACE CONCRETE:

ALL CONCRETE SHALL CONFORM TO THE SPECIFICATIONS FOR STRUCTURAL CONCRETE, ACI 301-10.

ALL EXPOSED EDGES OF CONCRETE SHALL HAVE A 3/4" CHAMFER UNLESS NOTED OTHERWISE.

NORMALWEIGHT CONCRETE:

A. F'C = 4500 PSI @ 28 DAYS – ALL CONCRETE EXPOSED TO FREEZE/THAW CYCLES AND OCCASIONAL MOISTURE, INCLUDING CONCRETE FLAT WORK, EXPOSED BUILDING STEM WALLS, SITE WALLS, ETC… EXTERIOR CONCRETE SHALL MEET EXPOSURE CATEGORY AND CLASS F1 ACCORDING TO ACI 318 TABLE 19.3.1.1.
B. F'C = 3000 PSI @ 28 DAYS - ALL INTERIOR CONCRETE (I.E. FOOTINGS, PEDESTALS, TIE BEAMS, GRADE BEAMS, RETAINING WALLS, ETC.).
C. F'C = 3000 PSI @ 28 DAYS - ALL INTERIOR SLABS ON GRADE, UNLESS NOTED OTHERWISE.
D. F'C = 3500 PSI @ 28 DAYS - ALL CONCRETE FILL OVER METAL DECK, UNLESS NOTED OTHERWISE.

CONCRETE MIX DESIGNS (INCLUDING AIR CONTENT, WATER TO CEMENT RATIOS, AND OTHER CRITERIA) SHALL CONFORM TO THE REQUIREMENTS SET FORTH IN ACI 318 TABLE 4.3.1, BASED ON THE EXPOSURE CATEGORIES AND CLASSES DEFINED IN ACI 318 TABLE 4.2.1. USE AIR ENTRAINING ADMIXTURE IN ALL EXTERIOR CONCRETE. AIR CONTENT IN FIRE RATED SLABS SHALL ALSO COMPLY WITH THE REQUIREMENTS IN THE SPECIFIED UL LISTING.

COLD WEATHER CONCRETING: PROTECT CONCRETE WORK FROM PHYSICAL DAMAGE OR REDUCED STRENGTH CAUSED BY FROST, FREEZING OR LOW TEMPERATURES. COMPLY WITH ACI 306.1.

HOT WEATHER CONCRETING: WHEN HOT WEATHER CONDITIONS EXIST THAT WOULD IMPAIR THE QUALITY AND STRENGTH OF THE CONCRETE, REDUCE DELIVERY TIME OF READY MIX CONCRETE, LOWER THE TEMPERATURE OF MATERIALS, OR ADD RETARDER TO ENSURE THAT THE CONCRETE IS PLASTIC. RETEMPERING WITH WATER IS NOT ALLOWED. COMPLY WITH ACI 305R.

SLAB CURING: ALL INTERIOR CONCRETE SLABS, EXCEPT EXPOSED INTEGRALLY COLORED SLABS, ARE TO BE CURED WITH A MOISTURE RETAINING COVER FOR THE FIRST 7 DAYS (MINIMUM) AFTER PLACEMENT.

THE CONTRACTOR IS ALLOWED TO CAST FOUNDATIONS AGAINST EXCAVATED SOIL SURFACES, PROVIDED THE FOLLOWING IS ADHERED TO:

A. THE SIDE SLOPES OF THE EXCAVATION SHALL BE ABLE TO MAINTAIN VERTICAL SLOPE WITHOUT SOIL SLOUGHAGE.
B. THE BOTTOM WIDTH OF THE EXCAVATION SHALL BE ONE INCH WIDER MINIMUM ON EACH SIDE THAN THE SPECIFIED FOOTING WIDTH.
C. THE SIDE WALLS OF THE EXCAVATION SHALL BE BATTERED A MINIMUM OF ONE INCH HORIZONTAL TO TWELVE INCHES VERTICAL.
D. IF SANDY OR LOOSE MATERIALS ARE ENCOUNTERED, THE FOOTING MUST BE FORMED.
E. THE CONTRACTOR SHALL BE RESPONSIBLE FOR REMOVAL OF ANY SOIL SLOUGHAGE FROM THE WET CONCRETE DURING THE CASTING OPERATION.
F. THE CONTRACTOR AGREES TO REMOVE AND RECAST ANY FOOTING WHERE THE ABOVE CONDITIONS ARE NOT MET.

EXPOSED SITE WALLS, RETAINING WALLS, AND STEM WALLS GREATER THAN 30 FEET IN LENGTH SHALL HAVE CONTROL JOINTS INSTALLED AT THE FOLLOWING MAXIMUM SPACING:

12'-0" ON CENTER FOR WALLS 6'-0" MAXIMUM HEIGHT
18'-0" ON CENTER FOR WALLS 10'-0" MAXIMUM HEIGHT
20'-0" ON CENTER FOR WALLS GREATER THAN 10'-0" IN HEIGHT

ALL CONCRETE EXPOSED TO GROUND SHALL BE MANUFACTURED WITH PORTLAND CEMENT TYPE II OR TYPE V.

SEE THE S7.00 SERIES SHEETS FOR TYPICAL CONCRETE DETAILS.

REINFORCING STEEL:

ALL REINFORCING STEEL SHALL BE FABRICATED AND PLACED IN ACCORDANCE WITH THE BUILDING CODE REQUIREMENTS FOR STRUCTURAL CONCRETE (ACI 318-14), AND DETAILS AND DETAILING OF CONCRETE REINFORCEMENT (ACI 315-99).

ALL REINFORCING STEEL SHALL CONFORM TO ASTM A615 GRADE 60; EXCEPT STIRRUPS, TIES AND INDICATED FIELD-BENT BARS, WHICH SHALL CONFORM TO ASTM A615 GRADE 40.

ALL WELDED WIRE FABRIC SHALL BE DEFORMED AND SHALL CONFORM TO ASTM A479. PROVIDE IN FLAT SHEETS ONLY.

TENSION AND COMPRESSION LAPS IN REINFORCING SHALL CONFORM TO THE LAP SPLICE SCHEDULE ON SHEET S-601 AND BE IN ACCORDANCE WITH ACI 318, CHAPTER 12, UNLESS NOTED OTHERWISE.

ALL HORIZONTAL REINFORCING IN FOOTINGS, WALLS AND BEAMS SHALL BE CONTINUOUS AROUND CORNERS OR HAVE BENT (CORNER) BARS OF THE SAME SIZE AND SPACING AS THE HORIZONTAL BARS AND LAP 30 BAR DIAMETERS (24" MINIMUM).

CONCRETE COVER FOR REINFORCING SHALL BE AS FOLLOWS UNLESS OTHERWISE NOTED:

A. CONCRETE CAST AGAINST AND PERMANENTLY EXPOSED TO EARTH: 3"
B. CONCRETE CAST AGAINST FORMS BUT EXPOSED TO EARTH OR WEATHER:
   1. BARS LARGER THAN NO. 5: 2"
   2. BARS NO. 5 OR SMALLER: 1 1/2"
C. CONCRETE NOT EXPOSED TO WEATHER OR NOT IN CONTACT WITH GROUND:
   1. COLUMNS, GIRDERS AND BEAMS: 1 1/2"
   2. STRUCTURAL SLABS, WALLS AND JOISTS (NO. 11 AND SMALLER): 3/4"
D. SLAB ON GRADE: 1 1/2" FROM TOP OF SLAB
E. STRUCTURAL SLABS ON METAL DECK: 1" FROM TOP OF SLAB

FORM TIES SHALL BE EITHER OF THE THREADED OR SNAP-OFF TYPE SO THAT NO METAL WILL BE LEFT WITHIN 1 INCH OF THE SURFACE OF THE WALL. FOLLOWING REMOVAL OF FORM TIES, RECESSES ARE TO BE CAREFULLY FILLED AND POINTED WITH MORTAR.

REINFORCING SHALL NOT BE TACK WELDED OR WELDED IN ANY MANNER UNLESS SPECIFICALLY DETAILED ON THE STRUCTURAL PLANS.

BAR SUPPORTS AND SPACERS FOR REINFORCING SHALL BE PROVIDED IN ACCORDANCE WITH ACI 315-99. REINFORCING SHALL BE SECURELY TIED TO SUPPORTS.

CHAIRS WITH 22 GAGE SAND PLATES OR PRECAST BLOCKS SHALL BE PROVIDED FOR ALL REINFORCING OF CONCRETE IN CONTACT WITH GRADE.

DECK CHAIRS SHALL BE PROVIDED FOR ALL WELDED WIRE FABRIC IN SLABS OVER METAL DECK.

GENERAL STRUCTURAL NOTES

POST INSTALLED ANCHORS:

THE STRUCTURAL DESIGN IS BASED ON THE POST INSTALLED ANCHORING SYSTEMS NOTED BELOW. SINCE ANCHOR CAPACITIES VARY BY MANUFACTURER, THE CONTRACTOR SHALL USE ONLY THE SYSTEMS NOTED BELOW UNLESS AN ALTERNATE IS APPROVED BY THE ENGINEER OF RECORD. ALTERNATE ANCHORING SYSTEMS MAY REQUIRE RE-DESIGN TO VERIFY ANCHOR QUANTITIES, SPACING, AND EMBED DEPTHS. THE CONTRACTOR SHALL BE RESPONSIBLE FOR ANY ADDITIONAL CONSTRUCTION AND RE-DESIGN COSTS ASSOCIATED WITH THE ALTERNATE ANCHORING SYSTEM.

ALL ADHESIVE (EPOXY) FOR POST INSTALLED ANCHORS AND/OR REBAR INTO CONCRETE SHALL BE HILTI HIT-RE 500 V3 OR HIT-HY 200 EPOXY ADHESIVE ANCHORING SYSTEM, HILTI HIT-RE 100 OR HIT-HY 200 EPOXY ADHESIVE SYSTEM OR APPROVED EQUAL. INSTALLATION SHALL BE PER MANUFACTURER'S RECOMMENDATIONS.

ALL ADHESIVE (EPOXY) FOR POST INSTALLED ANCHORS AND/OR REBAR INTO GROUT FILLED MASONRY SHALL BE HILTI HIT HY 70 ADHESIVE ANCHORING SYSTEM OR APPROVED EQUAL. INSTALLATION SHALL BE PER MANUFACTURER'S RECOMMENDATIONS.

ALL ADHESIVE (EPOXY) FOR POST INSTALLED ANCHORS AND/OR REBAR INTO HOLLOW MASONRY AND/OR BRICK SHALL BE HILTI HIT HY 70 ADHESIVE ANCHORING SYSTEM OR APPROVED EQUAL. INSTALLATION SHALL BE PER MANUFACTURER'S RECOMMENDATIONS.

ALL POST INSTALLED MECHANICAL ANCHORS INTO CONCRETE SHALL BE HILTI KWIK BOLT TZ EXPANSION ANCHOR OR APPROVED EQUAL. INSTALLATION SHALL BE PER MANUFACTURER'S RECOMMENDATIONS.

ALL POST INSTALLED MECHANICAL ANCHORS INTO GROUT FILLED MASONRY SHALL BE HILTI KWIK BOLT 3 EXPANSION ANCHOR OR APPROVED EQUAL. INSTALLATION SHALL BE PER MANUFACTURER'S RECOMMENDATIONS.

ANCHOR LENGTHS SHOWN FOR ATTACHMENT TO CONCRETE AND/OR MASONRY ARE REQUIRED EMBEDMENT LENGTHS. THE CONTRACTOR SHALL PROVIDE ANCHORS WITH ADDITIONAL LENGTH TO FACILITATE THE REQUIRED CONNECTION.

SUBMIT ALL PROPOSED ANCHORING SYSTEMS INCLUDING ICC-ES REPORTS TO STRUCTURAL ENGINEER FOR REVIEW PRIOR TO INSTALLATION. THE ICC–ES FORMS SHALL MEET THE REQUIREMENTS OF THE IBC REFERENCED IN THESE NOTES.

STRUCTURAL AND MISCELLANEOUS STEEL:

ALL STRUCTURAL STEEL SHALL BE DETAILED AND FABRICATED IN ACCORDANCE WITH THE AISC "SPECIFICATION FOR STRUCTURAL STEEL BUILDINGS".

ALL WIDE FLANGE SHAPES SHALL CONFORM TO ASTM A992, GRADE 50, UNLESS NOTED OTHERWISE.

ALL MISCELLANEOUS STEEL MEMBERS, SUCH AS CHANNELS, ANGLES, FLAT BARS, AND PLATES SHALL CONFORM TO ASTM A36 UNLESS NOTED OTHERWISE.

ALL RECTANGULAR AND SQUARE STRUCTURAL TUBING SHALL CONFORM TO ASTM A500, GRADE B, FY = 46 KSI OR ASTM 1085, GRADE B, FY = 50 KSI.

ALL ROUND STRUCTURAL TUBING SHALL CONFORM TO ASTM A500, GRADE B, FY = 42 KSI OR ASTM 1085, GRADE B, FY = 50 KSI.

ALL STRUCTURAL PIPE SHALL CONFORM TO ASTM A53, TYPE E OR S, GRADE B, FY = 35 KSI.

BOLTS SHALL CONFORM TO ASTM A325N TENSION CONTROL BOLTS UNLESS NOTED OTHERWISE, WITH SIZES AS SHOWN ON THE DRAWINGS. WHERE CLEARANCE WITHIN A CONNECTION DOES NOT PERMIT THE USE OF TENSION CONTROL BOLTS, STANDARD A325N BOLTS SHALL BE USED AND INSPECTED IN ACCORDANCE WITH THE AISC "SPECIFICATION FOR STRUCTURAL JOINTS USING ASTM A325 OR A490 BOLTS".

ALL BOLTS SHALL BE INSTALLED IN A SNUG TIGHT CONDITION EXCEPT AT MOMENT CONNECTIONS, BRACED FRAME CONNECTIONS, AND AT CONNECTIONS DETAILED WITH A325SC BOLTS. AT THESE LOCATIONS, THE BOLTS SHALL BE TIGHTENED SO AS TO SHEAR THE SPLINE OFF THE BOLT.

ANCHOR BOLTS EMBEDDED IN CONCRETE SHALL BE ASTM F1554 GRADE 36 THREADED RODS WITH DOUBLE NUTS. PROVIDE FLAT WASHERS BETWEEN NUTS AND BASEPLATE SURFACES. ANCHOR BOLT LENGTHS SHOWN FOR ATTACHMENT TO CONCRETE AND/OR MASONRY ARE REQUIRED EMBEDMENT LENGTHS. THE CONTRACTOR SHALL PROVIDE ANCHOR BOLTS WITH ADDITIONAL BOLT LENGTH TO FACILITATE THE REQUIRED CONNECTION.

ANCHOR BOLT FLAT WASHERS SHALL BE PROVIDED IN ACCORDANCE WITH TABLE 14-2 OF AISC 360, AISC MANUAL OF STEEL CONSTRUCTION LATEST EDITION.

ALL WELDING SHALL BE DONE IN ACCORDANCE WITH THE LATEST STANDARDS OF THE AWS STRUCTURAL WELDING CODE.

ALL BOLT HOLES THAT ARE REQUIRED TO BE FIELD DRILLED SHALL BE DRILLED WITH A MAG DRILL. FLAME CUTTING OF HOLES OR ENLARGING OF MISALIGNED HOLES WILL NOT BE ALLOWED.

HEADED CONCRETE ANCHORS AND SHEAR CONNECTORS SHALL BE MADE FROM STEEL CONFORMING TO ASTM A108 AND MEET THE MECHANICAL PROPERTIES OF TYPE B, AS REQUIRED BY CHAPTER 7 OF AWS D1.1 "STRUCTURAL WELDING CODE-STEEL", LATEST EDITION. STRUCTURAL STEEL TO RECEIVE SHEAR CONNECTORS SHALL BE FREE OF PAINT. WELDING PREQUALIFICATION REQUIRED.

PROVIDE A SLIDE BEARING CONNECTION FOR STEEL BEAMS BEARING ON MASONRY WALLS UNLESS NOTED OTHERWISE. SEE SHEET S7.41 FOR TYPICAL CONNECTION DETAIL.
SEE S7.00 SERIES SHEETS FOR TYPICAL STEEL DETAILS.

COMPOSITE FLOORS:

THE METAL DECK FOR COMPOSITE FLOORS SHALL BE UNSHORED UNLESS NOTED OTHERWISE.

THE SHEAR CONNECTORS SHALL BE 3/4" DIAMETER X 4 1/2" AT 3" DEEP DECK UNLESS NOTED OTHERWISE. THE SHEAR CONNECTORS SHALL BE MADE FROM STEEL CONFORMING TO ASTM A108 AND MEET THE MECHANICAL PROPERTIES OF TYPE B, AS REQUIRED BY CHAPTER 7 OF AWS D1.1 "STRUCTURAL WELDING CODE STEEL", LATEST EDITION. STRUCTURAL STEEL TO RECEIVE SHEAR CONNECTIONS SHALL BE FREE OF PAINT. WELDING PREQUALIFICATION REQUIRED.

THE SHEAR CONNECTIONS SHALL NOT BE ADDED UNTIL THE METAL FLOOR DECK IS INSTALLED.

WHERE SHEAR CONNECTIONS AND PUDDLE WELDS COINCIDE, THE SHEAR CONNECTOR MAY REPLACE THE PUDDLE WELD.

CAMBERED BEAMS SHALL HAVE THE CAMBER PUT IN AT 1/3 POINTS OR ALONG A PARABOLIC CURVE.

THE CONTRACTOR SHALL SURVEY THE CAMBER OF THE BEAMS AFTER THE BEAMS HAVE BEEN ERECTED. THE CONTRACTOR SHALL SUBMIT THE SURVEY TO THE ENGINEER FOR REVIEW. THE CONTRACTOR SHALL NOT POUR THE SLAB UNTIL THE ENGINEER HAS REVIEWED AND APPROVED THE BEAM CAMBERS.

CONTRACTOR SHALL SHORE BEAMS WITH A CAMBER MORE THAN 1/2" LOWER THAN SPECIFIED. THE BEAM SHALL BE ALLOWED TO DEFLECT TO LEVEL.

THE CONCRETE FOR THE SLAB SHALL BE POURED AND PLACED TO THE ELEVATION INDICATED ON THE DRAWINGS WHILE MAINTAINING THE MINIMUM THICKNESS. SPREAD CONCRETE OVER AREA OF INFLUENCE TO ROUGH DEPTH IN ORDER TO LOAD BEAMS AND GIRDERS PRIOR TO SETTING SCREED ELEVATIONS.

THE WEIGHT OF THE WET CONCRETE WILL CAUSE DEFLECTIONS OF THE STEEL FRAMING. THEREFORE, CONCRETE OVERRRUNS ARE TO BE ANTICIPATED BY THE CONTRACTOR.

CONTRACTOR SHALL CONTINUOUSLY MONITOR THE THICKNESS AND ELEVATIONS DURING CONCRETE PLACING OPERATIONS.

PROVIDE #4 X 6'-0" AT 12" ON CENTER OVER ALL GIRDERS OF COMPOSITE FLOORS.

PROVIDE #4 X 6'-0" AT 12" ON CENTER OVER SHORED BEAMS THAT ARE NOT ALLOWED TO DEFLECT TO LEVEL.

PROVIDE WELDED WIRE FABRIC AS INDICATED ON DRAWINGS IN FLAT SHEETS ONLY.

PROVIDE DECK CHAIRS FOR ALL WELDED WIRE FABRIC IN SLABS OVER METAL DECK.

STEEL JOISTS:

STEEL JOISTS SHALL BE MANUFACTURED BY A MEMBER OF SJI.

STEEL JOISTS SHALL BE DESIGNED, FABRICATED AND ERECTED IN ACCORDANCE WITH THE LATEST EDITION OF THE STEEL JOIST INSTITUTE STANDARD SPECIFICATIONS.

NO CONSTRUCTION LOADS OF ANY KIND SHALL BE PLACED ON UNBRIDGED JOISTS.

WHERE COLUMNS ARE NOT FRAMED IN AT LEAST TWO DIRECTIONS WITH STRUCTURAL STEEL MEMBERS, JOISTS AT OR CLOSEST TO COLUMN LINES SHALL BE FIELD BOLTED TO ADD LATERAL STABILITY DURING CONSTRUCTION.

PROVIDE BRIDGING IN ACCORDANCE WITH THE LATEST EDITION OF THE SJI STANDARD SPECIFICATIONS AND OSHA REQUIREMENTS.

THE STRUCTURAL DRAWINGS ARE NOT STAND-ALONE DOCUMENTS. THE CONTRACTOR SHALL COORDINATE THE LOCATIONS AND WEIGHTS OF ALL MECHANICAL, PLUMBING, ELECTRICAL AND OTHER EQUIPMENT WITH THE APPLICABLE DRAWINGS. THE JOIST SUPPLIER SHALL ACCOUNT FOR THE LOADS IN THEIR DESIGN.

THE STEEL JOIST MANUFACTURER SHALL DESIGN ROOF JOISTS SUPPORTING MECHANICAL UNITS, INDICATED AS SP JOISTS ON THE DRAWINGS, FOR 1.2x MECHANICAL UNIT WEIGHTS SHOWN. USE 25 PSF DEAD LOAD AND 20 PSF LIVE LOAD (NON-REDUCIBLE) UNLESS NOTED OTHERWISE. CONTRACTOR SHALL VERIFY ACTUAL MECHANICAL LOADS. NOTIFY STEEL JOIST MANUFACTURER OF ANY DISCREPANCIES.

JOIST DEFLECTIONS SHALL BE LIMITED PER SJI REQUIREMENTS AND SHALL NOT BE LESS THAN THE FOLLOWING:
L/360 FOR ROOF LIVE LOAD WITH STANDARD SJI CAMBER WHERE PLASTER OR STUCCO CEILINGS ARE SUPPORTED.
L/240 FOR ROOF LIVE LOAD WITH STANDARD SJI CAMBER WHERE NONPLASTER CEILINGS ARE SUPPORTED.
L/180 FOR ROOF LIVE LOAD WITH STANDARD SJI CAMBER WHERE NO CEILINGS ARE SUPPORTED AND PROVISIONS FOR FUTURE CEILINGS ARE NOT REQUIRED.

GENERAL STRUCTURAL NOTES

ELEVATORS:

THE STRUCTURE HAS BEEN DESIGNED FOR A KONE ELEVATOR.

ALL STRUCTURAL SUPPORTS, FLOOR PENETRATION SIZES AND PIT DIMENSIONS HAVE BEEN DESIGNED BASED ON THE ABOVE INFORMATION. SHOULD THE ACTUAL ELEVATOR(S) SELECTED DIFFER FROM THE INFORMATION PROVIDED ABOVE, THE CONTRACTOR SHALL BE RESPONSIBLE FOR ANY ADDITIONAL CONSTRUCTION AND REDESIGN COSTS ASSOCIATED WITH THE ALTERNATE ELEVATOR(S).

THE CONTRACTOR SHALL BE RESPONSIBLE FOR COORDINATING ALL ELEVATOR PIT AND FLOOR PENETRATION LOCATIONS AND DIMENSIONS.

THE CONTRACTOR SHALL BE RESPONSIBLE FOR COORDINATING ALL ELEVATOR OVERRUN REQUIREMENTS.

ELEVATOR CAR RAIL AND COUNTERWEIGHT RAIL SUPPORTS SHALL BE PROVIDED BY THE CONTRACTOR. CAR RAIL AND COUNTERWEIGHT RAIL SUPPORTS SHALL BE PROVIDED AT AND BETWEEN ALL FLOOR LEVELS SERVICED BY THE ELEVATOR, ABOVE THE LAST STOP OF THE ELEVATOR, AND BETWEEN THE BASEMENT AND THE GROUND FLOOR AS REQUIRED BY THE ELEVATOR MANUFACTURER. IF THE ELEVATOR MANUFACTURER REQUIRES RAIL SUPPORTS THAT DIFFER FROM THOSE PROVIDED, THE ELEVATOR MANUFACTURER SHALL BE RESPONSIBLE FOR ADDITIONAL CONSTRUCTION COST AND DESIGN COST.

THE CONTRACTOR SHALL VERIFY THE DESIGN OF THE HOIST/SAFETY BEAM AND CONNECTIONS AS REQUIRED PER THE ELEVATOR MANUFACTURER.

STRUCTURAL ELEMENTS AFFECTED BY THE ELEVATOR LAYOUT SHALL NOT BE FABRICATED PRIOR TO APPROVAL OF ELEVATOR SHOP DRAWINGS.

SPECIAL INSPECTION:

THE OWNER SHALL PROVIDE FOR SERVICES OF A CERTIFIED INSPECTOR (APPROVED BY THE BUILDING OFFICIAL OR THE ENGINEER OF RECORD) IN ACCORDANCE WITH CHAPTER 17 OF THE INTERNATIONAL BUILDING CODE FOR THE SPECIAL INSPECTION ITEMS NOTED ON SHEET S0.03.

DEFERRED SUBMITTALS:

THE DEFERRED SUBMITTALS LISTED BELOW ARE THOSE PORTIONS OF THE DESIGN THAT ARE NOT COMPLETED AT THE TIME OF APPLICATION AND ARE TO BE SUBMITTED TO THE BUILDING OFFICIAL AND APPROVED PRIOR TO THE INSTALLATION OF THOSE ITEMS. THE MANUFACTURER, CONSULTANT, OR CONTRACTOR, AS APPROPRIATE, SHALL PROVIDE SUBMITTALS TO THE ENGINEER OF RECORD FOR REVIEW FOR THE FOLLOWING ITEMS:

SPECIAL STEEL JOISTS
METAL STAIRS
EXTERIOR COLD-FORMED METAL FRAMING
INTERIOR COLD-FORMED METAL FRAMING
TEMPORARY SHORING
HANDRAILS
CURTAIN WALL AND STOREFRONT
AGGREGATE PIERS / STONE COLUMN GROUND IMPROVEMENT
PRECAST CONCRETE COLUMNS AND ASSOCIATED ATTACHMENTS AND ANCHORAGE

SCHEDULE OF STRUCTURAL SPECIAL INSPECTIONS

1. SPECIAL INSPECTIONS / TESTING - "SPECIAL STRUCTURAL INSPECTION" SHALL NOT RELIEVE THE OWNER OR THEIR AGENT FROM HAVING THE INSPECTIONS OF THE JURISDICTION BUILDING DEPARTMENT PER SECTION 110 OF THE IBC PERFORMED. BOTH THE JURISDICTION BUILDING DEPARTMENT INSPECTIONS AND "SPECIAL STRUCTURAL INSPECTION" SHALL BE PERFORMED.

2. THE GENERAL CONTRACTOR SHALL BE RESPONSIBLE FOR NOTIFYING THE JURISDICTION BUILDING OFFICIAL AND SPECIAL INSPECTOR WHEN WORK IS READY FOR INSPECTION.

3. REPORTING FOR SPECIAL INSPECTION - SPECIAL INSPECTION AND TESTING REPORTS SHALL BE COMPLETED AND DISTRIBUTED AT THE COMPLETION OF EACH TASK. IF A TASK IS TO TAKE LONGER THAN THREE (3) DAYS, PROVIDE REPORTS FOR EACH DAY. PROVIDE COPIES OF REPORTS TO CONTRACTOR, OWNER, ARCHITECT AND STRUCTURAL ENGINEER OF RECORD. SPECIAL INSPECTOR TO KEEP A NON-COMPLIANCE LIST DOCUMENTING ITEMS INSPECTED NOT MEETING APPROVED CONSTRUCTION DOCUMENTS AND WHEN / HOW RESOLVED.

4. SEE ARCHITECTURAL, MECHANICAL, ELECTRICAL, AND PLUMBING CONSTRUCTION DOCUMENTS FOR ADDITIONAL NON-STRUCTURAL SPECIAL INSPECTION ITEMS.

5. SPECIAL INSPECTION OF SHOP FABRICATED MEMBERS AND ASSEMBLIES SHALL BE IN ACCORDANCE WITH SECTION 1704.2, UNLESS FABRICATOR IS APPROVED TO PERFORM WORK WITHOUT SPECIAL INSPECTION.

6. IN ACCORDANCE WITH IBC CHAPTER 17, THE OWNER OR THE OWNER'S AGENT, OTHER THAN THE CONTRACTOR, SHALL EMPLOY ONE OR MORE APPROVED AGENCIES TO PROVIDE SPECIAL INSPECTIONS AND TESTS, DURING CONSTRUCTION FOR THE TYPES OF WORK LISTED BELOW THESE SPECIAL INSPECTIONS AND TESTS ARE IN ADDITION TO THE INSPECTIONS BY THE BUILDING OFFICIAL IDENTIFIED IN IBC SECTION 110

7. DEFINITIONS:
   * **SPECIAL INSPECTION:** INSPECTION AS HEREIN REQUIRED BY A QUALIFIED SPECIAL INSPECTOR COMPETENT WITH THE MATERIALS, INSTALLATION, FABRICATION, ERECTION OR PLACEMENT OF COMPONENTS AND CONNECTIONS REQUIRING SPECIAL EXPERTISE TO ENSURE COMPLIANCE WITH APPROVED CONSTRUCTION DOCUMENTS AND REFERENCED STANDARDS (SEE SECTION 1704).
   * **CONTINUOUS SPECIAL INSPECTION:** FULL-TIME OBSERVATION OF WORK REQUIRING SPECIAL INSPECTION BY AN APPROVED SPECIAL INSPECTOR WHO IS PRESENT IN THE AREA WHERE THE WORK IS BEING PERFORMED.
   * **PERIODIC SPECIAL INSPECTION:** THE PART-TIME OR INTERMITTENT OBSERVATION OF WORK REQUIRING SPECIAL INSPECTION BY AN APPROVED SPECIAL INSPECTOR WHO IS PRESENT IN THE AREA WHERE THE WORK HAS BEEN OR IS BEING PERFORMED AND AT THE COMPLETION OF THE WORK.

ITEM	DESCRIPTION OF REQUIREMENTS	REQUIRED (YES/NO)
SPECIAL INSPECTION OF STRUCTURAL STEEL	TO BE PERFORMED IN ACCORDANCE WITH CHAPTER N OF AISC 360-10	YES
SPECIAL INSPECTION AND VERIFICATION OF STEEL CONSTRUCTION OTHER THAN STRUCTURAL STEEL	TO BE PERFORMED IN ACCORDANCE WITH IBC SECTION 1705.2	YES
SPECIAL INSPECTIONS AND VERIFICATIONS FOR CONCRETE CONSTRUCTION	TO BE PERFORMED IN ACCORDANCE WITH IBC SECTION 1705.3	YES
SPECIAL INSPECTIONS AND VERIFICATIONS FOR MASONRY CONSTRUCTION	TO BE PERFORMED IN ACCORDANCE WITH IBC SECTION 1705.4 AND REFERENCED STANDARDS	YES
SPECIAL INSPECTIONS AND VERIFICATIONS FOR WOOD CONSTRUCTION	TO BE PERFORMED IN ACCORDANCE WITH IBC SECTION 1705.5	NO
SPECIAL INSPECTIONS AND VERIFICATIONS OF SOILS	TO BE PERFORMED IN ACCORDANCE WITH IBC SECTION 1705.6, THE GEOTECHNICAL REPORT LISTED IN THE GENERAL FOUNDATION NOTES, AND ANY OTHER REQUIREMENTS LISTED IN THE GENERAL FOUNDATION NOTES	YES
SPECIAL INSPECTIONS AND VERIFICATIONS FOR DEEP FOUNDATIONS (DRIVEN PILES, CAST-IN-PLACE, OR HELICAL PILES AS APPLICABLE)	TO BE PERFORMED IN ACCORDANCE WITH IBC SECTIONS 1705.7-1705.9 AS APPLICABLE, THE GEOTECHNICAL REPORT LISTED IN THE GENERAL FOUNDATION NOTES, AND ANY OTHER REQUIREMENTS LISTED IN THE CONSTRUCTION DOCUMENTS	NO
SPECIAL INSPECTIONS FOR WIND RESISTANCE (REQUIRED ONLY FOR Vult= 155MPH OR GREATER IN EXPOSURE CATEGORY B, OR Vult=142MPH OR GREATER IN EXPOSURE CATEGORY C OR D)	TO BE PERFORMED IN ACCORDANCE WITH IBC SECTION 1705.11	NO
SPECIAL INSPECTIONS AND VERIFICATIONS FOR SEISMIC RESISTANCE (REQUIRED FOR STRUCTURES ASSIGNED TO CATEGORIES C, D, E, OR F)	TO BE PERFORMED IN ACCORDANCE WITH ALL APPLICABLE PORTIONS OF IBC SECTIONS 1705.12 AND 1705.13	NO

ADDITIONAL INSPECTIONS REQUIRED PER SIDEPLATE SYSTEMS ON SHEET S8.01

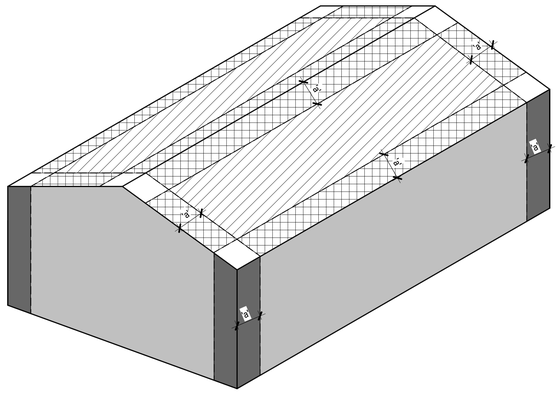

COMPONENTS AND CLADDING WIND PRESSURES (PSF) CALCULATED AT MEAN ROOF HEIGHT = [ ] FEET			
a = [ ] FT	EFFECTIVE WIND AREA (FT²)		
ZONE	10	100	500
1	34.0	32.0	30.6
2	59.1	52.0	47.3
1 AND 2 OVERHANGS	59.1	59.1	59.1
3	87.5	77.0	70.0
3 OVERHANGS	100.7	94.6	90.6
4	40.3	33.5	28.2
4 PARAPETS	96.3	79.9	67.4
5	62.3	51.7	43.6
5 PARAPETS	121.5	100.9	85.1

ZONE 1 ZONE 4
ZONE 2 ZONE 5
ZONE 3

A1 COMPONENT AND CLADDING WIND LOADING DIAGRAM
SCALE: 3/8" = 1'-0"

James R. Childers Architect, Inc.
45 South 4th Street
Fort Smith, AR 72901
479-783-2480
www.childersarchitect.com

PROFESSIONAL SEAL:
CHRIS S. ROMERO 23576 REGISTERED PROFESSIONAL ENGINEER
11.01.19

CONSULTANT LOGO:
Chavez-Grieves consulting engineers, inc.
4700 Lincoln Road NE, Suite 102 Albuquerque, NM 87109
505-344-4080 505-343-8759 (fax)

CLIENT:
THE CHEROKEE NATION SEAL OF SEPT. 6, 1839

WILMA P. MANKILLER HEALTH CENTER EXPANSION
STILWELL, OKLAHOMA

KEY PLAN:

PROJECT PHASE:
BID PACKAGE 01

REVISIONS		
#	DATE	DESCRIPTION

DATE: 11-01-19
JOB NUMBER: 18-01.01
SHEET NUMBER: S0.03

GENERAL STRUCTURAL NOTES AND SPECIAL INSPECTIONS

GENERAL STRUCTURAL NOTES

GENERAL:

STRUCTURAL DRAWINGS ARE NOT STAND-ALONE DOCUMENTS AND ARE INTENDED TO BE USED IN CONJUNCTION WITH CIVIL, ARCHITECTURAL, MECHANICAL, ELECTRICAL, AND DRAWINGS FROM OTHER DISCIPLINES. THE CONTRACTOR SHALL COORDINATE ALL REQUIREMENTS OF THE CONTRACT DOCUMENTS INTO THE SHOP DRAWINGS AND FIELD WORK.

COORDINATE DIMENSIONS OF ALL OPENINGS, DEPRESSIONS, BLOCKOUTS, ETC. WITH ARCHITECTURAL DRAWINGS, DRAWINGS FROM OTHER DISCIPLINES, PROJECT SHOP DRAWINGS, AND FIELD CONDITIONS PRIOR TO SHOP DRAWING SUBMITTAL. THE STRUCTURAL DRAWINGS ONLY REPRESENT A PORTION OF THE REQUIREMENTS FOR THE PROJECT.

SEE ARCHITECTURAL PLANS FOR INTERIOR NON-BEARING PARTITION WALLS. PARTITION FRAMING SHALL BE CONNECTED TO THE PRIMARY STRUCTURE TO ALLOW FOR VERTICAL LIVE LOAD DEFLECTIONS OF SPAN/360 FOR FLOOR FRAMING AND SPAN/240 FOR ROOF FRAMING.

CONTRACTOR'S CONSTRUCTION AND/OR ERECTION SEQUENCES SHALL RECOGNIZE AND CONSIDER THE EFFECTS OF THERMAL MOVEMENTS OF STRUCTURAL ELEMENTS DURING THE CONSTRUCTION PERIOD.

THE CONTRACTOR SHALL VERIFY ALL DIMENSIONS IN THE FIELD.

SHOP DRAWINGS SHALL BE FURNISHED AND REVIEWED BEFORE ANY FABRICATION OR ERECTION IS STARTED. THE CONTRACTOR SHALL REVIEW AND APPROVE SHOP DRAWINGS PRIOR TO SUBMITTAL TO THE ARCHITECT FOR REVIEW. POORLY EXECUTED SHOP DRAWINGS WILL BE REJECTED AND SHALL BE RESUBMITTED.

THE CONTRACTOR SHALL BE RESPONSIBLE FOR PROVIDING SAFE AND ADEQUATE SHORING FOR ALL PARTS OF THE STRUCTURE DURING CONSTRUCTION.

TEMPORARY PROVISIONS SHALL BE MADE FOR STRUCTURAL STABILITY DURING CONSTRUCTION. THE STRUCTURE SHOWN ON THE DRAWINGS HAS BEEN DESIGNED FOR STABILITY UNDER FINAL CONFIGURATION.

NOTCHING OR CUTTING ANY STRUCTURAL MEMBER IN THE FIELD IS PROHIBITED.

THE CONTRACTOR SHALL VERIFY THE SIZE AND LOCATION OF FOUNDATIONS UNDER MECHANICAL AND ELECTRICAL EQUIPMENT AS REQUIRED. NO CONCRETE PADS SHALL BE LOCATED ON ROOF UNLESS SHOWN ON THE STRUCTURAL DRAWINGS.

BACKFILL SHALL NOT BE PLACED BEHIND RETAINING WALLS UNTIL CONCRETE HAS ATTAINED 100 PERCENT OF DESIGN STRENGTH.

BACKFILL SHALL NOT BE PLACED BEHIND BASEMENT WALLS UNTIL THE CONCRETE HAS ATTAINED 100 PERCENT OF DESIGN STRENGTH AND THE ELEVATED FLOOR PROVIDING LATERAL SUPPORT AT THE TOP OF THE WALL IS COMPLETELY CONSTRUCTED, OR TEMPORARY BRACING/SHORING OF THE WALL IS PROVIDED. DESIGN OF ANY TEMPORARY WALL BRACING/SHORING IS THE RESPONSIBILITY OF THE CONTRACTOR.

REMOVAL OF FORMS AND SHORING SHALL BE IN ACCORDANCE WITH ACI 347. WHERE CONCRETE MUST SUPPORT SUPERIMPOSED LOADS PRIOR TO ATTAINING THE SPECIFIED DESIGN STRENGTH, RESHORE CONCRETE IN ACCORDANCE WITH ACI 347. RESHORING SHALL NOT BE REMOVED SOONER THAN 28 DAYS FROM THE DATE OF POUR OR UNTIL CONCRETE HAS ATTAINED THE SPECIFIED DESIGN STRENGTH.

THE CONTRACTOR SHALL SUBMIT FOR PRIOR APPROVAL THE END OF POUR LOCATIONS FOR CONCRETE GRADE BEAMS, CONCRETE COLUMNS, AND CONCRETE BEAMS.

THE CONTRACTOR SHALL BE RESPONSIBLE FOR ADHERING TO ALL APPLICABLE STANDARDS SET FORTH BY OSHA, INCLUDING THE FOLLOWING REQUIREMENTS FROM STANDARDS - 29 CFR, SECTION 1926, SUBPART R:

THE STEEL ERECTION CONTRACTOR SHALL NOT ERECT STEEL UNLESS THEY HAVE RECEIVED WRITTEN NOTIFICATION FROM THE CONTRACTOR THAT THE CONCRETE IN THE FOOTINGS, PIERS AND WALLS OR THE MORTAR IN THE MASONRY PIERS AND WALLS HAS ATTAINED, ON THE BASIS OF AN APPROPRIATE ASTM STANDARD TEST METHOD OF FIELD-CURED SAMPLES, EITHER 75 PERCENT OF THE INTENDED MINIMUM COMPRESSIVE DESIGN STRENGTH OR SUFFICIENT STRENGTH TO SUPPORT THE LOADS IMPOSED DURING STEEL ERECTION. PROVIDE STRUCTURAL ENGINEER A COPY OF WRITTEN NOTIFICATION WHEN IT IS PROVIDED TO THE STEEL ERECTOR.

B. ANCHOR RODS (ANCHOR BOLTS) SHALL NOT BE REPAIRED, REPLACED OR FIELD-MODIFIED WITHOUT THE APPROVAL OF THE PROJECT STRUCTURAL ENGINEER OF RECORD.

PRIOR TO ERECTION OF COLUMNS, THE CONTRACTOR SHALL PROVIDE WRITTEN NOTIFICATION TO THE STEEL ERECTOR IF THERE HAS BEEN ANY REPAIR, REPLACEMENT OR MODIFICATION OF THE ANCHOR RODS (ANCHOR BOLTS).

PROVIDE STRUCTURAL ENGINEER A COPY OF WRITTEN NOTIFICATION WHEN IT IS PROVIDED TO THE STEEL ERECTOR.

C. NO MODIFICATION THAT AFFECTS THE STRENGTH OF A STEEL JOIST OR STEEL JOIST GIRDER SHALL BE MADE WITHOUT THE APPROVAL OF THE PROJECT STRUCTURAL ENGINEER OF RECORD.

D. METAL DECKING HOLES AND OPENINGS SHALL NOT BE CUT UNTIL IMMEDIATELY PRIOR TO BEING PERMANENTLY FILLED WITH THE EQUIPMENT OR STRUCTURE, OR SHALL BE IMMEDIATELY COVERED.

PROTECTION: PROPER PRECAUTIONS SHALL BE TAKEN AT ALL TIMES TO PROTECT VEHICULAR AND PEDESTRIAN TRAFFIC FROM ANY DAMAGE OR INJURY WHICH MAY BE CAUSED, EITHER DIRECTLY OR INDIRECTLY, BY THE WORK INCLUDED ON THESE DRAWINGS. SUCH PRECAUTIONS SHALL INCLUDE THE ERECTION AND MAINTENANCE OF FENCES, BARRICADES, RAILINGS, GUARDS, SIGNS, COVERINGS, LIGHTS, AND OTHER PRECAUTIONS AS MAY BE REQUIRED. IF AT ANY TIME, IN THE OPINION OF THE OWNER OR THE OWNER'S REPRESENTATIVE, PROPER PRECAUTIONS ARE NOT BEING TAKEN TO SECURE THIS PROTECTION, THE CONTRACTOR SHALL AT NO ADDITIONAL COST TO THE OWNER, INSTALL AND MAINTAIN SUCH ADDITIONAL PROTECTION AS MAY BE DIRECTED BY THE OWNER.

POLLUTION CONTROLS: USE WATER SPRINKLING, TEMPORARY ENCLOSURES, AND OTHER SUITABLE METHODS TO LIMIT DUST AND DIRT RISING AND SCATTERING IN THE AIR TO LOWEST PRACTICAL LEVEL. COMPLY WITH GOVERNING REGULATIONS PERTAINING TO ENVIRONMENTAL PROTECTION.

DRAWINGS:

DO NOT SCALE DRAWINGS.

WHERE DISCREPANCIES OCCUR BETWEEN PLANS, DETAILS, GENERAL NOTES, AND SPECIFICATIONS, THE MORE STRINGENT REQUIREMENTS SHALL GOVERN. DETAILS ON DRAWINGS TAKE PRECEDENCE OVER GENERAL NOTES AND TYPICAL DETAILS. DETAILS NOTED "TYPICAL" APPLY TO ALL SIMILAR CONDITIONS. WHERE NO SPECIFIC DETAILS ARE SHOWN, CONSTRUCTION SHALL CONFORM TO SIMILAR WORK ELSEWHERE ON THE PROJECT.

DEMOLITION:

NOTCHING OR CUTTING ANY STRUCTURAL MEMBER IN THE FIELD IS PROHIBITED, UNLESS DETAILED OTHERWISE ON THE STRUCTURAL PLANS.

CONTRACTOR SHALL BE RESPONSIBLE FOR ADHERING TO ALL APPLICABLE STANDARDS SET FORTH BY OSHA.

PRIOR TO STARTING DEMOLITION WORK, THE CONTRACTOR SHALL MAKE AN INSPECTION OF ALL SURROUNDING IMPROVEMENTS TO REMAIN, TO DETERMINE AND RECORD THEIR EXISTING PHYSICAL CONDITION.

SHORING AND BRACING: THE CONTRACTOR SHALL FURNISH ALL SHORING, BRACING, AND INCIDENTALS NECESSARY AND REQUIRED FOR THE PROPER SUPPORT AND SAFETY OF ALL MEMBERS AFFECTED BY DEMOLITION WORK.

WHERE DEMOLITION WOULD AFFECT THE STRUCTURAL INTEGRITY OF THE REMAINING STRUCTURE, THE CONTRACTOR SHALL PROVIDE TEMPORARY SUPPORTS. THE CONTRACTOR SHALL NOTIFY THE ENGINEER OF ANY FIELD CONDITION WHICH WOULD PRESENT A HAZARDOUS CONDITION TO THE STRUCTURE BEFORE PROCEEDING.

PROTECTION: PROPER PRECAUTIONS SHALL BE TAKEN AT ALL TIMES TO PROTECT VEHICULAR AND PEDESTRIAN TRAFFIC FROM ANY DAMAGE OR INJURY WHICH MAY BE CAUSED, EITHER DIRECTLY OR INDIRECTLY, BY THE WORK INCLUDED ON THESE DRAWINGS. SUCH PRECAUTIONS SHALL INCLUDE THE ERECTION AND MAINTENANCE OF FENCES, BARRICADES, RAILINGS, GUARDS, SIGNS, COVERINGS, LIGHTS, AND OTHER PRECAUTIONS AS MAY BE REQUIRED. IF AT ANY TIME, IN THE OPINION OF THE OWNER OR THE OWNER'S REPRESENTATIVE, PROPER PRECAUTIONS ARE NOT BEING TAKEN TO SECURE THIS PROTECTION, THE CONTRACTOR SHALL AT NO ADDITIONAL COST TO THE OWNER, INSTALL AND MAINTAIN SUCH ADDITIONAL PROTECTION AS MAY BE DIRECTED BY THE OWNER.

POLLUTION CONTROLS: USE WATER SPRINKLING, TEMPORARY ENCLOSURES, AND OTHER SUITABLE METHODS TO LIMIT DUST AND DIRT RISING AND SCATTERING IN THE AIR TO LOWEST PRACTICAL LEVEL. COMPLY WITH GOVERNING REGULATIONS PERTAINING TO ENVIRONMENTAL PROTECTION.

REMOVE DEBRIS FROM THE SITE AS IT ACCUMULATES. UNLESS OTHERWISE NOTED, DO NOT STORE, SELL, BURN, OR OTHERWISE DISPOSE OF DEBRIS ON THE SITE. REMOVAL OF DEBRIS INCLUDES CLEARING OF ALL LOWER LEVELS AND SIMILAR BELOW GRADE STRUCTURES. REMOVE ALL DEBRIS IN SUCH A MANNER AS TO PREVENT SPILLAGE. KEEP ALL PAVEMENTS AND AREAS ADJACENT TO THE SITE CLEAN AND FREE FROM MUD, DIRT, AND DEBRIS AT ALL TIMES.

USE OF EXPLOSIVES: THE CONTRACTOR IS ABSOLUTELY PROHIBITED FROM USING DYNAMITE OR ANY OTHER EXPLOSIVES IN ANY OF THE WORK OR OPERATIONS SHOWN ON THESE PLANS AT THE PROJECT SITE.

DEMOLITION SHALL BE PERFORMED IN A MANNER THAT WILL NOT DAMAGE ADJOINING SURFACES INDICATED TO REMAIN. SURFACES SHALL BE PATCHED, IF REQUIRED, TO PROVIDE A SUITABLE SUBSTRATE FOR NEW CONSTRUCTION.

SPECIFIC DEMOLITION NOTES ARE NOT TO BE CONSIDERED ALL INCLUSIVE OR COMPLETE IN THEMSELVES. CONTRACTOR SHALL PROVIDE ALL DEMOLITION INCIDENTAL TO OR REQUIRED FOR CONSTRUCTION WHETHER SPECIFICALLY NOTED OR NOT.

STRUCTURAL DEMOLITION DRAWINGS SHOW STRUCTURAL DEMOLITION ONLY. SEE ARCHITECTURAL DRAWINGS FOR DEMOLITION OF EXISTING ARCHITECTURAL ELEMENTS.

James R. Childers Architect, Inc.
45 South 4th Street
Fort Smith, AR 72901
479-783-2480
www.childersarchitect.com

PROFESSIONAL SEAL:



CONSULTANT LOGO:

Chavez-Grieves
consulting engineers, inc.
4700 Lincoln Road NE, Suite 102 Albuquerque, NM 87109
505-344-4080 505-343-8759 (fax)

CLIENT:



WILMA P. MANKILLER HEALTH CENTER EXPANSION

STILWELL, OKLAHOMA

KEY PLAN:

PROJECT PHASE:

BID PACKAGE 01

REVISIONS

#	DATE	DESCRIPTION

DATE: 11-01-19

JOB NUMBER: 18-01.01

SHEET NUMBER:

SD0.01

DEMOLITION GENERAL STRUCTURAL NOTES

NOTE: CONTRACTOR TO CONFIRM WITH ARCH, PLUMBING AND CIVIL BEFORE REMOVAL OF UNDERGROUND PLUMBING AND UTILITIES. ANY PIPING OR OTHER UNDERGROUND CONDUIT TO BE ABANDONED SHALL BE CONFIRMED WITH THE GEOTECHNICAL ENGINEER FOR REQUIREMENTS TO MEET THE SPECIFIED BEARING STRATA FOR THE NEW STRUCTURAL FOUNDATIONS.

SEE SD0.01 FOR GENERAL DEMOLITION NOTES.

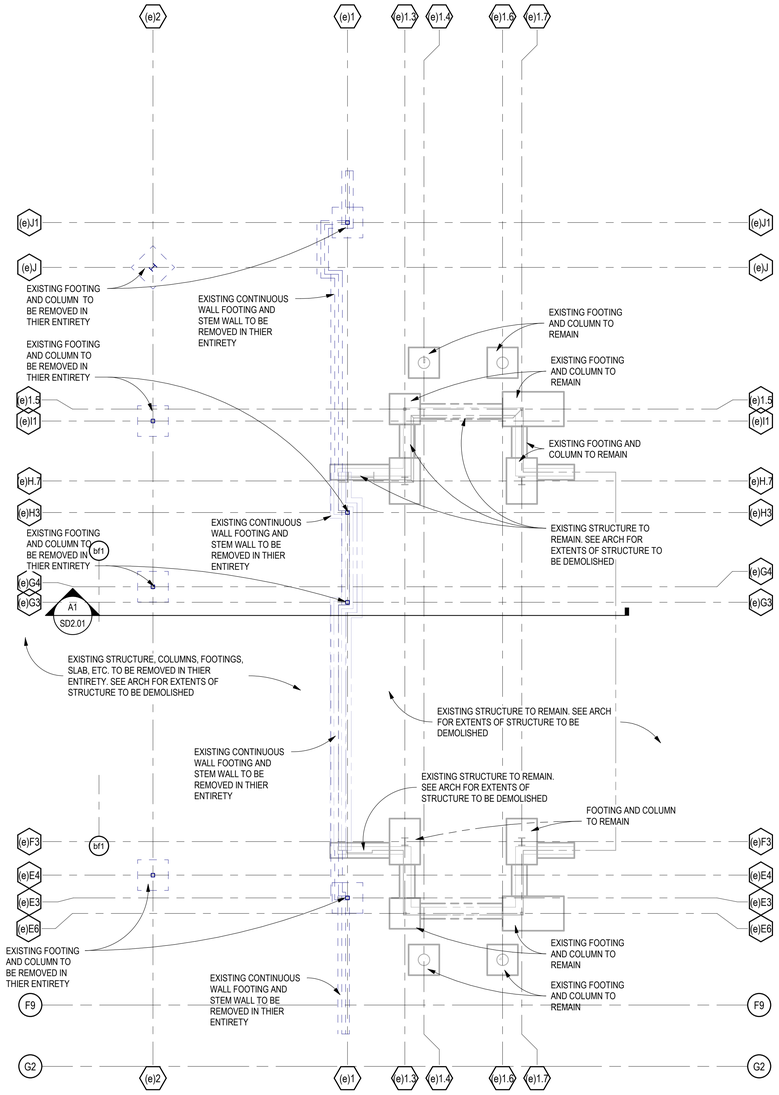

A1 EXISTING FOUNDATION DEMOLITION PLAN

SCALE: 1/8" = 1'-0"

NOTE: CONTRACTOR TO FIELD VERIFY THE LOCATION OF THE EXISTING EXPANSION JOINT.

SEE SD0.01 FOR GENERAL DEMOLITION NOTES.

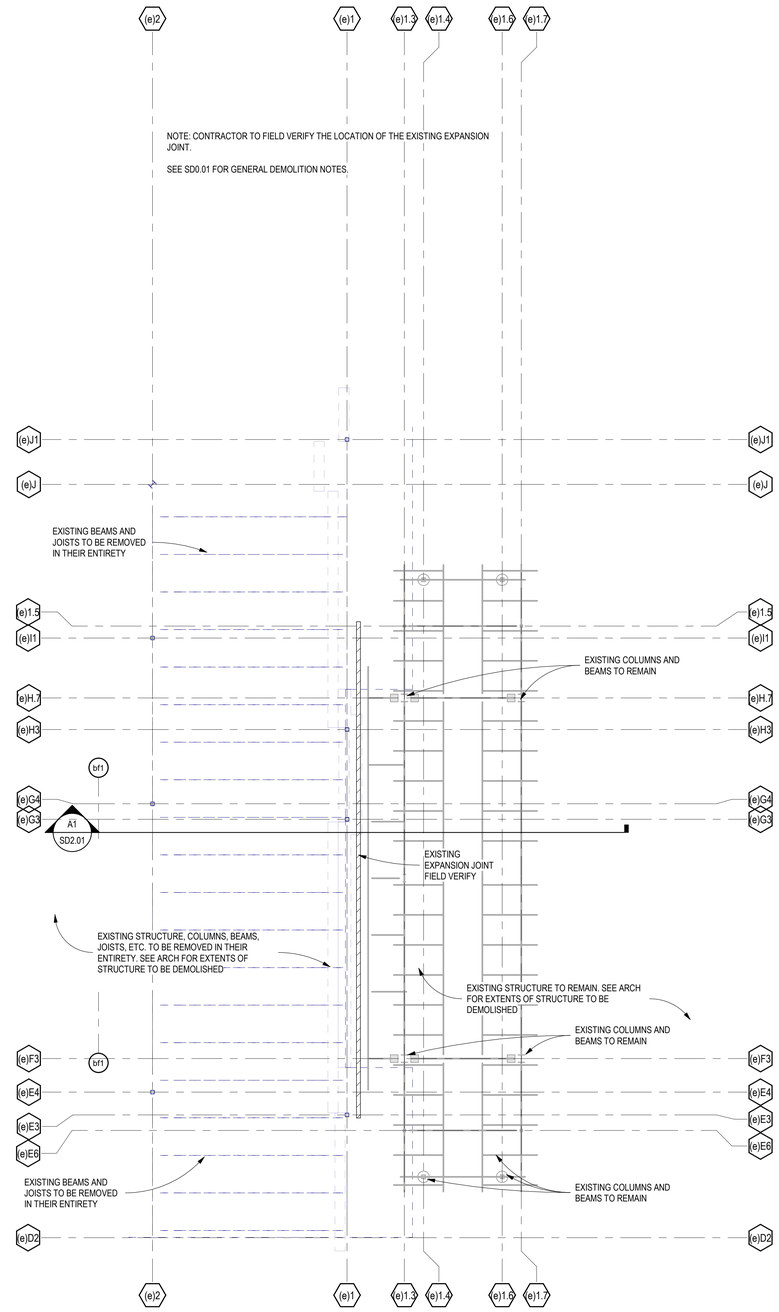

A3 EXISTING ROOF DEMOLITION PLAN

SCALE: 1/8" = 1'-0"

GENERAL SHEET NOTES

1. EXISTING CONSTRUCTION IS PER AVAILIBLE EXISTING DRAWINGS. ALL EXITING CONSTRUCTION AND DIMENSIONS SHALL BE VERIFIED PRIOR TO CONSTRUCTION. SHOULD CONDITIONS VARY FROM THOSE SHOWN, CONTRACT ENGINEER BEFORE PROCEEDING.
2. NO STRUCTURAL MEMBERS SHALL BE CUT OR REMOVED UNLESS SPECIFICALLY INDICATED ON THESE DRAWINGS. NOTIFY ARCHITECT AND ENGINEER IF CONDITIONS DIFFER FROM THOSE SHOWN HERE.

James R. Childers Architect, Inc.
45 South 4th Street
Fort Smith, AR 72901
479-783-2480
www.childersarchitect.com

PROFESSIONAL SEAL:

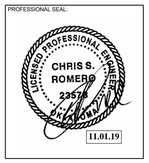

CONSULTANT LOGO:

Chavez-Grieves consulting engineers, inc.
4700 Lincoln Road NE, Suite 102 Albuquerque, NM 87109
505-344-4080 505-343-8759 (fax)

CLIENT:

THE CHEROKEE NATION
TRIBAL SEAL OF THE CHEROKEE NATION
SEPT. 6, 1839

WILMA P. MANKILLER HEALTH CENTER EXPANSION

STILWELL, OKLAHOMA

KEY PLAN:

PROJECT PHASE:

BID PACKAGE 01

REVISIONS		
#	DATE	DESCRIPTION

DATE:	JOB NUMBER:
11-01-19	18-01.01

SHEET NUMBER:

SD1.01

DEMOLITION PLANS - SECTOR 1

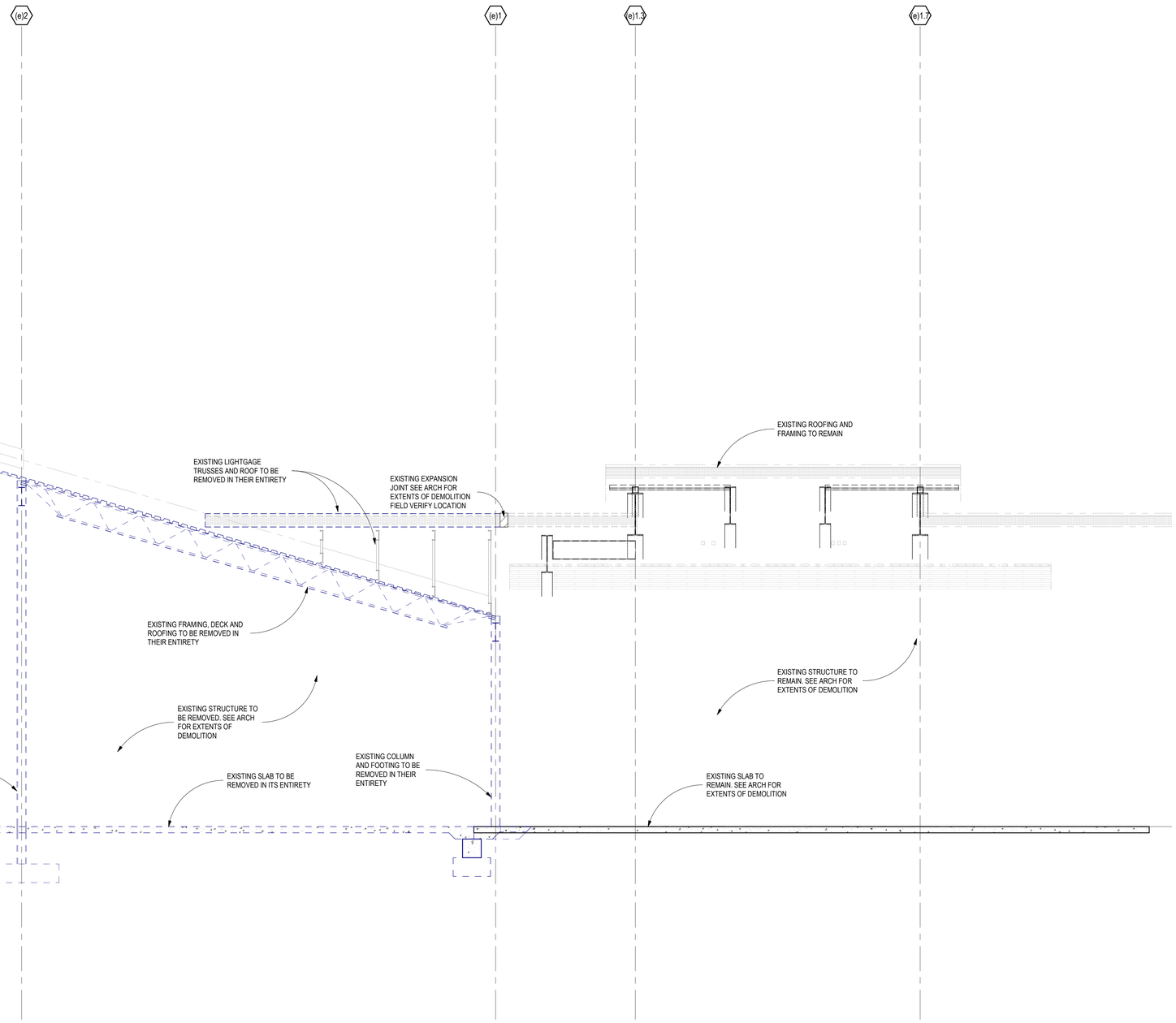

A1 EXISTING DEMOLITION SECTION

SCALE: 3/8" = 1'-0"

James R. Childers Architect, Inc.
45 South 4th Street
Fort Smith, AR 72901
479-783-2480
www.childersarchitect.com

PROFESSIONAL SEAL:



CONSULTANT LOGO:

Chavez-Grieves
consulting engineers, inc.
4700 Lincoln Road NE, Suite 152 Albuquerque, NM 87109
505-344-4080 505-343-8759 (fax)

CLIENT:



WILMA P. MANKILLER HEALTH CENTER EXPANSION

STILWELL, OKLAHOMA

KEY PLAN:

PROJECT PHASE:

BID PACKAGE 01

REVISIONS

#	DATE	DESCRIPTION

DATE: 11-01-19

JOB NUMBER: 18-01.01

SHEET NUMBER:

SD2.01

DEMOLITION SECTIONS

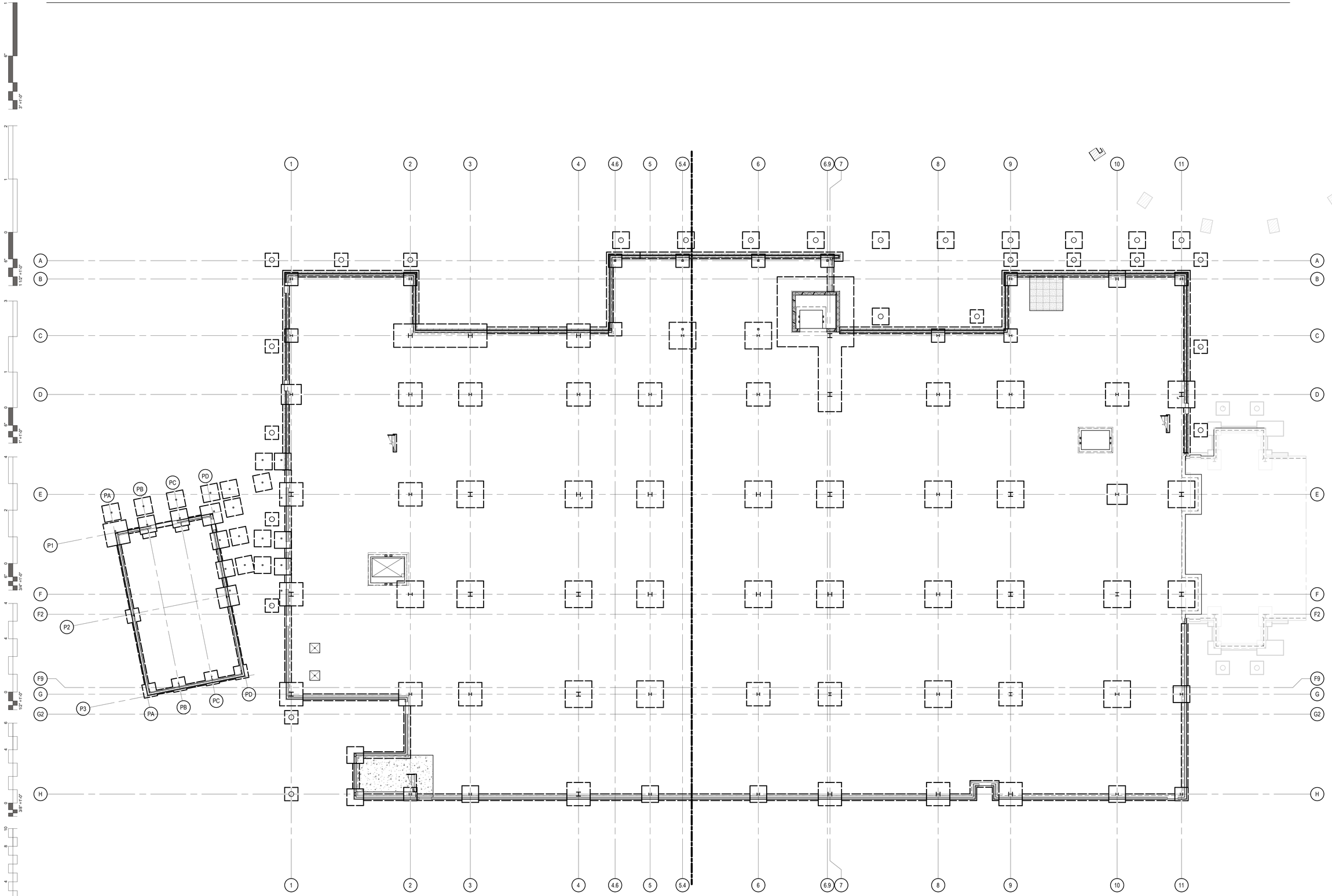

A1 **FOUNDATION PLAN - OVERALL**
SCALE: 3/32" = 1'-0"

James R. Childers Architect, Inc.
45 South 4th Street
Fort Smith, AR 72901
479-783-2480
www.childersarchitect.com

PROFESSIONAL SEAL:
CHRIS S. ROMERO 23576 REGISTERED PROFESSIONAL ENGINEER
11.01.19

CONSULTANT LOGO:
Chavez-Grieves consulting engineers, inc.
4700 Lincoln Road NE, Suite 102 Albuquerque, NM 87109
505-344-4080 · 505-343-8759 (fax)

CLIENT:
SEAL OF THE CHEROKEE NATION FEAT. SEPT. 6, 1839

WILMA P. MANKILLER HEALTH CENTER EXPANSION
STILWELL, OKLAHOMA

KEY PLAN:
02 01

PROJECT PHASE:
BID PACKAGE 01

REVISIONS		
#	DATE	DESCRIPTION

DATE:	JOB NUMBER:
11-01-19	18-01.01

SHEET NUMBER:
S1.00

OVERALL PLAN - FOUNDATION

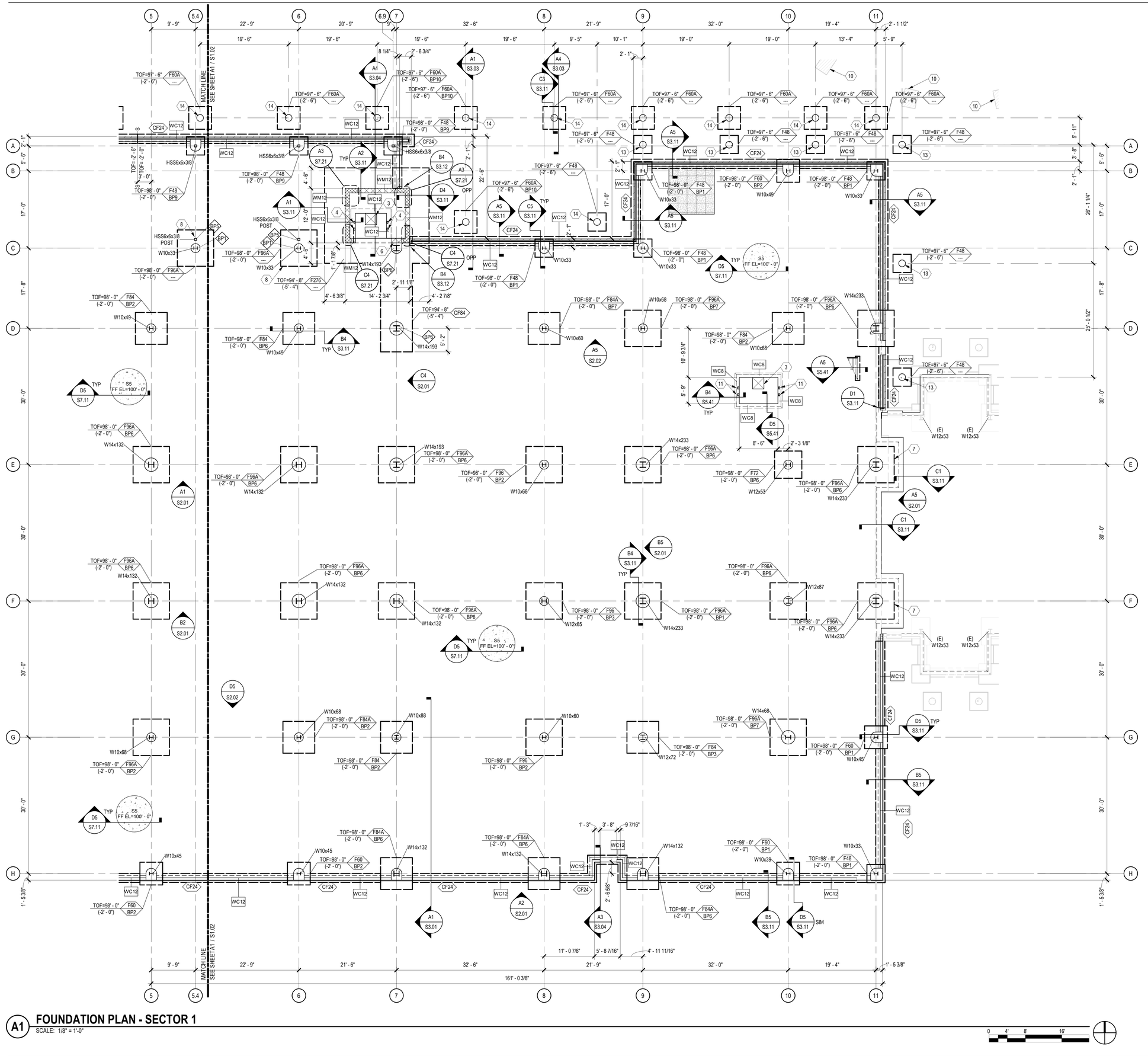

A1 FOUNDATION PLAN - SECTOR 1

SCALE: 1/8" = 1'-0"

GENERAL SHEET NOTES

1. SOME SHEET KEYNOTES MAY NOT APPLY TO THIS SHEET.
2. REFERENCE FINISH FLOOR ELEVATION 100'-0" = MEAN SEA FINISH FLOOR ELEVATION. SEE CIVIL DRAWINGS.
3. TOP OF FOOTING ELEVATION = 98' - 0" (-2' - 0"), UNLESS NOTED OTHERWISE ON PLAN.
4. NOTE TO CONTRACTOR: ENLARGED SLAB BLOCKOUTS MAY BE REQUIRED AT FRAME COLUMNS FOR MOMENT FRAME BASE PLATE CLEARANCE.
5. NOTE TO ERECTOR: LATERAL STABILITY OF THE STEEL FRAME IS DEPENDENT UPON THE MOMENT FRAMES. THE ERECTOR SHALL PROVIDE TEMPORARY BRACING OF THE STEEL FRAME IN ACCORDANCE WITH SECTION 7.10 OF THE AISC CODE OF STANDARD PRACTICES.
6. DIMENSIONS ARE TO THE FACE OF STUD UNLESS NOTED OTHERWISE.
7. SEE ARCHITECTURAL DRAWINGS FOR MASONRY DIMENSIONS NOT SHOWN.
8. EXISTING CONSTRUCTION IS PER AVAILABLE EXISTING DRAWINGS. ALL EXISTING CONSTRUCTION AND DIMENSIONS SHALL BE VERIFIED PRIOR TO CONSTRUCTION. SHOULD CONDITIONS VARY FROM THOSE SHOWN, CONTACT ENGINEER BEFORE PROCEEDING.
9. PROVIDE SLAB JOINTS AT 10'-0" ON CENTER MAXIMUM. THE AREA OF THE CONTROL JOINT SHALL NOT EXCEED A 2:1 RATIO. CONTROL JOINTS SHALL BE LOCATED AT COLUMN LINES WHERE THE LAYOUT PERMITS. AT RE-ENTRANT CORNERS THAT DO NOT HAVE CONTROL JOINTS, PROVIDE 2-#4 x 3'-0" DIAGONAL TO THE RE-ENTRANT CORNER.
10. STRUCTURAL COLD FORMED METAL STUDS SHALL BE 6" WIDE UNLESS NOTED OTHERWISE. STUD THICKNESS AND SPACING BY OTHERS.
11. SEE SHEET S7.00 SERIES SHEETS FOR TYPICAL FOUNDATION SECTIONS AND DETAILS.
12. SEE SHEET S6.01 FOR SCHEDULES.

SHEET KEYNOTE

1. FLOOR DRAIN. SLOPE SLAB TO DRAIN 1/8" PER FOOT. COORDINATE EXACT SIZE AND LOCATION WITH ARCHITECTURAL AND MECHANICAL DRAWINGS.
2. POST AND FOUNDATION AS REQUIRED FOR STAIR SUPPORT. STAIR ENGINEER TO PROVIDE REQUIRED LOADS AND LOCATIONS.
3. ELEVATOR SUMP PIT. COORDINATE EXACT SIZE AND LOCATION WITH ELEVATOR MANUFACTURER. SEE A4 / S5.41
4. HSS6x4x1/2 ELEVATOR RAIL SUPPORT POST. COORDINATE LOCATION AND SPACING WITH ELEVATOR MANUFACTURER. SEE B4 / S5.41
5. PRE-ENGINEERED METAL BUILDING STEEL AND ANCHORAGE BY OTHERS. CONTRACTOR TO CONFIRM LOCATIONS OF FOUNDATIONS WITH FINAL PRE-ENGINEERED METAL BUILDING SHOP DRAWINGS.
6. NOTCH MASONRY AS REQUIRED TO FACILITATE BASEPLATE INSTALLATION. STEP BOND BEAM AT THIS LOCATION..
7. CUT AND REMOVE EXISTING SLAB AS REQUIRED TO PLACE NEW FOOTING. NEW SLAB TO POUR UP TO REMAINING SLAB.
8. CENTER FOOTING ON GRID C.
9. F60A PRE-MANUFACTURED SUNSHADE CONCRETE FOOTING. TOP OF FOOTING = 99' - 0" (-1' - 0"). SEE SHEET S6.01 FOR FOOTING SCHEDULE. COORDINATE FINAL LOCATION WITH SUNSHADE MANUFACTURER.
10. EXISTING CANOPY. SEE ARCHITECTURAL DEMOLITION PLANS FOR EXTENT OF DEMOLITION.
11. HSS8x6x1/2 ELEVATOR SUPPORT POST. COORDINATE EXACT LOCATION AND SPACING WITH ELEVATOR MANUFACTURER. SEE B4 / S5.41, D3 / S5.41, A2 / S5.41, B2 / S5.41, AND C2 / S5.41
12. 1 1/2" RECESSED SLAB AT ADA SHOWER. COORDINATE EXACT SIZE, LOCATION, AND SLOPE REQUIREMENTS WITH ARCHITECTURAL DRAWINGS. SEE C4 / S7.11
13. 18" DIAMETER PRECAST CONCRETE COLUMN BY OTHERS.
14. 18" DIAMETER PRECAST CONCRETE CANOPY COLUMN BY OTHERS.

James R. Childers Architect, Inc.
45 South 4th Street
Fort Smith, AR 72901
479-783-2480
www.childersarchitect.com

PROFESSIONAL SEAL:

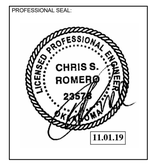

CONSULTANT LOGO:

Chavez-Grieves
consulting engineers, inc.
4700 Lincoln Road NE, Suite 102 Albuquerque, NM 87109
505-344-4080 505-343-8759 (fax)

CLIENT:

THE CHEROKEE NATION
TRIBAL SEAL
SEPT. 6, 1839

WILMA P. MANKILLER HEALTH CENTER EXPANSION

STILWELL, OKLAHOMA

KEY PLAN:

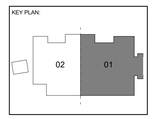

PROJECT PHASE:

BID PACKAGE 01

REVISIONS		
#	DATE	DESCRIPTION

DATE:	JOB NUMBER:
11-01-19	18-01.01

SHEET NUMBER:

S1.01

FOUNDATION PLAN SECTOR 1

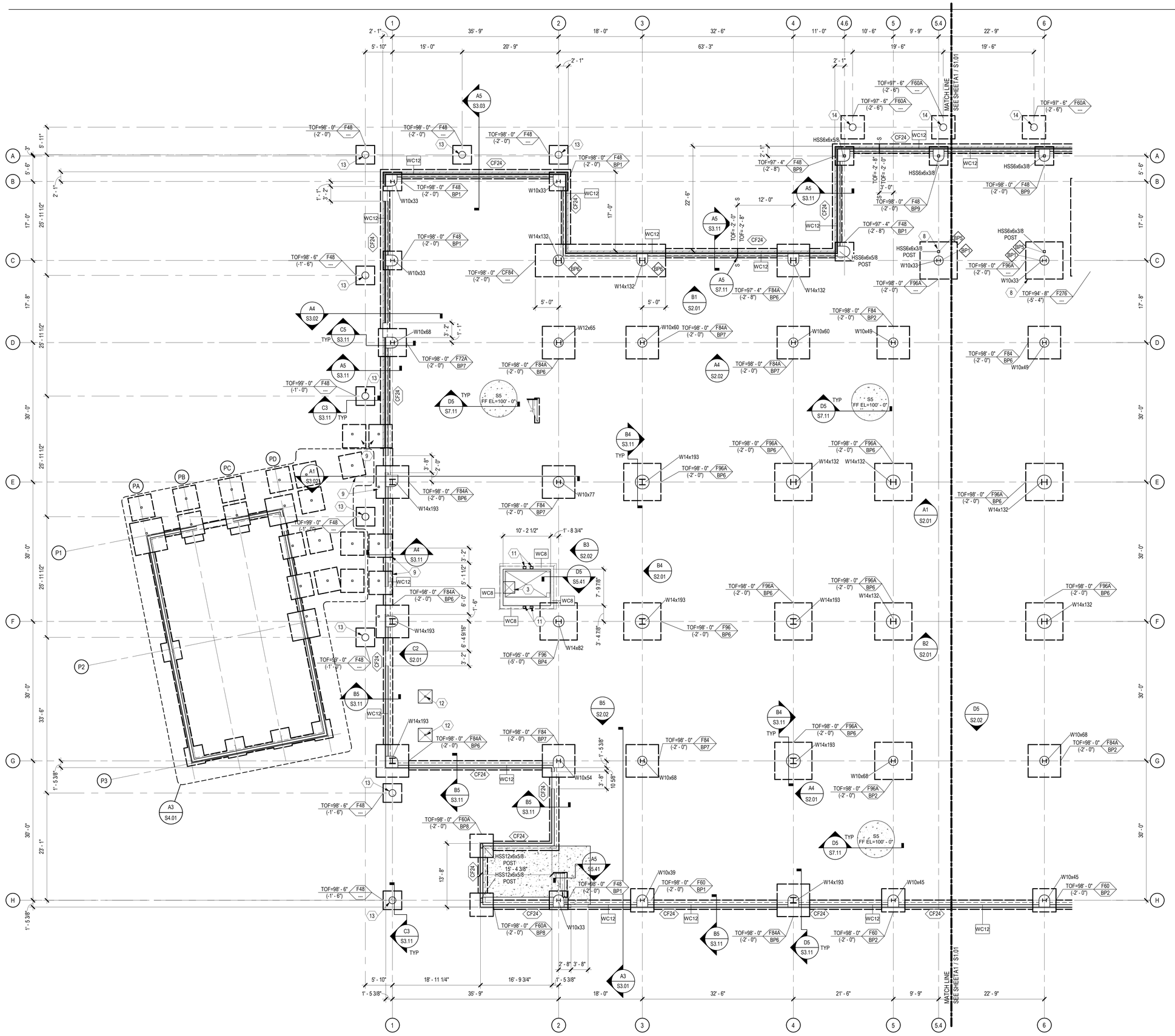

A1 FOUNDATION PLAN - SECTOR 2

SCALE: 1/8" = 1'-0"

GENERAL SHEET NOTES

1. SOME SHEET KEYNOTES MAY NOT APPLY TO THIS SHEET.
2. REFERENCE FINISH FLOOR ELEVATION 100'-0" = MEAN SEA FINISH FLOOR ELEVATION. SEE CIVIL DRAWINGS.
3. TOP OF FOOTING ELEVATION = 98' - 0" (-2' - 0"), UNLESS NOTED OTHERWISE ON PLAN.
4. NOTE TO CONTRACTOR: ENLARGED SLAB BLOCKOUTS MAY BE REQUIRED AT FRAME COLUMNS FOR MOMENT FRAME BASE PLATE CLEARANCE.
5. NOTE TO ERECTOR: LATERAL STABILITY OF THE STEEL FRAME IS DEPENDENT UPON THE MOMENT FRAMES. THE ERECTOR SHALL PROVIDE TEMPORARY BRACING OF THE STEEL FRAME IN ACCORDANCE WITH SECTION 7.10 OF THE AISC CODE OF STANDARD PRACTICES.
6. DIMENSIONS ARE TO THE FACE OF STUD UNLESS NOTED OTHERWISE.
7. SEE ARCHITECTURAL DRAWINGS FOR MASONRY DIMENSIONS NOT SHOWN.
8. EXISTING CONSTRUCTION IS PER AVAILABLE EXISTING DRAWINGS. ALL EXISTING CONSTRUCTION AND DIMENSIONS SHALL BE VERIFIED PRIOR TO CONSTRUCTION. SHOULD CONDITIONS VARY FROM THOSE SHOWN, CONTACT ENGINEER BEFORE PROCEEDING.
9. PROVIDE SLAB JOINTS AT 10'-0" ON CENTER MAXIMUM. THE AREA OF THE CONTROL JOINT SHALL NOT EXCEED A 2:1 RATIO. CONTROL JOINTS SHALL BE LOCATED AT COLUMN LINES WHERE THE LAYOUT PERMITS. AT RE-ENTRANT CORNERS THAT DO NOT HAVE CONTROL JOINTS, PROVIDE 2-#4 x 3'-0" DIAGONAL TO THE RE-ENTRANT CORNER.
10. STRUCTURAL COLD FORMED METAL STUDS SHALL BE 6" WIDE UNLESS NOTED OTHERWISE. STUD THICKNESS AND SPACING BY OTHERS.
11. SEE SHEET S7.00 SERIES SHEETS FOR TYPICAL FOUNDATION SECTIONS AND DETAILS.
12. SEE SHEET S6.01 FOR SCHEDULES.

SHEET KEYNOTE

1. FLOOR DRAIN. SLOPE SLAB TO DRAIN 1/8" PER FOOT. COORDINATE EXACT SIZE AND LOCATION WITH ARCHITECTURAL AND MECHANICAL DRAWINGS.
2. POST AND FOUNDATION AS REQUIRED FOR STAIR SUPPORT. STAIR ENGINEER TO PROVIDE REQUIRED LOADS AND LOCATIONS.
3. ELEVATOR SUMP PIT. COORDINATE EXACT SIZE AND LOCATION WITH ELEVATOR MANUFACTURER. SEE A4 / S5.41
4. HSS6x4x1/2 ELEVATOR RAIL SUPPORT POST. COORDINATE LOCATION AND SPACING WITH ELEVATOR MANUFACTURER. SEE B4 / S5.41
5. PRE-ENGINEERED METAL BUILDING STEEL AND ANCHORAGE BY OTHERS. CONTRACTOR TO CONFIRM LOCATIONS OF FOUNDATIONS WITH FINAL PRE-ENGINEERED METAL BUILDING SHOP DRAWINGS.
6. NOTCH MASONRY AS REQUIRED TO FACILITATE BASEPLATE INSTALLATION. STEP BOND BEAM AT THIS LOCATION..
7. CUT AND REMOVE EXISTING SLAB AS REQUIRED TO PLACE NEW FOOTING. NEW SLAB TO POUR UP TO REMAINING SLAB.
8. CENTER FOOTING ON GRID C.
9. F60A PRE-MANUFACTURED SUNSHADE CONCRETE FOOTING. TOP OF FOOTING = 99' - 0" (-1' - 0"). SEE SHEET S6.01 FOR FOOTING SCHEDULE. COORDINATE FINAL LOCATION WITH SUNSHADE MANUFACTURER.
10. EXISTING CANOPY. SEE ARCHITECTURAL DEMOLITION PLANS FOR EXTENT OF DEMOLITION.
11. HSS8x6x1/2 ELEVATOR SUPPORT POST. COORDINATE EXACT LOCATION AND SPACING WITH ELEVATOR MANUFACTURER. SEE B4 / S5.41, D3 / S5.41, A2 / S5.41, B2 / S5.41, AND C2 / S5.41
12. 1 1/2" RECESSED SLAB AT ADA SHOWER. COORDINATE EXACT SIZE, LOCATION, AND SLOPE REQUIREMENTS WITH ARCHITECTURAL DRAWINGS. SEE C4 / S7.11
13. 18" DIAMETER PRECAST CONCRETE COLUMN BY OTHERS.
14. 18" DIAMETER PRECAST CONCRETE CANOPY COLUMN BY OTHERS.

James R. Childers Architect, Inc.
45 South 4th Street
Fort Smith, AR 72901
479-783-2480
www.childersarchitect.com

PROFESSIONAL SEAL:

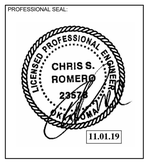

CONSULTANT LOGO:

Chavez-Grieves consulting engineers, inc.
4700 Lincoln Road NE, Suite 102 Albuquerque, NM 87109
505-344-4080 505-343-8759 (fax)

CLIENT:

THE CHEROKEE NATION
TRIBAL SEAL
SEPT. 6, 1839

WILMA P. MANKILLER HEALTH CENTER EXPANSION

STILWELL, OKLAHOMA

KEY PLAN:

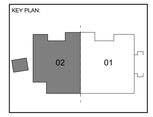

PROJECT PHASE:

BID PACKAGE 01

REVISIONS		
#	DATE	DESCRIPTION

DATE:	JOB NUMBER:
11-01-19	18-01.01

SHEET NUMBER:

S1.02

FOUNDATION PLAN SECTOR 2

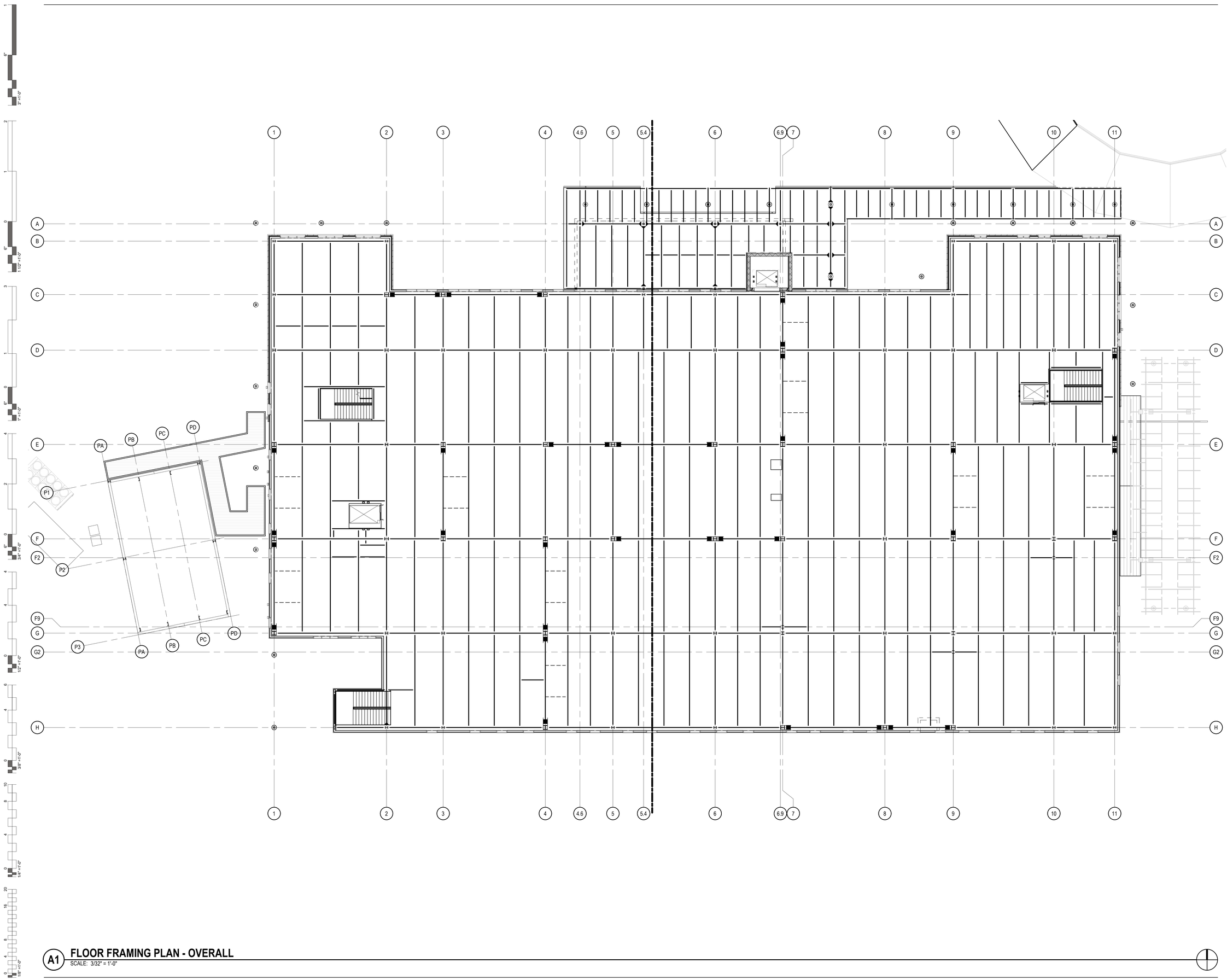

A1 **FLOOR FRAMING PLAN - OVERALL**
SCALE: 3/32" = 1'-0"

James R. Childers
Architect, Inc.
45 South 4th Street
Fort Smith, AR 72901
479-783-2480
www.childersarchitect.com

PROFESSIONAL SEAL:
LICENSED PROFESSIONAL ENGINEER
CHRIS S. ROMERO
23576
OKLAHOMA
11.01.19

CONSULTANT LOGO:
Chavez-Grieves
consulting engineers, inc.
4700 Lincoln Road NE, Suite 102 Albuquerque, NM 87109
505-344-4080 · 505-343-8759 (fax)

CLIENT:
THE CHEROKEE NATION
TRUST OF THE
SEPT. 6, 1839

WILMA P. MANKILLER HEALTH CENTER EXPANSION
STILWELL, OKLAHOMA

KEY PLAN:
02
01

PROJECT PHASE:
BID PACKAGE 01

REVISIONS

#	DATE	DESCRIPTION

DATE: 11-01-19
JOB NUMBER: 18-01.01
SHEET NUMBER: S1.10
OVERALL PLAN - FLOOR FRAMING

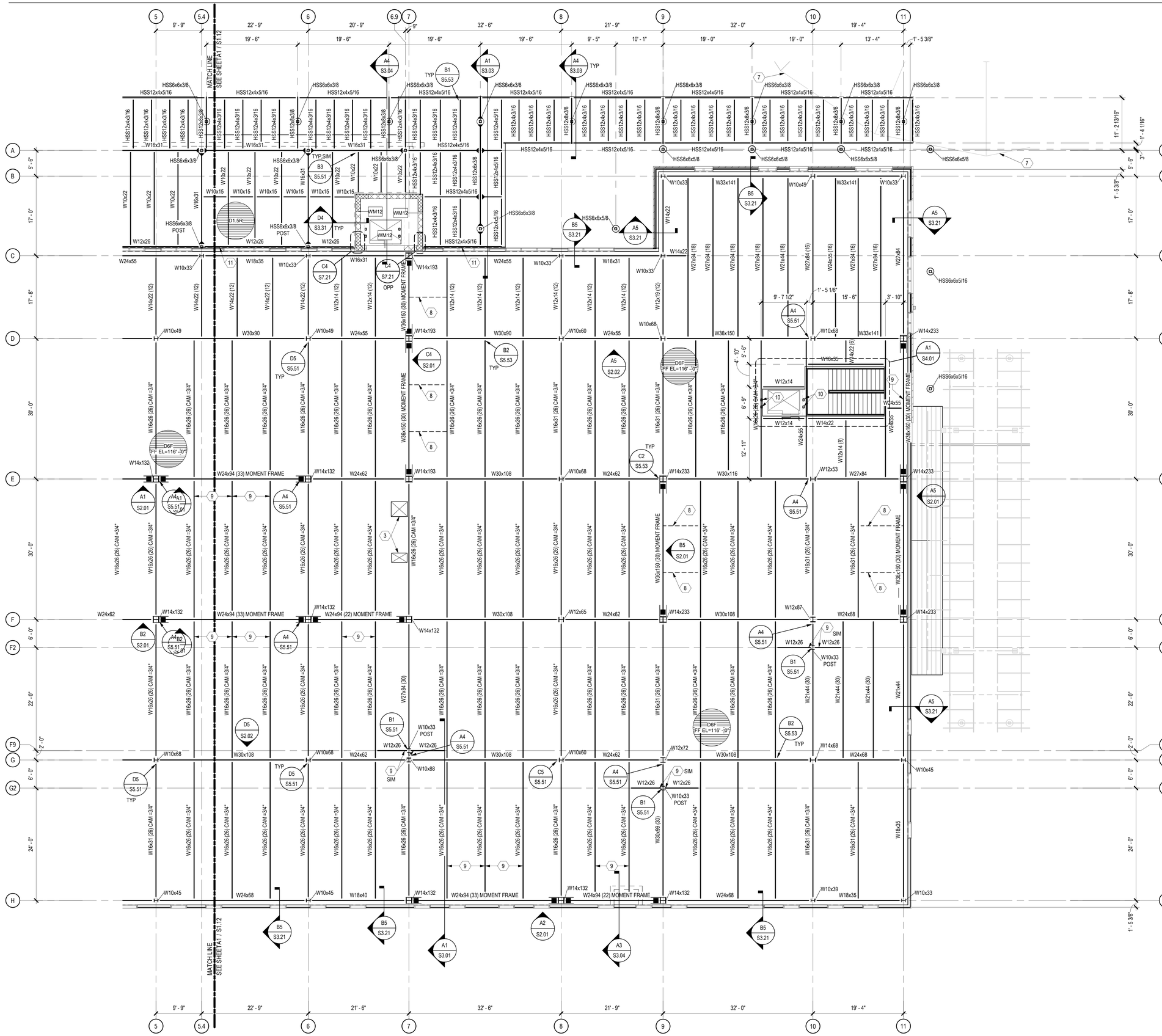
MATCH LINE SEE SHEET A1 / S1.12
W24x94 (33) MOMENT FRAME
W24x94 (22) MOMENT FRAME
W36x150 (30) MOMENT FRAME
W36x160 (30) MOMENT FRAME
D6F FF EL=116' -0"
D1.5R
WM12
W16x26 (26) CAM =3/4"
W16x31 (26) CAM =3/4"
W16x35 (26) CAM =3/4"
W16x36 (26) CAM =3/4"
W16x40 (26) CAM =3/4"
W16x45 (26) CAM =3/4"
W16x50 (26) CAM =3/4"
W16x57 (26) CAM =3/4"
W16x67 (26) CAM =3/4"
W16x77 (26) CAM =3/4"
W16x89 (26) CAM =3/4"
W16x100 (26) CAM =3/4"
W16x26 (26) CAM =3/4"
W16x31 (26) CAM =3/4"
W16x36 (26) CAM =3/4"
W16x40 (26) CAM =3/4"
W16x45 (26) CAM =3/4"
W16x50 (26) CAM =3/4"
W16x57 (26) CAM =3/4"
W16x67 (26) CAM =3/4"
W16x77 (26) CAM =3/4"
W16x89 (26) CAM =3/4"
W16x100 (26) CAM =3/4"
W30x99 (30)
W18x35
W18x40
W21x44 (30)
W27x84 (30)
W24x55
W24x62
W24x68
W30x90
W30x108
W30x116
W30x150
W30x160
W36x150
W36x160
W14x132
W14x193
W14x233
W14x68
W14x99
W14x109
W14x145
W14x176
W14x211
W14x257
W14x283
W14x311
W14x370
W14x426
W14x455
W14x500
W14x550
W14x605
W14x665
W14x730
W14x808
W14x873
W14x932
W14x1000
W14x1082
W14x1176
W14x1269
W14x1370
W14x1500
W14x1584
W14x1730
W14x1875
W14x2053
W14x2257
W14x2445
W14x2668
W14x2851
W14x3090
W14x3311
W14x3547
W14x3821
W14x4082
W14x4398
W14x4730
W14x5026
W14x5357
W14x5740
W14x6176
W14x6551
W14x6968
W14x7398
W14x7867
W14x8398
W14x8932
W14x9455
W14x10000
W14x10730
W14x11455
W14x12257
W14x13000
W14x13867
W14x14730
W14x15730
W14x16730
W14x17730
W14x18730
W14x19730
W14x20730
W14x21730
W14x22730
W14x23730
W14x24730
W14x25730
W14x26730
W14x27730
W14x28730
W14x29730
W14x30730
W14x31730
W14x32730
W14x33730
W14x34730
W14x35730
W14x36730
W14x37730
W14x38730
W14x39730
W14x40730
W14x41730
W14x42730
W14x43730
W14x44730
W14x45730
W14x46730
W14x47730
W14x48730
W14x49730
W14x50730
W14x51730
W14x52730
W14x53730
W14x54730
W14x55730
W14x56730
W14x57730
W14x58730
W14x59730
W14x60730
W14x61730
W14x62730
W14x63730
W14x64730
W14x65730
W14x66730
W14x67730
W14x68730
W14x69730
W14x70730
W14x71730
W14x72730
W14x73730
W14x74730
W14x75730
W14x76730
W14x77730
W14x78730
W14x79730
W14x80730
W14x81730
W14x82730
W14x83730
W14x84730
W14x85730
W14x86730
W14x87730
W14x88730
W14x89730
W14x90730
W14x91730
W14x92730
W14x93730
W14x94730
W14x95730
W14x96730
W14x97730
W14x98730
W14x99730
W14x100730
W14x101730
W14x102730
W14x103730
W14x104730
W14x105730
W14x106730
W14x107730
W14x108730
W14x109730
W14x110730
W14x111730
W14x112730
W14x113730
W14x114730
W14x115730
W14x116730
W14x117730
W14x118730
W14x119730
W14x120730
W14x121730
W14x122730
W14x123730
W14x124730
W14x125730
W14x126730
W14x127730
W14x128730
W14x129730
W14x130730
W14x131730
W14x132730
W14x133730
W14x134730
W14x135730
W14x136730
W14x137730
W14x138730
W14x139730
W14x140730
W14x141730
W14x142730
W14x143730
W14x144730
W14x145730
W14x146730
W14x147730
W14x148730
W14x149730
W14x150730
W14x151730
W14x152730
W14x153730
W14x154730
W14x155730
W14x156730
W14x157730
W14x158730
W14x159730
W14x160730
W14x161730
W14x162730
W14x163730
W14x164730
W14x165730
W14x166730
W14x167730
W14x168730
W14x169730
W14x170730
W14x171730
W14x172730
W14x173730
W14x174730
W14x175730
W14x176730
W14x177730
W14x178730
W14x179730
W14x180730
W14x181730
W14x182730
W14x183730
W14x184730
W14x185730
W14x186730
W14x187730
W14x188730
W14x189730
W14x190730
W14x191730
W14x192730
W14x193730
W14x194730
W14x195730
W14x196730
W14x197730
W14x198730
W14x199730
W14x200730
W14x201730
W14x202730
W14x203730
W14x204730
W14x205730
W14x206730
W14x207730
W14x208730
W14x209730
W14x210730
W14x211730
W14x212730
W14x213730
W14x214730
W14x215730
W14x216730
W14x217730
W14x218730
W14x219730
W14x220730
W14x221730
W14x222730
W14x223730
W14x224730
W14x225730
W14x226730
W14x227730
W14x228730
W14x229730
W14x230730
W14x231730
W14x232730
W14x233730
W14x234730
W14x235730
W14x236730
W14x237730
W14x238730
W14x239730
W14x240730
W14x241730
W14x242730
W14x243730
W14x244730
W14x245730
W14x246730
W14x247730
W14x248730
W14x249730
W14x250730
W14x251730
W14x252730
W14x253730
W14x254730
W14x255730
W14x256730
W14x257730
W14x258730
W14x259730
W14x260730
W14x261730
W14x262730
W14x263730
W14x264730
W14x265730
W14x266730
W14x267730
W14x268730
W14x269730
W14x270730
W14x271730
W14x272730
W14x273730
W14x274730
W14x275730
W14x276730
W14x277730
W14x278730
W14x279730
W14x280730
W14x281730
W14x282730
W14x283730
W14x284730
W14x285730
W14x286730
W14x287730
W14x288730
W14x289730
W14x290730
W14x291730
W14x292730
W14x293730
W14x294730
W14x295730
W14x296730
W14x297730
W14x298730
W14x299730
W14x300730
W14x301730
W14x302730
W14x303730
W14x304730
W14x305730
W14x306730
W14x307730
W14x308730
W14x309730
W14x310730
W14x311730
W14x312730
W14x313730
W14x314730
W14x315730
W14x316730
W14x317730
W14x318730
W14x319730
W14x320730
W14x321730
W14x322730
W14x323730
W14x324730
W14x325730
W14x326730
W14x327730
W14x328730
W14x329730
W14x330730
W14x331730
W14x332730
W14x333730
W14x334730
W14x335730
W14x336730
W14x337730
W14x338730
W14x339730
W14x340730
W14x341730
W14x342730
W14x343730
W14x344730
W14x345730
W14x346730
W14x347730
W14x348730
W14x349730
W14x350730
W14x351730
W14x352730
W14x353730
W14x354730
W14x355730
W14x356730
W14x357730
W14x358730
W14x359730
W14x360730
W14x361730
W14x362730
W14x363730
W14x364730
W14x365730
W14x366730
W14x367730
W14x368730
W14x369730
W14x370730
W14x371730
W14x372730
W14x373730
W14x374730
W14x375730
W14x376730
W14x377730
W14x378730
W14x379730
W14x380730
W14x381730
W14x382730
W14x383730
W14x384730
W14x385730
W14x386730
W14x387730
W14x388730
W14x389730
W14x390730
W14x391730
W14x392730
W14x393730
W14x394730
W14x395730
W14x396730
W14x397730
W14x398730
W14x399730
W14x400730
W14x401730
W14x402730
W14x403730
W14x404730
W14x405730
W14x406730
W14x407730
W14x408730
W14x409730
W14x410730
W14x411730
W14x412730
W14x413730
W14x414730
W14x415730
W14x416730
W14x417730
W14x418730
W14x419730
W14x420730
W14x421730
W14x422730
W14x423730
W14x424730
W14x425730
W14x426730
W14x427730
W14x428730
W14x429730
W14x430730
W14x431730
W14x432730
W14x433730
W14x434730
W14x435730
W14x436730
W14x437730
W14x438730
W14x439730
W14x440730
W14x441730
W14x442730
W14x443730
W14x444730
W14x445730
W14x446730
W14x447730
W14x448730
W14x449730
W14x450730
W14x451730
W14x452730
W14x453730
W14x454730
W14x455730
W14x456730
W14x457730
W14x458730
W14x459730
W14x460730
W14x461730
W14x462730
W14x463730
W14x464730
W14x465730
W14x466730
W14x467730
W14x468730
W14x469730
W14x470730
W14x471730
W14x472730
W14x473730
W14x474730
W14x475730
W14x476730
W14x477730
W14x478730
W14x479730
W14x480730
W14x481730
W14x482730
W14x483730
W14x484730
W14x485730
W14x486730
W14x487730
W14x488730
W14x489730
W14x490730
W14x491730
W14x492730
W14x493730
W14x494730
W14x495730
W14x496730
W14x497730
W14x498730
W14x499730
W14x500730
W14x501730
W14x502730
W14x503730
W14x504730
W14x505730
W14x506730
W14x507730
W14x508730
W14x509730
W14x510730
W14x511730
W14x512730
W14x513730
W14x514730
W14x515730
W14x516730
W14x517730
W14x518730
W14x519730
W14x520730
W14x521730
W14x522730
W14x523730
W14x524730
W14x525730
W14x526730
W14x527730
W14x528730
W14x529730
W14x530730
W14x531730
W14x532730
W14x533730
W14x534730
W14x535730
W14x536730
W14x537730
W14x538730
W14x539730
W14x540730
W14x541730
W14x542730
W14x543730
W14x544730
W14x545730
W14x546730
W14x547730
W14x548730
W14x549730
W14x550730
W14x551730
W14x552730
W14x553730
W14x554730
W14x555730
W14x556730
W14x557730
W14x558730
W14x559730
W14x560730
W14x561730
W14x562730
W14x563730
W14x564730
W14x565730
W14x566730
W14x567730
W14x568730
W14x569730
W14x570730
W14x571730
W14x572730
W14x573730
W14x574730
W14x575730
W14x576730
W14x577730
W14x578730
W14x579730
W14x580730
W14x581730
W14x582730
W14x583730
W14x584730
W14x585730
W14x586730
W14x587730
W14x588730
W14x589730
W14x590730
W14x591730
W14x592730
W14x593730
W14x594730
W14x595730
W14x596730
W14x597730
W14x598730
W14x599730
W14x600730
W14x601730
W14x602730
W14x603730
W14x604730
W14x605730
W14x606730
W14x607730
W14x608730
W14x609730
W14x610730
W14x611730
W14x612730
W14x613730
W14x614730
W14x615730
W14x616730
W14x617730
W14x618730
W14x619730
W14x620730
W14x621730
W14x622730
W14x623730
W14x624730
W14x625730
W14x626730
W14x627730
W14x628730
W14x629730
W14x630730
W14x631730
W14x632730
W14x633730
W14x634730
W14x635730
W14x636730
W14x637730
W14x638730
W14x639730
W14x640730
W14x641730
W14x642730
W14x643730
W14x644730
W14x645730
W14x646730
W14x647730
W14x648730
W14x649730
W14x650730
W14x651730
W14x652730
W14x653730
W14x654730
W14x655730
W14x656730
W14x657730
W14x658730
W14x659730
W14x660730
W14x661730
W14x662730
W14x663730
W14x664730
W14x665730
W14x666730
W14x667730
W14x668730
W14x669730
W14x670730
W14x671730
W14x672730
W14x673730
W14x674730
W14x675730
W14x676730
W14x677730
W14x678730
W14x679730
W14x680730
W14x681730
W14x682730
W14x683730
W14x684730
W14x685730
W14x686730
W14x687730
W14x688730
W14x689730
W14x690730
W14x691730
W14x692730
W14x693730
W14x694730
W14x695730
W14x696730
W14x697730
W14x698730
W14x699730
W14x700730
W14x701730
W14x702730
W14x703730
W14x704730
W14x705730
W14x706730
W14x707730
W14x708730
W14x709730
W14x710730
W14x711730
W14x712730
W14x713730
W14x714730
W14x715730
W14x716730
W14x717730
W14x718730
W14x719730
W14x720730
W14x721730
W14x722730
W14x723730
W14x724730
W14x725730
W14x726730
W14x727730
W14x728730
W14x729730
W14x730730
W14x731730
W14x732730
W14x733730
W14x734730
W14x735730
W14x736730
W14x737730
W14x738730
W14x739730
W14x740730
W14x741730
W14x742730
W14x743730
W14x744730
W14x745730
W14x746730
W14x747730
W14x748730
W14x749730
W14x750730
W14x751730
W14x752730
W14x753730
W14x754730
W14x755730
W14x756730
W14x757730
W14x758730
W14x759730
W14x760730
W14x761730
W14x762730
W14x763730
W14x764730
W14x765730
W14x766730
W14x767730
W14x768730
W14x769730
W14x770730
W14x771730
W14x772730
W14x773730
W14x774730
W14x775730
W14x776730
W14x777730
W14x778730
W14x779730
W14x780730
W14x781730
W14x782730
W14x783730
W14x784730
W14x785730
W14x786730
W14x787730
W14x788730
W14x789730
W14x790730
W14x791730
W14x792730
W14x793730
W14x794730
W14x795730
W14x796730
W14x797730
W14x798730
W14x799730
W14x800730
W14x801730
W14x802730
W14x803730
W14x804730
W14x805730
W14x806730
W14x807730
W14x808730
W14x809730
W14x810730
W14x811730
W14x812730
W14x813730
W14x814730
W14x815730
W14x816730
W14x817730
W14x818730
W14x819730
W14x820730
W14x821730
W14x822730
W14x823730
W14x824730
W14x825730
W14x826730
W14x827730
W14x828730
W14x829730
W14x830730
W14x831730
W14x832730
W14x833730
W14x834730
W14x835730
W14x836730
W14x837730
W14x838730
W14x839730
W14x840730
W14x841730
W14x842730
W14x843730
W14x844730
W14x845730
W14x846730
W14x847730
W14x848730
W14x849730
W14x850730
W14x851730
W14x852730
W14x853730
W14x854730
W14x855730
W14x856730
W14x857730
W14x858730
W14x859730
W14x860730
W14x861730
W14x862730
W14x863730
W14x864730
W14x865730
W14x866730
W14x867730
W14x868730
W14x869730
W14x870730
W14x871730
W14x872730
W14x873730
W14x874730
W14x875730
W14x876730
W14x877730
W14x878730
W14x879730
W14x880730
W14x881730
W14x882730
W14x883730
W14x884730
W14x885730
W14x886730
W14x887730
W14x888730
W14x889730
W14x890730
W14x891730
W14x892730
W14x893730
W14x894730
W14x895730
W14x896730
W14x897730
W14x898730
W14x899730
W14x900730
W14x901730
W14x902730
W14x903730
W14x904730
W14x905730
W14x906730
W14x907730
W14x908730
W14x909730
W14x910730
W14x911730
W14x912730
W14x913730
W14x914730
W14x915730
W14x916730
W14x917730
W14x918730
W14x919730
W14x920730
W14x921730
W14x922730
W14x923730
W14x924730
W14x925730
W14x926730
W14x927730
W14x928730
W14x929730
W14x930730
W14x931730
W14x932730
W14x933730
W14x934730
W14x935730
W14x936730
W14x937730
W14x938730
W14x939730
W14x940730
W14x941730
W14x942730
W14x943730
W14x944730
W14x945730
W14x946730
W14x947730
W14x948730
W14x949730
W14x950730
W14x951730
W14x952730
W14x953730
W14x954730
W14x955730
W14x956730
W14x957730
W14x958730
W14x959730
W14x960730
W14x961730
W14x962730
W14x963730
W14x964730
W14x965730
W14x966730
W14x967730
W14x968730
W14x969730
W14x970730
W14x971730
W14x972730
W14x973730
W14x974730
W14x975730
W14x976730
W14x977730
W14x978730
W14x979730
W14x980730
W14x981730
W14x982730
W14x983730
W14x984730
W14x985730
W14x986730
W14x987730
W14x988730
W14x989730
W14x990730
W14x991730
W14x992730
W14x993730
W14x994730
W14x995730
W14x996730
W14x997730
W14x998730
W14x999730
W14x1000730
W14x1001730
W14x1002730
W14x1003730
W14x1004730
W14x1005730
W14x1006730
W14x1007730
W14x1008730
W14x1009730
W14x1010730
W14x1011730
W14x1012730
W14x1013730
W14x1014730
W14x1015730
W14x1016730
W14x1017730
W14x1018730
W14x1019730
W14x1020730
W14x1021730
W14x1022730
W14x1023730
W14x1024730
W14x1025730
W14x1026730
W14x1027730
W14x1028730
W14x1029730
W14x1030730
W14x1031730
W14x1032730
W14x1033730
W14x1034730
W14x1035730
W14x1036730
W14x1037730
W14x1038730
W14x1039730
W14x1040730
W14x1041730
W14x1042730
W14x1043730
W14x1044730
W14x1045730
W14x1046730
W14x1047730
W14x1048730
W14x1049730
W14x1050730
W14x1051730
W14x1052730
W14x1053730
W14x1054730
W14x1055730
W14x1056730
W14x1057730
W14x1058730
W14x1059730
W14x1060730
W14x1061730
W14x1062730
W14x1063730
W14x1064730
W14x1065730
W14x1066730
W14x1067730
W14x1068730
W14x1069730
W14x1070730
W14x1071730
W14x1072730
W14x1073730
W14x1074730
W14x1075730
W14x1076730
W14x1077730
W14x1078730
W14x1079730
W14x1080730
W14x1081730
W14x1082730
W14x1083730
W14x1084730
W14x1085730
W14x1086730
W14x1087730
W14x1088730
W14x1089730
W14x1090730
W14x1091730
W14x1092730
W14x1093730
W14x1094730
W14x1095730
W14x1096730
W14x1097730
W14x1098730
W14x1099730
W14x1100730
W14x1101730
W14x1102730
W14x1103730
W14x1104730
W14x1105730
W14x1106730
W14x1107730
W14x1108730
W14x1109730
W14x1110730
W14x1111730
W14x1112730
W14x1113730
W14x1114730
W14x1115730
W14x1116730
W14x1117730
W14x1118730
W14x1119730
W14x1120730
W14x1121730
W14x1122730
W14x1123730
W14x1124730
W14x1125730
W14x1126730
W14x1127730
W14x1128730
W14x1129730
W14x1130730
W14x1131730
W14x1132730
W14x1133730
W14x1134730
W14x1135730
W14x1136730
W14x1137730
W14x1138730
W14x1139730
W14x1140730
W14x1141730
W14x1142730
W14x1143730
W14x1144730
W14x1145730
W14x1146730
W14x1147730
W14x1148730
W14x1149730
W14x1150730
W14x1151730
W14x1152730
W14x1153730
W14x1154730
W14x1155730
W14x1156730
W14x1157730
W14x1158730
W14x1159730
W14x1160730
W14x1161730
W14x1162730
W14x1163730
W14x1164730
W14x1165730
W14x1166730
W14x1167730
W14x1168730
W14x1169730
W14x1170730
W14x1171730
W14x1172730
W14x1173730
W14x1174730
W14x1175730
W14x1176730
W14x1177730
W14x1178730
W14x1179730
W14x1180730
W14x1181730
W14x1182730
W14x1183730
W14x1184730
W14x1185730
W14x1186730
W14x1187730
W14x1188730
W14x1189730
W14x1190730
W14x1191730
W14x1192730
W14x1193730
W14x1194730
W14x1195730
W14x1196730
W14x1197730
W14x1198730
W14x1199730
W14x1200730
W14x1201730
W14x1202730
W14x1203730
W14x1204730
W14x1205730
W14x1206730
W14x1207730
W14x1208730
W14x1209730
W14x1210730
W14x1211730
W14x1212730
W14x1213730
W14x1214730
W14x1215730
W14x1216730
W14x1217730
W14x1218730
W14x1219730
W14x1220730
W14x1221730
W14x1222730
W14x1223730
W14x1224730
W14x1225730
W14x1226730
W14x1227730
W14x1228730
W14x1229730
W14x1230730
W14x1231730
W14x1232730
W14x1233730
W14x1234730
W14x1235730
W14x1236730
W14x1237730
W14x1238730
W14x1239730
W14x1240730
W14x1241730
W14x1242730
W14x1243730
W14x1244730
W14x1245730
W14x1246730
W14x1247730
W14x1248730
W14x1249730
W14x1250730
W14x1251730
W14x1252730
W14x1253730
W14x1254730
W14x1255730
W14x1256730
W14x1257730
W14x1258730
W14x1259730
W14x1260730
W14x1261730
W14x1262730
W14x1263730
W14x1264730
W14x1265730
W14x1266730
W14x1267730
W14x1268730
W14x1269730
W14x1270730
W14x1271730
W14x1272730
W14x1273730
W14x1274730
W14x1275730
W14x1276730
W14x1277730
W14x1278730
W14x1279730
W14x1280730
W14x1281730
W14x1282730
W14x1283730
W14x1284730
W14x1285730
W14x1286730
W14x1287730
W14x1288730
W14x1289730
W14x1290730
W14x1291730
W14x1292730
W14x1293730
W14x1294730
W14x1295730
W14x1296730
W14x1297730
W14x1298730
W14x1299730
W14x1300730
W14x1301730
W14x1302730
W14x1303730
W14x1304730
W14x1305730
W14x1306730
W14x1307730
W14x1308730
W14x1309730
W14x1310730
W14x1311730
W14x1312730
W14x1313730
W14x1314730
W14x1315730
W14x1316730
W14x1317730
W14x1318730
W14x1319730
W14x1320730
W14x1321730
W14x1322730
W14x1323730
W14x1324730
W14x1325730
W14x1326730
W14x1327730
W14x1328730
W14x1329730
W14x1330730
W14x1331730
W14x1332730
W14x1333730
W14x1334730
W14x1335730
W14x1336730
W14x1337730
W14x1338730
W14x1339730
W14x1340730
W14x1341730
W14x1342730
W14x1343730
W14x1344730
W14x1345730
W14x1346730
W14x1347730
W14x1348730
W14x1349730
W14x1350730
W14x1351730
W14x1352730
W14x1353730
W14x1354730
W14x1355730
W14x1356730
W14x1357730
W14x1358730
W14x1359730
W14x1360730
W14x1361730
W14x1362730
W14x1363730
W14x1364730
W14x1365730
W14x1366730
W14x1367730
W14x1368730
W14x1369730
W14x1370730
W14x1371730
W14x1372730
W14x1373730
W14x1374730
W14x1375730
W14x1376730
W14x1377730
W14x1378730
W14x1379730
W14x1380730
W14x1381730
W14x1382730
W14x1383730
W14x1384730
W14x1385730
W14x1386730
W14x1387730
W14x1388730
W14x1389730
W14x1390730
W14x1391730
W14x1392730
W14x1393730
W14x1394730
W14x1395730
W14x1396730
W14x1397730
W14x1398730
W14x1399730
W14x1400730
W14x1401730
W14x1402730
W14x1403730
W14x1404730
W14x1405730
W14x1406730
W14x1407730
W14x1408730
W14x1409730
W14x1410730
W14x1411730
W14x1412730
W14x1413730
W14x1414730
W14x1415730
W14x1416730
W14x1417730
W14x1418730
W14x1419730
W14x1420730
W14x1421730
W14x1422730
W14x1423730
W14x1424730
W14x1425730
W14x1426730
W14x1427730
W14x1428730
W14x1429730
W14x1430730
W14x1431730
W14x1432730
W14x1433730
W14x1434730
W14x1435730
W14x1436730
W14x1437730
W14x1438730
W14x1439730
W14x1440730
W14x1441730
W14x1442730
W14x1443730
W14x1444730
W14x1445730
W14x1446730
W14x1447730
W14x1448730
W14x1449730
W14x1450730
W14x1451730
W14x1452730
W14x1453730
W14x1454730
W14x1455730
W14x1456730
W14x1457730
W14x1458730
W14x1459730
W14x1460730
W14x1461730
W14x1462730
W14x1463730
W14x1464730
W14x1465730
W14x1466730
W14x1467730
W14x1468730
W14x1469730
W14x1470730
W14x1471730
W14x1472730
W14x1473730
W14x1474730
W14x1475730
W14x1476730
W14x1477730
W14x1478730
W14x1479730
W14x1480730
W14x1481730
W14x1482730
W14x1483730
W14x1484730
W14x1485730
W14x1486730
W14x1487730
W14x1488730
W14x1489730
W14x1490730
W14x1491730
W14x1492730
W14x1493730
W14x1494730
W14x1495730
W14x1496730
W14x1497730
W14x1498730
W14x1499730
W14x1500730
W14x1501730
W14x1502730
W14x1503730
W14x1504730
W14x1505730
W14x1506730
W14x1507730
W14x1508730
W14x1509730
W14x1510730
W14x1511730
W14x1512730
W14x1513730
W14x1514730
W14x1515730
W14x1516730
W14x1517730
W14x1518730
W14x1519730
W14x1520730
W14x1521730
W14x1522730
W14x1523730
W14x1524730
W14x1525730
W14x1526730
W14x1527730
W14x1528730
W14x1529730
W14x1530730
W14x1531730
W14x1532730
W14x1533730
W14x1534730
W14x1535730
W14x1536730
W14x1537730
W14x1538730
W14x1539730
W14x1540730
W14x1541730
W14x1542730
W14x1543730
W14x1544730
W14x1545730
W14x1546730
W14x1547730
W14x1548730
W14x1549730
W14x1550730
W14x1551730
W14x1552730
W14x1553730
W14x1554730
W14x1555730
W14x1556730
W14x1557730
W14x1558730
W14x1559730
W14x1560730
W14x1561730
W14x1562730
W14x1563730
W14x1564730
W14x1565730
W14x1566730
W14x1567730
W14x1568730
W14x1569730
W14x1570730
W14x1571730
W14x1572730
W14x1573730
W14x1574730
W14x1575730
W14x1576730
W14x1577730
W14x1578730
W14x1579730
W14x1580730
W14x1581730
W14x1582730
W14x1583730
W14x1584730
W14x1585730
W14x1586730
W14x1587730
W14x1588730
W14x1589730
W14x1590730
W14x1591730
W14x1592730
W14x1593730
W14x1594730
W14x1595730
W14x1596730
W14x1597730
W14x1598730
W14x1599730
W14x1600730
W14x1601730
W14x1602730
W14x1603730
W14x1604730
W14x1605730
W14x1606730
W14x1607730
W14x1608730
W14x1609730
W14x1610730
W14x1611730
W14x1612730
W14x1613730
W14x1614730
W14x1615730
W14x1616730
W14x1617730
W14x1618730
W14x1619730
W14x1620730
W14x1621730
W14x1622730
W14x1623730
W14x1624730
W14x1625730
W14x1626730
W14x1627730
W14x1628730
W14x1629730
W14x1630730
W14x1631730
W14x1632730
W14x1633730
W14x1634730
W14x1635730
W14x1636730
W14x1637730
W14x1638730
W14x1639730
W14x1640730
W14x1641730
W14x1642730
W14x1643730
W14x1644730
W14x1645730
W14x1646730
W14x1647730
W14x1648730
W14x1649730
W14x1650730
W14x1651730
W14x1652730
W14x1653730
W14x1654730
W14x1655730
W14x1656730
W14x1657730
W14x1658730
W14x1659730
W14x1660730
W14x1661730
W14x1662730
W14x1663730
W14x1664730
W14x1665730
W14x1666730
W14x1667730
W14x1668730
W14x1669730
W14x1670730
W14x1671730
W14x1672730
W14x1673730
W14x1674730
W14x1675730
W14x1676730
W14x1677730
W14x1678730
W14x1679730
W14x1680730
W14x1681730
W14x1682730
W14x1683730
W14x1684730
W14x1685730
W14x1686730
W14x1687730
W14x1688730
W14x1689730
W14x1690730
W14x1691730
W14x1692730
W14x1693730
W14x1694730
W14x1695730
W14x1696730
W14x1697730
W14x1698730
W14x1699730
W14x1700730
W14x1701730
W14x1702730
W14x1703730
W14x1704730
W14x1705730
W14x1706730
W14x1707730
W14x1708730
W14x1709730
W14x1710730
W14x1711730
W14x1712730
W14x1713730
W14x1714730
W14x1715730
W14x1716730
W14x1717730
W14x1718730
W14x1719730
W14x1720730
W14x1721730
W14x1722730
W14x1723730
W14x1724730
W14x1725730
W14x1726730
W14x1727730
W14x1728730
W14x1729730
W14x1730730
W14x1731730
W14x1732730
W14x1733730
W14x1734730
W14x1735730
W14x1736730
W14x1737730
W14x1738730
W14x1739730
W14x1740730
W14x1741730
W14x1742730
W14x1743730
W14x1744730
W14x1745730
W14x1746730
W14x1747730
W14x1748730
W14x1749730
W14x1750730
W14x1751730
W14x1752730
W14x1753730
W14x1754730
W14x1755730
W14x1756730
W14x1757730
W14x1758730
W14x1759730
W14x1760730
W14x1761730
W14x1762730
W14x1763730
W14x1764730
W14x1765730
W14x1766730
W14x1767730
W14x1768730
W14x1769730
W14x1770730
W14x1771730
W14x1772730
W14x1773730
W14x1774730
W14x1775730
W14x1776730
W14x1777730
W14x1778730
W14x1779730
W14x1780730
W14x1781730
W14x1782730
W14x1783730
W14x1784730
W14x1785730
W14x1786730
W14x1787730
W14x1788730
W14x1789730
W14x1790730
W14x1791730
W14x1792730
W14x1793730
W14x1794730
W14x1795730
W14x1796730
W14x1797730
W14x1798730
W14x1799730
W14x1800730
W14x1801730
W14x1802730
W14x1803730
W14x1804730
W14x1805730
W14x1806730
W14x1807730
W14x1808730
W14x1809730
W14x1810730
W14x1811730
W14x1812730
W14x1813730
W14x1814730
W14x1815730
W14x1816730
W14x1817730
W14x1818730
W14x1819730
W14x1820730
W14x1821730
W14x1822730
W14x1823730
W14x1824730
W14x1825730
W14x1826730
W14x1827730
W14x1828730
W14x1829730
W14x1830730
W14x1831730
W14x1832730
W14x1833730
W14x1834730
W14x1835730
W14x1836730
W14x1837730
W14x1838730
W14x1839730
W14x1840730
W14x1841730
W14x1842730
W14x1843730
W14x1844730
W14x1845730
W14x1846730
W14x1847730
W14x1848730
W14x1849730
W14x1850730
W14x1851730
W14x1852730
W14x1853730
W14x1854730
W14x1855730
W14x1856730
W14x1857730
W14x1858730
W14x1859730
W14x1860730
W14x1861730
W14x1862730
W14x1863730
W14x1864730
W14x1865730
W14x1866730
W14x1867730
W14x1868730
W14x1869730
W14x1870730
W14x1871730
W14x1872730
W14x1873730
W14x1874730
W14x1875730
W14x1876730
W14x1877730
W14x1878730
W14x1879730
W14x1880730
W14x1881730
W14x1882730
W14x1883730
W14x1884730
W14x1885730
W14x1886730
W14x1887730
W14x1888730
W14x1889730
W14x1890730
W14x1891730
W14x1892730
W14x1893730
W14x1894730
W14x1895730
W14x1896730
W14x1897730
W14x1898730
W14x1899730
W14x1900730
W14x1901730
W14x1902730
W14x1903730
W14x1904730
W14x1905730
W14x1906730
W14x1907730
W14x1908730
W14x1909730
W14x1910730
W14x1911730
W14x1912730
W14x1913730
W14x1914730
W14x1915730
W14x1916730
W14x1917730
W14x1918730
W14x1919730
W14x1920730
W14x1921730
W14x1922730
W14x1923730
W14x1924730
W14x1925730
W14x1926730
W14x1927730
W14x1928730
W14x1929730
W14x1930730
W14x1931730
W14x1932730
W14x1933730
W14x1934730
W14x1935730
W14x1936730
W14x1937730
W14x1938730
W14x1939730
W14x1940730
W14x1941730
W14x1942730
W14x1943730
W14x1944730
W14x1945730
W14x1946730
W14x1947730
W14x1948730
W14x1949730
W14x1950730
W14x1951730
W14x1952730
W14x1953730
W14x1954730
W14x1955730
W14x1956730
W14x1957730
W14x1958730
W14x1959730
W14x1960730
W14x1961730
W14x1962730
W14x1963730
W14x1964730
W14x1965730
W14x1966730
W14x1967730
W14x1968730
W14x1969730
W14x1970730
W14x1971730
W14x1972730
W14x1973730
W14x1974730
W14x1975730
W14x1976730
W14x1977730
W14x1978730
W14x1979730
W14x1980730
W14x1981730
W14x1982730
W14x1983730
W14x1984730
W14x1985730
W14x1986730
W14x1987730
W14x1988730
W14x1989730
W14x1990730
W14x1991730
W14x1992730
W14x1993730
W14x1994730
W14x1995730
W14x1996730
W14x1997730
W14x1998730
W14x1999730
W14x2000730
W14x2001730
W14x2002730
W14x2003730
W14x2004730
W14x2005730
W14x2006730
W14x2007730
W14x2008730
W14x2009730
W14x2010730
W14x2011730
W14x2012730
W14x2013730
W14x2014730
W14x2015730
W14x2016730
W14x2017730
W14x2018730
W14x2019730
W14x2020730
W14x2021730
W14x2022730
W14x2023730
W14x2024730
W14x2025730
W14x2026730
W14x2027730
W14x2028730
W14x2029730
W14x2030730
W14x2031730
W14x2032730
W14x2033730
W14x2034730
W14x2035730
W14x2036730
W14x2037730
W14x2038730
W14x2039730
W14x2040730
W14x2041730
W14x2042730
W14x2043730
W14x2044730
W14x2045730
W14x2046730
W14x2047730
W14x2048730
W14x2049730
W14x2050730
W14x2051730
W14x2052730
W14x2053730
W14x2054730
W14x2055730
W14x2056730
W14x2057730
W14x2058730
W14x2059730
W14x2060730
W14x2061730
W14x2062730
W14x2063730
W14x2064730
W14x2065730
W14x2066730
W14x2067730
W14x2068730
W14x2069730
W14x2070730
W14x2071730
W14x2072730
W14x2073730
W14x2074730
W14x2075730
W14x2076730
W14x2077730
W14x2078730
W14x2079730
W14x2080730
W14x2081730
W14x2082730
W14x2083730
W14x2084730
W14x2085730
W14x2086730
W14x2087730
W14x2088730
W14x2089730
W14x2090730
W14x2091730
W14x2092730
W14x2093730
W14x2094730
W14x2095730
W14x2096730
W14x2097730
W14x2098730
W14x2099730
W14x2100730
W14x2101730
W14x2102730
W14x2103730
W14x2104730
W14x2105730
W14x2106730
W14x2107730
W14x2108730
W14x2109730
W14x2110730
W14x2111730
W14x2112730
W14x2113730
W14x2114730
W14x2115730
W14x2116730
W14x2117730
W14x2118730
W14x2119730
W14x2120730
W14x2121730
W14x2122730
W14x2123730
W14x2124730
W14x2125730
W14x2126730
W14x2127730
W14x2128730
W14x2129730
W14x2130730
W14x2131730
W14x2132730
W14x2133730
W14x2134730
W14x2135730
W14x2136730
W14x2137730
W14x2138730
W14x2139730
W14x2140730
W14x2141730
W14x2142730
W14x2143730
W14x2144730
W14x2145730
W14x2146730
W14x2147730
W14x2148730
W14x2149730
W14x2150730
W14x2151730
W14x2152730
W14x2153730
W14x2154730
W14x2155730
W14x2156730
W14x2157730
W14x2158730
W14x2159730
W14x2160730
W14x2161730
W14x2162730
W14x2163730
W14x2164730
W14x2165730
W14x2166730
W14x2167730
W14x2168730
W14x2169730
W14x2170730
W14x2171730
W14x2172730
W14x2173730
W14x2174730
W14x2175730
W14x2176730
W14x2177730
W14x2178730
W14x2179730
W14x2180730
W14x2181730
W14x2182730
W14x2183730
W14x2184730
W14x2185730
W14x2186730
W14x2187730
W14x2188730
W14x2189730
W14x2190730
W14x2191730
W14x2192730
W14x2193730
W14x2194730
W14x2195730
W14x2196730
W14x2197730
W14x2198730
W14x2199730
W14x2200730
W14x2201730
W14x2202730
W14x2203730
W14x2204730
W14x2205730
W14x2206730
W14x2207730
W14x2208730
W14x2209730
W14x2210730
W14x2211730
W14x2212730
W14x2213730
W14x2214730
W14x2215730
W14x2216730
W14x2217730
W14x2218730
W14x2219730
W14x2220730
W14x2221730
W14x2222730
W14x2223730
W14x2224730
W14x2225730
W14x2226730
W14x2227730
W14x2228730
W14x2229730
W14x2230730
W14x2231730
W14x2232730
W14x2233730
W14x2234730
W14x2235730
W14x2236730
W14x2237730
W14x2238730
W14x2239730
W14x2240730
W14x2241730
W14x2242730
W14x2243730
W14x2244730
W14x2245730
W14x2246730
W14x2247730
W14x2248730
W14x2249730
W14x2250730
W14x2251730
W14x2252730
W14x2253730
W14x2254730
W14x2255730
W14x2256730
W14x2257730
W14x2258730
W14x2259730
W14x2260730
W14x2261730
W14x2262730
W14x2263730
W14x2264730
W14x2265730
W14x2266730
W14x2267730
W14x2268730
W14x2269730
W14x2270730
W14x2271730
W14x2272730
W14x2273730
W14x2274730
W14x2275730
W14x2276730
W14x2277730
W14x2278730
W14x2279730
W14x2280730
W14x2281730
W14x2282730
W14x2283730
W14x2284730
W14x2285730
W14x2286730
W14x2287730
W14x2288730
W14x2289730
W14x2290730
W14x2291730
W14x2292730
W14x2293730
W14x2294730
W14x2295730
W14x2296730
W14

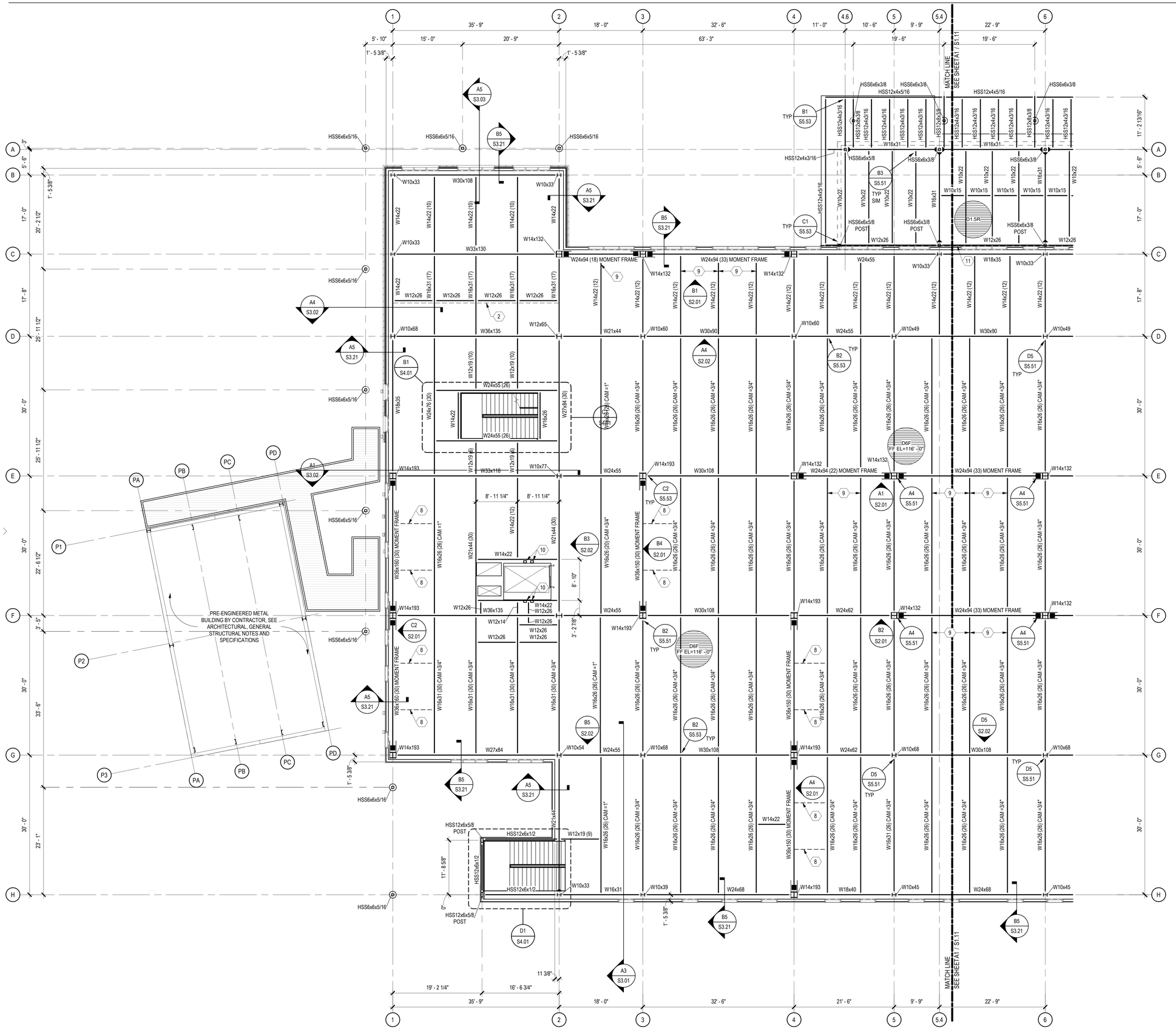

A1 FLOOR FRAMING PLAN - SECTOR 2

SCALE: 1/8" = 1'-0"

GENERAL SHEET NOTES

1. SOME SHEET KEYNOTES MAY NOT APPLY TO THIS SHEET.
2. NOTE TO ERECTOR: LATERAL STABILITY OF THE STEEL FRAME IS DEPENDENT UPON THE MOMENT FRAMES. THE ERECTOR SHALL PROVIDE TEMPORARY BRACING OF THE STEEL FRAME IN ACCORDANCE WITH SECTION 7.10 OF THE AISC CODE OF STANDARD PRACTICES.
3. DIMENSIONS ARE TO THE FACE OF STUD UNLESS NOTED OTHERWISE.
4. SEE ARCHITECTURAL DRAWINGS FOR MASONRY DIMENSIONS NOT SHOWN.
5. EXISTING CONSTRUCTION IS PER AVAILABLE EXISTING DRAWINGS. ALL EXISTING CONSTRUCTION AND DIMENSIONS SHALL BE VERIFIED PRIOR TO CONSTRUCTION. SHOULD CONDITIONS VARY FROM THOSE SHOWN, CONTACT ENGINEER BEFORE PROCEEDING.
6. STRUCTURAL COLD FORMED METAL STUDS SHALL BE 600S162-43 AT 16" ON CENTER UNLESS NOTED OTHERWISE.
7. BEAMS AND JOISTS ARE SPACED EQUALLY BETWEEN GRIDS AND COLUMNS UNLESS NOTED OTHERWISE.
8. SEE SHEET S7.00 SERIES SHEETS FOR TYPICAL FLOOR FRAMING SECTIONS.
9. SEE SHEET S6.01 FOR SCHEDULES.
10. ▶ DENOTES MOMENT CONNECTION PER TYPICAL DETAILS.
11. ■ DENOTES SIDEPLATE MOMENT CONNECTION. SEE SIDEPLATE DRAWINGS.

SHEET KEYNOTE

1. MECHANICAL UNIT, COORDINATE EXACT SIZE AND LOCATION WITH MECHANICAL DRAWINGS.
2. OPERABLE PARTITION BELOW. COORDINATE EXACT LOCATION WITH ARCHITECTURAL DRAWINGS. SEE A5 / S5.52 AND B5 / S5.52 FOR SUPPORT.
3. MECHANICAL OPENING, COORDINATE EXACT SIZE AND LOCATION WITH MECHANICAL DRAWINGS. SEE C5 / S7.42
4. HSS6x4x1/2 ELEVATOR RAIL SUPPORT POST. COORDINATE EXACT LOCATION WITH ELEVATOR MANUFACTURER. SEE A2 / S5.41, B2 / S5.41, C2 / S5.41, AND D3 / S5.41
5. HSS6x4x1/4 COLLECTOR BLOCKING BETWEEN BEAMS, SEE D4 / S5.52. ATTACH BLOCKING TO DECK VALLEYS PER DECK SCHEDULE. PROVIDE 20 GAGE PLATE AS REQUIRED TO MAKE ATTACHMENT.
6. 4" HOUSEKEEPING PAD REINFORCED WITH #4 @ 18" ON CENTER EACH WAY AND #4 VERT DOWELS DRILLED AND EPOXIED 2" INTO CONCRETE SLAB BELOW @ 48" ON CENTER EACH WAY (12" FROM EDGES AND CORNERS). PAD SHALL EXTEND 6" BEYOND FACE OF MECHANICAL UNIT ALL AROUND. COORDINATE EXACT SIZE AND LOCATION OF PAD WITH MECHANICAL DRAWINGS.
7. EXISTING CANOPY. SEE ARCHITECTURAL DEMOLITION PLANS FOR EXTENT OF DEMOLITION.
8. BOTTOM FLANGE BRACING AT EQUAL SPACING, UNLESS NOTED OTHERWISE. BRACE TO BE ATTACHED TO BOTTOM FLANGE OF BEAM NOTED AS MOMENT FRAME OR BRACED FRAME TO TOP FLANGE OF ADJACENT BEAM. SEE B3 / S5.52
9. BOTTOM FLANGE BRACING. SEE A3 / S5.52
10. HSS8x6x1/2 ELEVATOR RAIL SUPPORT BEAM. COORDINATE EXACT LOCATION WITH ELEVATOR MANUFACTURER. SEE A1 / S5.41 AND B1 / S5.41 FOR TYPICAL DETAILS.
11. 2" BUILDING EXPANSION JOINT. SEE ARCHITECTURAL DRAWINGS.
12. SLAB EDGE TO BE LOCATED AT OUTSIDE FLANGE OF BEAM. SEE S7.41 FOR SLAB EDGE DETAILS.

James R. Childers Architect, Inc.
45 South 4th Street
Fort Smith, AR 72901
479-783-2480
www.childersarchitect.com

PROFESSIONAL SEAL:

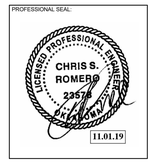

CONSULTANT LOGO:

Chavez-Grieves consulting engineers, inc.
4700 Lincoln Road NE, Suite 102 Albuquerque, NM 87109
505-344-4080 505-343-8759 (fax)

CLIENT:

THE CHEROKEE NATION
TRIBAL JURISDICTIONAL TERRITORY
SEPT. 6, 1839

WILMA P. MANKILLER HEALTH CENTER EXPANSION

STILWELL, OKLAHOMA

KEY PLAN:

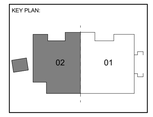

PROJECT PHASE:

BID PACKAGE 01

REVISIONS

#	DATE	DESCRIPTION

DATE: 11-01-19

JOB NUMBER: 18-01.01

SHEET NUMBER: S1.12

FLOOR FRAMING PLAN - SECTOR 2

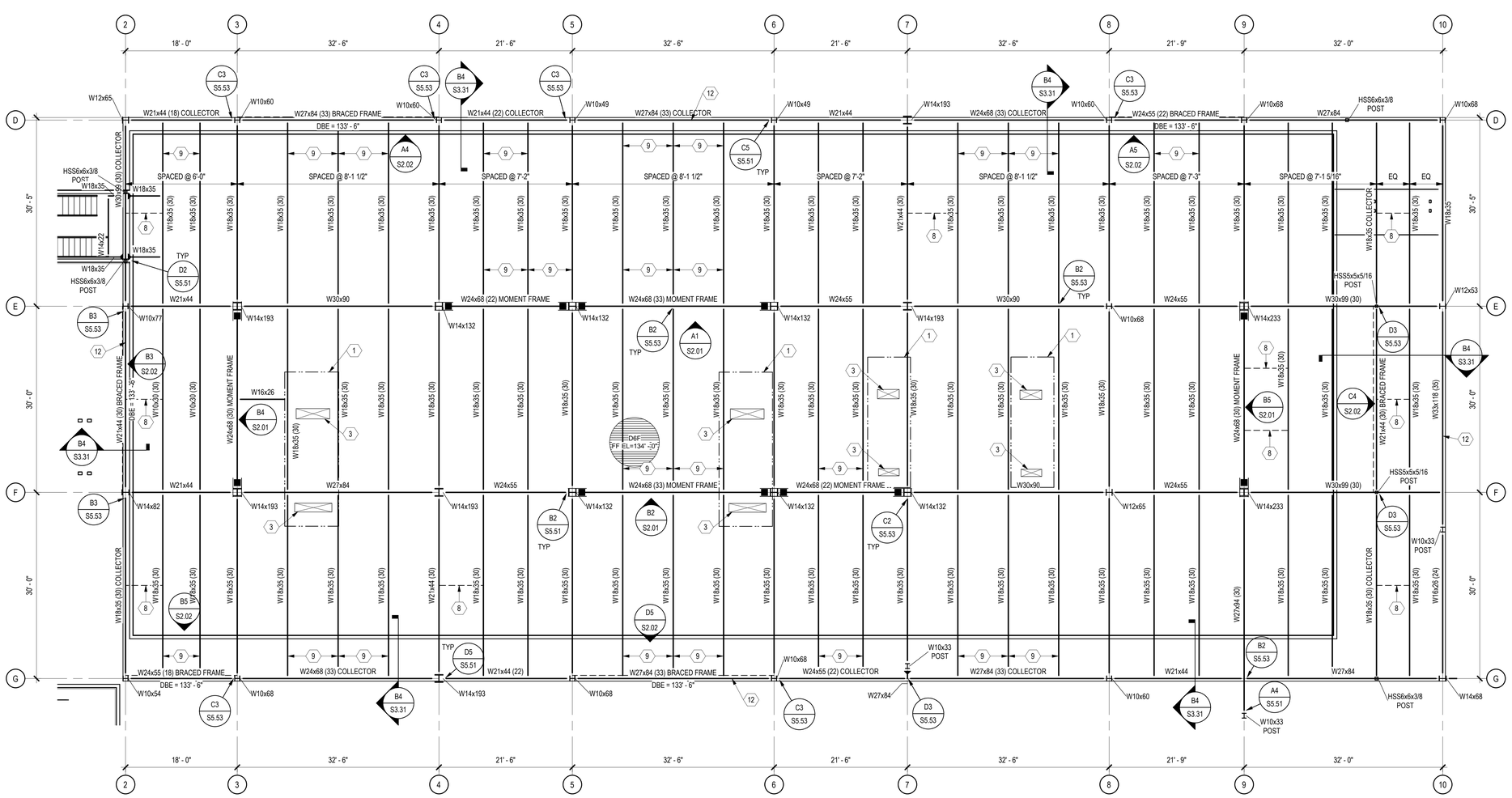

A1 LOW ROOF FRAMING PLAN

SCALE: 1/8" = 1'-0"

0 4' 8' 16'

GENERAL SHEET NOTES

1. SOME SHEET KEYNOTES MAY NOT APPLY TO THIS SHEET.
2. NOTE TO ERECTOR: LATERAL STABILITY OF THE STEEL FRAME IS DEPENDENT UPON THE MOMENT FRAMES. THE ERECTOR SHALL PROVIDE TEMPORARY BRACING OF THE STEEL FRAME IN ACCORDANCE WITH SECTION 7.10 OF THE AISC CODE OF STANDARD PRACTICES.
3. DIMENSIONS ARE TO THE FACE OF STUD UNLESS NOTED OTHERWISE.
4. SEE ARCHITECTURAL DRAWINGS FOR MASONRY DIMENSIONS NOT SHOWN.
5. EXISTING CONSTRUCTION IS PER AVAILABLE EXISTING DRAWINGS. ALL EXISTING CONSTRUCTION AND DIMENSIONS SHALL BE VERIFIED PRIOR TO CONSTRUCTION. SHOULD CONDITIONS VARY FROM THOSE SHOWN, CONTACT ENGINEER BEFORE PROCEEDING.
6. STRUCTURAL COLD FORMED METAL STUDS SHALL BE 600S162-43 AT 16" ON CENTER UNLESS NOTED OTHERWISE.
7. BEAMS AND JOISTS ARE SPACED EQUALLY BETWEEN GRIDS AND COLUMNS UNLESS NOTED OTHERWISE.
8. SEE SHEET S7.00 SERIES SHEETS FOR TYPICAL FLOOR FRAMING SECTIONS.
9. SEE SHEET S6.01 FOR SCHEDULES.
10. ▶—— DENOTES MOMENT CONNECTION PER TYPICAL DETAILS.
11. ■—— DENOTES SIDEPLATE MOMENT CONNECTION. SEE SIDEPLATE DRAWINGS.

SHEET KEYNOTE

1. MECHANICAL UNIT, COORDINATE EXACT SIZE AND LOCATION WITH MECHANICAL DRAWINGS.
2. OPERABLE PARTITION BELOW. COORDINATE EXACT LOCATION WITH ARCHITECTURAL DRAWINGS. SEE A5 / S5.52 AND B5 / S5.52 FOR SUPPORT.
3. MECHANICAL OPENING, COORDINATE EXACT SIZE AND LOCATION WITH MECHANICAL DRAWINGS. SEE C5 / S7.42
4. HSS6x4x1/2 ELEVATOR RAIL SUPPORT POST. COORDINATE EXACT LOCATION WITH ELEVATOR MANUFACTURER. SEE A2 / S5.41, B2 / S5.41, C2 / S5.41, AND D3 / S5.41
5. HSS6x4x1/4 COLLECTOR BLOCKING BETWEEN BEAMS, SEE D4 / S5.52. ATTACH BLOCKING TO DECK VALLEYS PER DECK SCHEDULE. PROVIDE 20 GAGE PLATE AS REQUIRED TO MAKE ATTACHMENT.
6. 4" HOUSEKEEPING PAD REINFORCED WITH #4 @ 18" ON CENTER EACH WAY AND #4 VERT DOWELS DRILLED AND EPOXIED 2" INTO CONCRETE SLAB BELOW @ 48" ON CENTER EACH WAY (12" FROM EDGES AND CORNERS). PAD SHALL EXTEND 6" BEYOND FACE OF MECHANICAL UNIT ALL AROUND. COORDINATE EXACT SIZE AND LOCATION OF PAD WITH MECHANICAL DRAWINGS.
7. EXISTING CANOPY. SEE ARCHITECTURAL DEMOLITION PLANS FOR EXTENT OF DEMOLITION.
8. BOTTOM FLANGE BRACING AT EQUAL SPACING, UNLESS NOTED OTHERWISE. BRACE TO BE ATTACHED TO BOTTOM FLANGE OF BEAM NOTED AS MOMENT FRAME OR BRACED FRAME TO TOP FLANGE OF ADJACENT BEAM. SEE B3 / S5.52
9. BOTTOM FLANGE BRACING. SEE A3 / S5.52
10. HSS8x6x1/2 ELEVATOR RAIL SUPPORT BEAM. COORDINATE EXACT LOCATION WITH ELEVATOR MANUFACTURER. SEE A1 / S5.41 AND B1 / S5.41 FOR TYPICAL DETAILS.
11. 2" BUILDING EXPANSION JOINT. SEE ARCHITECTURAL DRAWINGS.
12. SLAB EDGE TO BE LOCATED AT OUTSIDE FLANGE OF BEAM. SEE S7.41 FOR SLAB EDGE DETAILS.

James R. Childers Architect, Inc.
45 South 4th Street
Fort Smith, AR 72901
479-783-2480
www.childersarchitect.com

PROFESSIONAL SEAL:

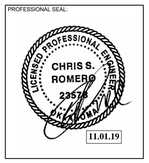

CONSULTANT LOGO:

Chavez-Grieves consulting engineers, inc.
4700 Lincoln Road NE, Suite 102 Albuquerque, NM 87109
505-344-4080 505-343-8759 (fax)

CLIENT:

THE CHEROKEE NATION TRIBAL SEAT SEPT. 6, 1839

WILMA P. MANKILLER HEALTH CENTER EXPANSION

STILWELL, OKLAHOMA

KEY PLAN:

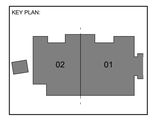

PROJECT PHASE:

BID PACKAGE 01

REVISIONS		
#	DATE	DESCRIPTION

DATE:	JOB NUMBER:
11-01-19	18-01.01

SHEET NUMBER:

S1.13

LOW ROOF FRAMING PLAN

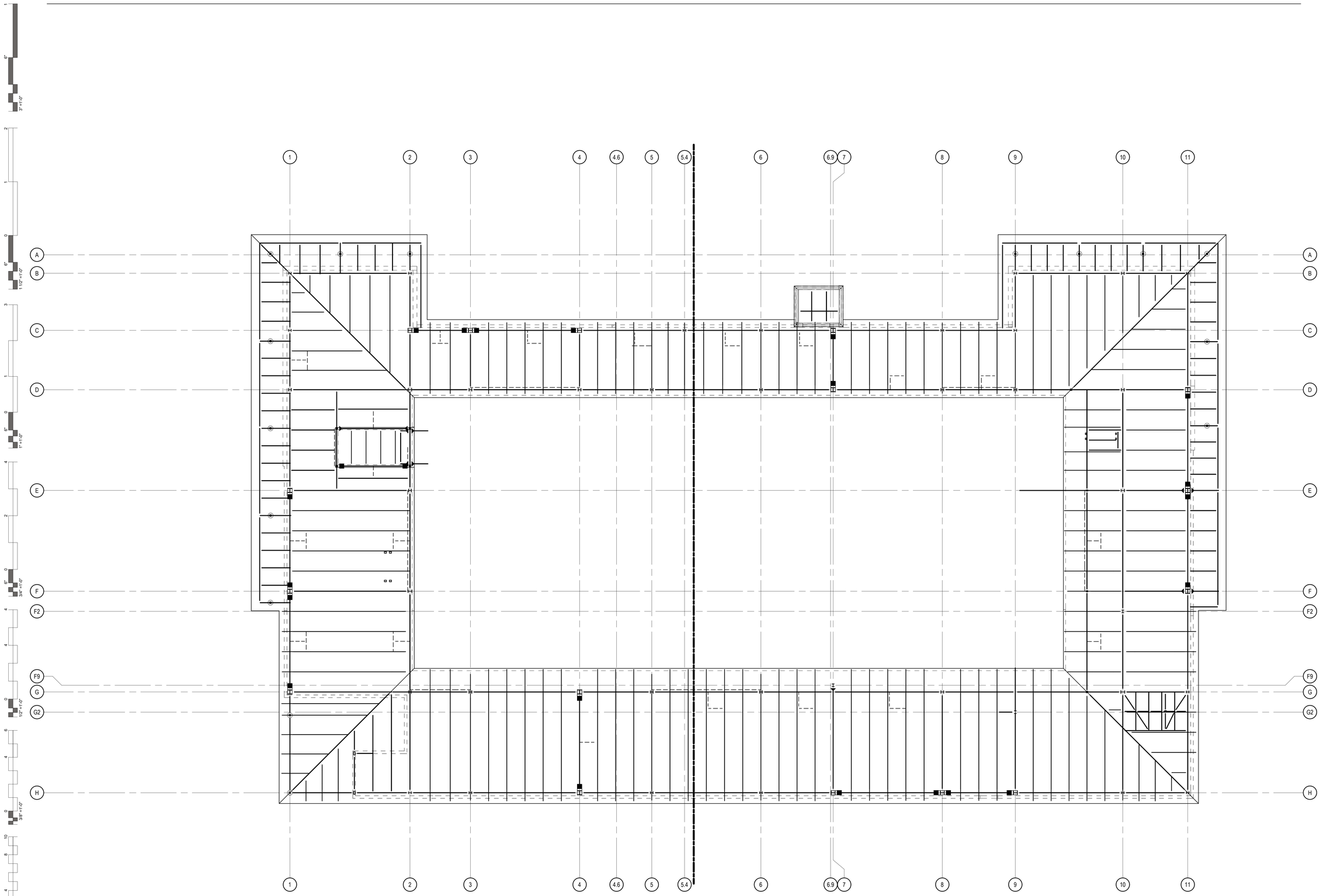

A1 ROOF FRAMING PLAN - OVERALL

SCALE: 3/32" = 1'-0"

James R. Childers Architect, Inc.
45 South 4th Street
Fort Smith, AR 72901
479-783-2480
www.childersarchitect.com

PROFESSIONAL SEAL:

LICENSED PROFESSIONAL ENGINEER
CHRIS S. ROMERO
23576
OKLAHOMA
11.01.19

CONSULTANT LOGO:

Chavez-Grieves
consulting engineers, inc.
4700 Lincoln Road NE, Suite 102 Albuquerque, NM 87109
505-344-4080 · 505-343-8759 (fax)

CLIENT:

SEAL OF THE CHEROKEE NATION
SEPT. 6, 1839

WILMA P. MANKILLER HEALTH CENTER EXPANSION

STILWELL, OKLAHOMA

KEY PLAN:

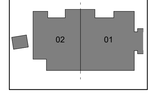

PROJECT PHASE:

BID PACKAGE 01

REVISIONS		
#	DATE	DESCRIPTION

DATE:	JOB NUMBER:
11-01-19	18-01.01

SHEET NUMBER:

S1.20

OVERALL PLAN - ROOF FRAMING

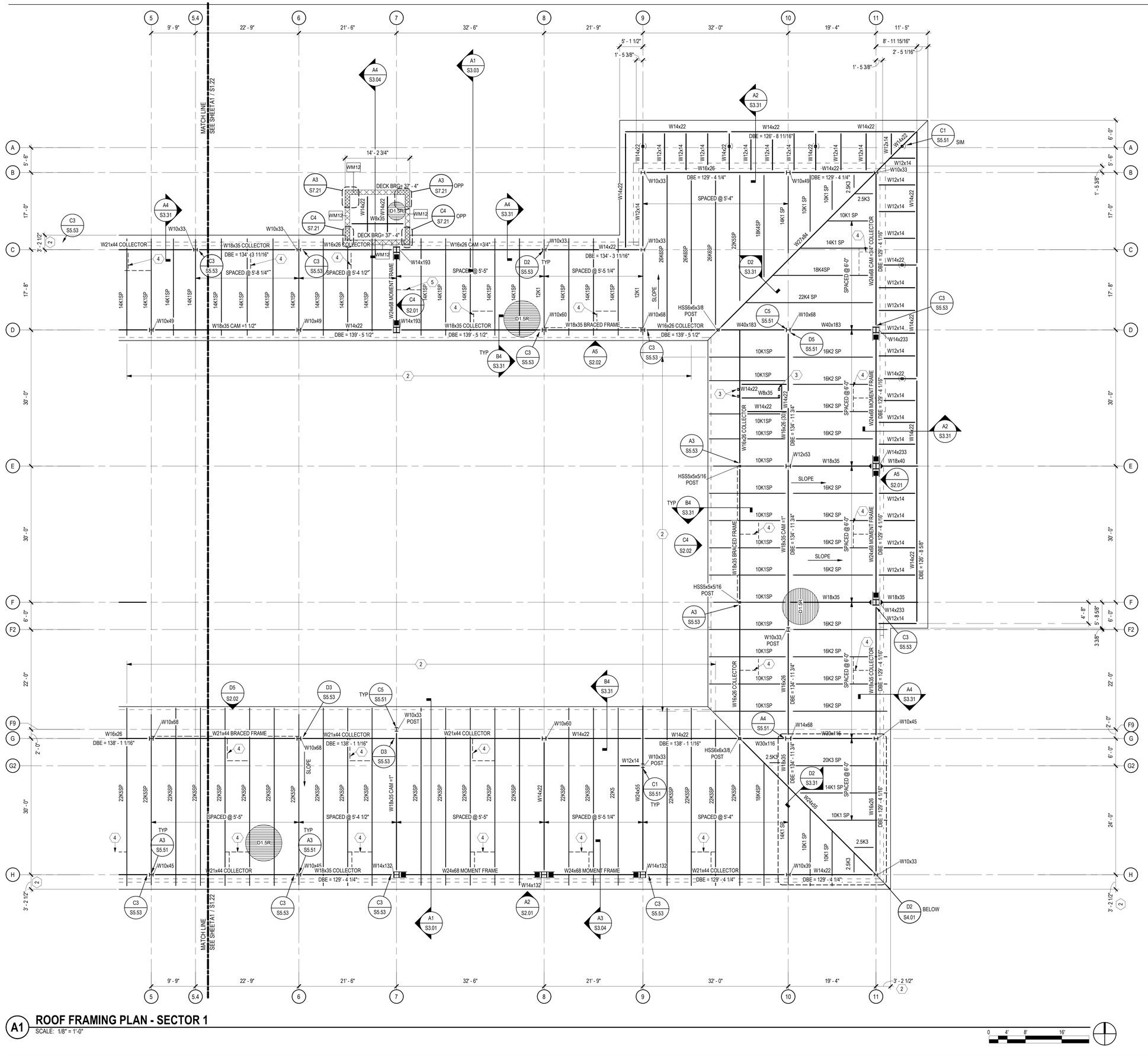
MATCH LINE
SEE SHEET A1 / S1.22
W21x44 COLLECTOR
W18x35 COLLECTOR
W16x26 COLLECTOR
W16x26 CAM =3/4"
W21x44 BRACED FRAME
W18x35 CAM =1 1/2"
W18x35 CAM =1"
W18x35 BRACED FRAME
W24x68 MOMENT FRAME
W24x68 CAM =3/4"
W16x26 COLLECTOR
W16x26 CAM =3/4"
W16x26 CAM =1"
W16x26 CAM =1 1/2"
W16x26 CAM =1 3/4"
W16x26 CAM =2"
W16x26 CAM =2 1/2"
W16x26 CAM =2 3/4"
W16x26 CAM =3"
W16x26 CAM =3 1/4"
W16x26 CAM =3 1/2"
W16x26 CAM =3 3/4"
W16x26 CAM =4"
W16x26 CAM =4 1/4"
W16x26 CAM =4 1/2"
W16x26 CAM =4 3/4"
W16x26 CAM =5"
W16x26 CAM =5 1/4"
W16x26 CAM =5 1/2"
W16x26 CAM =5 3/4"
W16x26 CAM =6"
W16x26 CAM =6 1/4"
W16x26 CAM =6 1/2"
W16x26 CAM =6 3/4"
W16x26 CAM =7"
W16x26 CAM =7 1/4"
W16x26 CAM =7 1/2"
W16x26 CAM =7 3/4"
W16x26 CAM =8"
W16x26 CAM =8 1/4"
W16x26 CAM =8 1/2"
W16x26 CAM =8 3/4"
W16x26 CAM =9"
W16x26 CAM =9 1/4"
W16x26 CAM =9 1/2"
W16x26 CAM =9 3/4"
W16x26 CAM =10"
W16x26 CAM =10 1/4"
W16x26 CAM =10 1/2"
W16x26 CAM =10 3/4"
W16x26 CAM =11"
W16x26 CAM =11 1/4"
W16x26 CAM =11 1/2"
W16x26 CAM =11 3/4"
W16x26 CAM =12"
W16x26 CAM =12 1/4"
W16x26 CAM =12 1/2"
W16x26 CAM =12 3/4"
W16x26 CAM =13"
W16x26 CAM =13 1/4"
W16x26 CAM =13 1/2"
W16x26 CAM =13 3/4"
W16x26 CAM =14"
W16x26 CAM =14 1/4"
W16x26 CAM =14 1/2"
W16x26 CAM =14 3/4"
W16x26 CAM =15"
W16x26 CAM =15 1/4"
W16x26 CAM =15 1/2"
W16x26 CAM =15 3/4"
W16x26 CAM =16"
W16x26 CAM =16 1/4"
W16x26 CAM =16 1/2"
W16x26 CAM =16 3/4"
W16x26 CAM =17"
W16x26 CAM =17 1/4"
W16x26 CAM =17 1/2"
W16x26 CAM =17 3/4"
W16x26 CAM =18"
W16x26 CAM =18 1/4"
W16x26 CAM =18 1/2"
W16x26 CAM =18 3/4"
W16x26 CAM =19"
W16x26 CAM =19 1/4"
W16x26 CAM =19 1/2"
W16x26 CAM =19 3/4"
W16x26 CAM =20"
W16x26 CAM =20 1/4"
W16x26 CAM =20 1/2"
W16x26 CAM =20 3/4"
W16x26 CAM =21"
W16x26 CAM =21 1/4"
W16x26 CAM =21 1/2"
W16x26 CAM =21 3/4"
W16x26 CAM =22"
W16x26 CAM =22 1/4"
W16x26 CAM =22 1/2"
W16x26 CAM =22 3/4"
W16x26 CAM =23"
W16x26 CAM =23 1/4"
W16x26 CAM =23 1/2"
W16x26 CAM =23 3/4"
W16x26 CAM =24"
W16x26 CAM =24 1/4"
W16x26 CAM =24 1/2"
W16x26 CAM =24 3/4"
W16x26 CAM =25"
W16x26 CAM =25 1/4"
W16x26 CAM =25 1/2"
W16x26 CAM =25 3/4"
W16x26 CAM =26"
W16x26 CAM =26 1/4"
W16x26 CAM =26 1/2"
W16x26 CAM =26 3/4"
W16x26 CAM =27"
W16x26 CAM =27 1/4"
W16x26 CAM =27 1/2"
W16x26 CAM =27 3/4"
W16x26 CAM =28"
W16x26 CAM =28 1/4"
W16x26 CAM =28 1/2"
W16x26 CAM =28 3/4"
W16x26 CAM =29"
W16x26 CAM =29 1/4"
W16x26 CAM =29 1/2"
W16x26 CAM =29 3/4"
W16x26 CAM =30"
W16x26 CAM =30 1/4"
W16x26 CAM =30 1/2"
W16x26 CAM =30 3/4"
W16x26 CAM =31"
W16x26 CAM =31 1/4"
W16x26 CAM =31 1/2"
W16x26 CAM =31 3/4"
W16x26 CAM =32"
W16x26 CAM =32 1/4"
W16x26 CAM =32 1/2"
W16x26 CAM =32 3/4"
W16x26 CAM =33"
W16x26 CAM =33 1/4"
W16x26 CAM =33 1/2"
W16x26 CAM =33 3/4"
W16x26 CAM =34"
W16x26 CAM =34 1/4"
W16x26 CAM =34 1/2"
W16x26 CAM =34 3/4"
W16x26 CAM =35"
W16x26 CAM =35 1/4"
W16x26 CAM =35 1/2"
W16x26 CAM =35 3/4"
W16x26 CAM =36"
W16x26 CAM =36 1/4"
W16x26 CAM =36 1/2"
W16x26 CAM =36 3/4"
W16x26 CAM =37"
W16x26 CAM =37 1/4"
W16x26 CAM =37 1/2"
W16x26 CAM =37 3/4"
W16x26 CAM =38"
W16x26 CAM =38 1/4"
W16x26 CAM =38 1/2"
W16x26 CAM =38 3/4"
W16x26 CAM =39"
W16x26 CAM =39 1/4"
W16x26 CAM =39 1/2"
W16x26 CAM =39 3/4"
W16x26 CAM =40"
W16x26 CAM =40 1/4"
W16x26 CAM =40 1/2"
W16x26 CAM =40 3/4"
W16x26 CAM =41"
W16x26 CAM =41 1/4"
W16x26 CAM =41 1/2"
W16x26 CAM =41 3/4"
W16x26 CAM =42"
W16x26 CAM =42 1/4"
W16x26 CAM =42 1/2"
W16x26 CAM =42 3/4"
W16x26 CAM =43"
W16x26 CAM =43 1/4"
W16x26 CAM =43 1/2"
W16x26 CAM =43 3/4"
W16x26 CAM =44"
W16x26 CAM =44 1/4"
W16x26 CAM =44 1/2"
W16x26 CAM =44 3/4"
W16x26 CAM =45"
W16x26 CAM =45 1/4"
W16x26 CAM =45 1/2"
W16x26 CAM =45 3/4"
W16x26 CAM =46"
W16x26 CAM =46 1/4"
W16x26 CAM =46 1/2"
W16x26 CAM =46 3/4"
W16x26 CAM =47"
W16x26 CAM =47 1/4"
W16x26 CAM =47 1/2"
W16x26 CAM =47 3/4"
W16x26 CAM =48"
W16x26 CAM =48 1/4"
W16x26 CAM =48 1/2"
W16x26 CAM =48 3/4"
W16x26 CAM =49"
W16x26 CAM =49 1/4"
W16x26 CAM =49 1/2"
W16x26 CAM =49 3/4"
W16x26 CAM =50"
W16x26 CAM =50 1/4"
W16x26 CAM =50 1/2"
W16x26 CAM =50 3/4"
W16x26 CAM =51"
W16x26 CAM =51 1/4"
W16x26 CAM =51 1/2"
W16x26 CAM =51 3/4"
W16x26 CAM =52"
W16x26 CAM =52 1/4"
W16x26 CAM =52 1/2"
W16x26 CAM =52 3/4"
W16x26 CAM =53"
W16x26 CAM =53 1/4"
W16x26 CAM =53 1/2"
W16x26 CAM =53 3/4"
W16x26 CAM =54"
W16x26 CAM =54 1/4"
W16x26 CAM =54 1/2"
W16x26 CAM =54 3/4"
W16x26 CAM =55"
W16x26 CAM =55 1/4"
W16x26 CAM =55 1/2"
W16x26 CAM =55 3/4"
W16x26 CAM =56"
W16x26 CAM =56 1/4"
W16x26 CAM =56 1/2"
W16x26 CAM =56 3/4"
W16x26 CAM =57"
W16x26 CAM =57 1/4"
W16x26 CAM =57 1/2"
W16x26 CAM =57 3/4"
W16x26 CAM =58"
W16x26 CAM =58 1/4"
W16x26 CAM =58 1/2"
W16x26 CAM =58 3/4"
W16x26 CAM =59"
W16x26 CAM =59 1/4"
W16x26 CAM =59 1/2"
W16x26 CAM =59 3/4"
W16x26 CAM =60"
W16x26 CAM =60 1/4"
W16x26 CAM =60 1/2"
W16x26 CAM =60 3/4"
W16x26 CAM =61"
W16x26 CAM =61 1/4"
W16x26 CAM =61 1/2"
W16x26 CAM =61 3/4"
W16x26 CAM =62"
W16x26 CAM =62 1/4"
W16x26 CAM =62 1/2"
W16x26 CAM =62 3/4"
W16x26 CAM =63"
W16x26 CAM =63 1/4"
W16x26 CAM =63 1/2"
W16x26 CAM =63 3/4"
W16x26 CAM =64"
W16x26 CAM =64 1/4"
W16x26 CAM =64 1/2"
W16x26 CAM =64 3/4"
W16x26 CAM =65"
W16x26 CAM =65 1/4"
W16x26 CAM =65 1/2"
W16x26 CAM =65 3/4"
W16x26 CAM =66"
W16x26 CAM =66 1/4"
W16x26 CAM =66 1/2"
W16x26 CAM =66 3/4"
W16x26 CAM =67"
W16x26 CAM =67 1/4"
W16x26 CAM =67 1/2"
W16x26 CAM =67 3/4"
W16x26 CAM =68"
W16x26 CAM =68 1/4"
W16x26 CAM =68 1/2"
W16x26 CAM =68 3/4"
W16x26 CAM =69"
W16x26 CAM =69 1/4"
W16x26 CAM =69 1/2"
W16x26 CAM =69 3/4"
W16x26 CAM =70"
W16x26 CAM =70 1/4"
W16x26 CAM =70 1/2"
W16x26 CAM =70 3/4"
W16x26 CAM =71"
W16x26 CAM =71 1/4"
W16x26 CAM =71 1/2"
W16x26 CAM =71 3/4"
W16x26 CAM =72"
W16x26 CAM =72 1/4"
W16x26 CAM =72 1/2"
W16x26 CAM =72 3/4"
W16x26 CAM =73"
W16x26 CAM =73 1/4"
W16x26 CAM =73 1/2"
W16x26 CAM =73 3/4"
W16x26 CAM =74"
W16x26 CAM =74 1/4"
W16x26 CAM =74 1/2"
W16x26 CAM =74 3/4"
W16x26 CAM =75"
W16x26 CAM =75 1/4"
W16x26 CAM =75 1/2"
W16x26 CAM =75 3/4"
W16x26 CAM =76"
W16x26 CAM =76 1/4"
W16x26 CAM =76 1/2"
W16x26 CAM =76 3/4"
W16x26 CAM =77"
W16x26 CAM =77 1/4"
W16x26 CAM =77 1/2"
W16x26 CAM =77 3/4"
W16x26 CAM =78"
W16x26 CAM =78 1/4"
W16x26 CAM =78 1/2"
W16x26 CAM =78 3/4"
W16x26 CAM =79"
W16x26 CAM =79 1/4"
W16x26 CAM =79 1/2"
W16x26 CAM =79 3/4"
W16x26 CAM =80"
W16x26 CAM =80 1/4"
W16x26 CAM =80 1/2"
W16x26 CAM =80 3/4"
W16x26 CAM =81"
W16x26 CAM =81 1/4"
W16x26 CAM =81 1/2"
W16x26 CAM =81 3/4"
W16x26 CAM =82"
W16x26 CAM =82 1/4"
W16x26 CAM =82 1/2"
W16x26 CAM =82 3/4"
W16x26 CAM =83"
W16x26 CAM =83 1/4"
W16x26 CAM =83 1/2"
W16x26 CAM =83 3/4"
W16x26 CAM =84"
W16x26 CAM =84 1/4"
W16x26 CAM =84 1/2"
W16x26 CAM =84 3/4"
W16x26 CAM =85"
W16x26 CAM =85 1/4"
W16x26 CAM =85 1/2"
W16x26 CAM =85 3/4"
W16x26 CAM =86"
W16x26 CAM =86 1/4"
W16x26 CAM =86 1/2"
W16x26 CAM =86 3/4"
W16x26 CAM =87"
W16x26 CAM =87 1/4"
W16x26 CAM =87 1/2"
W16x26 CAM =87 3/4"
W16x26 CAM =88"
W16x26 CAM =88 1/4"
W16x26 CAM =88 1/2"
W16x26 CAM =88 3/4"
W16x26 CAM =89"
W16x26 CAM =89 1/4"
W16x26 CAM =89 1/2"
W16x26 CAM =89 3/4"
W16x26 CAM =90"
W16x26 CAM =90 1/4"
W16x26 CAM =90 1/2"
W16x26 CAM =90 3/4"
W16x26 CAM =91"
W16x26 CAM =91 1/4"
W16x26 CAM =91 1/2"
W16x26 CAM =91 3/4"
W16x26 CAM =92"
W16x26 CAM =92 1/4"
W16x26 CAM =92 1/2"
W16x26 CAM =92 3/4"
W16x26 CAM =93"
W16x26 CAM =93 1/4"
W16x26 CAM =93 1/2"
W16x26 CAM =93 3/4"
W16x26 CAM =94"
W16x26 CAM =94 1/4"
W16x26 CAM =94 1/2"
W16x26 CAM =94 3/4"
W16x26 CAM =95"
W16x26 CAM =95 1/4"
W16x26 CAM =95 1/2"
W16x26 CAM =95 3/4"
W16x26 CAM =96"
W16x26 CAM =96 1/4"
W16x26 CAM =96 1/2"
W16x26 CAM =96 3/4"
W16x26 CAM =97"
W16x26 CAM =97 1/4"
W16x26 CAM =97 1/2"
W16x26 CAM =97 3/4"
W16x26 CAM =98"
W16x26 CAM =98 1/4"
W16x26 CAM =98 1/2"
W16x26 CAM =98 3/4"
W16x26 CAM =99"
W16x26 CAM =99 1/4"
W16x26 CAM =99 1/2"
W16x26 CAM =99 3/4"
W16x26 CAM =100"
W16x26 CAM =100 1/4"
W16x26 CAM =100 1/2"
W16x26 CAM =100 3/4"
W16x26 CAM =101"
W16x26 CAM =101 1/4"
W16x26 CAM =101 1/2"
W16x26 CAM =101 3/4"
W16x26 CAM =102"
W16x26 CAM =102 1/4"
W16x26 CAM =102 1/2"
W16x26 CAM =102 3/4"
W16x26 CAM =103"
W16x26 CAM =103 1/4"
W16x26 CAM =103 1/2"
W16x26 CAM =103 3/4"
W16x26 CAM =104"
W16x26 CAM =104 1/4"
W16x26 CAM =104 1/2"
W16x26 CAM =104 3/4"
W16x26 CAM =105"
W16x26 CAM =105 1/4"
W16x26 CAM =105 1/2"
W16x26 CAM =105 3/4"
W16x26 CAM =106"
W16x26 CAM =106 1/4"
W16x26 CAM =106 1/2"
W16x26 CAM =106 3/4"
W16x26 CAM =107"
W16x26 CAM =107 1/4"
W16x26 CAM =107 1/2"
W16x26 CAM =107 3/4"
W16x26 CAM =108"
W16x26 CAM =108 1/4"
W16x26 CAM =108 1/2"
W16x26 CAM =108 3/4"
W16x26 CAM =109"
W16x26 CAM =109 1/4"
W16x26 CAM =109 1/2"
W16x26 CAM =109 3/4"
W16x26 CAM =110"
W16x26 CAM =110 1/4"
W16x26 CAM =110 1/2"
W16x26 CAM =110 3/4"
W16x26 CAM =111"
W16x26 CAM =111 1/4"
W16x26 CAM =111 1/2"
W16x26 CAM =111 3/4"
W16x26 CAM =112"
W16x26 CAM =112 1/4"
W16x26 CAM =112 1/2"
W16x26 CAM =112 3/4"
W16x26 CAM =113"
W16x26 CAM =113 1/4"
W16x26 CAM =113 1/2"
W16x26 CAM =113 3/4"
W16x26 CAM =114"
W16x26 CAM =114 1/4"
W16x26 CAM =114 1/2"
W16x26 CAM =114 3/4"
W16x26 CAM =115"
W16x26 CAM =115 1/4"
W16x26 CAM =115 1/2"
W16x26 CAM =115 3/4"
W16x26 CAM =116"
W16x26 CAM =116 1/4"
W16x26 CAM =116 1/2"
W16x26 CAM =116 3/4"
W16x26 CAM =117"
W16x26 CAM =117 1/4"
W16x26 CAM =117 1/2"
W16x26 CAM =117 3/4"
W16x26 CAM =118"
W16x26 CAM =118 1/4"
W16x26 CAM =118 1/2"
W16x26 CAM =118 3/4"
W16x26 CAM =119"
W16x26 CAM =119 1/4"
W16x26 CAM =119 1/2"
W16x26 CAM =119 3/4"
W16x26 CAM =120"
W16x26 CAM =120 1/4"
W16x26 CAM =120 1/2"
W16x26 CAM =120 3/4"
W16x26 CAM =121"
W16x26 CAM =121 1/4"
W16x26 CAM =121 1/2"
W16x26 CAM =121 3/4"
W16x26 CAM =122"
W16x26 CAM =122 1/4"
W16x26 CAM =122 1/2"
W16x26 CAM =122 3/4"
W16x26 CAM =123"
W16x26 CAM =123 1/4"
W16x26 CAM =123 1/2"
W16x26 CAM =123 3/4"
W16x26 CAM =124"
W16x26 CAM =124 1/4"
W16x26 CAM =124 1/2"
W16x26 CAM =124 3/4"
W16x26 CAM =125"
W16x26 CAM =125 1/4"
W16x26 CAM =125 1/2"
W16x26 CAM =125 3/4"
W16x26 CAM =126"
W16x26 CAM =126 1/4"
W16x26 CAM =126 1/2"
W16x26 CAM =126 3/4"
W16x26 CAM =127"
W16x26 CAM =127 1/4"
W16x26 CAM =127 1/2"
W16x26 CAM =127 3/4"
W16x26 CAM =128"
W16x26 CAM =128 1/4"
W16x26 CAM =128 1/2"
W16x26 CAM =128 3/4"
W16x26 CAM =129"
W16x26 CAM =129 1/4"
W16x26 CAM =129 1/2"
W16x26 CAM =129 3/4"
W16x26 CAM =130"
W16x26 CAM =130 1/4"
W16x26 CAM =130 1/2"
W16x26 CAM =130 3/4"
W16x26 CAM =131"
W16x26 CAM =131 1/4"
W16x26 CAM =131 1/2"
W16x26 CAM =131 3/4"
W16x26 CAM =132"
W16x26 CAM =132 1/4"
W16x26 CAM =132 1/2"
W16x26 CAM =132 3/4"
W16x26 CAM =133"
W16x26 CAM =133 1/4"
W16x26 CAM =133 1/2"
W16x26 CAM =133 3/4"
W16x26 CAM =134"
W16x26 CAM =134 1/4"
W16x26 CAM =134 1/2"
W16x26 CAM =134 3/4"
W16x26 CAM =135"
W16x26 CAM =135 1/4"
W16x26 CAM =135 1/2"
W16x26 CAM =135 3/4"
W16x26 CAM =136"
W16x26 CAM =136 1/4"
W16x26 CAM =136 1/2"
W16x26 CAM =136 3/4"
W16x26 CAM =137"
W16x26 CAM =137 1/4"
W16x26 CAM =137 1/2"
W16x26 CAM =137 3/4"
W16x26 CAM =138"
W16x26 CAM =138 1/4"
W16x26 CAM =138 1/2"
W16x26 CAM =138 3/4"
W16x26 CAM =139"
W16x26 CAM =139 1/4"
W16x26 CAM =139 1/2"
W16x26 CAM =139 3/4"
W16x26 CAM =140"
W16x26 CAM =140 1/4"
W16x26 CAM =140 1/2"
W16x26 CAM =140 3/4"
W16x26 CAM =141"
W16x26 CAM =141 1/4"
W16x26 CAM =141 1/2"
W16x26 CAM =141 3/4"
W16x26 CAM =142"
W16x26 CAM =142 1/4"
W16x26 CAM =142 1/2"
W16x26 CAM =142 3/4"
W16x26 CAM =143"
W16x26 CAM =143 1/4"
W16x26 CAM =143 1/2"
W16x26 CAM =143 3/4"
W16x26 CAM =144"
W16x26 CAM =144 1/4"
W16x26 CAM =144 1/2"
W16x26 CAM =144 3/4"
W16x26 CAM =145"
W16x26 CAM =145 1/4"
W16x26 CAM =145 1/2"
W16x26 CAM =145 3/4"
W16x26 CAM =146"
W16x26 CAM =146 1/4"
W16x26 CAM =146 1/2"
W16x26 CAM =146 3/4"
W16x26 CAM =147"
W16x26 CAM =147 1/4"
W16x26 CAM =147 1/2"
W16x26 CAM =147 3/4"
W16x26 CAM =148"
W16x26 CAM =148 1/4"
W16x26 CAM =148 1/2"
W16x26 CAM =148 3/4"
W16x26 CAM =149"
W16x26 CAM =149 1/4"
W16x26 CAM =149 1/2"
W16x26 CAM =149 3/4"
W16x26 CAM =150"
W16x26 CAM =150 1/4"
W16x26 CAM =150 1/2"
W16x26 CAM =150 3/4"
W16x26 CAM =151"
W16x26 CAM =151 1/4"
W16x26 CAM =151 1/2"
W16x26 CAM =151 3/4"
W16x26 CAM =152"
W16x26 CAM =152 1/4"
W16x26 CAM =152 1/2"
W16x26 CAM =152 3/4"
W16x26 CAM =153"
W16x26 CAM =153 1/4"
W16x26 CAM =153 1/2"
W16x26 CAM =153 3/4"
W16x26 CAM =154"
W16x26 CAM =154 1/4"
W16x26 CAM =154 1/2"
W16x26 CAM =154 3/4"
W16x26 CAM =155"
W16x26 CAM =155 1/4"
W16x26 CAM =155 1/2"
W16x26 CAM =155 3/4"
W16x26 CAM =156"
W16x26 CAM =156 1/4"
W16x26 CAM =156 1/2"
W16x26 CAM =156 3/4"
W16x26 CAM =157"
W16x26 CAM =157 1/4"
W16x26 CAM =157 1/2"
W16x26 CAM =157 3/4"
W16x26 CAM =158"
W16x26 CAM =158 1/4"
W16x26 CAM =158 1/2"
W16x26 CAM =158 3/4"
W16x26 CAM =159"
W16x26 CAM =159 1/4"
W16x26 CAM =159 1/2"
W16x26 CAM =159 3/4"
W16x26 CAM =160"
W16x26 CAM =160 1/4"
W16x26 CAM =160 1/2"
W16x26 CAM =160 3/4"
W16x26 CAM =161"
W16x26 CAM =161 1/4"
W16x26 CAM =161 1/2"
W16x26 CAM =161 3/4"
W16x26 CAM =162"
W16x26 CAM =162 1/4"
W16x26 CAM =162 1/2"
W16x26 CAM =162 3/4"
W16x26 CAM =163"
W16x26 CAM =163 1/4"
W16x26 CAM =163 1/2"
W16x26 CAM =163 3/4"
W16x26 CAM =164"
W16x26 CAM =164 1/4"
W16x26 CAM =164 1/2"
W16x26 CAM =164 3/4"
W16x26 CAM =165"
W16x26 CAM =165 1/4"
W16x26 CAM =165 1/2"
W16x26 CAM =165 3/4"
W16x26 CAM =166"
W16x26 CAM =166 1/4"
W16x26 CAM =166 1/2"
W16x26 CAM =166 3/4"
W16x26 CAM =167"
W16x26 CAM =167 1/4"
W16x26 CAM =167 1/2"
W16x26 CAM =167 3/4"
W16x26 CAM =168"
W16x26 CAM =168 1/4"
W16x26 CAM =168 1/2"
W16x26 CAM =168 3/4"
W16x26 CAM =169"
W16x26 CAM =169 1/4"
W16x26 CAM =169 1/2"
W16x26 CAM =169 3/4"
W16x26 CAM =170"
W16x26 CAM =170 1/4"
W16x26 CAM =170 1/2"
W16x26 CAM =170 3/4"
W16x26 CAM =171"
W16x26 CAM =171 1/4"
W16x26 CAM =171 1/2"
W16x26 CAM =171 3/4"
W16x26 CAM =172"
W16x26 CAM =172 1/4"
W16x26 CAM =172 1/2"
W16x26 CAM =172 3/4"
W16x26 CAM =173"
W16x26 CAM =173 1/4"
W16x26 CAM =173 1/2"
W16x26 CAM =173 3/4"
W16x26 CAM =174"
W16x26 CAM =174 1/4"
W16x26 CAM =174 1/2"
W16x26 CAM =174 3/4"
W16x26 CAM =175"
W16x26 CAM =175 1/4"
W16x26 CAM =175 1/2"
W16x26 CAM =175 3/4"
W16x26 CAM =176"
W16x26 CAM =176 1/4"
W16x26 CAM =176 1/2"
W16x26 CAM =176 3/4"
W16x26 CAM =177"
W16x26 CAM =177 1/4"
W16x26 CAM =177 1/2"
W16x26 CAM =177 3/4"
W16x26 CAM =178"
W16x26 CAM =178 1/4"
W16x26 CAM =178 1/2"
W16x26 CAM =178 3/4"
W16x26 CAM =179"
W16x26 CAM =179 1/4"
W16x26 CAM =179 1/2"
W16x26 CAM =179 3/4"
W16x26 CAM =180"
W16x26 CAM =180 1/4"
W16x26 CAM =180 1/2"
W16x26 CAM =180 3/4"
W16x26 CAM =181"
W16x26 CAM =181 1/4"
W16x26 CAM =181 1/2"
W16x26 CAM =181 3/4"
W16x26 CAM =182"
W16x26 CAM =182 1/4"
W16x26 CAM =182 1/2"
W16x26 CAM =182 3/4"
W16x26 CAM =183"
W16x26 CAM =183 1/4"
W16x26 CAM =183 1/2"
W16x26 CAM =183 3/4"
W16x26 CAM =184"
W16x26 CAM =184 1/4"
W16x26 CAM =184 1/2"
W16x26 CAM =184 3/4"
W16x26 CAM =185"
W16x26 CAM =185 1/4"
W16x26 CAM =185 1/2"
W16x26 CAM =185 3/4"
W16x26 CAM =186"
W16x26 CAM =186 1/4"
W16x26 CAM =186 1/2"
W16x26 CAM =186 3/4"
W16x26 CAM =187"
W16x26 CAM =187 1/4"
W16x26 CAM =187 1/2"
W16x26 CAM =187 3/4"
W16x26 CAM =188"
W16x26 CAM =188 1/4"
W16x26 CAM =188 1/2"
W16x26 CAM =188 3/4"
W16x26 CAM =189"
W16x26 CAM =189 1/4"
W16x26 CAM =189 1/2"
W16x26 CAM =189 3/4"
W16x26 CAM =190"
W16x26 CAM =190 1/4"
W16x26 CAM =190 1/2"
W16x26 CAM =190 3/4"
W16x26 CAM =191"
W16x26 CAM =191 1/4"
W16x26 CAM =191 1/2"
W16x26 CAM =191 3/4"
W16x26 CAM =192"
W16x26 CAM =192 1/4"
W16x26 CAM =192 1/2"
W16x26 CAM =192 3/4"
W16x26 CAM =193"
W16x26 CAM =193 1/4"
W16x26 CAM =193 1/2"
W16x26 CAM =193 3/4"
W16x26 CAM =194"
W16x26 CAM =194 1/4"
W16x26 CAM =194 1/2"
W16x26 CAM =194 3/4"
W16x26 CAM =195"
W16x26 CAM =195 1/4"
W16x26 CAM =195 1/2"
W16x26 CAM =195 3/4"
W16x26 CAM =196"
W16x26 CAM =196 1/4"
W16x26 CAM =196 1/2"
W16x26 CAM =196 3/4"
W16x26 CAM =197"
W16x26 CAM =197 1/4"
W16x26 CAM =197 1/2"
W16x26 CAM =197 3/4"
W16x26 CAM =198"
W16x26 CAM =198 1/4"
W16x26 CAM =198 1/2"
W16x26 CAM =198 3/4"
W16x26 CAM =199"
W16x26 CAM =199 1/4"
W16x26 CAM =199 1/2"
W16x26 CAM =199 3/4"
W16x26 CAM =200"
W16x26 CAM =200 1/4"
W16x26 CAM =200 1/2"
W16x26 CAM =200 3/4"
W16x26 CAM =201"
W16x26 CAM =201 1/4"
W16x26 CAM =201 1/2"
W16x26 CAM =201 3/4"
W16x26 CAM =202"
W16x26 CAM =202 1/4"
W16x26 CAM =202 1/2"
W16x26 CAM =202 3/4"
W16x26 CAM =203"
W16x26 CAM =203 1/4"
W16x26 CAM =203 1/2"
W16x26 CAM =203 3/4"
W16x26 CAM =204"
W16x26 CAM =204 1/4"
W16x26 CAM =204 1/2"
W16x26 CAM =204 3/4"
W16x26 CAM =205"
W16x26 CAM =205 1/4"
W16x26 CAM =205 1/2"
W16x26 CAM =205 3/4"
W16x26 CAM =206"
W16x26 CAM =206 1/4"
W16x26 CAM =206 1/2"
W16x26 CAM =206 3/4"
W16x26 CAM =207"
W16x26 CAM =207 1/4"
W16x26 CAM =207 1/2"
W16x26 CAM =207 3/4"
W16x26 CAM =208"
W16x26 CAM =208 1/4"
W16x26 CAM =208 1/2"
W16x26 CAM =208 3/4"
W16x26 CAM =209"
W16x26 CAM =209 1/4"
W16x26 CAM =209 1/2"
W16x26 CAM =209 3/4"
W16x26 CAM =210"
W16x26 CAM =210 1/4"
W16x26 CAM =210 1/2"
W16x26 CAM =210 3/4"
W16x26 CAM =211"
W16x26 CAM =211 1/4"
W16x26 CAM =211 1/2"
W16x26 CAM =211 3/4"
W16x26 CAM =212"
W16x26 CAM =212 1/4"
W16x26 CAM =212 1/2"
W16x26 CAM =212 3/4"
W16x26 CAM =213"
W16x26 CAM =213 1/4"
W16x26 CAM =213 1/2"
W16x26 CAM =213 3/4"
W16x26 CAM =214"
W16x26 CAM =214 1/4"
W16x26 CAM =214 1/2"
W16x26 CAM =214 3/4"
W16x26 CAM =215"
W16x26 CAM =215 1/4"
W16x26 CAM =215 1/2"
W16x26 CAM =215 3/4"
W16x26 CAM =216"
W16x26 CAM =216 1/4"
W16x26 CAM =216 1/2"
W16x26 CAM =216 3/4"
W16x26 CAM =217"
W16x26 CAM =217 1/4"
W16x26 CAM =217 1/2"
W16x26 CAM =217 3/4"
W16x26 CAM =218"
W16x26 CAM =218 1/4"
W16x26 CAM =218 1/2"
W16x26 CAM =218 3/4"
W16x26 CAM =219"
W16x26 CAM =219 1/4"
W16x26 CAM =219 1/2"
W16x26 CAM =219 3/4"
W16x26 CAM =220"
W16x26 CAM =220 1/4"
W16x26 CAM =220 1/2"
W16x26 CAM =220 3/4"
W16x26 CAM =221"
W16x26 CAM =221 1/4"
W16x26 CAM =221 1/2"
W16x26 CAM =221 3/4"
W16x26 CAM =222"
W16x26 CAM =222 1/4"
W16x26 CAM =222 1/2"
W16x26 CAM =222 3/4"
W16x26 CAM =223"
W16x26 CAM =223 1/4"
W16x26 CAM =223 1/2"
W16x26 CAM =223 3/4"
W16x26 CAM =224"
W16x26 CAM =224 1/4"
W16x26 CAM =224 1/2"
W16x26 CAM =224 3/4"
W16x26 CAM =225"
W16x26 CAM =225 1/4"
W16x26 CAM =225 1/2"
W16x26 CAM =225 3/4"
W16x26 CAM =226"
W16x26 CAM =226 1/4"
W16x26 CAM =226 1/2"
W16x26 CAM =226 3/4"
W16x26 CAM =227"
W16x26 CAM =227 1/4"
W16x26 CAM =227 1/2"
W16x26 CAM =227 3/4"
W16x26 CAM =228"
W16x26 CAM =228 1/4"
W16x26 CAM =228 1/2"
W16x26 CAM =228 3/4"
W16x26 CAM =229"
W16x26 CAM =229 1/4"
W16x26 CAM =229 1/2"
W16x26 CAM =229 3/4"
W16x26 CAM =230"
W16x26 CAM =230 1/4"
W16x26 CAM =230 1/2"
W16x26 CAM =230 3/4"
W16x26 CAM =231"
W16x26 CAM =231 1/4"
W16x26 CAM =231 1/2"
W16x26 CAM =231 3/4"
W16x26 CAM =232"
W16x26 CAM =232 1/4"
W16x26 CAM =232 1/2"
W16x26 CAM =232 3/4"
W16x26 CAM =233"
W16x26 CAM =233 1/4"
W16x26 CAM =233 1/2"
W16x26 CAM =233 3/4"
W16x26 CAM =234"
W16x26 CAM =234 1/4"
W16x26 CAM =234 1/2"
W16x26 CAM =234 3/4"
W16x26 CAM =235"
W16x26 CAM =235 1/4"
W16x26 CAM =235 1/2"
W16x26 CAM =235 3/4"
W16x26 CAM =236"
W16x26 CAM =236 1/4"
W16x26 CAM =236 1/2"
W16x26 CAM =236 3/4"
W16x26 CAM =237"
W16x26 CAM =237 1/4"
W16x26 CAM =237 1/2"
W16x26 CAM =237 3/4"
W16x26 CAM =238"
W16x26 CAM =238 1/4"
W16x26 CAM =238 1/2"
W16x26 CAM =238 3/4"
W16x26 CAM =239"
W16x26 CAM =239 1/4"
W16x26 CAM =239 1/2"
W16x26 CAM =239 3/4"
W16x26 CAM =240"
W16x26 CAM =240 1/4"
W16x26 CAM =240 1/2"
W16x26 CAM =240 3/4"
W16x26 CAM =241"
W16x26 CAM =241 1/4"
W16x26 CAM =241 1/2"
W16x26 CAM =241 3/4"
W16x26 CAM =242"
W16x26 CAM =242 1/4"
W16x26 CAM =242 1/2"
W16x26 CAM =242 3/4"
W16x26 CAM =243"
W16x26 CAM =243 1/4"
W16x26 CAM =243 1/2"
W16x26 CAM =243 3/4"
W16x26 CAM =244"
W16x26 CAM =244 1/4"
W16x26 CAM =244 1/2"
W16x26 CAM =244 3/4"
W16x26 CAM =245"
W16x26 CAM =245 1/4"
W16x26 CAM =245 1/2"
W16x26 CAM =245 3/4"
W16x26 CAM =246"
W16x26 CAM =246 1/4"
W16x26 CAM =246 1/2"
W16x26 CAM =246 3/4"
W16x26 CAM =247"
W16x26 CAM =247 1/4"
W16x26 CAM =247 1/2"
W16x26 CAM =247 3/4"
W16x26 CAM =248"
W16x26 CAM =248 1/4"
W16x26 CAM =248 1/2"
W16x26 CAM =248 3/4"
W16x26 CAM =249"
W16x26 CAM =249 1/4"
W16x26 CAM =249 1/2"
W16x26 CAM =249 3/4"
W16x26 CAM =250"
W16x26 CAM =250 1/4"
W16x26 CAM =250 1/2"
W16x26 CAM =250 3/4"
W16x26 CAM =251"
W16x26 CAM =251 1/4"
W16x26 CAM =251 1/2"
W16x26 CAM =251 3/4"
W16x26 CAM =252"
W16x26 CAM =252 1/4"
W16x26 CAM =252 1/2"
W16x26 CAM =252 3/4"
W16x26 CAM =253"
W16x26 CAM =253 1/4"
W16x26 CAM =253 1/2"
W16x26 CAM =253 3/4"
W16x26 CAM =254"
W16x26 CAM =254 1/4"
W16x26 CAM =254 1/2"
W16x26 CAM =254 3/4"
W16x26 CAM =255"
W16x26 CAM =255 1/4"
W16x26 CAM =255 1/2"
W16x26 CAM =255 3/4"
W16x26 CAM =256"
W16x26 CAM =256 1/4"
W16x26 CAM =256 1/2"
W16x26 CAM =256 3/4"
W16x26 CAM =257"
W16x26 CAM =257 1/4"
W16x26 CAM =257 1/2"
W16x26 CAM =257 3/4"
W16x26 CAM =258"
W16x26 CAM =258 1/4"
W16x26 CAM =258 1/2"
W16x26 CAM =258 3/4"
W16x26 CAM =259"
W16x26 CAM =259 1/4"
W16x26 CAM =259 1/2"
W16x26 CAM =259 3/4"
W16x26 CAM =260"
W16x26 CAM =260 1/4"
W16x26 CAM =260 1/2"
W16x26 CAM =260 3/4"
W16x26 CAM =261"
W16x26 CAM =261 1/4"
W16x26 CAM =261 1/2"
W16x26 CAM =261 3/4"
W16x26 CAM =262"
W16x26 CAM =262 1/4"
W16x26 CAM =262 1/2"
W16x26 CAM =262 3/4"
W16x26 CAM =263"
W16x26 CAM =263 1/4"
W16x26 CAM =263 1/2"
W16x26 CAM =263 3/4"

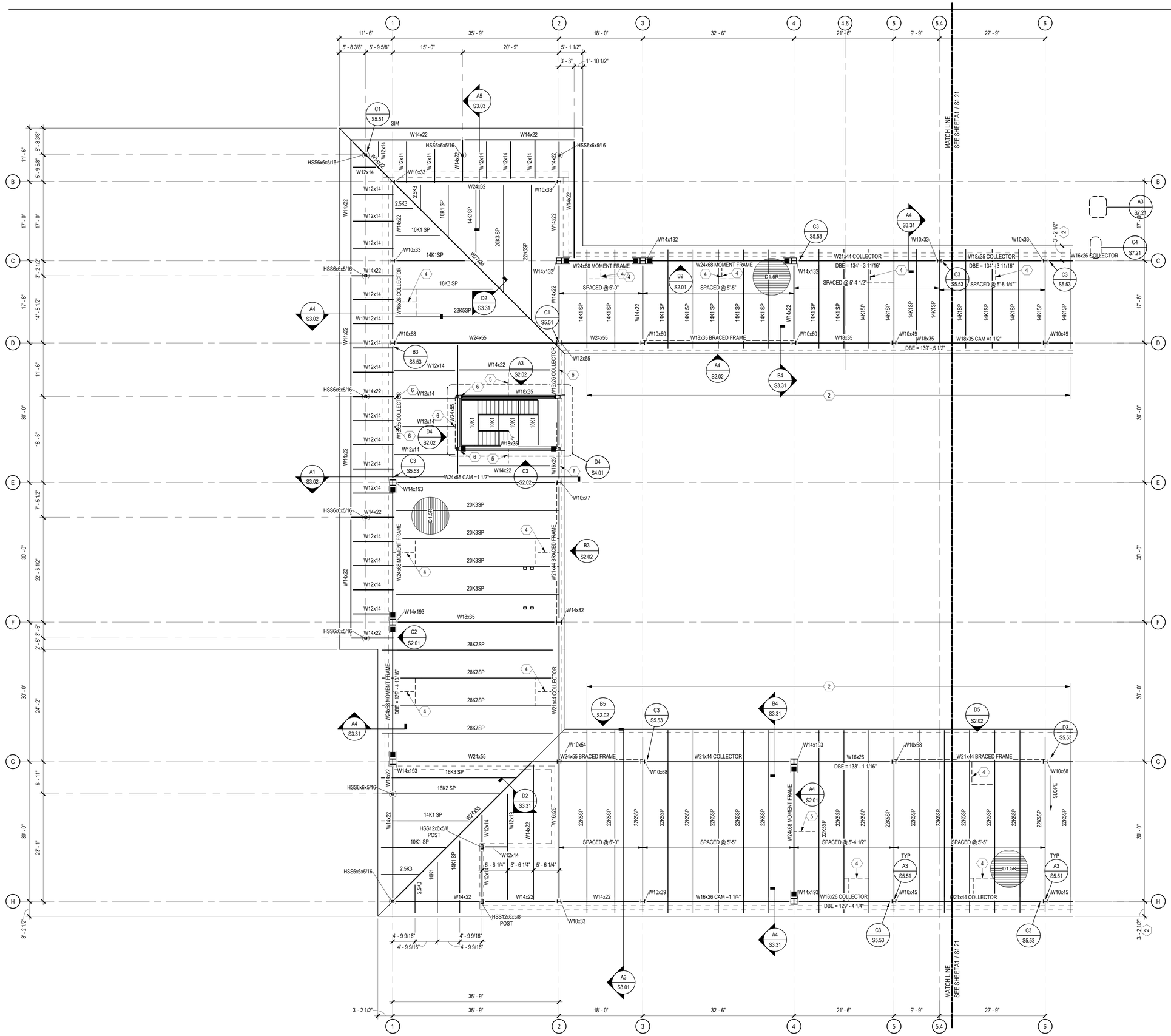

A1 ROOF FRAMING PLAN - SECTOR 2

SCALE: 1/8" = 1'-0"

GENERAL SHEET NOTES

1. SOME SHEET KEYNOTES MAY NOT APPLY TO THIS SHEET.
2. NOTE TO ERECTOR: LATERAL STABILITY OF THE STEEL FRAME IS DEPENDENT UPON THE MOMENT FRAMES. THE ERECTOR SHALL PROVIDE TEMPORARY BRACING OF THE STEEL FRAME IN ACCORDANCE WITH SECTION 7.10 OF THE AISC CODE OF STANDARD PRACTICES.
3. DIMENSIONS ARE TO THE FACE OF STUD UNLESS NOTED OTHERWISE.
4. SEE ARCHITECTURAL DRAWINGS FOR MASONRY DIMENSIONS NOT SHOWN.
5. EXISTING CONSTRUCTION IS PER AVAILABLE EXISTING DRAWINGS. ALL EXISTING CONSTRUCTION AND DIMENSIONS SHALL BE VERIFIED PRIOR TO CONSTRUCTION. SHOULD CONDITIONS VARY FROM THOSE SHOWN, CONTACT ENGINEER BEFORE PROCEEDING.
6. BEAMS AND JOISTS ARE SPACED EQUALLY BETWEEN GRIDS AND COLUMNS UNLESS NOTED OTHERWISE.
7. PROVIDE JOIST BRIDGING PER THE 42ND EDITION OF THE SJI SPECIFICATIONS AND OSHA REQUIREMENTS.
8. STEEL JOIST MANUFACTURER SHALL DESIGN ROOF JOISTS AND ROOF JOIST GIRDERS SUPPORTING MECHANICAL UNITS FOR 1.2x MECHANICAL UNIT WEIGHTS SHOWN. USE 28 PSF DEAD LOAD AND 20 PSF LIVE LOAD UNLESS NOTED OTHERWISE. CONTRACTOR SHALL VERIFY ACTUAL MECHANICAL LOADS. NOTIFY STEEL JOIST MANUFACTURER OF ANY DISCREPANCIES.
9. STRUCTURAL COLD FORMED METAL STUDS SHALL BE 6" IN WIDTH, UNLESS NOTED OTHERWISE.
10. SEE SHEET S7.00 SERIES SHEETS FOR TYPICAL ROOF FRAMING SECTIONS.
11. SEE SHEET S6.01 FOR SCHEDULES.
12. ▶ DENOTES MOMENT CONNECTION PER TYPICAL DETAILS.
13. ■ DENOTES SIDEPLATE MOMENT CONNECTION. SEE SIDEPLATE DRAWINGS.
14. PROVIDE HSSSxJOIST SEAT DEPTHx1/4 BETWEEN JOISTS AT ALL BEAMS LABELED AS ⬡ : MOMENT FRAME, BRACED FRAME, AND COLLECTOR. SEE C2 / S7.41

SHEET KEYNOTE

1. MECHANICAL UNIT, COORDINATE EXACT SIZE AND LOCATION WITH MECHANICAL DRAWINGS.
2. JOIST EXTENDED END. DESIGN EXTENDED END FOR 20 PSF DEAD LOAD, 20 PSF LIVE LOAD, AND ANY POSITIVE OR NEGATIVE WIND PRESSURES PER ROOF WIND LOADING DIAGRAM ON S0.03. DEPTH OF EXTENDED END PER JOIST MANUFACTURER.
3. HSS8x6x1/2 ELEVATOR RAIL SUPPORT POST. COORDINATE EXACT LOCATION WITH ELEVATOR MANUFACTURER. SEE A2 / S5.41 , B2 / S5.41, C2 / S5.41, AND D3 / S5.41
4. BOTTOM FLANGE BRACE AT EQUAL SPACING, UNLESS NOTED OTHERWISE. BRACE TO BE ATTACHED TO BOTTOM FLANGE OF BEAM NOTED AS MOMENT FRAME OR BRACED FRAME AND TO TOP FLANGE OF ADJACENT BEAM OR JOIST. SEE B3 / S5.52. JOISTS TO BE DESIGNED FOR 1,500# VERTICAL (REVERSIBLE) WIND AND SEISMIC LOAD FROM BRACE.
5. BOTTOM FLANGE BRACING AT EQUAL SPACING, UNLESS NOTED OTHERWISE. SEE D1 / S5.51 . JOISTS TO BE DESIGNED FOR 1,500# VERTICAL (REVERSIBLE) WIND AND SEISMIC LOAD FROM BRACE.
6. BOTTOM FLANGE BRACING ANGLE. SEE A3 / S5.52

James R. Childers Architect, Inc.
45 South 4th Street
Fort Smith, AR 72901
479-783-2480
www.childersarchitect.com

PROFESSIONAL SEAL:

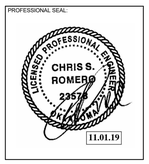

CONSULTANT LOGO:

Chavez-Grieves consulting engineers, inc.
4700 Lincoln Road NE, Suite 102 Albuquerque, NM 87109
505-344-4080 505-343-8729 (fax)

CLIENT:

THE CHEROKEE NATION
TRUST LAND
SEPT. 6, 1839

WILMA P. MANKILLER HEALTH CENTER EXPANSION

STILWELL, OKLAHOMA

KEY PLAN:

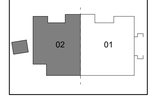

PROJECT PHASE:

BID PACKAGE 01

REVISIONS		
#	DATE	DESCRIPTION

DATE:	JOB NUMBER:
11-01-19	18-01.01

SHEET NUMBER:

S1.22

ROOF FRAMING PLAN - SECTOR 2

SIDEPLATE CONNECTION NOTES

AXX INDICATES SIDEPLATE CONNECTION PER SHEETS X/XX - X/XX.

MX INDICATES MISCELLANEOUS SIDEPLATE DETAIL PER SHEETS X/XX -X/XX.

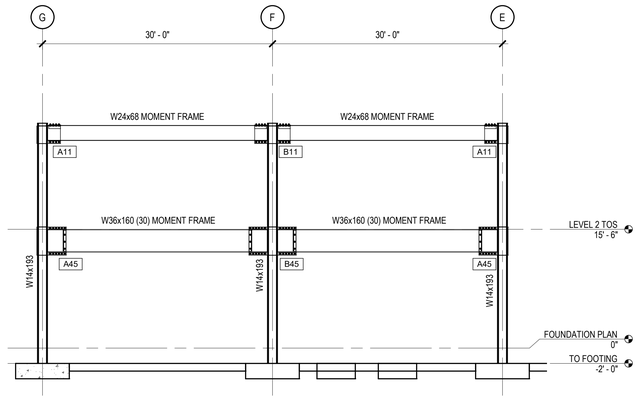

C2 MOMENT FRAME ELEVATION

SCALE: 1/8" = 1'-0"

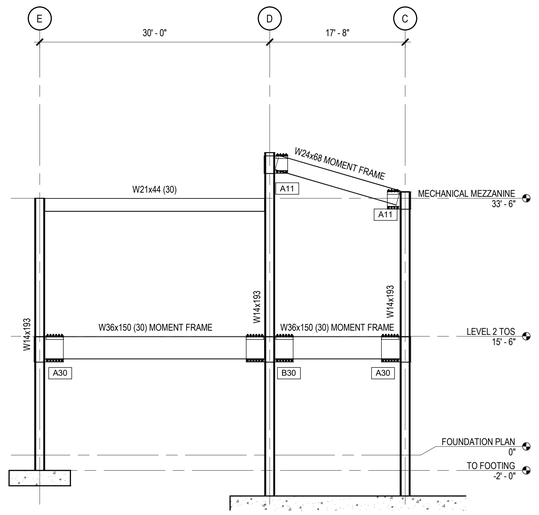

C4 MOMENT FRAME ELEVATION

SCALE: 1/8" = 1'-0"

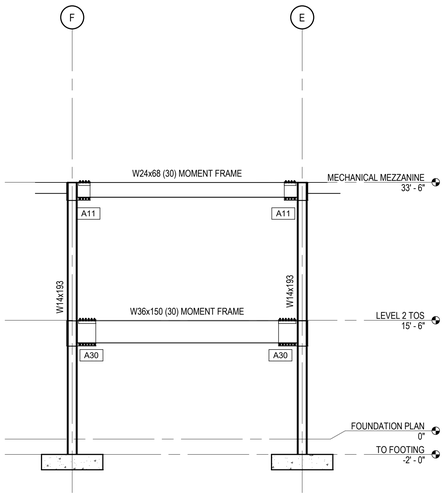

B4 MOMENT FRAME ELEVATION

SCALE: 1/8" = 1'-0"

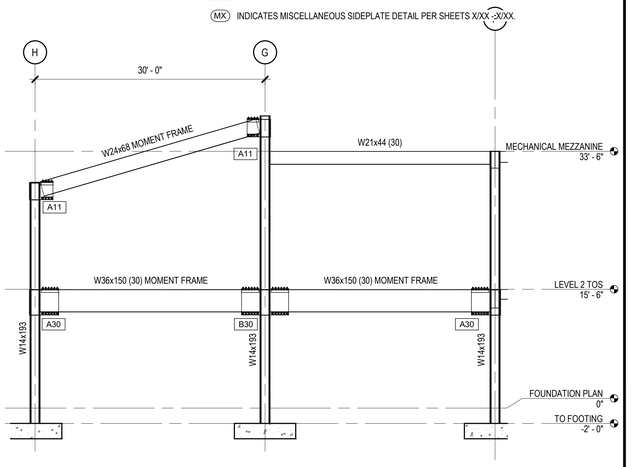

A4 MOMENT FRAME ELEVATION

SCALE: 1/8" = 1'-0"

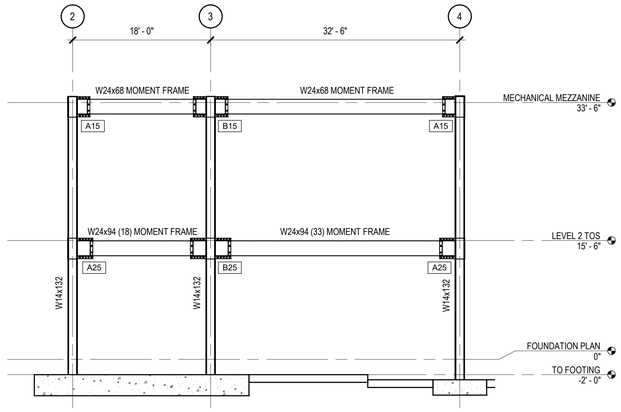

B1 MOMENT FRAME ELEVATION

SCALE: 1/8" = 1'-0"

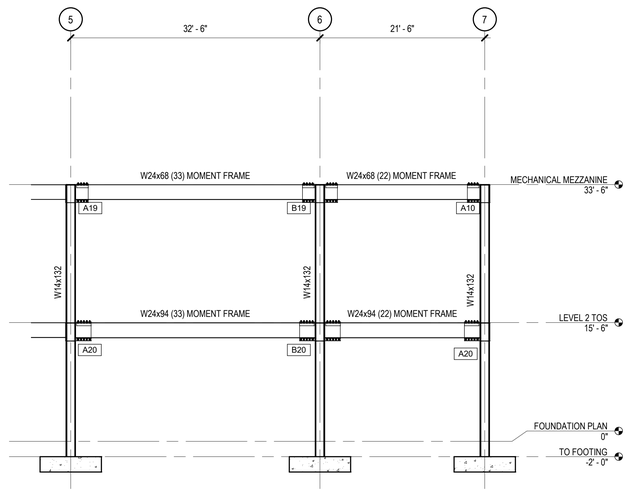

B2 MOMENT FRAME ELEVATION

SCALE: 1/8" = 1'-0"

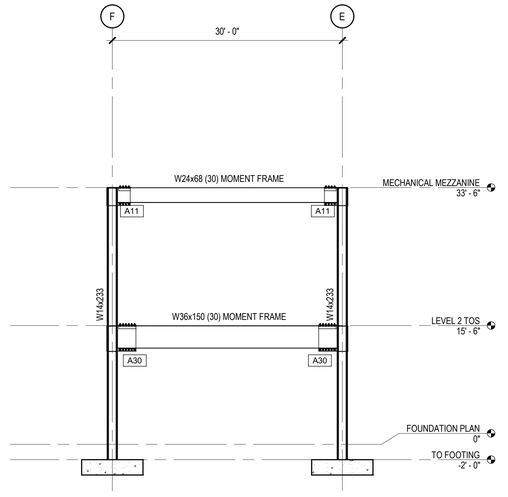

B5 MOMENT FRAME ELEVATION

SCALE: 1/8" = 1'-0"

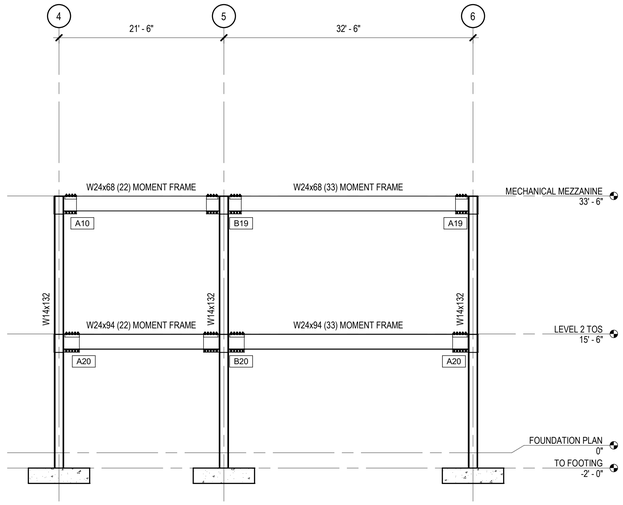

A1 MOMENT FRAME ELEVATION

SCALE: 1/8" = 1'-0"

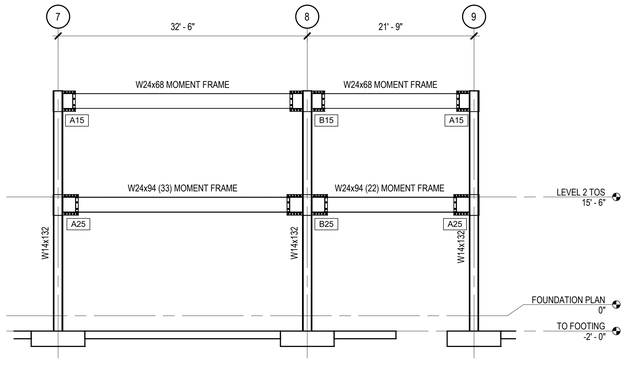

A2 MOMENT FRAME ELEVATION

SCALE: 1/8" = 1'-0"

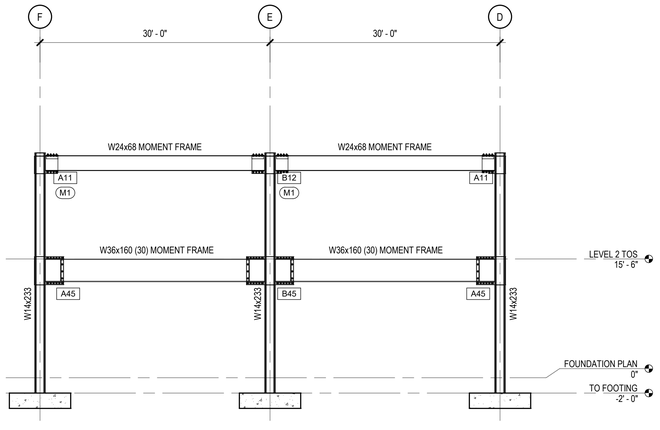

A5 MOMENT FRAME ELEVATION

SCALE: 1/8" = 1'-0"

James R. Childers Architect, Inc.
45 South 4th Street
Fort Smith, AR 72901
479-783-2480
www.childersarchitect.com

PROFESSIONAL SEAL:

LICENSED PROFESSIONAL ENGINEER
CHRIS S. ROMERO
23576
OKLAHOMA
11.01.19

CONSULTANT LOGO:

Chavez-Grieves
consulting engineers, inc.
4700 Lincoln Road NE, Suite 102 Albuquerque, NM 87109
505-344-4080 505-343-8759 (fax)

CLIENT:

THE CHEROKEE NATION
TRIBAL SEAL
SEPT. 6, 1839

WILMA P. MANKILLER HEALTH CENTER EXPANSION

STILWELL, OKLAHOMA

KEY PLAN:

PROJECT PHASE:

BID PACKAGE 01

REVISIONS		
#	DATE	DESCRIPTION

DATE: 11-01-19

JOB NUMBER: 18-01.01

SHEET NUMBER: S2.01

MOMENT FRAME ELEVATIONS



D4 BRACED FRAME ELEVATION
SCALE: 1/4" = 1'-0"

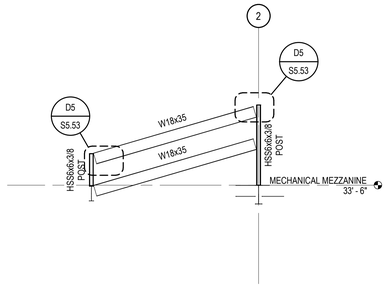

C3 BRACED FRAME ELEVATION
SCALE: 1/8" = 1'-0"

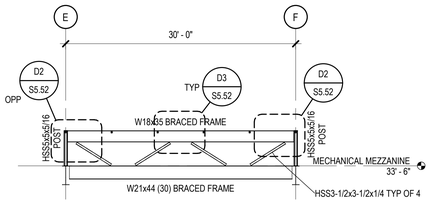

C4 BRACED FRAME ELEVATION
SCALE: 1/8" = 1'-0"

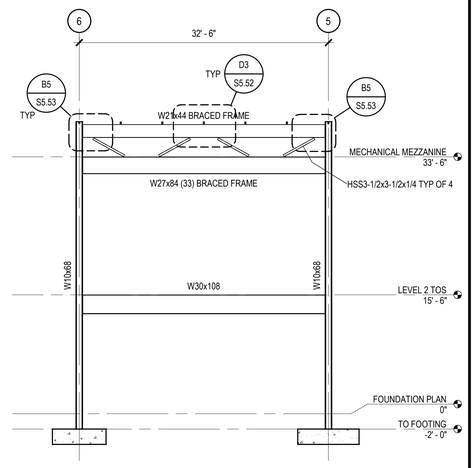

D5 BRACED FRAME ELEVATION
SCALE: 1/8" = 1'-0"

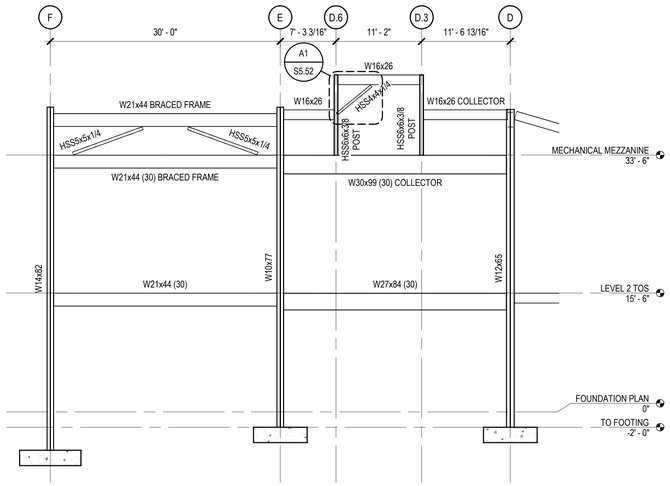

B3 BRACED FRAME ELEVATION
SCALE: 1/8" = 1'-0"

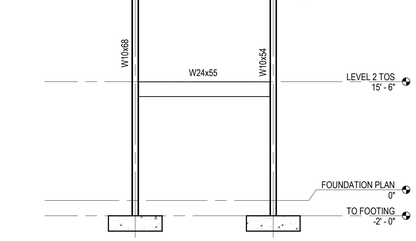

B5 BRACED FRAME ELEVATION
SCALE: 1/8" = 1'-0"

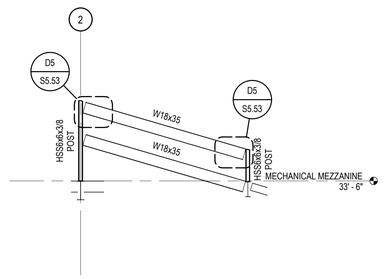

A3 MOMENT FRAME ELEVATION
SCALE: 1/8" = 1'-0"

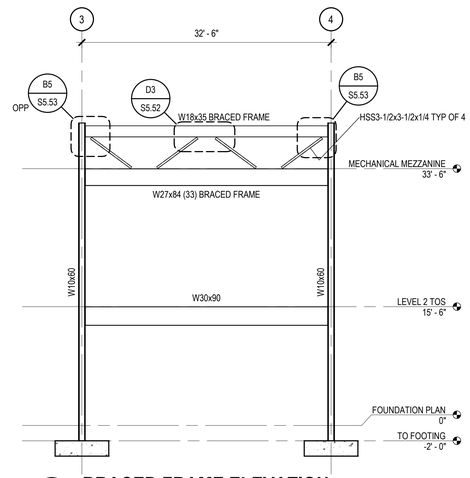

A4 BRACED FRAME ELEVATION
SCALE: 1/8" = 1'-0"

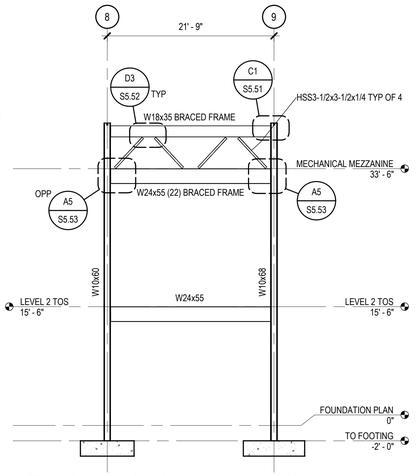

A5 BRACED FRAME ELEVATION
SCALE: 1/8" = 1'-0"

James R. Childers Architect, Inc.
45 South 4th Street
Fort Smith, AR 72901
479-783-2480
www.childersarchitect.com

PROFESSIONAL SEAL:

CONSULTANT LOGO:

Chavez-Grieves
consulting engineers, inc.
4700 Lincoln Road NE, Suite 102 Albuquerque, NM 87109
505-344-4080 505-343-8759 (fax)

CLIENT:

WILMA P. MANKILLER HEALTH CENTER EXPANSION
STILWELL, OKLAHOMA

KEY PLAN:

PROJECT PHASE:
BID PACKAGE 01

REVISIONS		
#	DATE	DESCRIPTION

DATE:	JOB NUMBER:
11-01-19	18-01.01

SHEET NUMBER:
S2.02

MOMENT FRAME AND BRACED FRAME ELEVATIONS

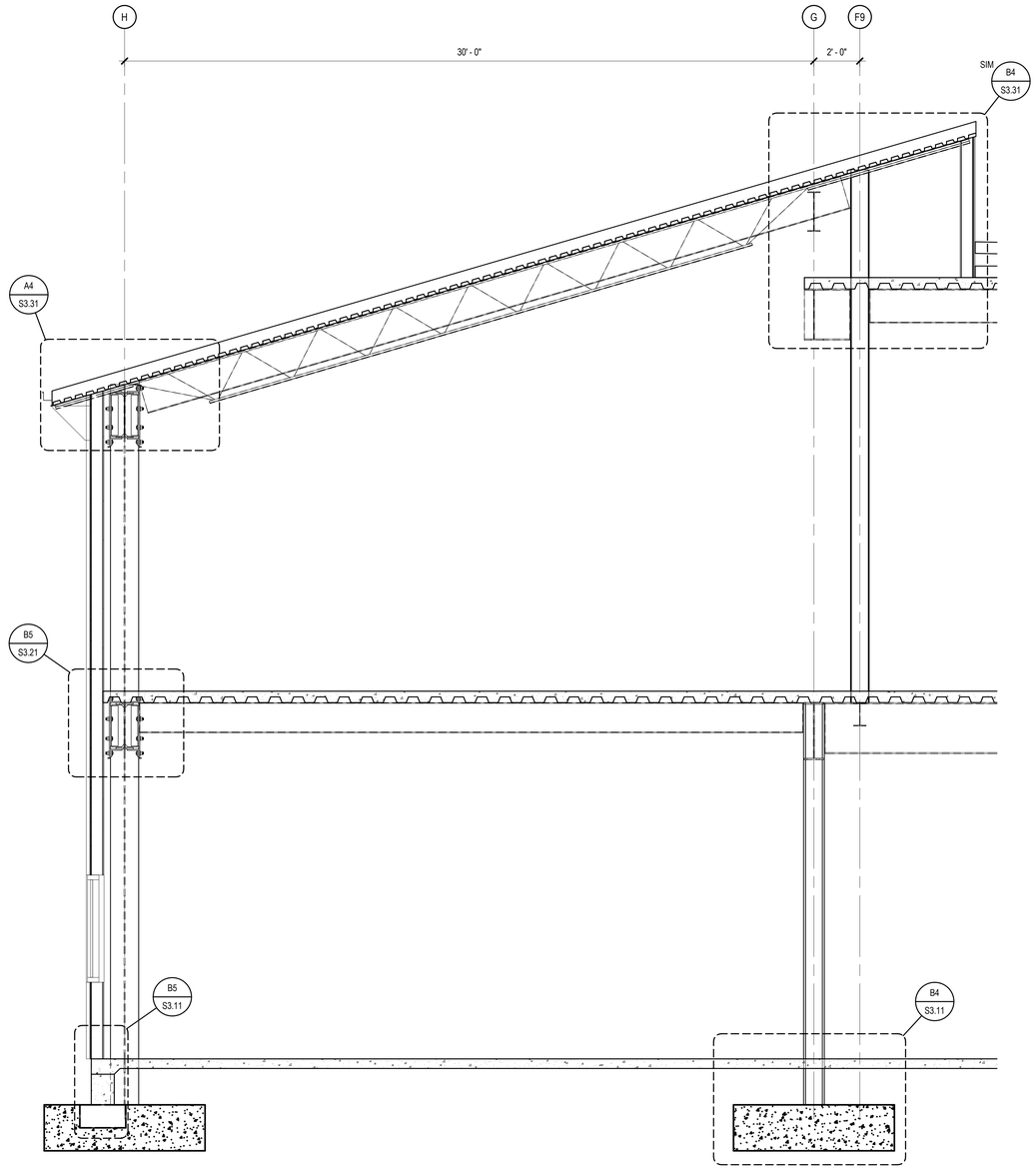

A1 WALL SECTION
SCALE: 3/8" = 1'-0"

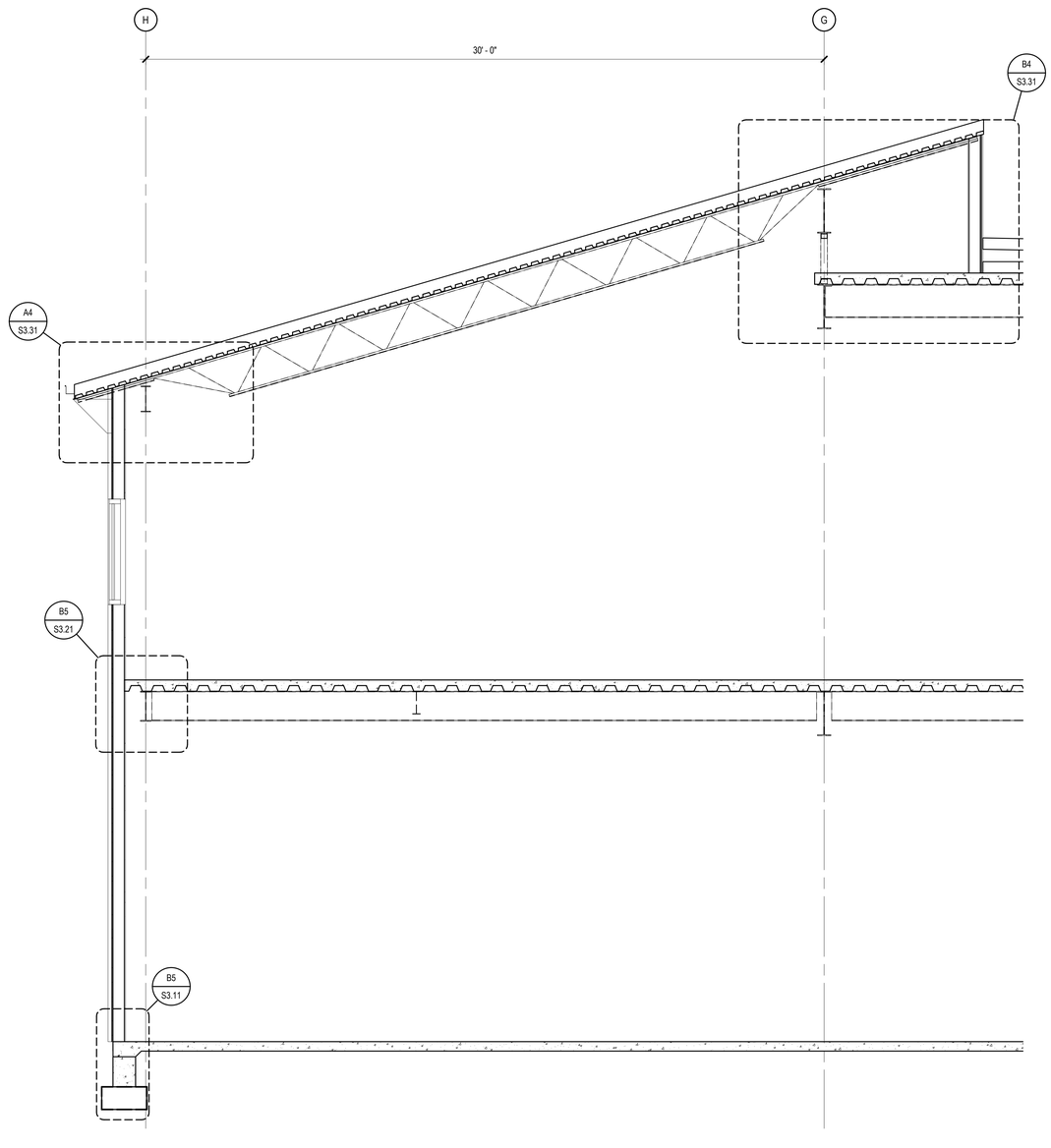

A3 WALL SECTION
SCALE: 3/8" = 1'-0"

James R. Childers
Architect, Inc.
45 South 4th Street
Fort Smith, AR 72901
479-783-2480
www.childersarchitect.com

PROFESSIONAL SEAL:

LICENSED PROFESSIONAL ENGINEER
CHRIS S. ROMERO
23576
OKLAHOMA
11.01.19

CONSULTANT LOGO:

Chavez-Grieves
consulting engineers, inc.
4700 Lincoln Road NE, Suite 102 Albuquerque, NM 87109
505-344-4080 · 505-343-8759 (fax)

CLIENT:

SEAL OF THE CHEROKEE NATION
SEPT. 6, 1839

WILMA P. MANKILLER HEALTH CENTER EXPANSION

STILWELL, OKLAHOMA

KEY PLAN:

PROJECT PHASE:
BID PACKAGE 01

REVISIONS		
#	DATE	DESCRIPTION

DATE:	JOB NUMBER:
11-01-19	18-01.01

SHEET NUMBER:
S3.01

WALL SECTIONS

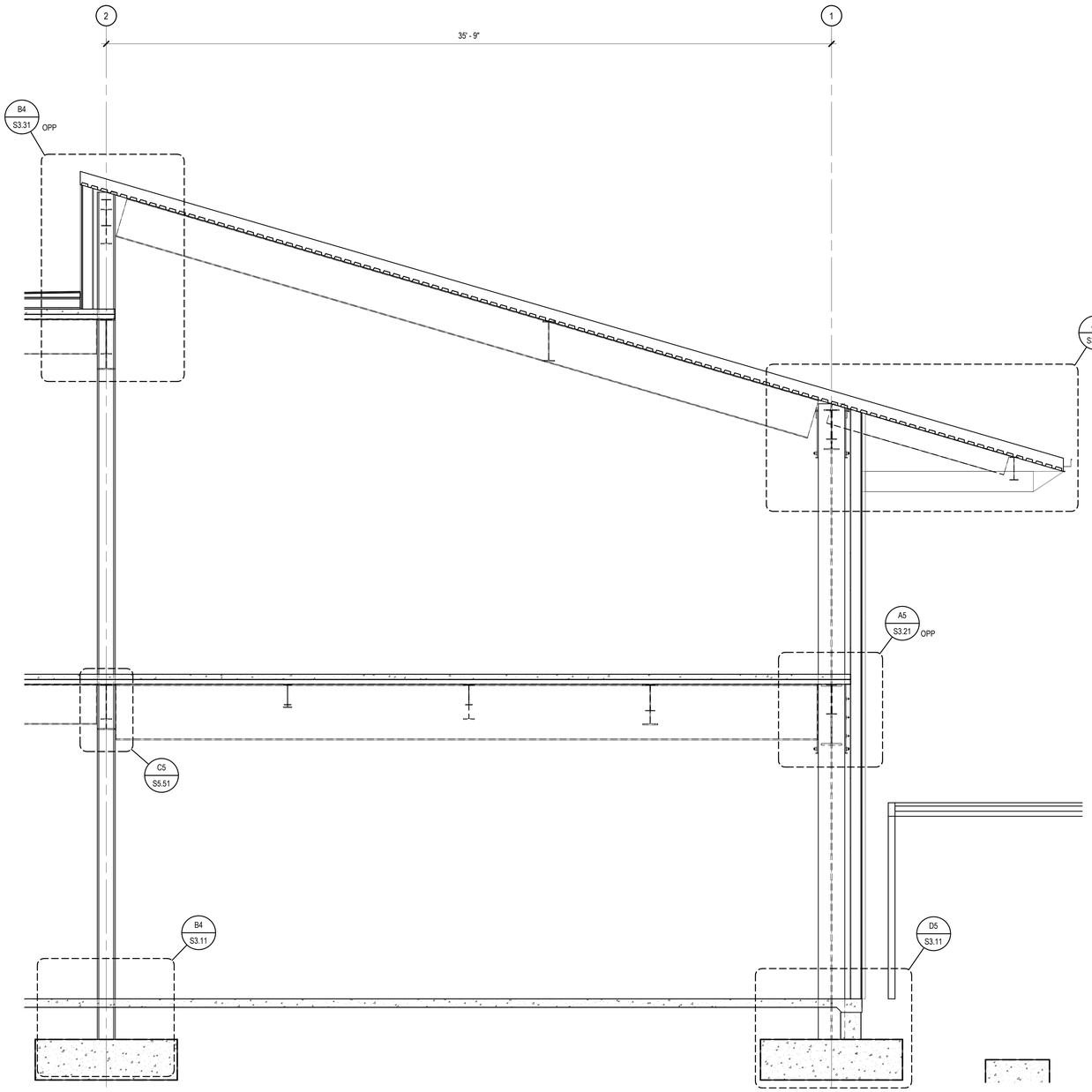

A1 WALL SECTION
SCALE: 3/8" = 1'-0"

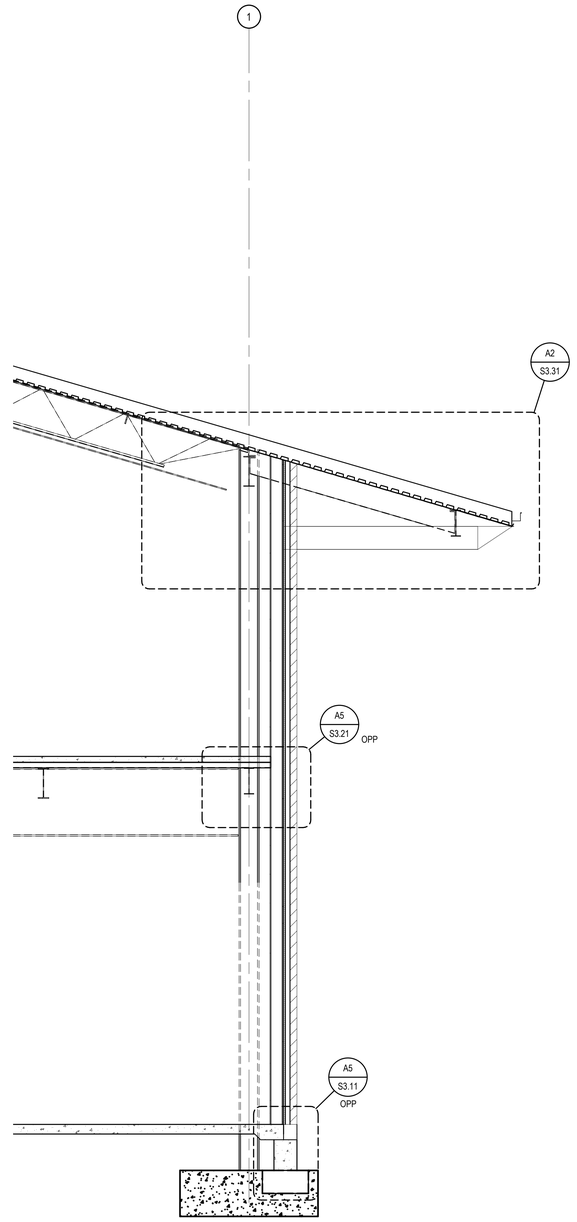

A4 WALL SECTION
SCALE: 3/8" = 1'-0"

James R. Childers
Architect, Inc.
45 South 4th Street
Fort Smith, AR 72901
479-783-2480
www.childersarchitect.com

PROFESSIONAL SEAL:



CONSULTANT LOGO:

Chavez-Grieves
consulting engineers, inc.
4700 Lincoln Road NE, Suite 102 Albuquerque, NM 87109
505-344-4080 505-343-8759 (fax)

CLIENT:



WILMA P. MANKILLER HEALTH CENTER EXPANSION

STILWELL, OKLAHOMA

KEY PLAN:

PROJECT PHASE:
BID PACKAGE 01

REVISIONS		
#	DATE	DESCRIPTION

DATE: 11-01-19
JOB NUMBER: 18-01.01

SHEET NUMBER:
S3.02

WALL SECTIONS

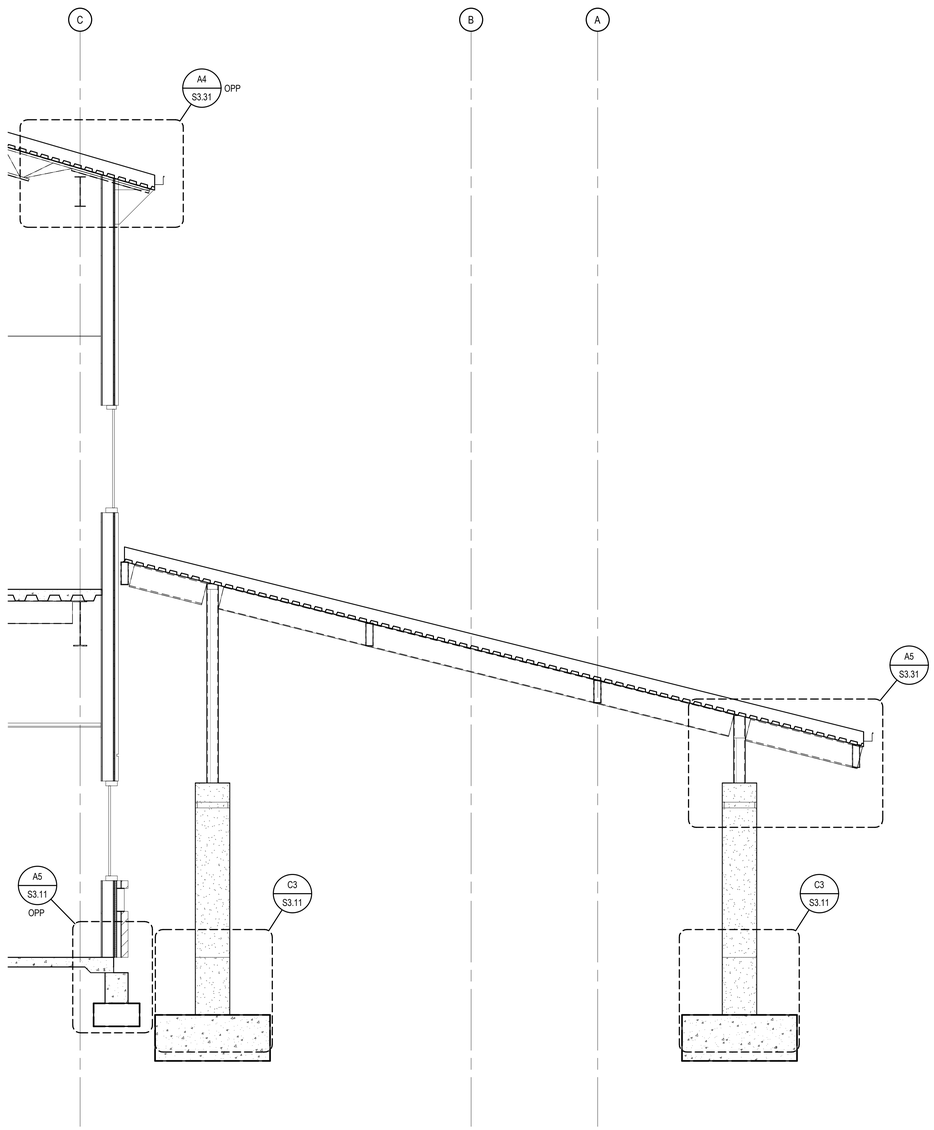

A1 WALL SECTION

SCALE: 3/8" = 1'-0"

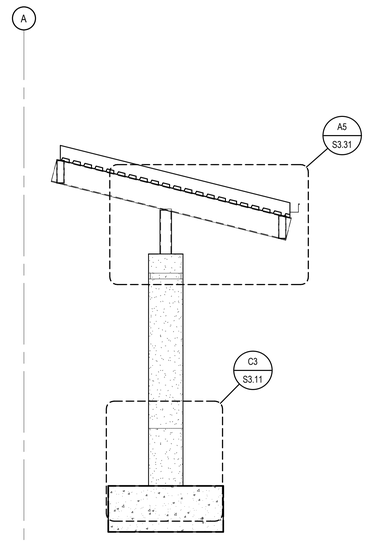

A4 WALL SECTION

SCALE: 3/8" = 1'-0"

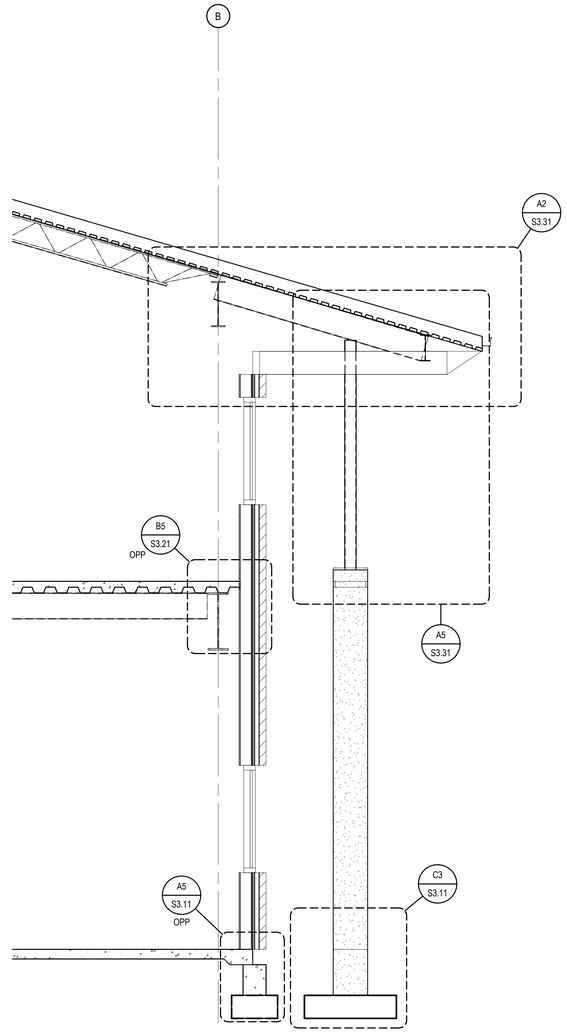

A5 WALL SECTION

SCALE: 3/8" = 1'-0"

James R. Childers Architect, Inc.
45 South 4th Street
Fort Smith, AR 72901
479-783-2480
www.childersarchitect.com

PROFESSIONAL SEAL:

LICENSED PROFESSIONAL ENGINEER
CHRIS S. ROMERO
23576
OKLAHOMA
11.01.19

CONSULTANT LOGO:

Chavez-Grieves
consulting engineers, inc.
4700 Lincoln Road NE, Suite 102 Albuquerque, NM 87109
505-344-4080 505-343-8759 (fax)

CLIENT:

THE CHEROKEE NATION
TRIBE OF INDIANS
SEPT. 6, 1839

WILMA P. MANKILLER HEALTH CENTER EXPANSION

STILWELL, OKLAHOMA

KEY PLAN:

PROJECT PHASE:

BID PACKAGE 01

REVISIONS		
#	DATE	DESCRIPTION

DATE: 11-01-19

JOB NUMBER: 18-01.01

SHEET NUMBER:

S3.03

WALL SECTIONS

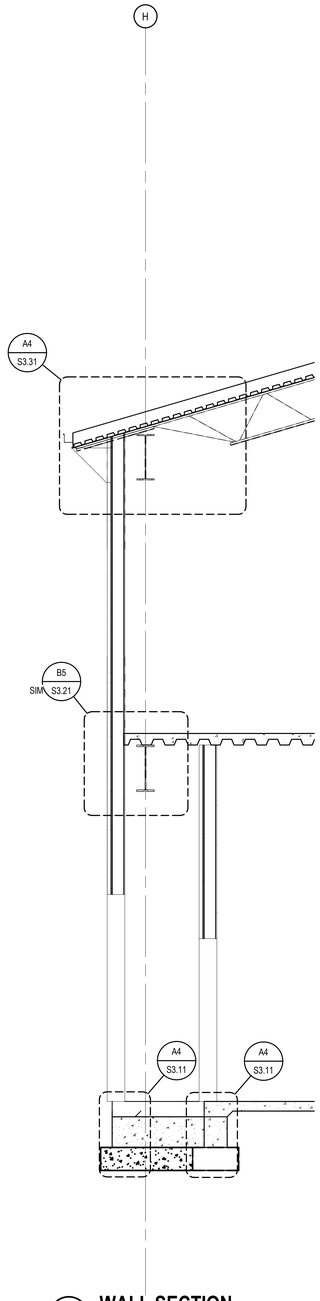

A3 WALL SECTION
SCALE: 3/8" = 1'-0"

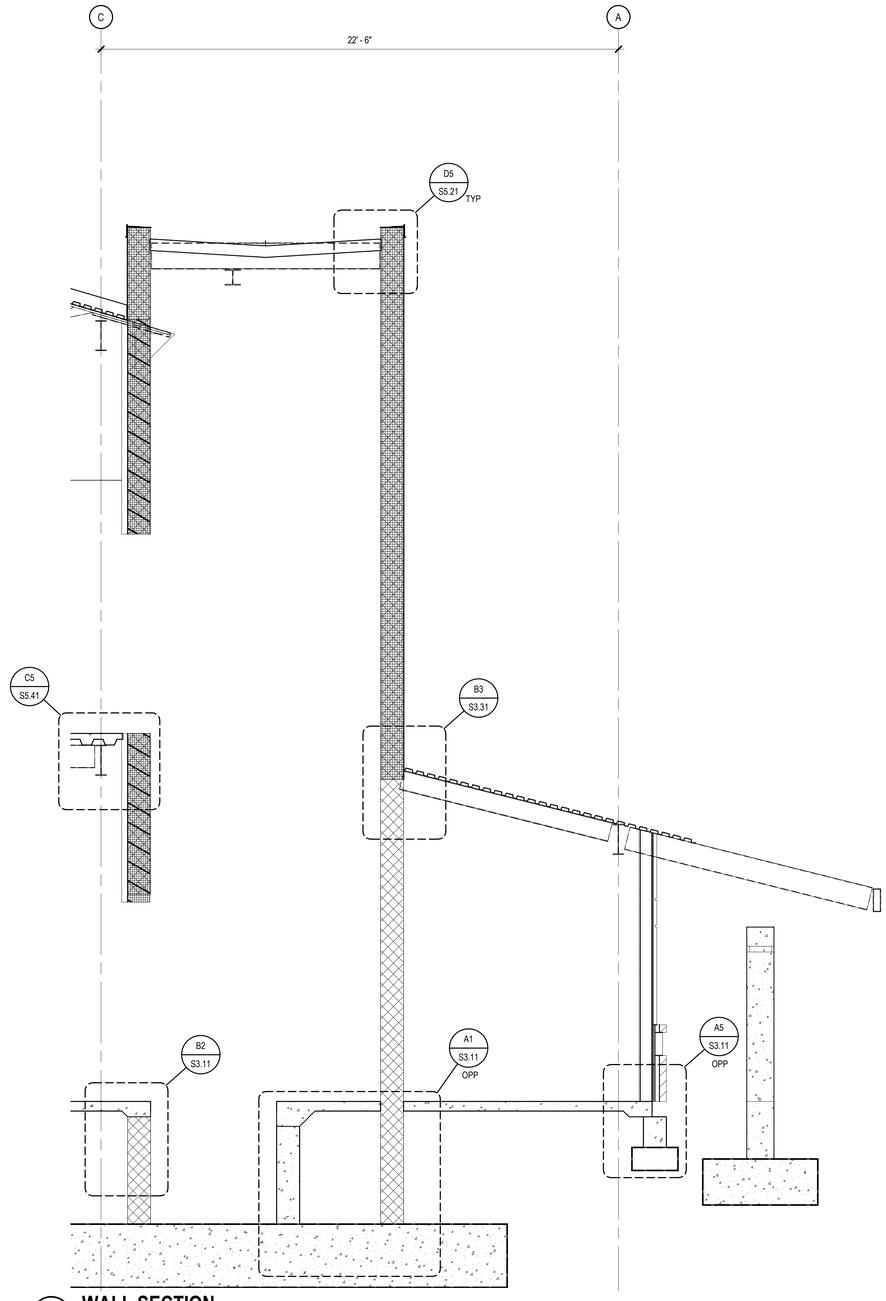

A4 WALL SECTION
SCALE: 3/8" = 1'-0"

James R. Childers
Architect, Inc.
45 South 4th Street
Fort Smith, AR 72901
479-783-2480
www.childersarchitect.com

PROFESSIONAL SEAL:

LICENSED PROFESSIONAL ENGINEER
CHRIS S. ROMERO
23576
OKLAHOMA
11.01.19

CONSULTANT LOGO:

Chavez-Grieves
consulting engineers, inc.
4700 Lincoln Road NE, Suite 102 Albuquerque, NM 87109
505-344-4080 505-343-8759 (fax)

CLIENT:

THE CHEROKEE NATION
SEAL OF
SEPT. 6, 1839
FIRST

WILMA P. MANKILLER HEALTH CENTER EXPANSION

STILWELL, OKLAHOMA

KEY PLAN:

PROJECT PHASE:
BID PACKAGE 01

REVISIONS		
#	DATE	DESCRIPTION

DATE: 11-01-19
JOB NUMBER: 18-01.01

SHEET NUMBER:
S3.04

WALL SECTIONS

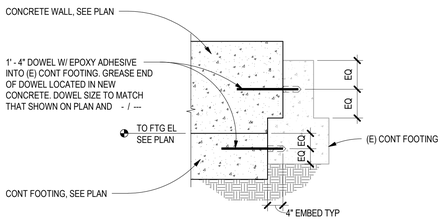

D1 DOWEL INTO (E) CONTINUOUS FOOTING
SCALE: 3/4" = 1'-0"

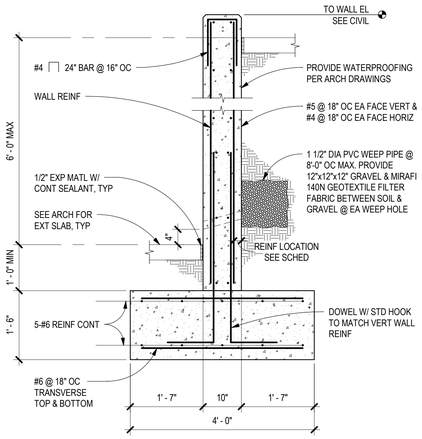

D2 RETAINING WALL SECTION
SCALE: 3/4" = 1'-0"

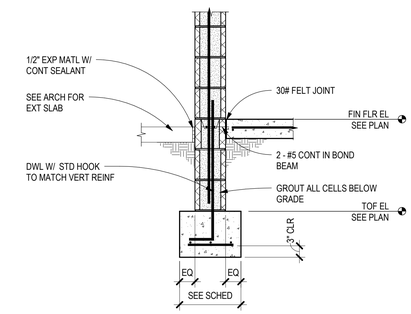

D3 PERIMETER FOUNDATION SECTION
SCALE: 3/4" = 1'-0"

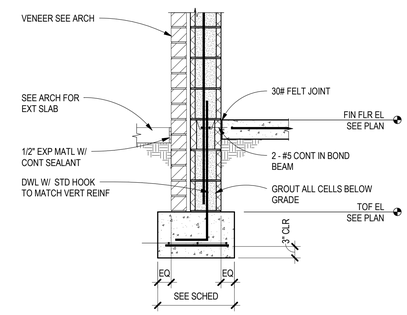

D4 PERIMETER FOUNDATION SECTION
SCALE: 3/4" = 1'-0"

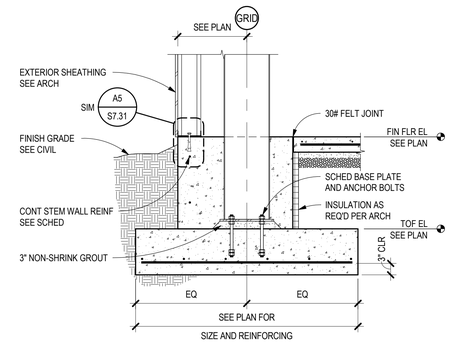

D5 FOUNDATION SECTION
SCALE: 3/4" = 1'-0"

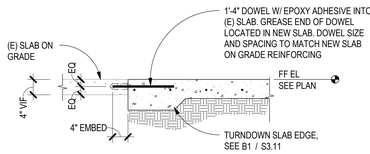

C1 DOWEL INTO (E) SLAB ON GRADE
SCALE: 3/4" = 1'-0"

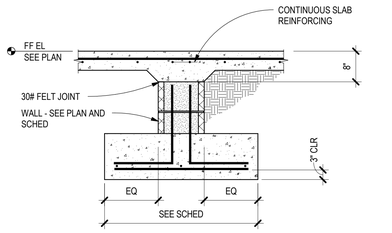

C2 INT SECTION @ DOORWAYS CMU
SCALE: 3/4" = 1'-0"

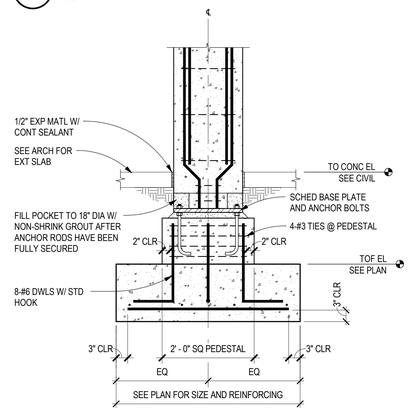

C3 EXT CONC COLUMN SECTION
SCALE: 3/4" = 1'-0"

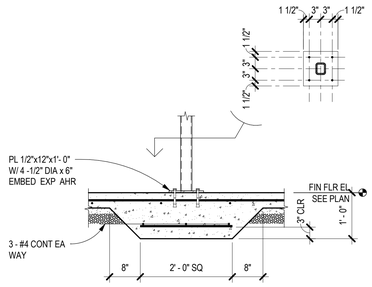

C4 INT COLUMN AT THICKENED SLAB
SCALE: 3/4" = 1'-0"

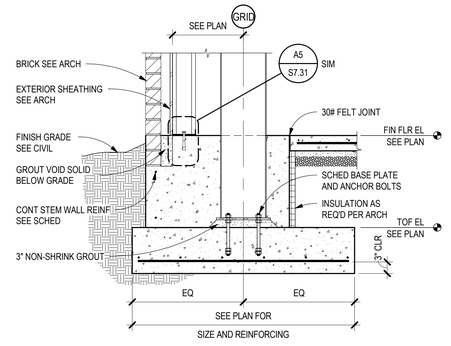

C5 FOUNDATION SECTION
SCALE: 3/4" = 1'-0"

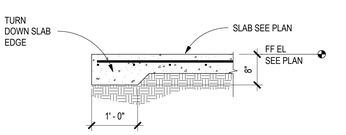

B1 TYP TURN DOWN SLAB EDGE
SCALE: 3/4" = 1'-0"

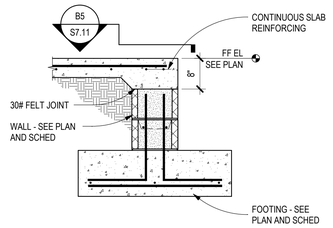

B2 PERIM SECTION AT DOORWAYS CMU
SCALE: 3/4" = 1'-0"

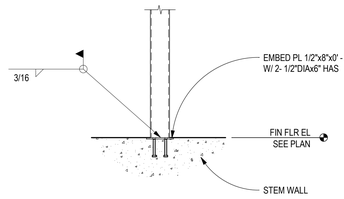

B3 HSS TO STEM WALL SECTION
SCALE: 3/4" = 1'-0"

CAST-IN-PLACE CONCRETE:
ALL CONCRETE SHALL CONFORM TO THE SPECIFICATIONS FOR STRUCTURAL CONCRETE, ACI 301-05.
ALL EXPOSED EDGES OF CONCRETE SHALL HAVE A 3/4" CHAMFER UNLESS NOTED OTHERWISE.
NORMAL WEIGHT CONCRETE: F'C = 4000 PSI @ 28 DAYS

REINFORCING STEEL:
ALL REINFORCING STEEL SHALL BE FABRICATED AND PLACED IN ACCORDANCE WITH THE BUILDING CODE REQUIREMENTS FOR STRUCTURAL CONCRETE (ACI 318-08), AND DETAILS AND DETAILING OF CONCRETE REINFORCEMENT (ACI 315-99).
ALL REINFORCING STEEL SHALL CONFORM TO ASTM A615 GRADE 60; EXCEPT STIRRUPS, TIES AND INDICATED FIELD-BENT BARS, WHICH SHALL CONFORM TO ASTM A615 GRADE 40.
REINFORCING SHALL NOT BE TACK WELDED OR WELDED IN ANY MANNER UNLESS SPECIFICALLY DETAILED ON THE STRUCTURAL PLANS.

STRUCTURAL AND MISCELLANEOUS STEEL
ANCHOR BOLTS EMBEDDED IN CONCRETE SHALL BE ASTM F1554 GRADE 36 THREADED RODS WITH DOUBLE NUTS. PROVIDE FLAT WASHERS BETWEEN NUTS AND BASEPLATE SURFACES. ANCHOR BOLT LENGTHS SHOWN FOR ATTACHMENT TO CONCRETE ARE REQUIRED EMBEDMENT LENGTHS. THE CONTRACTOR SHALL PROVIDE ANCHOR BOLTS WITH ADDITIONAL BOLT LENGTH TO FACILITATE THE REQUIRED CONNECTION.
ANCHOR BOLT FLAT WASHERS SHALL BE PROVIDED IN ACCORDANCE WITH TABLE 14-2 OF AISC 390, AISC MANUAL OF STEEL CONSTRUCTION THIRTEEN EDITION.

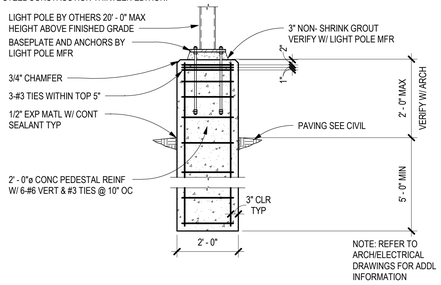

A3 LIGHT POLE BASE
SCALE: 1/2" = 1'-0"

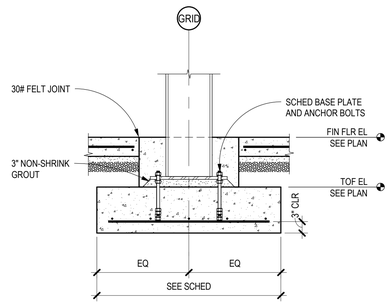

B4 INTERIOR COLUMN SECTION
SCALE: 3/4" = 1'-0"

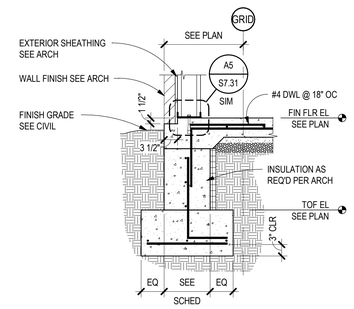

B5 FOUNDATION SECTION NO VENEER
SCALE: 3/4" = 1'-0"

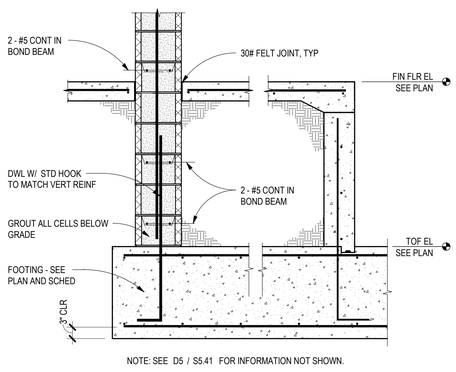

A1 FOUNDATION SECTION @ ELEVATOR
SCALE: 3/4" = 1'-0"

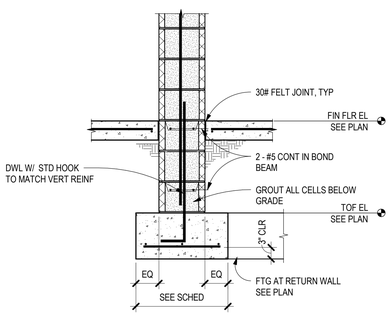

A2 PERIMETER FOUNDATION SECTION
SCALE: 3/4" = 1'-0"

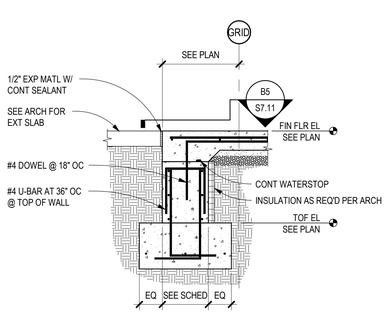

A4 FOUNDATION SECTION AT DOORWAY
SCALE: 3/4" = 1'-0"

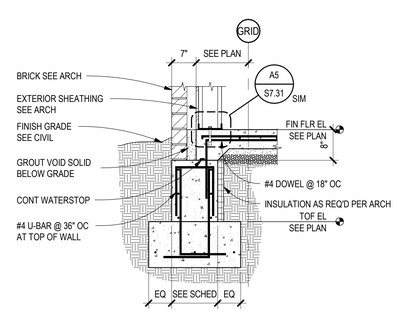

A5 TYPICAL FOUNDATION SECTION
SCALE: 3/4" = 1'-0"

James R. Childers Architect, Inc.
45 South 4th Street
Fort Smith, AR 72901
479-783-2480
www.childersarchitect.com

PROFESSIONAL SEAL:
CHRIS S. ROMERO 23576 REGISTERED PROFESSIONAL ENGINEER
11.01.19

CONSULTANT LOGO:
Chavez-Grieves consulting engineers, inc.
4700 Lincoln Road NE, Suite 102 Albuquerque, NM 87109
505-344-4080 505-343-8759 (fax)

CLIENT:
THE CHEROKEE NATION 1839 SEAL OF SEPT. 6, 1839

WILMA P. MANKILLER HEALTH CENTER EXPANSION
STILWELL, OKLAHOMA

KEY PLAN:

PROJECT PHASE:
BID PACKAGE 01

REVISIONS		
#	DATE	DESCRIPTION

DATE: 11-01-19
JOB NUMBER: 18-01.01
SHEET NUMBER: S3.11

FOUNDATION SECTIONS

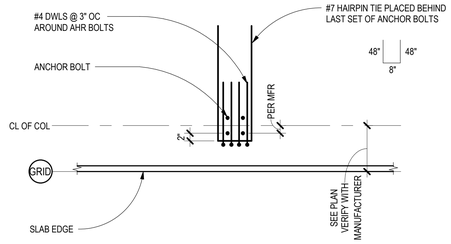

D5 HAIRPIN REINF AT COLUMN

SCALE: 3/4" = 1'-0"

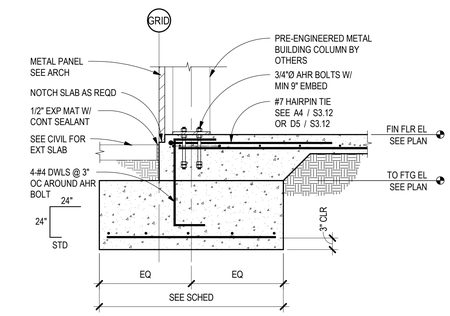

C5 PERIMETER SECTION @ COLUMN

SCALE: 3/4" = 1'-0"

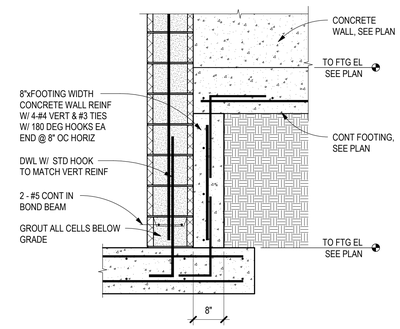

B4 FOUNDATION SECTION @ ELEVATOR

SCALE: 3/4" = 1'-0"

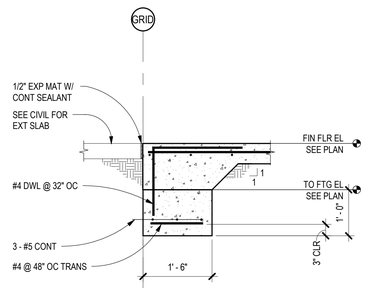

B5 FOUNDATION SECT @ OPENING

SCALE: 3/4" = 1'-0"

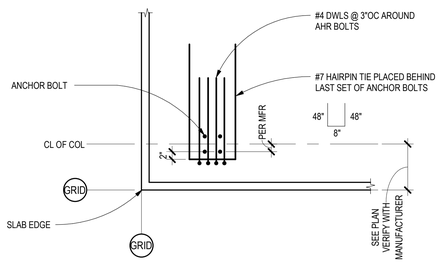

A4 HAIRPIN REINF AT CORNER COLUMN

SCALE: 3/4" = 1'-0"

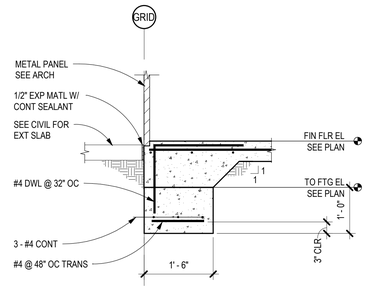

A5 PERIMETER FOUNDATION SECTION

SCALE: 3/4" = 1'-0"

James R. Childers
Architect, Inc.
45 South 4th Street
Fort Smith, AR 72901
479-783-2480
www.childersarchitect.com

PROFESSIONAL SEAL:

CONSULTANT LOGO:

Chavez-Grieves
consulting engineers, inc.
4700 Lincoln Road NE, Suite 102 Albuquerque, NM 87109
505-344-4080 505-343-8759 (fax)

CLIENT:

THE CHEROKEE NATION
SEPT. 6, 1839

WILMA P. MANKILLER HEALTH CENTER EXPANSION

STILWELL, OKLAHOMA

KEY PLAN:

PROJECT PHASE:

BID PACKAGE 01

REVISIONS		
#	DATE	DESCRIPTION

DATE: 11-01-19

JOB NUMBER: 18-01.01

SHEET NUMBER:

S3.12

FOUNDATION SECTIONS

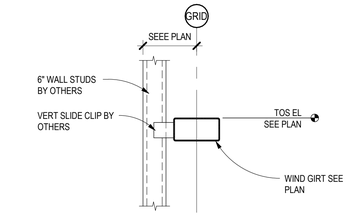

D5 FRAMING SECTION
SCALE: 3/4" = 1'-0"

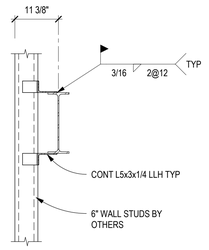

C5 FRAMING SECTION
SCALE: 3/4" = 1'-0"

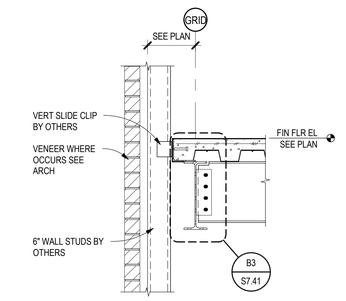

B5 FLOOR FRAMING SECTION
SCALE: 3/4" = 1'-0"

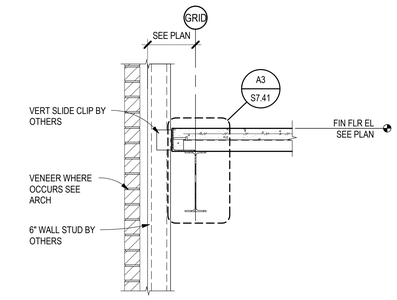

A5 FLOOR FRAMING SECTION
SCALE: 3/4" = 1'-0"

James R. Childers Architect, Inc.
45 South 4th Street
Fort Smith, AR 72901
479-783-2480
www.childersarchitect.com

PROFESSIONAL SEAL:

ARKANSAS LICENSED PROFESSIONAL ENGINEER
CHRIS S. ROMERO
23576
11.01.19

CONSULTANT LOGO:

Chavez-Grieves
consulting engineers, inc.
4700 Lincoln Road NE, Suite 102 Albuquerque, NM 87109
505-344-4080 505-343-8759 (fax)

CLIENT:

THE CHEROKEE NATION
TRIBAL SEAL
SEPT. 6, 1839

WILMA P. MANKILLER HEALTH CENTER EXPANSION
STILWELL, OKLAHOMA

KEY PLAN:

PROJECT PHASE:
BID PACKAGE 01

REVISIONS		
#	DATE	DESCRIPTION

DATE: 11-01-19
JOB NUMBER: 18-01.01
SHEET NUMBER: S3.21

FLOOR FRAMING SECTIONS

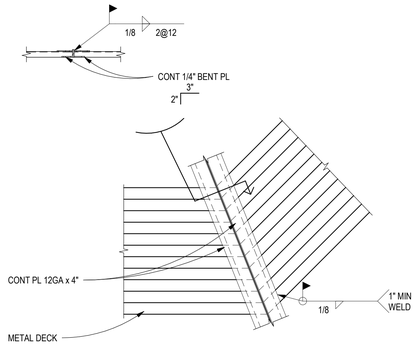

D2 ROOF DECK TRANSITION
SCALE: 3/4" = 1'-0"

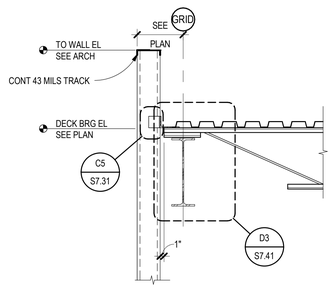

D3 ROOF FRAMING SECTION
SCALE: 3/4" = 1'-0"

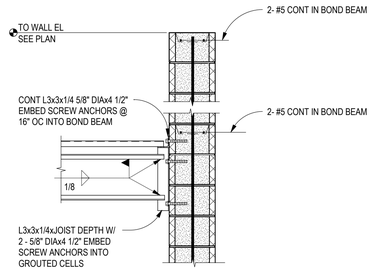

NOTE: SEE A4 / S7.21 FOR BOND BEAM REINFORCEMENT DETAIL.

D4 ROOF NON-BEARING AT CMU WALL
SCALE: 3/4" = 1'-0"

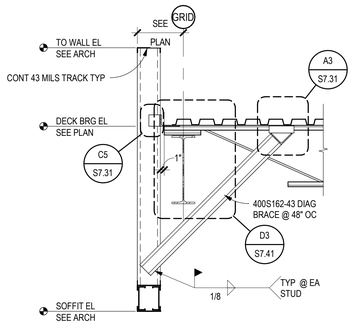

C2 ROOF FRAMING SECTION
SCALE: 3/4" = 1'-0"

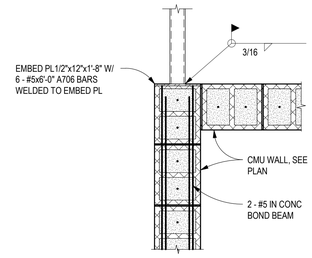

PLAN VIEW

C3 COLLECTOR BLOCKING
SCALE: 3/4" = 1'-0"

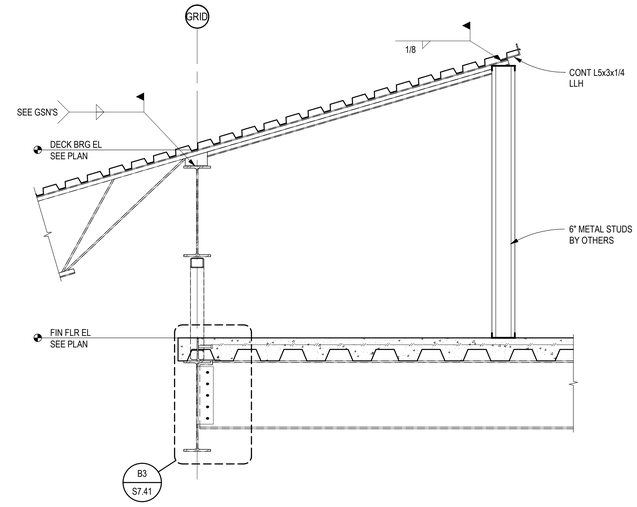

B4 ROOF FRAMING SECTION
SCALE: 3/4" = 1'-0"

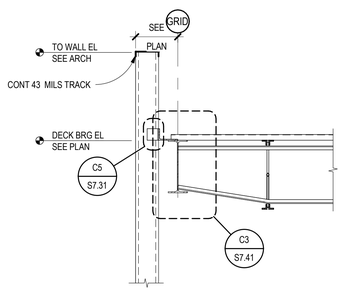

B2 ROOF FRAMING SECTION
SCALE: 3/4" = 1'-0"

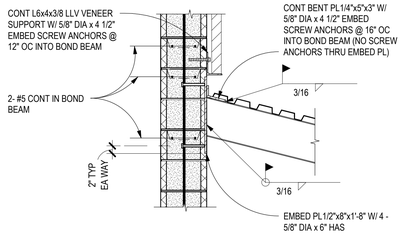

NOTE: SEE A4 / S7.21 FOR BOND BEAM REINFORCEMENT DETAIL.

B3 FRAMING SECTION
SCALE: 3/4" = 1'-0"

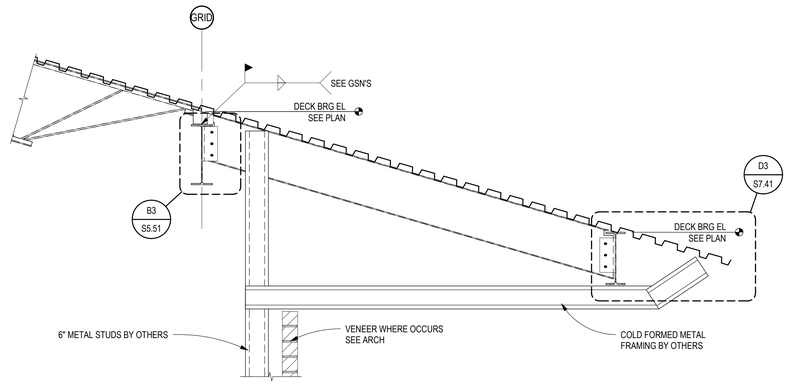

A2 ROOF FRAMING SECTION
SCALE: 3/4" = 1'-0"

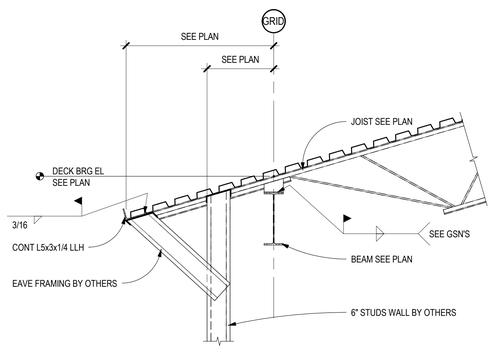

A4 TYPICAL ROOF FRAMING SECTION
SCALE: 3/4" = 1'-0"

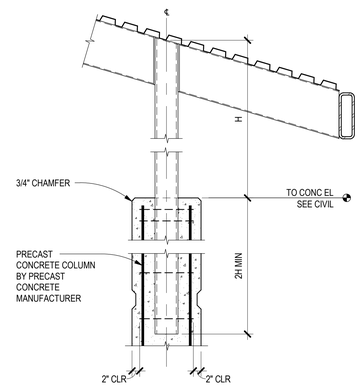

A5 EXT CONC COLUMN SECTION
SCALE: 3/4" = 1'-0"

James R. Childers Architect, Inc.
45 South 4th Street
Fort Smith, AR 72901
479-783-2480
www.childersarchitect.com

PROFESSIONAL SEAL:

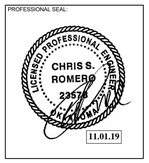

CONSULTANT LOGO:

Chavez-Grieves
consulting engineers, inc.
4700 Lincoln Road NE, Suite 102 Albuquerque, NM 87109
505-344-4080 · 505-343-8759 (fax)

CLIENT:

THE CHEROKEE NATION
TRIBAL JURISDICTIONAL TERRITORY
SEPT. 6, 1839

WILMA P. MANKILLER HEALTH CENTER EXPANSION
STILWELL, OKLAHOMA

KEY PLAN:

PROJECT PHASE:
BID PACKAGE 01

REVISIONS:		
#	DATE	DESCRIPTION

DATE:	JOB NUMBER:
11-01-19	18-01.01

SHEET NUMBER:
S3.31

ROOF FRAMING SECTIONS

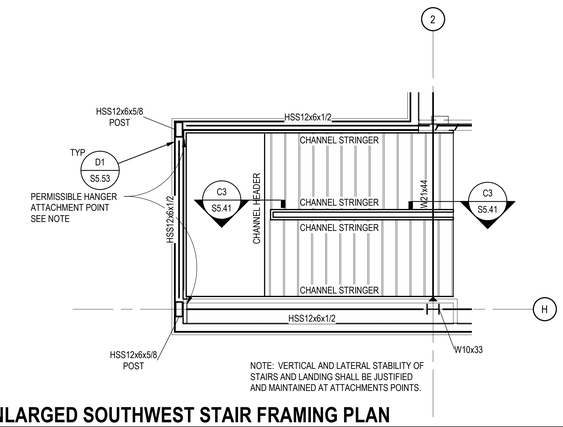

NOTE: VERTICAL AND LATERAL STABILITY OF STAIRS AND LANDING SHALL BE JUSTIFIED AND MAINTAINED AT ATTACHMENTS POINTS.

D1 ENLARGED SOUTHWEST STAIR FRAMING PLAN

SCALE: 1/4" = 1'-0"

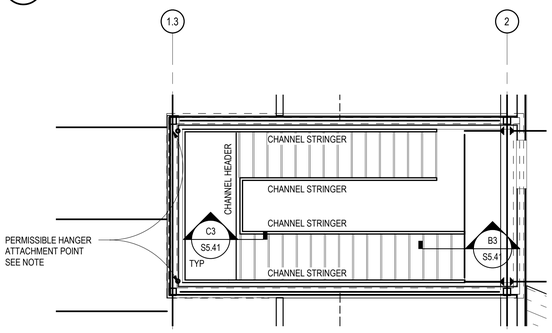

NOTE: VERTICAL AND LATERAL STABILITY OF STAIRS AND LANDING SHALL BE JUSTIFIED AND MAINTAINED AT ATTACHMENTS POINTS.

C1 ENLARGED WEST STAIR FRAMING PLAN TO MEZZANINE

SCALE: 1/4" = 1'-0"

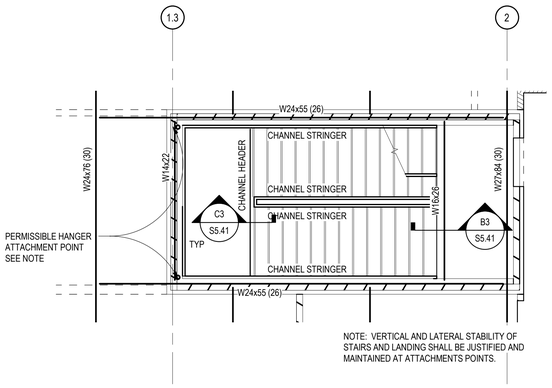

NOTE: VERTICAL AND LATERAL STABILITY OF STAIRS AND LANDING SHALL BE JUSTIFIED AND MAINTAINED AT ATTACHMENTS POINTS.

B1 ENLARGED WEST STAIR FRAMING PLAN

SCALE: 1/4" = 1'-0"

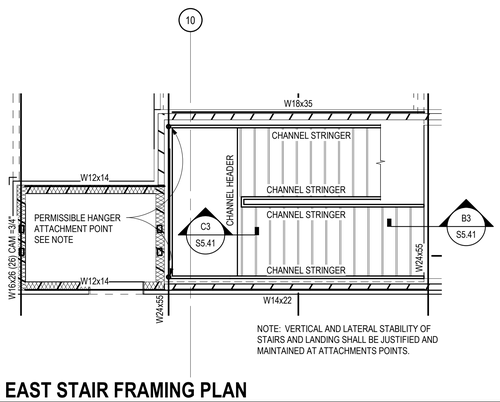

NOTE: VERTICAL AND LATERAL STABILITY OF STAIRS AND LANDING SHALL BE JUSTIFIED AND MAINTAINED AT ATTACHMENTS POINTS.

A1 ENLARGED EAST STAIR FRAMING PLAN

SCALE: 1/4" = 1'-0"

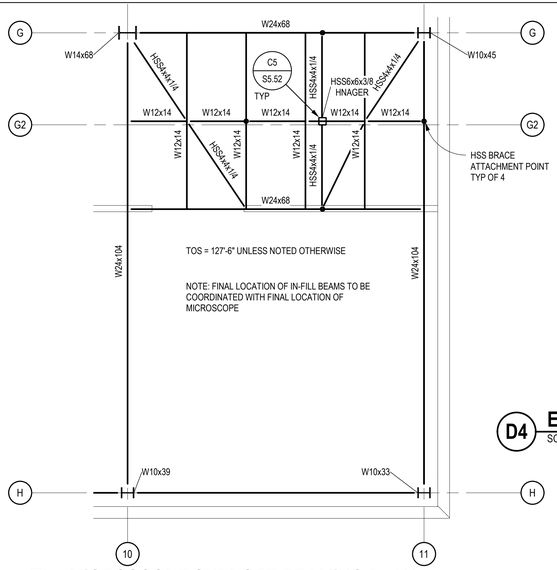

D2 MICROSCOPE SUPPORT FRAMING PLAN

SCALE: 1/4" = 1'-0"

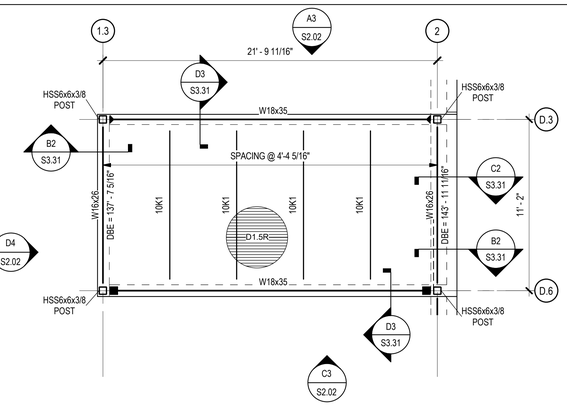

D4 ENLARGED PLAN - WEST ROOF POP-UP

SCALE: 1/4" = 1'-0"

NOTE: STONE COLUMN GROUND IMPROVEMENTS IS NOT REQUIRED FOR PRE-ENGINEERED METAL BUILDING FOUNDATIONS.

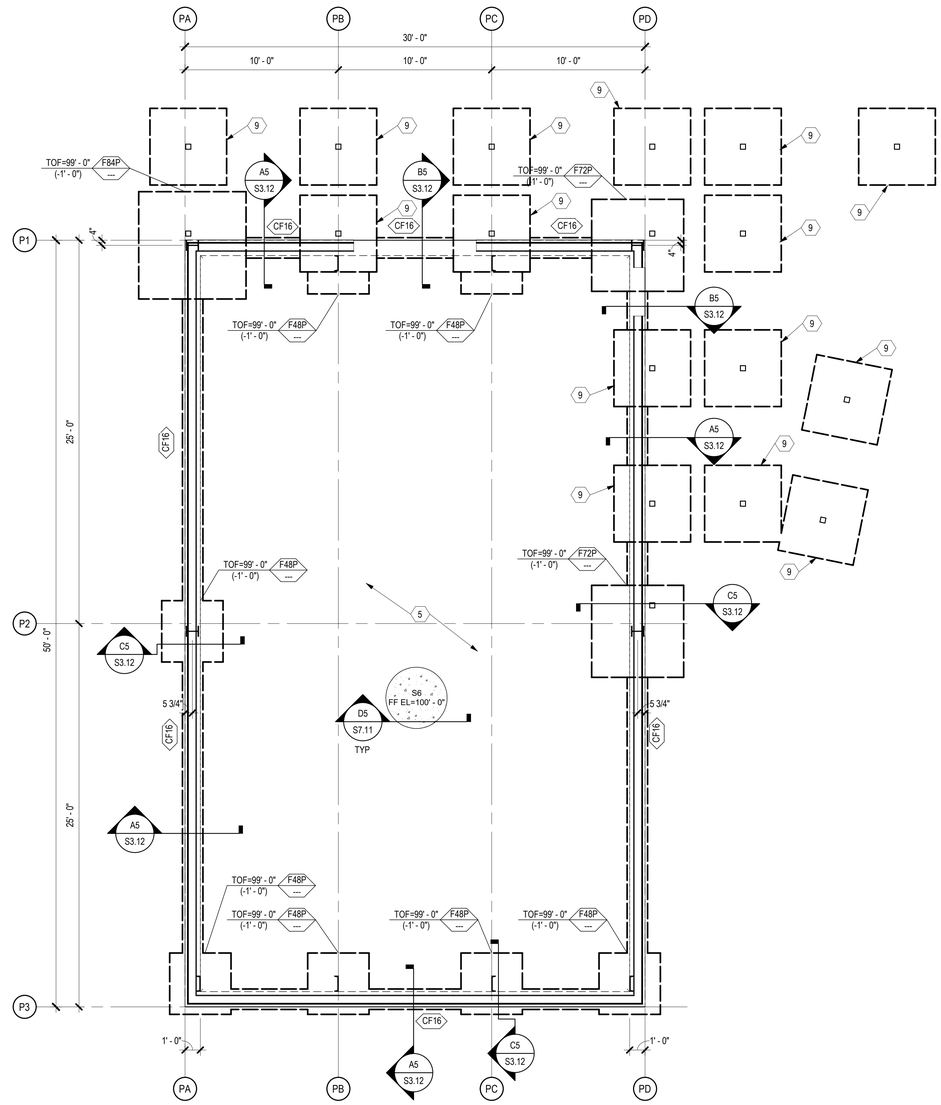

A3 ENLARGED PLAN - PEMB FOUNDATION

SCALE: 1/4" = 1'-0"

GENERAL SHEET NOTES

1. SOME SHEET KEYNOTES MAY NOT APPLY TO THIS SHEET.
2. REFERENCE FINISH FLOOR ELEVATION 100'-0" = MEAN SEA FINISH FLOOR ELEVATION. SEE CIVIL DRAWINGS.
3. TOP OF FOOTING ELEVATION = 98' - 0" (-2' - 0"), UNLESS NOTED OTHERWISE ON PLAN.
4. NOTE TO CONTRACTOR: ENLARGED SLAB BLOCKOUTS MAY BE REQUIRED AT FRAME COLUMNS FOR MOMENT FRAME BASE PLATE CLEARANCE.
5. NOTE TO ERECTOR: LATERAL STABILITY OF THE STEEL FRAME IS DEPENDENT UPON THE MOMENT FRAMES. THE ERECTOR SHALL PROVIDE TEMPORARY BRACING OF THE STEEL FRAME IN ACCORDANCE WITH SECTION 7.10 OF THE AISC CODE OF STANDARD PRACTICES.
6. DIMENSIONS ARE TO THE FACE OF STUD UNLESS NOTED OTHERWISE.
7. SEE ARCHITECTURAL DRAWINGS FOR MASONRY DIMENSIONS NOT SHOWN.
8. EXISTING CONSTRUCTION IS PER AVAILABLE EXISTING DRAWINGS. ALL EXISTING CONSTRUCTION AND DIMENSIONS SHALL BE VERIFIED PRIOR TO CONSTRUCTION. SHOULD CONDITIONS VARY FROM THOSE SHOWN, CONTACT ENGINEER BEFORE PROCEEDING.
9. PROVIDE SLAB JOINTS AT 10'-0" ON CENTER MAXIMUM. THE AREA OF THE CONTROL JOINT SHALL NOT EXCEED A 2:1 RATIO. CONTROL JOINTS SHALL BE LOCATED AT COLUMN LINES WHERE THE LAYOUT PERMITS. AT RE-ENTRANT CORNERS THAT DO NOT HAVE CONTROL JOINTS, PROVIDE 2-#4 x 3'-0" DIAGONAL TO THE RE-ENTRANT CORNER.
10. STRUCTURAL COLD FORMED METAL STUDS SHALL BE 6" WIDE UNLESS NOTED OTHERWISE. STUD THICKNESS AND SPACING BY OTHERS.
11. SEE SHEET S7.00 SERIES SHEETS FOR TYPICAL FOUNDATION SECTIONS AND DETAILS.
12. SEE SHEET S6.01 FOR SCHEDULES.

SHEET KEYNOTE

1. FLOOR DRAIN. SLOPE SLAB TO DRAIN 1/8" PER FOOT. COORDINATE EXACT SIZE AND LOCATION WITH ARCHITECTURAL AND MECHANICAL DRAWINGS.
2. POST AND FOUNDATION AS REQUIRED FOR STAIR SUPPORT. STAIR ENGINEER TO PROVIDE REQUIRED LOADS AND LOCATIONS.
3. ELEVATOR SUMP PIT. COORDINATE EXACT SIZE AND LOCATION WITH ELEVATOR MANUFACTURER. SEE A4 / S5.41
4. HSS6x4x1/2 ELEVATOR RAIL SUPPORT POST. COORDINATE LOCATION AND SPACING WITH ELEVATOR MANUFACTURER. SEE B4 / S5.41
5. PRE-ENGINEERED METAL BUILDING STEEL AND ANCHORAGE BY OTHERS. CONTRACTOR TO CONFIRM LOCATIONS OF FOUNDATIONS WITH FINAL PRE-ENGINEERED METAL BUILDING SHOP DRAWINGS.
6. NOTCH MASONRY AS REQUIRED TO FACILITATE BASEPLATE INSTALLATION. STEP BOND BEAM AT THIS LOCATION..
7. CUT AND REMOVE EXISTING SLAB AS REQUIRED TO PLACE NEW FOOTING. NEW SLAB TO POUR UP TO REMAINING SLAB.
8. CENTER FOOTING ON GRID C.
9. F60A PRE-MANUFACTURED SUNSHADE CONCRETE FOOTING. TOP OF FOOTING = 99' - 0" (-1' - 0"). SEE SHEET S6.01 FOR FOOTING SCHEDULE. COORDINATE FINAL LOCATION WITH SUNSHADE MANUFACTURER.
10. EXISTING CANOPY. SEE ARCHITECTURAL DEMOLITION PLANS FOR EXTENT OF DEMOLITION.
11. HSS8x6x1/2 ELEVATOR SUPPORT POST. COORDINATE EXACT LOCATION AND SPACING WITH ELEVATOR MANUFACTURER. SEE B4 / S5.41, D3 / S5.41, A2 / S5.41, B2 / S5.41, AND C2 / S5.41
12. 1 1/2" RECESSED SLAB AT ADA SHOWER. COORDINATE EXACT SIZE, LOCATION, AND SLOPE REQUIREMENTS WITH ARCHITECTURAL DRAWINGS. SEE C4 / S7.11
13. 18" DIAMETER PRECAST CONCRETE COLUMN BY OTHERS.
14. 18" DIAMETER PRECAST CONCRETE CANOPY COLUMN BY OTHERS.

James R. Childers Architect, Inc.
45 South 4th Street
Fort Smith, AR 72901
479-783-2480
www.childersarchitect.com

PROFESSIONAL SEAL:

CONSULTANT LOGO:

Chavez-Grieves consulting engineers, inc.
4700 Lincoln Road NE, Suite 102 Albuquerque, NM 87109
505-344-4080 505-343-8759 (fax)

CLIENT:

WILMA P. MANKILLER HEALTH CENTER EXPANSION

STILWELL, OKLAHOMA

KEY PLAN:

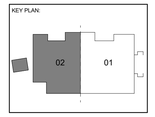

PROJECT PHASE:

BID PACKAGE 01

REVISIONS		
#	DATE	DESCRIPTION

DATE:	JOB NUMBER:
11-01-19	18-01.01

SHEET NUMBER:

S4.01

ENLARGED PLANS

NOTE: ATTACH DECK TO SUPPORT ANGLE PER NOTE ON PLAN

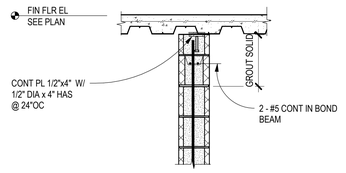

D3 CMU BEARING WALL TO DECK
SCALE: 3/4" = 1'-0"

NOTE: ATTACH DECK TO SUPPORT ANGLE PER NOTE ON PLAN

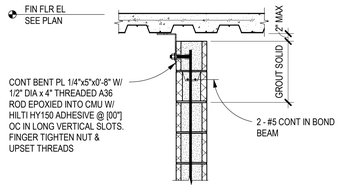

D4 CMU NON-BRG WALL TO DECK
SCALE: 3/4" = 1'-0"

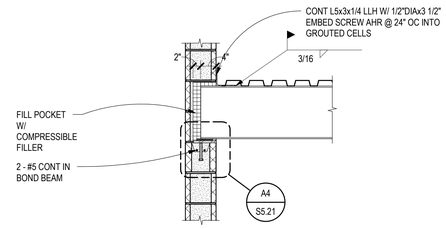

D5 TYPICAL BEAM TO WALL SLIDE BRG
SCALE: 3/4" = 1'-0"

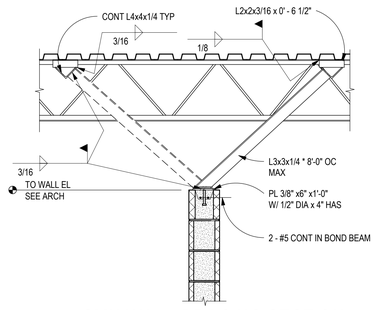

C3 CMU WALL BRACING SECTION
SCALE: 3/4" = 1'-0"

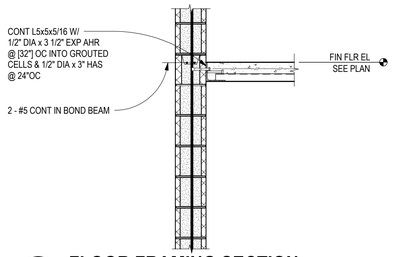

C4 FLOOR FRAMING SECTION
SCALE: 3/4" = 1'-0"

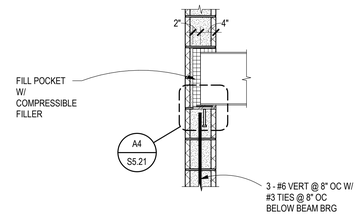

C5 TYPICAL GIRDER TO WALL SLIDE BRG
SCALE: 3/4" = 1'-0"

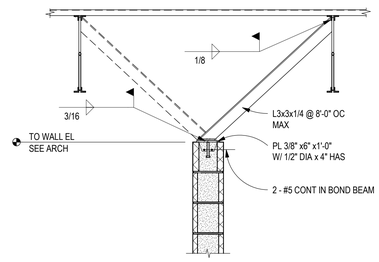

B3 CMU WALL BRACING SECTION
SCALE: 3/4" = 1'-0"

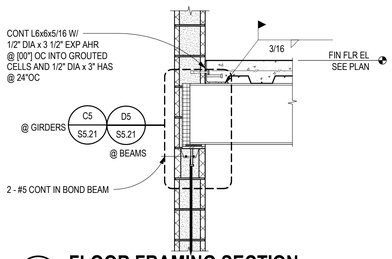

B4 FLOOR FRAMING SECTION
SCALE: 3/4" = 1'-0"

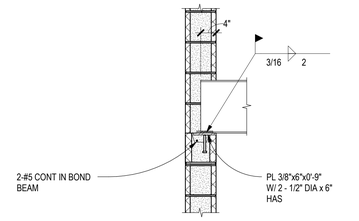

B5 TYPICAL BEAM TO CMU WALL
SCALE: 3/4" = 1'-0"

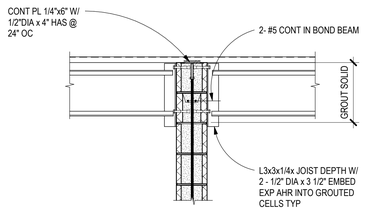

A2 INT CMU BEARING WALL TO DECK
SCALE: 3/4" = 1'-0"

NOTE: ATTACH DECK TO SUPPORT ANGLE PER NOTE ON PLAN

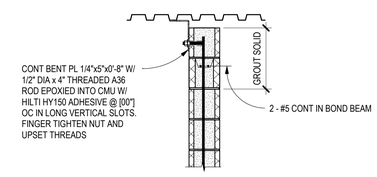

A3 CMU NON-BRG WALL TO DECK
SCALE: 3/4" = 1'-0"

NOTE: INSTALL PLATES TEFLON TO TEFLON

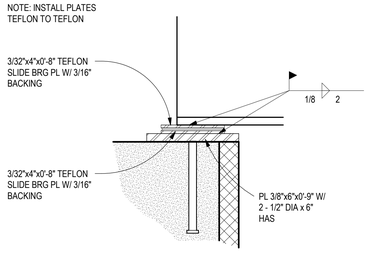

A4 TYPICAL SLIDE BRG CONN
SCALE: 1 1/2" = 1'-0"

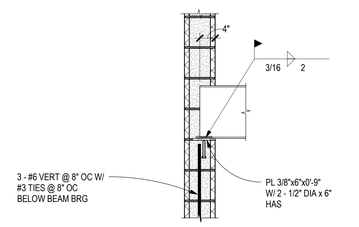

A5 TYPICAL GIRDER TO WALL SLIDE BRG
SCALE: 3/4" = 1'-0"

James R. Childers Architect, Inc.
45 South 4th Street
Fort Smith, AR 72901
479-783-2480
www.childersarchitect.com

PROFESSIONAL SEAL:

LICENSED PROFESSIONAL ENGINEER
CHRIS S. ROMERO
23576
OKLAHOMA
11.01.19

CONSULTANT LOGO:

Chavez-Grieves
consulting engineers, inc.
4700 Lincoln Road NE, Suite 102 Albuquerque, NM 87109
505-344-4080 · 505-343-8759 (fax)

CLIENT:

THE CHEROKEE NATION
TRIBE OF INDIANS
SEPT. 6, 1839

WILMA P. MANKILLER HEALTH CENTER EXPANSION
STILWELL, OKLAHOMA

KEY PLAN:

PROJECT PHASE:
BID PACKAGE 01

REVISIONS		
#	DATE	DESCRIPTION

DATE:	JOB NUMBER:
11-01-19	18-01.01

SHEET NUMBER:
S5.21

MASONRY FRAMING SECTIONS AND DETAILS

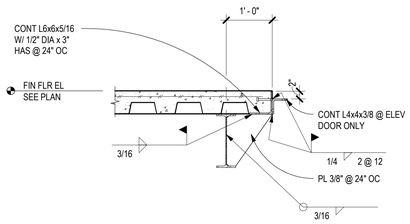

D2 ELEVATOR OPENING SECTION
SCALE: 3/4" = 1'-0"

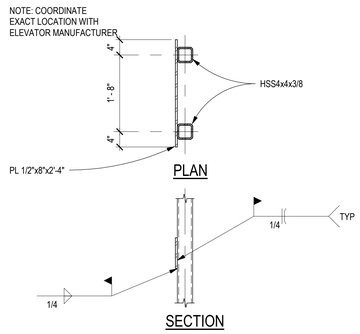

D3 ELEV RAIL BRACKET SUPPORT
SCALE: 3/4" = 1'-0"

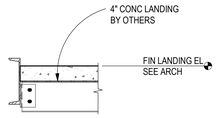

D4 STAIR LANDING SECTION
SCALE: 3/4" = 1'-0"

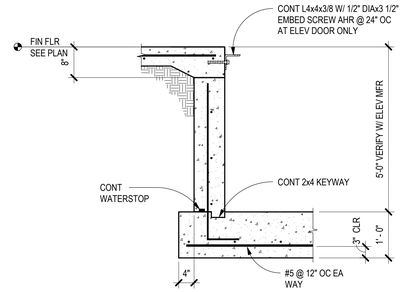

D5 ELEVATOR PIT SECTION
SCALE: 3/4" = 1'-0"

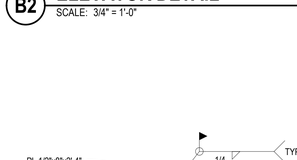

ELEVATOR RAIL SUPPORT TO JOIST

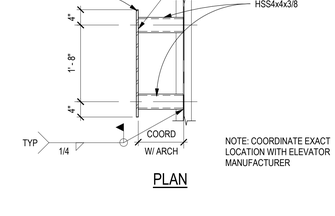

ELEVATOR RAIL SUPPORT TO BEAM

C2 ELEV RAIL SUPPORT TO ROOF
SCALE: 3/4" = 1'-0"

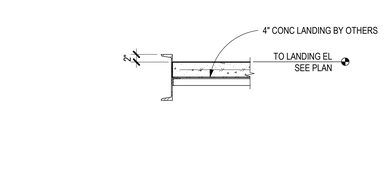

C3 INTERMEDIATE LANDING SECTION
SCALE: 3/4" = 1'-0"

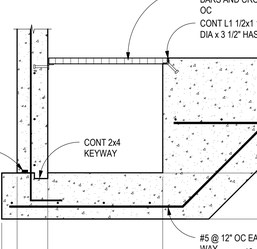

C4 ELEVATOR SEPARATOR BEAM
SCALE: 3/4" = 1'-0"

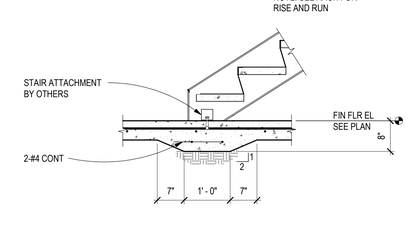

C5 ELEVATOR OPENING SECTION
SCALE: 3/4" = 1'-0"

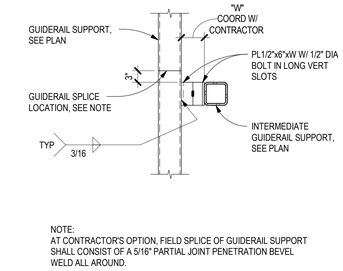

NOTE:
AT CONTRACTOR'S OPTION, FIELD SPLICE OF GUIDERAIL SUPPORT SHALL CONSIST OF A 5/16" PARTIAL JOINT PENETRATION BEVEL WELD ALL AROUND.

B1 GUIDERAIL @ INTERMEDIATE SUPPORT
SCALE: 3/4" = 1'-0"

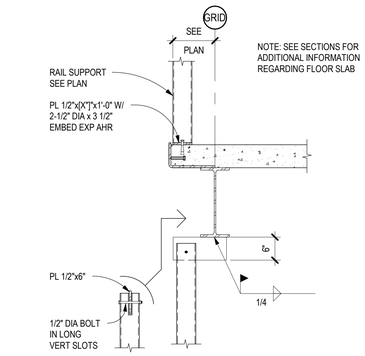

B2 ELEVATOR DETAIL
SCALE: 3/4" = 1'-0"

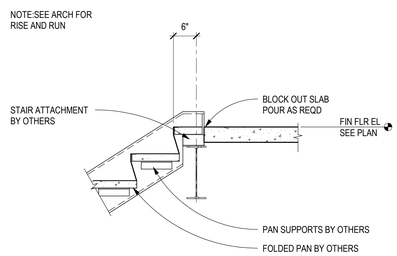

B3 STAIR STRINGER AT LANDING
SCALE: 3/4" = 1'-0"

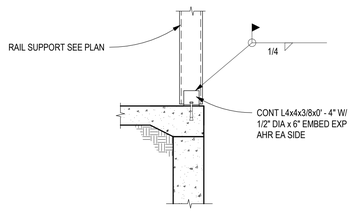

B4 ELEVATOR PIT SECTION
SCALE: 3/4" = 1'-0"

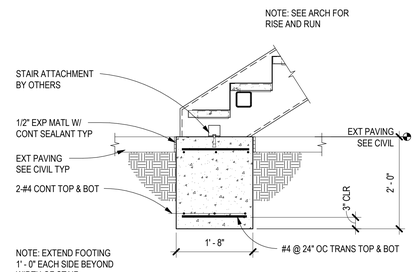

B5 STAIR BASE DETAIL
SCALE: 3/4" = 1'-0"

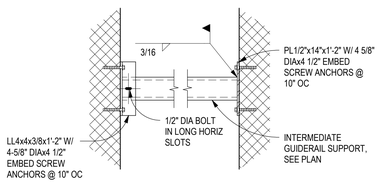

A1 INTERMEDIATE SUPPORT @ CMU
SCALE: 3/4" = 1'-0"

PLAN

A2 ELEV RAIL BRACKET SUPPORT
SCALE: 3/4" = 1'-0"

A3 STAIR LANDING SECTION
SCALE: 3/4" = 1'-0"

A4 ELEVATOR SUMP PIT SECTION
SCALE: 3/4" = 1'-0"

A5 TYPICAL STAIR BASE DETAIL
SCALE: 3/4" = 1'-0"

James R. Childers
Architect, Inc.
45 South 4th Street
Fort Smith, AR 72901
479-783-2480
www.childersarchitect.com

PROFESSIONAL SEAL:
ARKANSAS REGISTERED PROFESSIONAL ENGINEER
CHRIS S. ROMERO
23576
11.01.19

CONSULTANT LOGO:
Chavez-Grieves
consulting engineers, inc.
4700 Lincoln Road NE, Suite 102 Albuquerque, NM 87109
505-344-4080 505-343-8759 (fax)

CLIENT:
THE CHEROKEE NATION
SEAL OF
FIRST CAPITAL
SEPT. 6, 1839

WILMA P. MANKILLER HEALTH CENTER EXPANSION
STILWELL, OKLAHOMA

KEY PLAN:

PROJECT PHASE:
BID PACKAGE 01

REVISIONS:		
#	DATE	DESCRIPTION

DATE:	JOB NUMBER:
11-01-19	18-01.01

SHEET NUMBER:
S5.41

VERTICAL CIRCULATION DETAILS

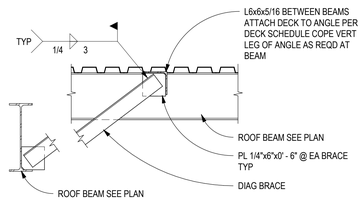

D1 DIAG BRACE TO ROOF STRUCTURE
SCALE: 3/4" = 1'-0"

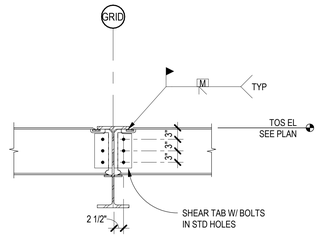

D2 BEAM TO BEAM MOMENT CONN
SCALE: 3/4" = 1'-0"

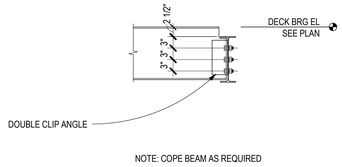

D3 BEAM TO BEAM CONN
SCALE: 3/4" = 1'-0"

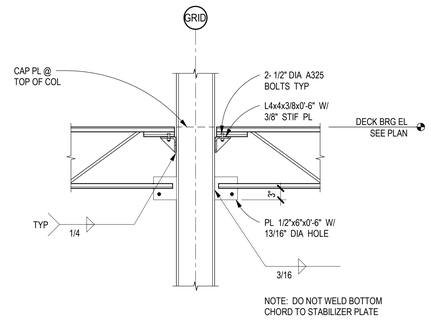

D4 JOIST TO COLUMN FLANGE CONN
SCALE: 3/4" = 1'-0"

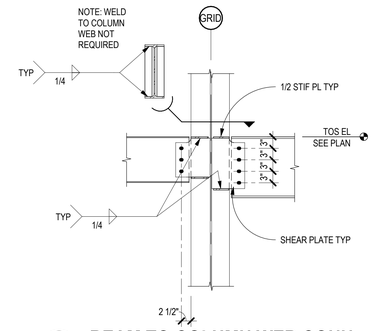

D5 BEAM TO COLUMN WEB CONN
SCALE: 3/4" = 1'-0"

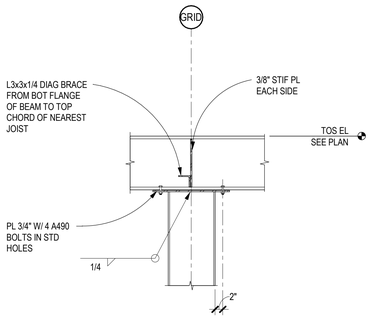

C1 BEAM OVER COLUMN CONN
SCALE: 3/4" = 1'-0"

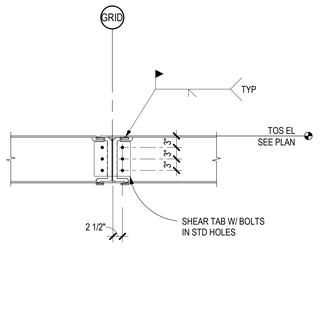

C2 BEAM TO BEAM MOMENT CONN
SCALE: 3/4" = 1'-0"

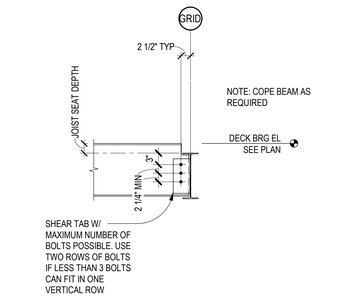

C3 BEAM TO BEAM CONNECTION
SCALE: 3/4" = 1'-0"

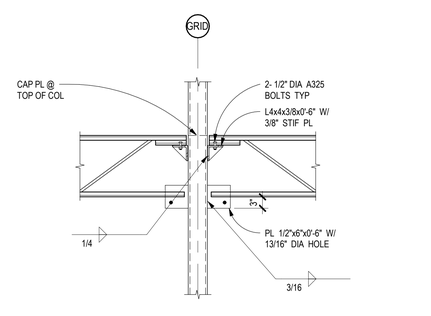

C4 JOISTS TO COLUMN CONN
SCALE: 3/4" = 1'-0"

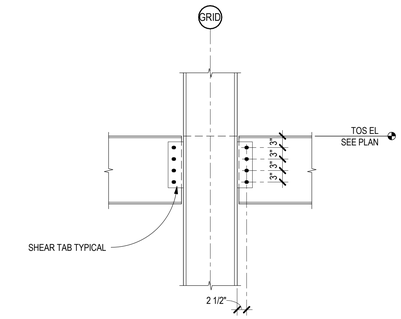

C5 BEAM TO COLUMN FLANGE CONN
SCALE: 3/4" = 1'-0"

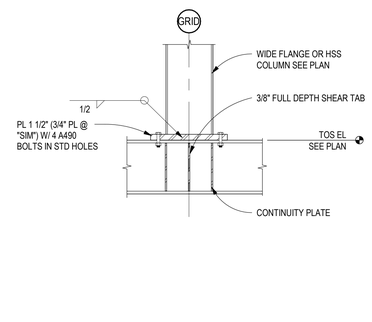

B1 COL TO TRANSFER GIDER
SCALE: 3/4" = 1'-0"

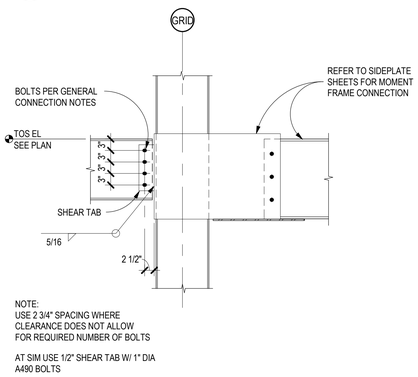

B2 BM TO COL FLANGE AT SIDEPLATE
SCALE: 3/4" = 1'-0"

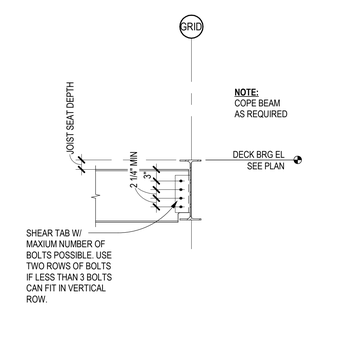

B3 TYPICAL BEAM TO BEAM CONN
SCALE: 3/4" = 1'-0"

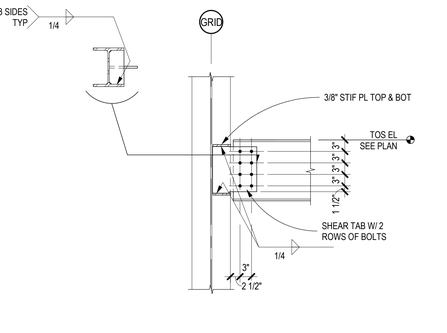

B4 BEAM TO COL - 2 ROWS OF BOLTS
SCALE: 3/4" = 1'-0"

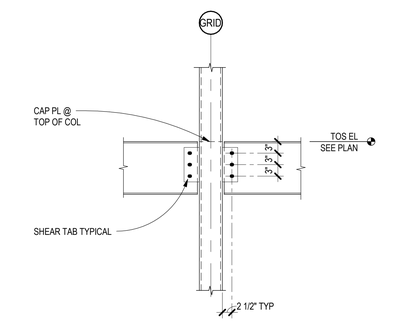

B5 BEAM TO COLUMN CONN
SCALE: 3/4" = 1'-0"

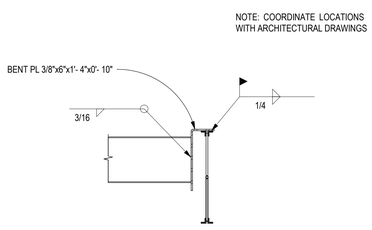

A1 BEAM TO JOIST CONNECTION
SCALE: 3/4" = 1'-0"

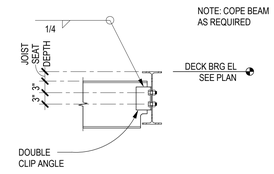

A2 BEAM TO BEAM CONN
SCALE: 3/4" = 1'-0"

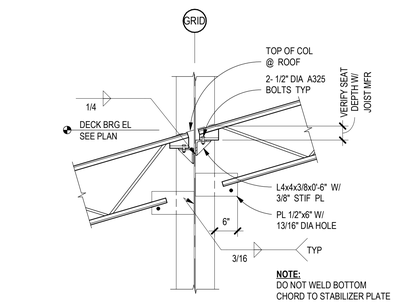

A3 JOIST TO COLUMN CONN
SCALE: 3/4" = 1'-0"

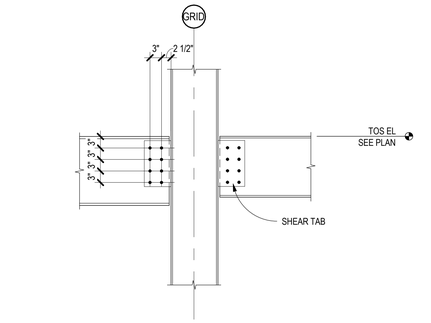

A4 BEAM TO COL - 2 ROWS OF BOLTS
SCALE: 3/4" = 1'-0"

1. PROVIDE 1/4" CAP PLATE AT THE TOP OF ALL HOLLOW STRUCTURAL STEEL (HSS) COLUMNS UNLESS NOTED OTHERWISE.
2. PROVIDE 1/4" CAP PLATE AT THE TOP OF ALL PIPE COLUMNS UNLESS NOTED OTHERWISE.
3. PROVIDE 1/2" CAP PLATE AT THE TOP OF ALL WIDE FLANGE COLUMNS UNLESS NOTED OTHERWISE.
4. PROVIDE 1/4" END PLATE AT ALL EXPOSED HSS MEMBERS UNLESS NOTED OTHERWISE.
5. ALL CONNECTION CLIP ANGLES SHALL BE L4x4x3/8 UNLESS NOTED OTHERWISE. BOLT ANGLE TO SUPPORTING MEMBER UNLESS NOTED OTHERWISE.
6. ALL CONNECTION SHEAR TABS SHALL BE PL 3/8" UNLESS NOTED OTHERWISE. PROVIDE 5/16" FILLET WELD EACH SIDE OF SHEAR TAB TO SUPPORTING MEMBER.
7. ALL BOLTS SHALL BE 3/4 " DIAMETER A325N IN SHORT SLOTS AS FOLLOWS UNLESS NOTED OTHERWISE:
   - 2 @ W8, W10
   - 3 @ W12
   - 4 @ W14, W16
   - 5 @ W18, S21
   - 6 @ W24
   - 7 @ W27
   - 8 @ W30
   - 9 @ W33
   - 10 @ W36
   - 11 @ W40
   - 12@ W44

A5 TYPICAL STEEL CONN NOTES
SCALE: 3/4" = 1'-0"

James R. Childers Architect, Inc.
45 South 4th Street
Fort Smith, AR 72901
479-783-2480
www.childersarchitect.com

PROFESSIONAL SEAL:



CONSULTANT LOGO:

Chavez-Grieves
consulting engineers, inc.
4700 Lincoln Road NE, Suite 102 Albuquerque, NM 87109
505-344-4080 505-343-8759 (fax)

CLIENT:

THE CHEROKEE NATION

WILMA P. MANKILLER HEALTH CENTER EXPANSION
STILWELL, OKLAHOMA

KEY PLAN:

PROJECT PHASE:
BID PACKAGE 01

REVISIONS		
#	DATE	DESCRIPTION

DATE: 11-01-19
JOB NUMBER: 18-01.01
SHEET NUMBER: S5.51

STEEL DETAILS

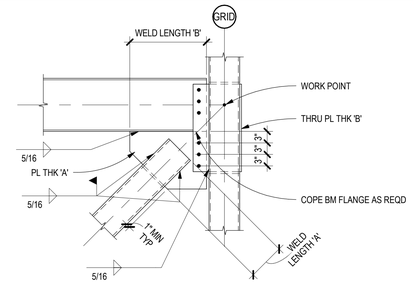

CONNECTION SCHEDULE					
BRACE SIZE	PL THK 'A'	THRU PL THK 'B'	WELD LENGTH 'A'	WELD LENGTH 'B'	GUSSET PL BOLTS
HSS4x4	5/8"	5/8"	4"	20"	3
HSS5x5	5/8"	5/8"	5"	20"	3
HSS6x6	5/8"	5/8"	6"	22"	3
HSS8x8	3/4"	3/4"	8"	24"	4
HSS12x8	1"	1"	12"	28"	5

NOTES
1. LENGTHS GIVEN ARE SINGLE-SIDE LENGTHS AND MINIMUM LENGTHS
2. LONGER GUSSET/WELD LENGTHS MAY BE REQ'D WHERE BRACE SLOPE VARIES FROM 1:1
3. ALL BOLTS IN STANDARD HOLES

D2 BRACED FRAME CONNECTION
SCALE: 3/4" = 1'-0"

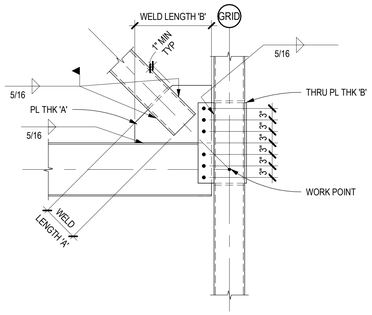

CONNECTION SCHEDULE					
BRACE SIZE	PL THK 'A'	THRU PL THK 'B'	WELD LENGTH 'A'	WELD LENGTH 'B'	GUSSET PL BOLTS
HSS4x4	5/8"	5/8"	4"	20"	3
HSS5x5	5/8"	5/8"	5"	20"	3
HSS6x6	5/8"	5/8"	6"	22"	3
HSS8x8	3/4"	3/4"	8"	24"	4
HSS12x8	1"	1"	12"	28"	5

NOTES
1. LENGTHS GIVEN ARE SINGLE-SIDE LENGTHS AND MINIMUM LENGTHS
2. LONGER GUSSET/WELD LENGTHS MAY BE REQ'D WHERE BRACE SLOPE VARIES FROM 1:1
3. ALL BOLTS IN STANDARD HOLES

B2 BRACED FRAME CONNECTION
SCALE: 3/4" = 1'-0"

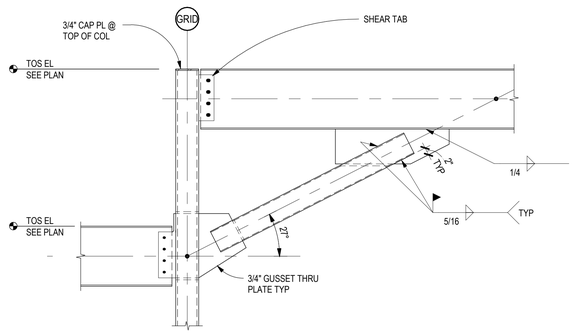

A1 COLLECTOR FRAMING DETAIL
SCALE: 3/4" = 1'-0"

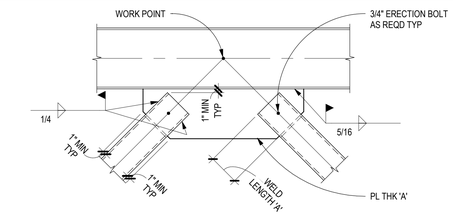

CONNECTION SCHEDULE		
BRACE SIZE	PL THK 'A'	WELD LENGTH 'A'
HSS3 1/2x3 1/2	5/8"	4"

NOTES
1. LENGTHS GIVEN ARE SINGLE-SIDE LENGTHS AND MINIMUM REQUIRED LENGTHS
2. LONGER GUSSET/WELD LENGTHS MAY BE REQ'D WHERE BRACE SLOPE VARIES FROM 1:1
3. BRACE AND GUSSET CONNECTION CAN OCCUR ON TOP AND BOTTOM FLANGES

D3 BRACED FRAME CONNECTION
SCALE: 3/4" = 1'-0"

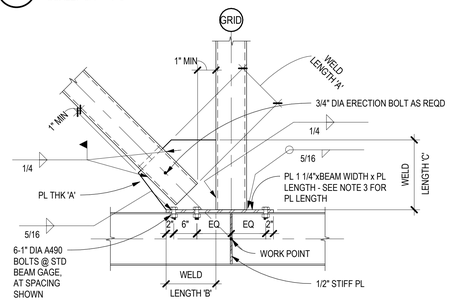

CONNECTION SCHEDULE				
BRACE SIZE	PL THK 'A'	WELD LENGTH 'A'	WELD LENGTH 'B'	WELD LENGTH 'C'
HSS3 1/2x3 1/2	5/8"	4"	12"	12"
HSS5x5	1/2"	5"	12"	12"

NOTES
1. LENGTHS GIVEN ARE SINGLE-SIDE LENGTHS AND MINIMUM LENGTHS
2. LONGER GUSSET/WELD LENGTHS MAY BE REQ'D WHERE BRACE SLOPE VARIES FROM 1:1
3. PLATE LENGTHS: BASED ON POST SIZE
   A. HSS5x5 & HSS6x6: 2' - 0"

C3 BRACED FRAME CONNECTION
SCALE: 3/4" = 1'-0"

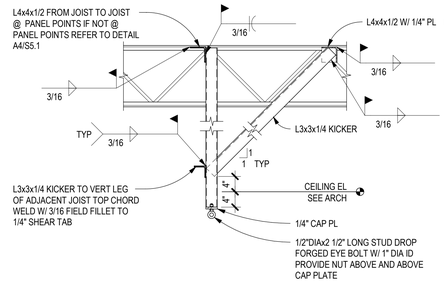

C4 SWING SUPPORT BETWEEN JOISTS
SCALE: 3/4" = 1'-0"

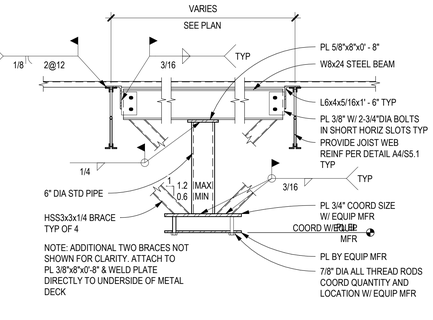

C5 SURGICAL LIGHT SUPPORT
SCALE: 3/4" = 1'-0"

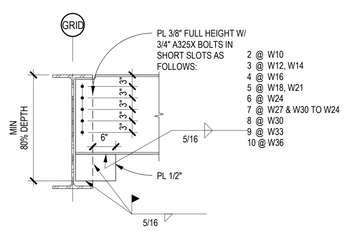

A3 BEAM CONN AT MOMENT (WUF) CONN
SCALE: 3/4" = 1'-0"

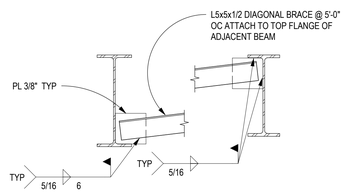

B3 DIAG ANGLE AT MOMENT CONN
SCALE: 3/4" = 1'-0"

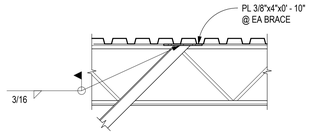

B4 LIGHT SUPPORT BETWEEN JOISTS
SCALE: 3/4" = 1'-0"

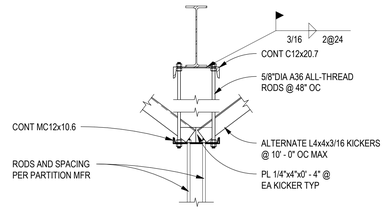

B5 PARTITION SUPPORT SECTION
SCALE: 3/4" = 1'-0"

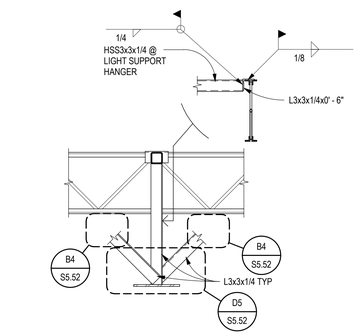

A4 LIGHT SUPPORT BETWEEN JOISTS
SCALE: 3/4" = 1'-0"

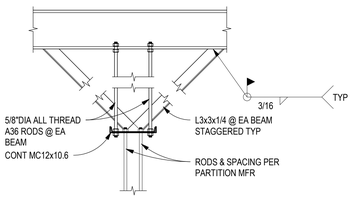

A5 PARTITION FRAMING SECTION
SCALE: 3/4" = 1'-0"

James R. Childers Architect, Inc.
45 South 4th Street
Fort Smith, AR 72901
479-783-2480
www.childersarchitect.com

PROFESSIONAL SEAL:
CHRIS S. ROMERO 23576 REGISTERED PROFESSIONAL ENGINEER
11.01.19

CONSULTANT LOGO:
Chavez-Grieves consulting engineers, inc.
4700 Lincoln Road NE, Suite 102 Albuquerque, NM 87109
505-344-4080 505-343-8759 (fax)

CLIENT:
THE CHEROKEE NATION ESTD. 1839 SEPT. 6, 1839

WILMA P. MANKILLER HEALTH CENTER EXPANSION
STILWELL, OKLAHOMA

KEY PLAN:

PROJECT PHASE:
BID PACKAGE 01

REVISIONS		
#	DATE	DESCRIPTION

DATE: 11-01-19
JOB NUMBER: 18-01.01
SHEET NUMBER: S5.52
STEEL DETAILS

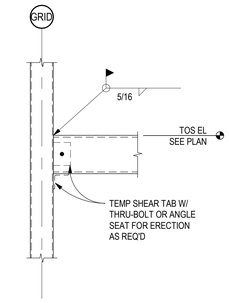

D1 HSS TO COLUMN WITH PARTIAL FIXITY
SCALE: 3/4" = 1'-0"

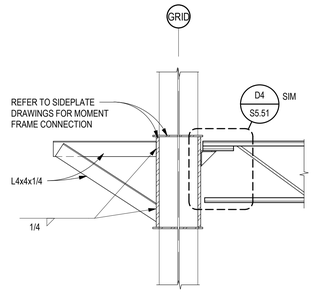

D2 BM TO COL WEB CONN AT SIDEPLATE
SCALE: 3/4" = 1'-0"

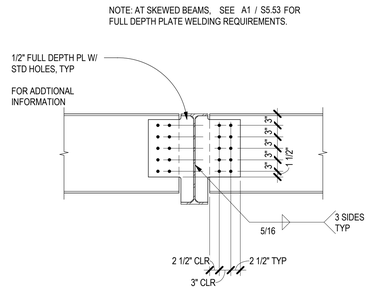

D3 BEAM TO BEAM COLLECTOR DETAIL
SCALE: 3/4" = 1'-0"

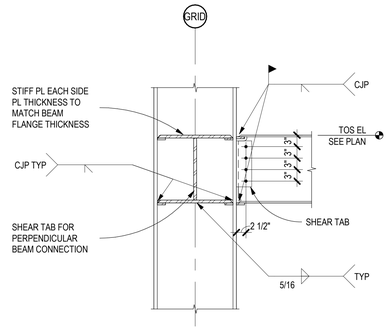

D4 BEAM TO COL FLANGE MOMENT CONN
SCALE: 3/4" = 1'-0"

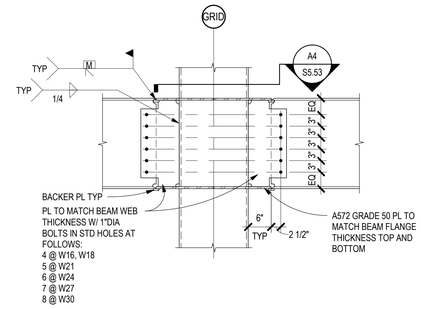

D5 TYPICAL FLANGE PLATE TO COLUMN
SCALE: 3/4" = 1'-0"

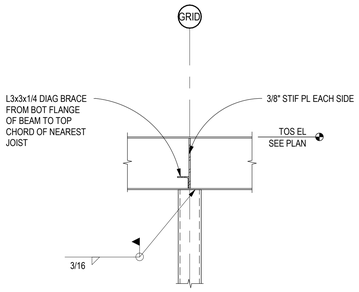

C1 BEAM OVER COLUMN CONN
SCALE: 3/4" = 1'-0"

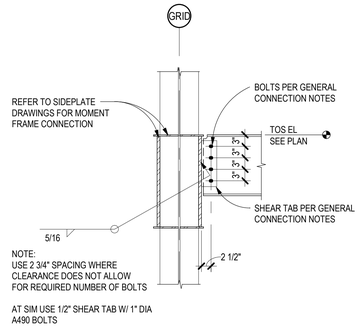

C2 BM TO COL WEB CONN AT SIDEPLATE
SCALE: 3/4" = 1'-0"

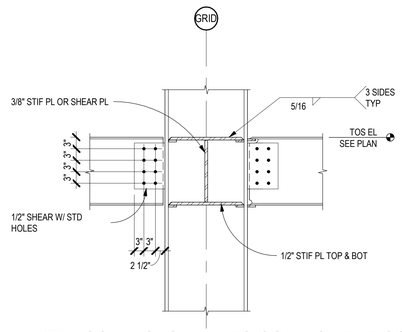

C3 COLLECTOR BM TO COL MOMENT CONN
SCALE: 3/4" = 1'-0"

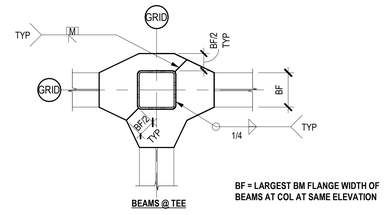

BF = LARGEST BM FLANGE WIDTH OF BEAMS AT COL AT SAME ELEVATION

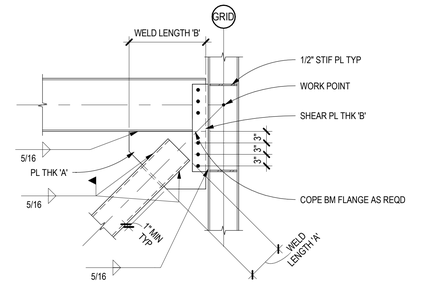

CONNECTION SCHEDULE					
BRACE SIZE	PL THK 'A'	THRU PL THK 'B'	WELD LENGTH 'A'	WELD LENGTH 'B'	GUSSET PL BOLTS
HSS4x4	5/8"	5/8"	4"	20"	3
HSS5x5	5/8"	5/8"	5"	20"	3
HSS6x6	5/8"	5/8"	6"	22"	3
HSS8x8	3/4"	3/4"	8"	24"	4
HSS12x8	1"	1"	12"	28"	5

NOTES
1. LENGTHS GIVEN ARE SINGLE-SIDE LENGTHS AND MINIMUM LENGTHS
2. LONGER GUSSET/WELD LENGTHS MAY BE REQ'D WHERE BRACE SLOPE VARIES FROM 1:1
3. ALL BOLTS IN STANDARD HOLES

B5 BRACED FRAME CONNECTION
SCALE: 3/4" = 1'-0"

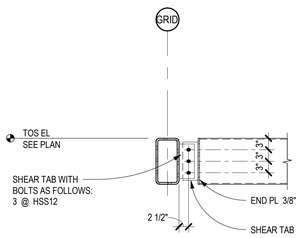

B1 BEAM TO BEAM CONN
SCALE: 3/4" = 1'-0"

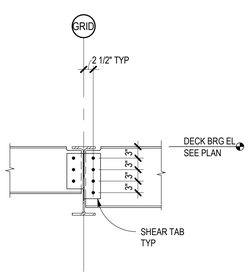

B2 TYPICAL BEAM TO BEAM CONN
SCALE: 3/4" = 1'-0"

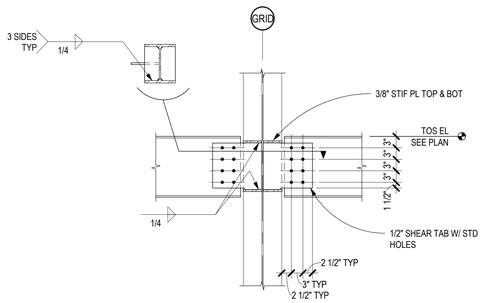

B3 COLLECTOR BM TO COL WEB CONN
SCALE: 3/4" = 1'-0"

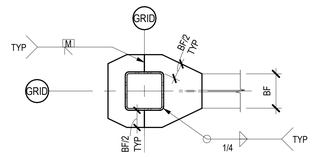

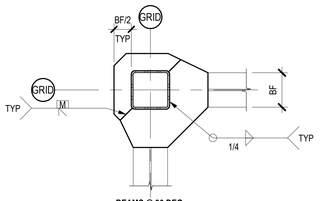

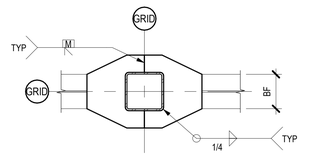

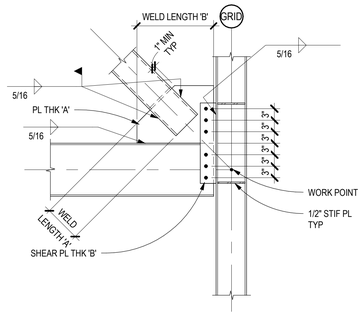

CONNECTION SCHEDULE					
BRACE SIZE	PL THK 'A'	THRU PL THK 'B'	WELD LENGTH 'A'	WELD LENGTH 'B'	GUSSET PL BOLTS
HSS4x4	5/8"	5/8"	4"	20"	3
HSS5x5	5/8"	5/8"	5"	20"	3
HSS6x6	5/8"	5/8"	6"	22"	3
HSS8x8	3/4"	3/4"	8"	24"	4
HSS12x8	1"	1"	12"	28"	5

NOTES
1. LENGTHS GIVEN ARE SINGLE-SIDE LENGTHS AND MINIMUM LENGTHS
2. LONGER GUSSET/WELD LENGTHS MAY BE REQ'D WHERE BRACE SLOPE VARIES FROM 1:1
3. ALL BOLTS IN STANDARD HOLES

B5 BRACED FRAME CONNECTION
SCALE: 3/4" = 1'-0"

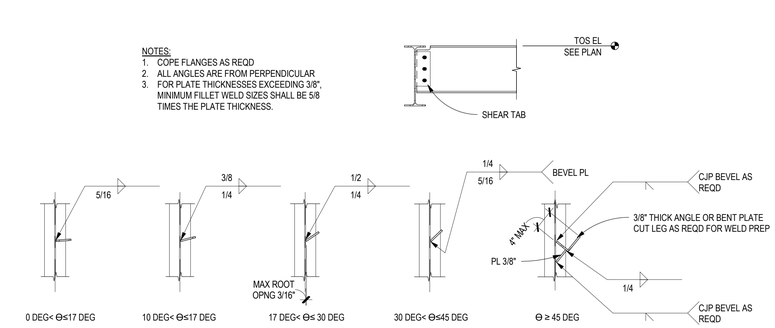

A1 SKEWED BEAM TO BEAM CONN
SCALE: 3/4" = 1'-0"

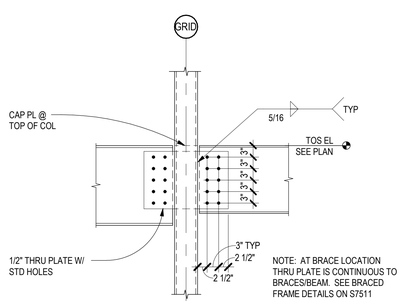

NOTE: AT BRACE LOCATION THRU PLATE IS CONTINUOUS TO BRACES/BEAM. SEE BRACED FRAME DETAILS ON S7511

A3 COLLECTOR BEAM TO COLUMN CONN
SCALE: 3/4" = 1'-0"

A4 FLANGE PLATE CONN AT HSS COL
SCALE: 3/4" = 1'-0"

A5 BRACED FRAME CONNECTION
SCALE: 3/4" = 1'-0"

James R. Childers Architect, Inc.
45 South 4th Street
Fort Smith, AR 72901
479-783-2480
www.childersarchitect.com

PROFESSIONAL SEAL:

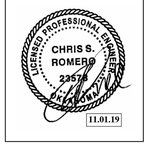

CONSULTANT LOGO:

Chavez-Grieves
consulting engineers, inc.
4700 Lincoln Road NE, Suite 102 Albuquerque, NM 87109
505-344-4080 505-343-8759 (fax)

CLIENT:

THE CHEROKEE NATION
1839 SEPT. 6, 1839 1ST CAPITAL

WILMA P. MANKILLER HEALTH CENTER EXPANSION
STILWELL, OKLAHOMA

KEY PLAN:

PROJECT PHASE:
BID PACKAGE 01

REVISIONS:		
#	DATE	DESCRIPTION

DATE: 11-01-19
JOB NUMBER: 18-01.01
SHEET NUMBER: S5.53

STEEL DETAILS

CMU LINTEL SCHEDULE							
OPENING WIDTH	WIDTH	DEPTH	LINTEL REINFORCING		SILL		LINTEL JAMB TYPE
			TOP	BOTTOM	DEPTH	REINFORCING	
0' - 0" - 8' - 0"	12"	32"	2 - #5	2 - #5	8"	2 - #5	TYPE A

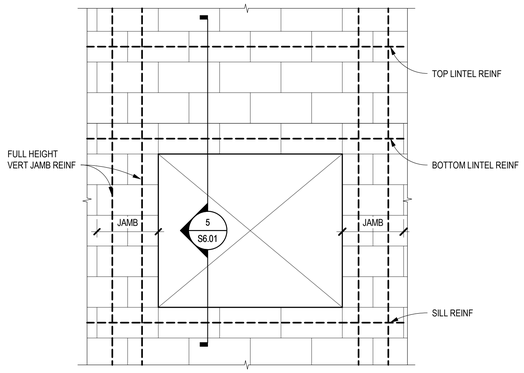

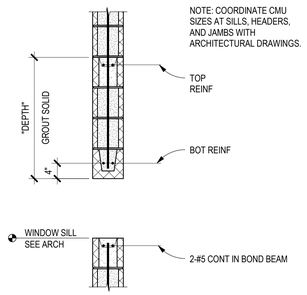

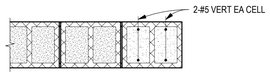

TYPE A

NOTE: SEE TYPICAL CMU PLAN DETAILS SHEET S7.21 FOR TYPICAL HOIRZONTAL REINFORCING REQUIREMENTS.

DECK SCHEDULE												
MARK	COMPOSITE SLAB	SLAB			METAL DECK				DECK ATTACHMENTS			TOTAL SLAB / DECK THICKNESS	COMMENTS
		THICK	MATL	REINF	THICK	TYPE	GAGE	FINISH	ATTACH PERP TO RIBS	ATTACH PARALLEL TO RIBS	ATTACH SIDELAPS		
D1.5R		- -	- -	- -	1 1/2"	HSB	20	GALVANIZED	7-5/8 "DIA PUDDLE WELDS PER 36 "WIDE SHEET	5/8" DIA PUDDLE WELDS @ 6" OC	#10 SCREWS @ 9" OC	1 1/2"	
D6F	X	3"	NW CONC	6x6 - W2.1xW2.1 WELD WIRE FABRIC IN FLAT SHEETS	3"	W3	20	GALVANIZED	4-5/8 "DIA PUDDLE WELDS PER 36 "WIDE SHEET	5/8" DIA PUDDLE WELDS @ 12" OC	#10 SCREWS @ 12" OC	6"	

SLAB-ON-GRADE SCHEDULE					
MARK	SLAB		REINFORCING	BEARING STRATA	COMMENTS
	THICKNESS	MATL			
S5	5"	CONC	#4 @ 18" OC EA WAY	15 MIL VAPOR RETARDER OVER 1/2" SAND BLOTTER LAYER OVER 4" COMPACTED GRANULAR FILL OVER 14" OF COMPACTED STRUCTURAL FILL OVER COMPACTED SUBGRADE. SUBGRADE WILL BE PLACED WITH LASER LEVEL	PREPARE SUBGRADE AND STRUCTURAL FILL PER GEOTECHNICAL REPORT
S6	6"	CONC	#4 @ 12" OC EA WAY	15 MIL VAPOR RETARDER OVER 1/2" SAND BLOTTER LAYER OVER 4" COMPACTED GRANULAR FILL OVER 14" OF COMPACTED STRUCTURAL FILL OVER COMPACTED SUBGRADE. SUBGRADE WILL BE PLACED WITH LASER LEVEL	PREPARE SUBGRADE AND STRUCTURAL FILL PER GEOTECHNICAL REPORT

BASE PLATE SCHEDULE			
MARK	BASE PLATE		ANCHOR BOLTS
	TYPE	SIZE "T"x"A"x"B"	F1554 ANCHOR BOLTS; TYPE
BP1	A	PL 1 1/4"x18"x1'-6"	4 - 3/4" DIA x 9"; GRAVITY
BP2	A	PL 1 3/4"x18"x1'-6"	4 - 3/4" DIA x 9"; GRAVITY
BP3	A	PL 1 3/4"x20"x1'-8"	4 - 3/4" DIA x 9"; GRAVITY
BP4	A	PL 1 3/4"x22"x1'-10"	6 - 1" DIA x 18"; GRAVITY
BP5	A	PL 3/4"x14"x1'-2"	4 - 3/4" DIA x 9"; GRAVITY
BP6	B	PL 1 3/4"x26"x1'-8"	6 - 1" DIA x 18"; LATERAL
BP7	B	PL 1 3/4"x22"x1'-8"	6 - 1" DIA x 18"; LATERAL
BP8	C	PL 1 1/4"x20"x1'-4"	6 - 1" DIA x 18"; LATERAL
BP9	D	PL 3/4"x14"x1'-2"	4 - 3/4" DIA x 9"; GRAVITY
BP10	D	PL 3/4"x14"x1'-2"	8 - 3/4" DIA x 9"; GRAVITY

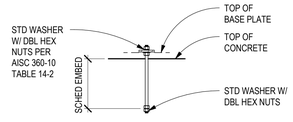

GRAVITY ANCHOR BOLT

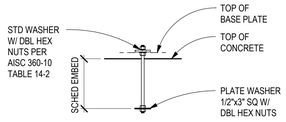

LATERAL ANCHOR BOLT

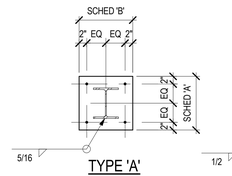

TYPE 'A'

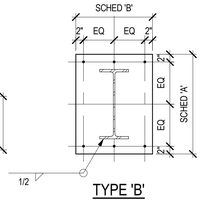

TYPE 'B'

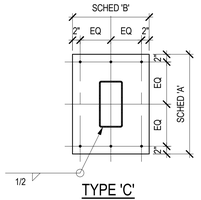

TYPE 'C'

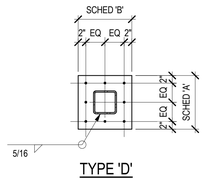

TYPE 'D'

WALL SCHEDULE						
MARK	VENEER	WALL	REINFORCING			COMMENTS
			VERTICAL	HORIZONTAL	GRADE	
WC8	- -	8" CONC	#4 @ 12" OC	#4 @ 12" OC	A615	
WC12	SEE ARCH	12" CONC	#5 @ 12" OC EA FACE	#5 @ 12" OC EA FACE	A615	
WM12	SEE ARCH	12" CMU	#7 @ 16" OC EA FACE	#5 @ 24" OC EA FACE & STD LADDER TYPE JOINT REINF @ 16" OC	A615	GROUT ALL CELLS SOLID. SEE 7.21 FOR MASONRY DETAILS. D4/S7.21 FOR HORIZONTAL REINFORCEMENT LOCATION

REQUIRED LAP SPLICES ACI318-14/ IBC 2015								
REINFORCEMENT TYPE	#6 AND SMALLER (#db)			#7 THROUGH #11 (#db)			MINIMUM LENGTH (IN)	COMMENTS
	3000PSI	4000PSI	5000PSI	3000PSI	4000PSI	5000PSI		
CONTINUOUS WALL FOOTINGS AND HORIZONTAL REINFORCEMENT IN SITE WALLS	30	30	30	30	30	30	18	
CONCRETE WALLS: ALL VERTICAL REINFORCEMENT	44	38	34	55	48	43	12	
CONCRETE WALLS: ALL HORIZONTAL REINFORCEMENT, EXCLUDING SITE WALLS AND STEMWALLS	57	50	45	72	62	56	12	
CONCRETE COLUMNS	44	38	34	55	48	43	12	
TOP FLEXURAL REINFORCEMENT, INCLUDING BEAMS, GRADE BEAMS, AND COMBINED COLUMN FOOTINGS	57	50	45	72	62	56	12	
BOTTOM FLEXURAL REINFORCEMENT, INCLUDING BEAMS, GRADE BEAMS, AND COMBINED COLUMN FOOTINGS	44	38	34	55	48	43	12	
MINIMUM EMBEDMENT OF STANDARD HOOKS INTO CONCRETE BASE	22	19	17	22	19	17	6	ALLOWED FOR BARS LARGER THAN #11
SLABS ON GRADE	30	30	30	30	30	30	12	
SLABS ON METAL DECK	30	30	30	30	30	30	12	WWF MINIMUM LAP LENGTH = 6 IN

NOTES:
- LAP SPLICES SHALL NOT BE PERMITTED FOR BARS LARGER THAN #11.
- LAP SPLICES FOR BUNDLED BARS SHALL BE IN ACCORDANCE WITH ACI 318-14 SECTION 25.5.1.4
- LAP LENGTHS FOR LIGHTWEIGHT CONCRETE SHALL BE INCREASED BY 33%
- LAP LENGTHS FOR EPOXY COATED BARS SHALL BE INCREASED BY 50%
- FOR INTERMEDIATE OR LARGER VALUES OF F'c, USE THE CLOSEST LOWER VALUE IN THE TABLE. DO NOT INTERPOLATE

MASONRY LAP SPLICES (#db) ACI 530-13/ IBC 2015							
	#3	#4	#5	#6	#7	#8	#9
6" BLOCK WITH 1-LAYER OF REINFORCEMENT	32	40	51	72	N/A	N/A	N/A
8" BLOCK WITH 1-LAYER OF REINFORCEMENT	32	29	36	58	68	72	N/A
8" BLOCK WITH 2-LAYERS OF REINFORCEMENT	51	68	72	72	N/A	N/A	N/A
12" BLOCK WITH 1-LAYER OF REINFORCEMENT	32	24	23	37	43	57	65
12" BLOCK WITH 2-LAYERS OF REINFORCEMENT	51	68	72	72	72	N/A	N/A
16" BLOCK WITH 1-LAYER OF REINFORCEMENT	32	24	23	30	32	42	48
16" BLOCK WITH 2-LAYERS OF REINFORCEMENT	51	68	72	72	72	72	72

BARS LARGER THAN #9 SHALL BE SPLICED USING MECHANICAL CONNECTIONS

SPOT FOOTING SCHEDULE						
MARK	SIZE			REINFORCING		COMMENTS
	WIDTH	LENGTH	DEPTH	REINFORCING	GRADE	
F48	4' - 0"	4' - 0"	1' - 0"	4 - #5 EA WAY BOT	A615	
F48P	4' - 0"	4' - 0"	1' - 0"	4 - #5 EA WAY BOT	A615	
F60	5' - 0"	5' - 0"	1' - 6"	5 - #6 EA WAY BOT	A615	
F60A	5' - 0"	5' - 0"	2' - 0"	6 - #6 EA WAY TOP & BOT	A615	
F72	6' - 0"	6' - 0"	1' - 6"	6 - #6 EA WAY BOT	A615	
F72A	6' - 0"	6' - 0"	2' - 0"	8 - #6 EA WAY TOP & BOT	A615	TOP BARS TO HAVE STD HOOKS AT ENDS
F72P	6' - 0"	6' - 0"	1' - 6"	6 - #6 EA WAY TOP & BOT	A615	TOP BARS TO HAVE STD HOOKS AT ENDS
F84	7' - 0"	7' - 0"	2' - 0"	9 - #6 EA WAY BOT	A615	
F84A	7' - 0"	7' - 0"	2' - 0"	9 - #6 EA WAY TOP & BOT	A615	TOP BARS TO HAVE STD HOOKS AT ENDS
F84P	7' - 0"	7' - 0"	2' - 0"	9 - #6 EA WAY TOP & BOT	A615	TOP BARS TO HAVE STD HOOKS AT ENDS
F96	8' - 0"	8' - 0"	2' - 0"	7 - #7 EA WAY BOT	A615	
F96A	8' - 0"	8' - 0"	2' - 0"	7 - #7 EA WAY TOP & BOT	A615	TOP BARS TO HAVE STD HOOKS AT ENDS
F276	23' - 0"	21' - 0"	2' - 9"	#8 @ 9" OC EA WAY TOP & BOT	A615	TOP BARS TO HAVE STD HOOKS AT ENDS

CONTINUOUS FOOTING SCHEDULE					
MARK	SIZE		REINFORCING		COMMENTS
	WIDTH	DEPTH	CONTINUOUS	TRANSVERSE	
CF16	1' - 4"	1' - 0"	3 - #4	#4 @ 48" OC	
CF24	2' - 0"	1' - 0"	3 - #4	#4 @ 48" OC	
CF84	7' - 0"	2' - 9"	8 - #8	#8 @ 9" OC	TOP BARS TO HAVE STD HOOKS AT ENDS

James R. Childers Architect, Inc.
45 South 4th Street
Fort Smith, AR 72901
479-783-2480
www.childersarchitect.com

PROFESSIONAL SEAL:
CHRIS S. ROMERO 23576 REGISTERED PROFESSIONAL ENGINEER
11.01.19

CONSULTANT LOGO:
Chavez-Grieves consulting engineers, inc.
4700 Lincoln Road NE, Suite 102 Albuquerque, NM 87109
505-344-4080 505-343-8759 (fax)

CLIENT:
THE CHEROKEE NATION TAHLEQUAH, OKLA. SEPT. 6, 1839

WILMA P. MANKILLER HEALTH CENTER EXPANSION
STILWELL, OKLAHOMA

KEY PLAN:

PROJECT PHASE:
BID PACKAGE 01

REVISIONS		
#	DATE	DESCRIPTION

DATE: 11-01-19
JOB NUMBER: 18-01.01
SHEET NUMBER: S6.01
SCHEDULES

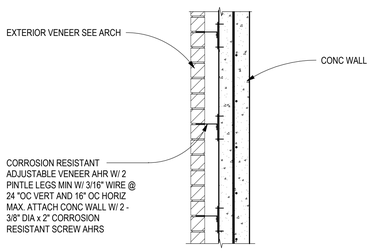

D1 TYPICAL VENEER TO CONC WALL
SCALE: NTS

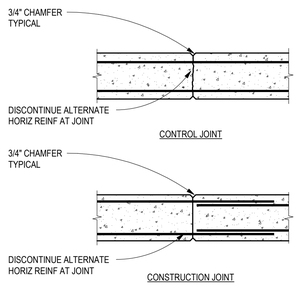

D2 TYPICAL WALL JOINT DETAIL
SCALE: NTS

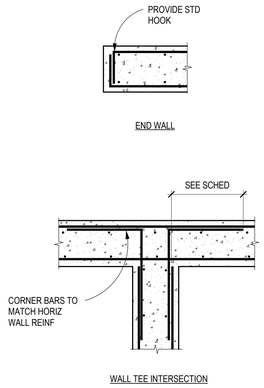

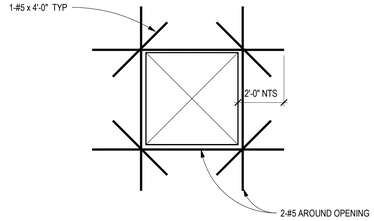

D4 TYPICAL OPNG IN CONC WALL DETAIL
SCALE: NTS

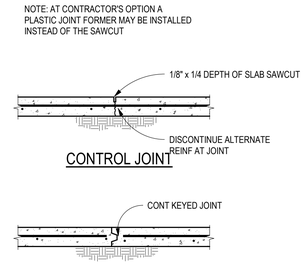

D5 TYPICAL SLAB JOINT
SCALE: NTS

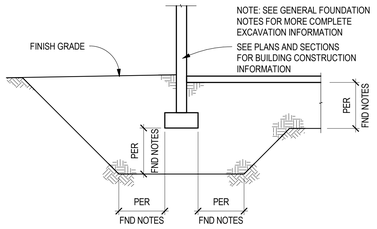

C1 TYPICAL FND EXCAVATION DETAIL
SCALE: NTS

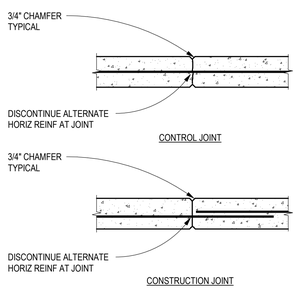

C2 TYPICAL WALL JOINT DETAIL
SCALE: NTS

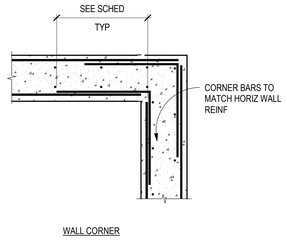

NOTE: REINFORCING SHOWN ON FOUNDATION SECTIONS AND SPECIFICALLY REFERENCED DETAILS SHALL TAKE GOVERN OVER REINFORCING IN STANDARD DETAILS.

C3 TYPICAL DOUBLE MAT WALL REINF
SCALE: NTS

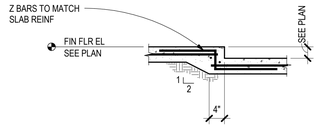

C4 TYPICAL DEPRESSED SLAB
SCALE: 3/4" = 1'-0"

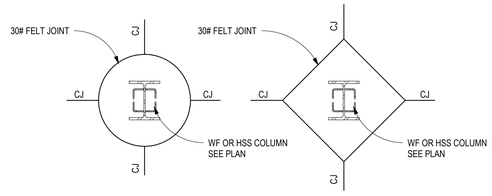

NOTE : CONTRACTOR'S OPTION FOR TYPE TO BE USED. PLACE BLOCKOUTS AT ALL COLUMNS .

NOTE: ENLARGED BLOCKOUTS MAY BE REQUIRED AT BRACED FRAME LOCATIONS FOR GUSSET PLATE CLEARANCE.

C5 TYPICAL COLUMN BLOCKOUT
SCALE: NTS

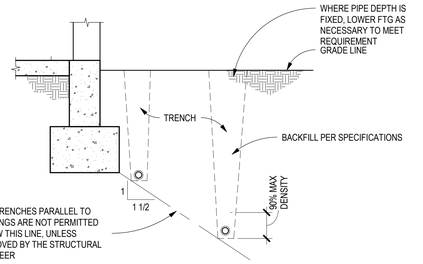

PIPE AND TRENCHES PARALLEL TO FOOTINGS

NOTES:
1. FOR PIPES MORES THAN 3' - 0" BELOW BOTTOM OF FTG USE COMPACTED FILL PER SPECIFICATIONS.
2. TRENCHES AND PIPES ARE NOT PERMITTED BELOW COLUMN FTGS

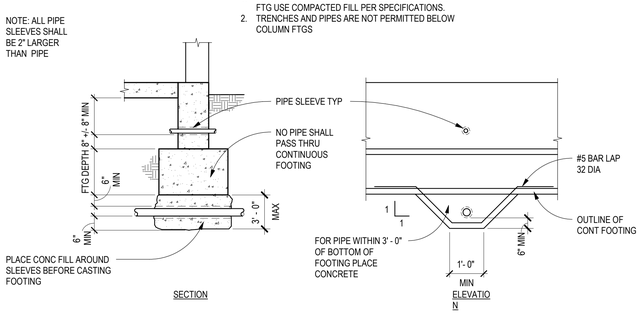

PIPE AND TRENCHES TRANSVERSE TO FOOTINGS

A1 TYPICAL PIPE PENETRATION AND TRENCH DETAILS
SCALE: NTS

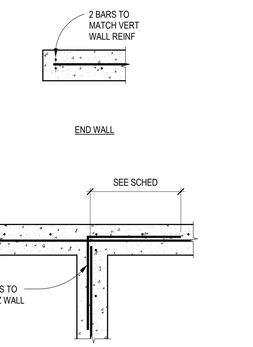

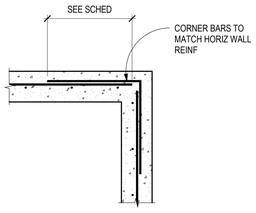

NOTE: REINFORCING SHOWN ON FOUNDATION SECTIONS AND SPECIFICALLY REFERENCED DETAILS SHALL TAKE GOVERN OVER REINFORCING IN STANDARD DETAILS.

A3 TYPICAL SINGLE MAT WALL REINF
SCALE: NTS

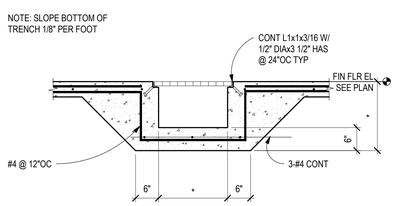

B4 TYPICAL TRENCH SECTION
SCALE: NTS

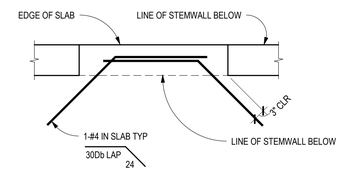

B5 TYPICAL SLAB REINF AT OPNG
SCALE: NTS

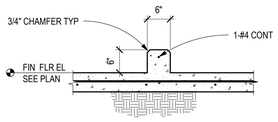

A4 TYPICAL CURB SECTION
SCALE: NTS

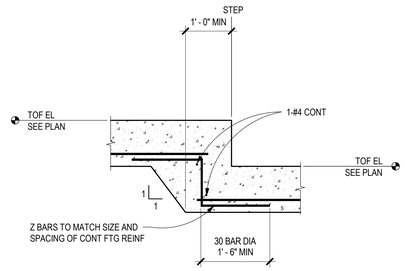

A5 TYPICAL STEPPED FOOTING DETAIL
SCALE: NTS

James R. Childers Architect, Inc.
45 South 4th Street
Fort Smith, AR 72901
479-783-2480
www.childersarchitect.com

PROFESSIONAL SEAL:
ARKANSAS REGISTERED PROFESSIONAL ENGINEER
CHRIS S. ROMERO
23576
11.01.19

CONSULTANT LOGO:
Chavez-Grieves consulting engineers, inc.
4700 Lincoln Road NE, Suite 102 Albuquerque, NM 87109
505-344-4080 505-343-8759 (fax)

CLIENT:
THE CHEROKEE NATION
FIRST CAPITAL
SEPT. 6, 1839

WILMA P. MANKILLER HEALTH CENTER EXPANSION
STILWELL, OKLAHOMA

KEY PLAN:

PROJECT PHASE:
BID PACKAGE 01

REVISIONS		
#	DATE	DESCRIPTION

DATE: 11-01-19
JOB NUMBER: 18-01.01
SHEET NUMBER: S7.11

TYPICAL CONCRETE DETAILS

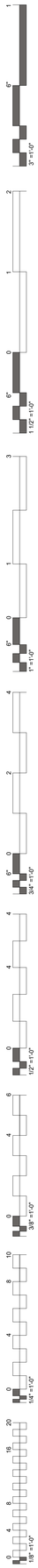

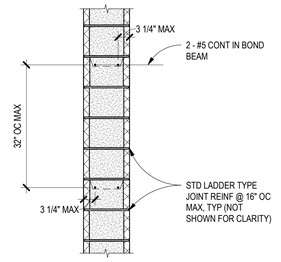

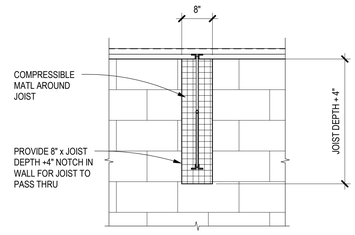

D4 TYPICAL BOND BEAM DETAIL

SCALE: 3/4" = 1'-0"

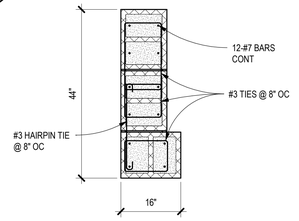

NOTES:
1. ALL PILASTER REINFORCING IS IN ADDITION TO REINFORCING SPECIFIED IN WALL SCHEDULE.
2. ALL REINFORCING SHALL BE CONTINUOUS ALONG ENTIRE HEIGHT OF WALL, UNLESS NOTED OTHERWISE.

PLAN VIEW

D5 TYPICAL JOIST THRU CMU WALL

SCALE: 3/4" = 1'-0"

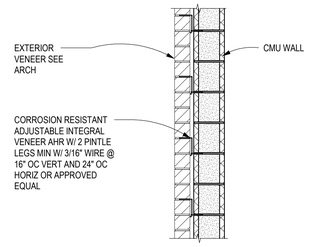

C4 PILASTER DETAIL

SCALE: 3/4" = 1'-0"

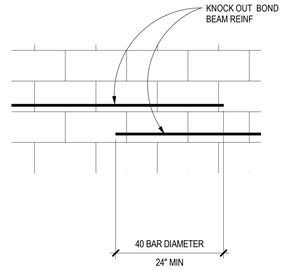

C5 TYPICAL VENEER TO CMU WALL DETAIL

SCALE: 3/4" = 1'-0"

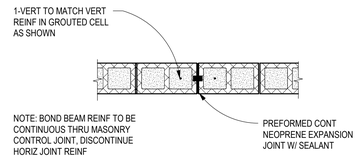

B4 TYPICAL STEP IN BOND BEAM

SCALE: 3/4" = 1'-0"

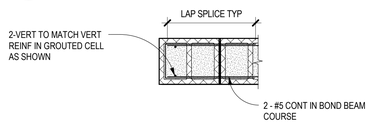

BOND BEAM AT WALL END

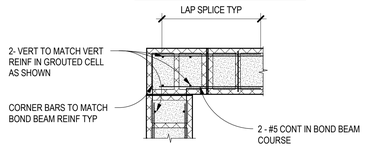

BOND BEAM AT WALL CORNER

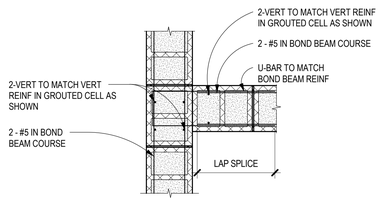

BOND BEAM AT WALL TEE

B5 TYPICAL CMU CNRTL JOINT (MCJ)

SCALE: 3/4" = 1'-0"

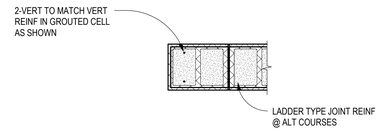

WALL END

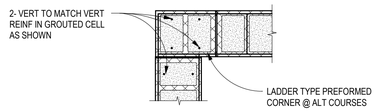

WALL CORNER

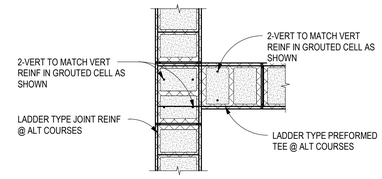

WALL TEE

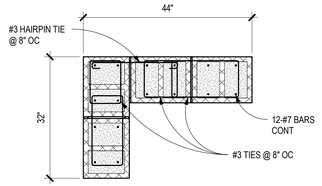

NOTES:
1. ALL PILASTER REINFORCING IS IN ADDITION TO REINFORCING SPECIFIED IN WALL SCHEDULE.
2. ALL REINFORCING SHALL BE CONTINUOUS ALONG ENTIRE HEIGHT OF WALL, UNLESS NOTED OTHERWISE.

PLAN VIEW

A3 PILASTER DETAIL

SCALE: 3/4" = 1'-0"

A4 TYPICAL 12" CMU PLAN DETAILS

SCALE: 3/4" = 1'-0"

A5 TYPICAL 12" CMU PLAN DETAILS

SCALE: 3/4" = 1'-0"

James R. Childers Architect, Inc.
45 South 4th Street
Fort Smith, AR 72901
479-783-2480
www.childersarchitect.com

PROFESSIONAL SEAL:

LICENSED PROFESSIONAL ENGINEER
CHRIS S. ROMERO
23576
OKLAHOMA
11.01.19

CONSULTANT LOGO:

Chavez-Grieves consulting engineers, inc.
4700 Lincoln Road NE, Suite 102 Albuquerque, NM 87109
505-344-4080 · 505-343-8759 (fax)

CLIENT:

THE CHEROKEE NATION
TRUST OF THE
SEPT. 6, 1839

WILMA P. MANKILLER HEALTH CENTER EXPANSION

STILWELL, OKLAHOMA

KEY PLAN:

PROJECT PHASE:
BID PACKAGE 01

REVISIONS

#	DATE	DESCRIPTION

DATE: 11-01-19
JOB NUMBER: 18-01.01
SHEET NUMBER: S7.21

TYPICAL MASONRY DETAILS



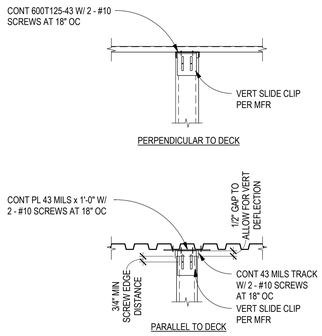

D4 TYPICAL SLIP TRACK ASSEMBLY
SCALE: NTS

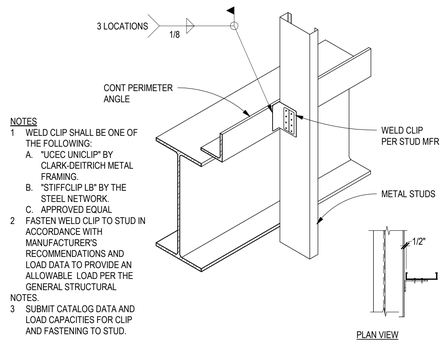

NOTES
1 WELD CLIP SHALL BE ONE OF THE FOLLOWING:
A. "UCEC UNICLIP" BY CLARK-DEITRICH METAL FRAMING.
B. "STIFFCLIP LB" BY THE STEEL NETWORK.
C. APPROVED EQUAL
2 FASTEN WELD CLIP TO STUD IN ACCORDANCE WITH MANUFACTURER'S RECOMMENDATIONS AND LOAD DATA TO PROVIDE AN ALLOWABLE LOAD PER THE GENERAL STRUCTURAL
NOTES.
3 SUBMIT CATALOG DATA AND LOAD CAPACITIES FOR CLIP AND FASTENING TO STUD.

D5 TYPICAL WELD CLIP
SCALE: NTS

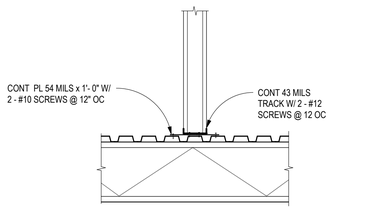

C4 TYPICAL STUD AT METAL DECK
SCALE: 3/4" = 1'-0"

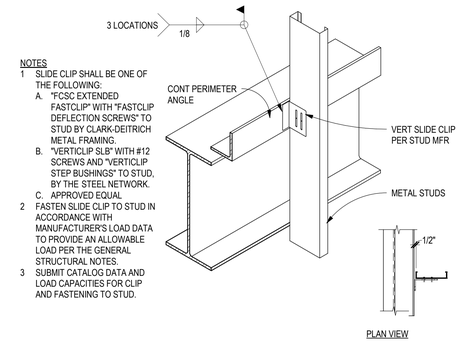

NOTES
1 SLIDE CLIP SHALL BE ONE OF THE FOLLOWING:
A. "FCSC EXTENDED FASTCLIP" WITH "FASTCLIP DEFLECTION SCREWS" TO STUD BY CLARK-DEITRICH METAL FRAMING.
B. "VERTICLIP SLB" WITH #12 SCREWS AND "VERTICLIP STEP BUSHINGS" TO STUD, BY THE STEEL NETWORK.
C. APPROVED EQUAL
2 FASTEN SLIDE CLIP TO STUD IN ACCORDANCE WITH MANUFACTURER'S LOAD DATA TO PROVIDE AN ALLOWABLE LOAD PER THE GENERAL STRUCTURAL NOTES.
3 SUBMIT CATALOG DATA AND LOAD CAPACITIES FOR CLIP AND FASTENING TO STUD.

C5 TYPICAL VERTICAL SLIDE CLIP
SCALE: NTS

VENEER LINTEL	
OPENING WIDTH	ANGLE
0' - 0" TO 2' - 0"	L5x3x1/4 LLH
2' - 1" TO 3' - 4"	L5x3x5/16 LLH
3' - 5" TO 4' - 0"	L5x3x3/8 LLH
4' - 1" TO 6' - 4"	L6x6x1/2
6' - 5" TO 8' - 0"	L6x6x1/2

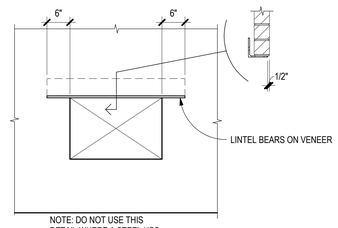

NOTE: DO NOT USE THIS DETAIL WHERE A STEEL HSS LINTEL AND SHELF ANGLE ARE SHOWN

B3 COLD-FORMED LINTEL SECTION @ VENEER
SCALE: 3/4" = 1'-0"

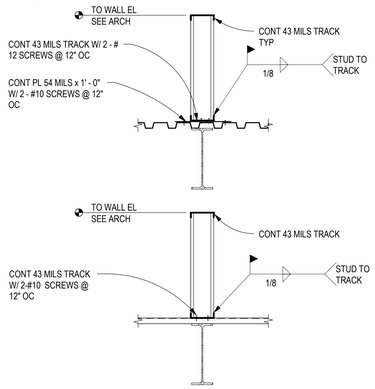

B4 TYPICAL PARAPET TO DECK
SCALE: 3/4" = 1'-0"

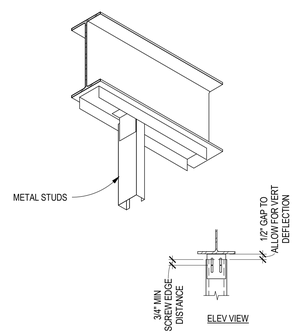

B5 TYPICAL SLIP TRACK ASSEMBLY
SCALE: NTS

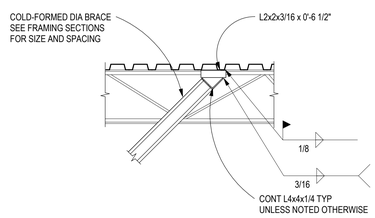

A3 TYPICAL DIAG BRACE TO DECK
SCALE: 3/4" = 1'-0"

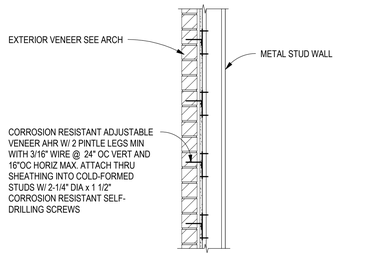

A4 TYPICAL VENEER ON MTL STUDS
SCALE: 3/4" = 1'-0"

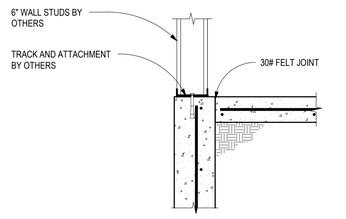

A5 TYPICAL STUDS AT STEMWALL
SCALE: 1" = 1'-0"

James R. Childers Architect, Inc.
45 South 4th Street
Fort Smith, AR 72901
479-783-2480
www.childersarchitect.com

PROFESSIONAL SEAL:
CHRIS S. ROMERO 23576 REGISTERED PROFESSIONAL ENGINEER
11.01.19

CONSULTANT LOGO:
Chavez-Grieves consulting engineers, inc.
4700 Lincoln Road NE, Suite 102 Albuquerque, NM 87109
505-344-4080 505-343-8759 (fax)

CLIENT:
THE CHEROKEE NATION FEAT OF 1839 SEPT. 6, 1839

WILMA P. MANKILLER HEALTH CENTER EXPANSION
STILWELL, OKLAHOMA

KEY PLAN:

PROJECT PHASE:
BID PACKAGE 01

REVISIONS		
#	DATE	DESCRIPTION

DATE: 11-01-19
JOB NUMBER: 18-01.01
SHEET NUMBER: S7.31

TYPICAL COLD-FORMED DETAILS

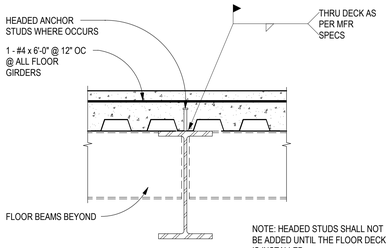

D1 TYPICAL FLOOR GIRDER
SCALE: 3/4" = 1'-0"

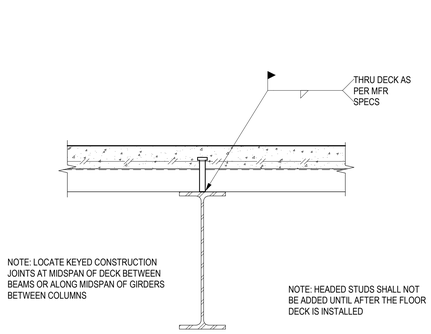

C1 TYPICAL COMPOSITE BEAM
SCALE: 1 1/2" = 1'-0"

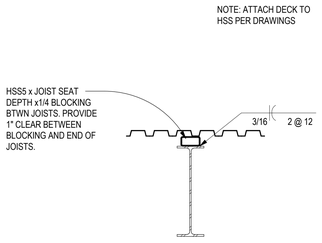

C2 TYPICAL HSS BLOCKING DETAIL
SCALE: 3/4" = 1'-0"

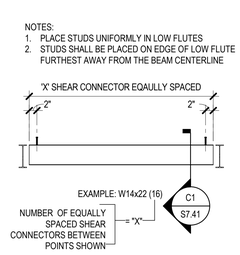

B1 TYPICAL COMPOSITE BEAM ELEV
SCALE: 1/4" = 1'-0"

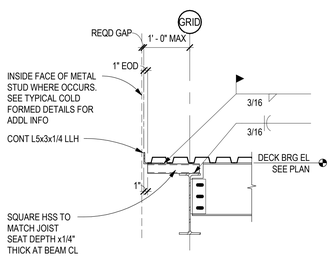

B2 TYPICAL DECK EDGE AT BEAM
SCALE: 3/4" = 1'-0"

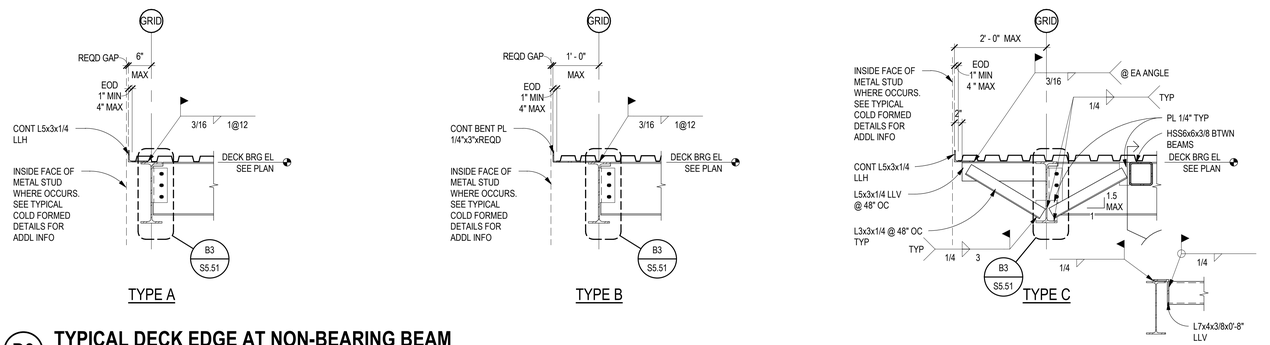

D3 TYPICAL DECK EDGE AT NON-BEARING BEAM
SCALE: 3/4" = 1'-0"

C2 TYPICAL ROOF BRG DECK EDGE
SCALE: 3/4" = 1'-0"

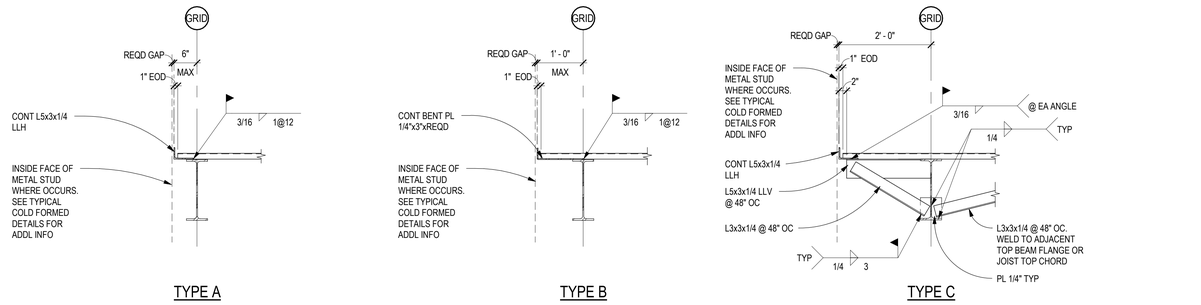

C3 TYPICAL DECK EDGE AT NON-BEARING
SCALE: 3/4" = 1'-0"

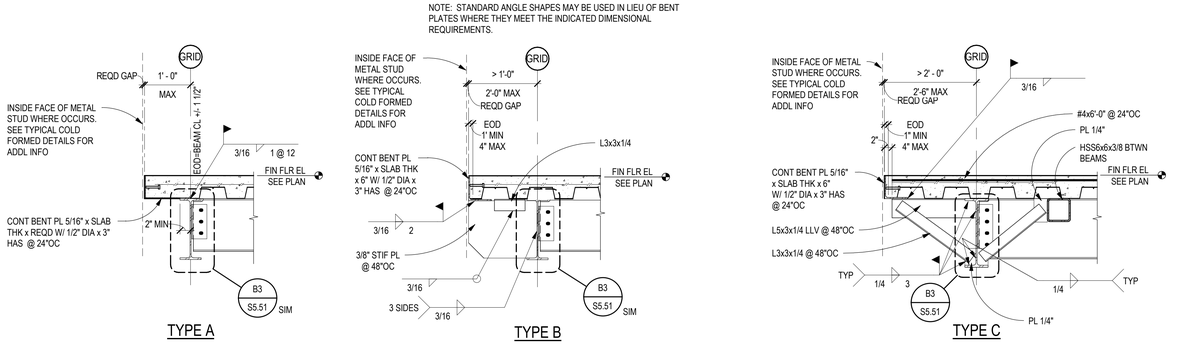

B3 TYPICAL SLAB EDGE AT BEARING CONDITION
SCALE: 3/4" = 1'-0"

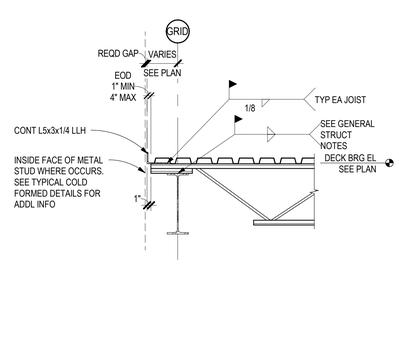

A1 TYPICAL COMPOSITE GIRDER ELEV
SCALE: 1/4" = 1'-0"

A2 TYPICAL ROOF BRG DECK EDGE
SCALE: 3/4" = 1'-0"

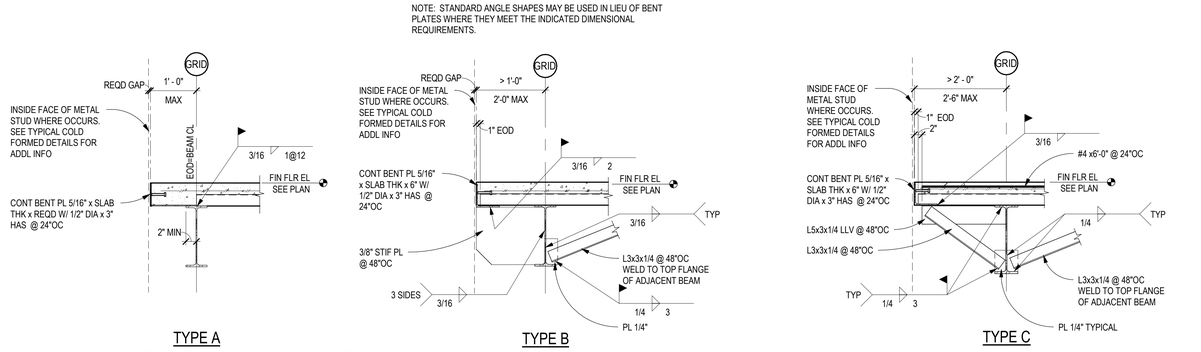

A3 TYPICAL SLAB EDGE AT NON-BEARING CONDITION
SCALE: 3/4" = 1'-0"

James R. Childers Architect, inc.
45 South 4th Street
Fort Smith, AR 72901
479-783-2480
www.childersarchitect.com

PROFESSIONAL SEAL:



CONSULTANT LOGO:

Chavez-Grieves
consulting engineers, inc.
4700 Lincoln Road NE, Suite 102 Albuquerque, NM 87109
505-344-4080 505-343-8759 (fax)

CLIENT:

THE CHEROKEE NATION
1839 TAHLEQUAH OKLA. SEPT. 6, 1839

WILMA P. MANKILLER HEALTH CENTER EXPANSION
STILWELL, OKLAHOMA

KEY PLAN:

PROJECT PHASE:
BID PACKAGE 01

REVISIONS		
#	DATE	DESCRIPTION

DATE: 11-01-19
JOB NUMBER: 18-01.01
SHEET NUMBER: S7.41

TYPICAL STEEL DETAILS

NOTE: INSTALL OPENINGS IN
COMPLIANCE WITH OSHA REQUIREMENTS
INCLUDING 1926.754 OF 29 CFR

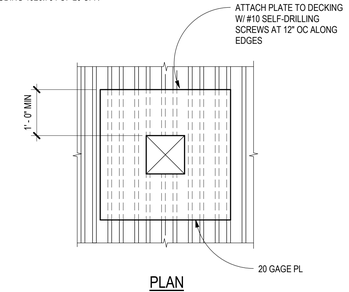

PLAN

D5 TYPICAL ROOF OPENING 0"-12"

SCALE: 3/4" = 1'-0"

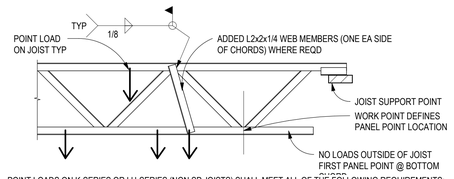

POINT LOADS ON K-SERIES OR LH-SERIES (NON SP JOISTS) SHALL MEET ALL OF THE FOLLOWING REQUIREMENTS:

- POINT LOADS ON THE JOIST TOP CHORD OR BOTTOM CHORD THAT EXCEED 100LBS SHALL BE PLACED WITHIN 4" OF A JOIST PANEL POINT, OR ADDITIONAL WEB MEMBERS SHALL BE ADDED AT THE POINT OF LOAD APPLICATION.
- WHERE MULTIPLE POINT LOADS ARE PLACED BETWEEN THE SAME TWO PANEL POINTS, THE SUM OF THOSE LOADS THAT ARE NOT REINFORCED WITH ADDITIONAL WEB MEMBERS SHALL NOT EXCEED100LBS.
- POINT LOADS SHALL BE CONCENTRIC WITH THE CHORD FROM WHICH IT IS HUNG. BEAM CLAMPS OR OTHER CONNECTIONS THAT INDUCE NON-CONCENTRIC LOADS ARE NOT PERMITTED.
- POINT LOADS SHALL BE SPACED SO THAT THE COMBINED TOP CHORD PLUS BOTTOM CHORD POINT LOADS DO NOT EXCEED AN EQUIVALENT LINE LOAD OF 65PLF AT ANY POINT ALONG THE JOIST.
- LOADS SHALL NOT BE PLACED ON THE BOTTOM CHORD OUTSIDE OF THE FIRST PANEL POINT.
- POINT LOADS IN EXCESS OF 350LBS THAT ARE NOT SPECIFICALLY NOTED ON THE STRUCTURAL DRAWINGS SHALL NOT BE PLACED WITHOUT APPROVAL FROM THE ENGINEER OF RECORD AND THE JOIST MANUFACTURER.

NOTE: JOISTS LABELED AS "SP" HAVE BEEN DESIGNED FOR THE LOADS NOTED ON THE STRUCTURAL PLANS. THOSE LOADS SHALL BE PLACED WITHIN 2" OF A PANEL POINT, OR ADDITIONAL WEB MEMBERS SHALL BE ADDED.

C4 TYPICAL JOIST REINFORCING

SCALE: 1/2" = 1'-0"

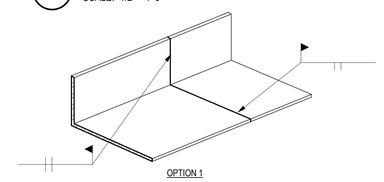

OPTION 1

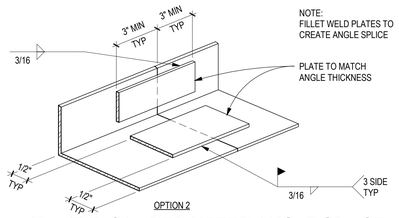

OPTION 2

B4 TYPICAL PERIMETER ANGLE SPLICE

SCALE: 3/4" = 1'-0"

NOTE: INSTALL OPNGS IN
COMPLIANCE WITH OSHA
REQUIREMENTS INCLUDING
1926.754 OF 29 CFR

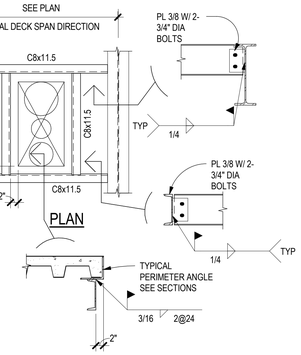

PLAN

C5 TYPICAL SLAB OPNG > 24"

SCALE: 3/4" = 1'-0"

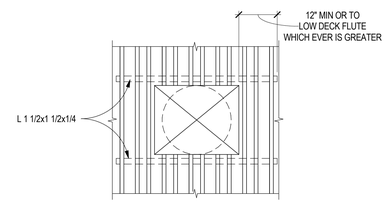

PLAN

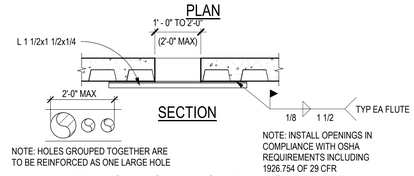

SECTION

NOTE: HOLES GROUPED TOGETHER ARE
TO BE REINFORCED AS ONE LARGE HOLE

NOTE: INSTALL OPENINGS IN
COMPLIANCE WITH OSHA
REQUIREMENTS INCLUDING
1926.754 OF 29 CFR

B5 TYPICAL SLAB OPENING 12"-24"

SCALE: 3/4" = 1'-0"

NOTE: INSTALL OPENINGS IN
COMPLIANCE WITH OSHA REQUIREMENTS
INCLUDING 1926.754 OF 29 CFR

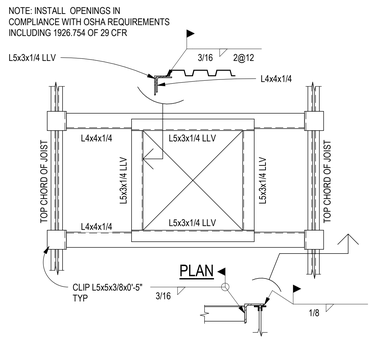

PLAN

A4 TYPICAL ROOF OPENING > 12"

SCALE: 3/4" = 1'-0"

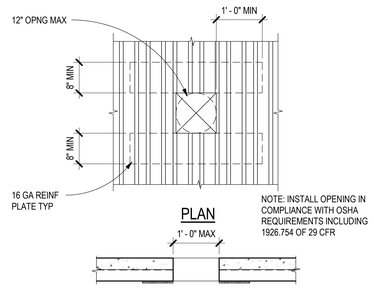

PLAN

NOTE: INSTALL OPENING IN
COMPLIANCE WITH OSHA
REQUIREMENTS INCLUDING
1926.754 OF 29 CFR

SECTION

NOTE: FOR OPNGS LESS THAN 4"
NO REINFORCING PLATE REQD

A5 TYPICAL SLAB OPENING 4"-12"

SCALE: 3/4" = 1'-0"

James R. Childers
Architect, Inc.
45 South 4th Street
Fort Smith, AR 72901
479-783-2480
www.childersarchitect.com

PROFESSIONAL SEAL:



CONSULTANT LOGO:

Chavez-Grieves
consulting engineers, inc.
4700 Lincoln Road NE, Suite 102 Albuquerque, NM 87109
505-344-4080 505-343-8759 (fax)

CLIENT:

THE CHEROKEE NATION
TAHLEQUAH
SEPT. 6, 1839

WILMA P. MANKILLER HEALTH CENTER EXPANSION

STILWELL, OKLAHOMA

KEY PLAN:

PROJECT PHASE:

BID PACKAGE 01

REVISIONS		
#	DATE	DESCRIPTION

DATE:	JOB NUMBER:
11-01-19	18-01.01

SHEET NUMBER:

S7.42

TYPICAL STEEL
DETAILS

PROJECT SPECIFIC INFORMATION

PROJECT NUMBER:	**18250**
SUBMITTAL NUMBER:	S-02
SUBMITTAL DATE:	10/28/2019
PROJECT NAME:	STILWELL HEALTH CLINIC
LOCATION:	STILWELL, OK
CONNECTION TYPE:	SIDEPLATE
NUMBER OF BUILDINGS:	1
APPROX. TOTAL GROSS SQUARE FOOTAGE:	104714
NUMBER OF STORIES:	2

eDATA:

a. THERE MAY BE eDATA AVAILABLE FOR YOUR PROJECT WHICH IS AVAILABLE FOR DOWNLOAD AT WWW.SIDEPLATE.COM. eDATA MAY INCLUDE:
   - eSTIMATE FILE IN EXCEL FORMAT FOR USE IN AFFIRMING SIDEPLATE CONNECTION MATERIAL QUANTITIES.
   - ComponentXML FILE FOR USE IN ASSISTING DETAILING EFFORTS.

b. ESTIMATED NUMBER OF SIDEPLATE JOINTS FOR THIS PROJECT = 54
c. ESTIMATED NUMBER OF SIDEPLATE JOINTS FOR THIS PROJECT THAT ARE **NOT** SUPPORTED BY eDATA = 6
d. MISCELLANEOUS DETAILS, TYPICALLY DESIGNATED BY M#, ARE NOT SUPPORTED.

INSTRUCTIONS TO STEEL FABRICATOR

1. SIDEPLATE LICENSE FEE:
   a. THE STEEL FABRICATOR'S BID PRICE FOR PROCUREMENT, FABRICATION AND ERECTION OF STRUCTURAL AND MISCELLANEOUS STEEL SHALL INCLUDE THE SIDEPLATE LICENSE FEE FOR THE PROJECT. EACH PROSPECTIVE STEEL FABRICATOR WHO BIDS THE PROJECT SHALL FORMALLY REQUEST THE SIDEPLATE LICENSE FEE BY ACCESSING THE SIDEPLATE WEBSITE (http://www.sideplate.com).
   b. UPON THE SUCCESSFUL STEEL FABRICATOR SIGNING A CONTRACT TO FABRICATE STRUCTURAL STEEL FOR THIS PROJECT, THE STEEL FABRICATOR SHALL SUBMIT A PURCHASE ORDER (PO) TO SIDEPLATE SYSTEMS, INC. FOR THE TOTAL AMOUNT OF THE SIDEPLATE LICENSE FEE AND SHALL INCLUDE SAID FEE IN ITS FIRST CONSTRUCTION DRAW.
   c. THE STEEL FABRICATOR SHALL MAKE PAYMENT OF THE SIDEPLATE LICENSE FEE DIRECTLY TO:

      SIDEPLATE SYSTEMS, INC.
      25909 PALA, SUITE 200
      MISSION VIEJO, CA 92691
      TEL: 949-238-8900

SUBMITTALS

1. IN ADDITION TO THE REQUIRED SUBMITTALS SPECIFIED BY THE BALANCE OF THE CONTRACT DOCUMENTS, THE FOLLOWING SUBMITTALS SHALL BE SENT TO SIDEPLATE SYSTEMS, INC. ELECTRONICALLY VIA THE STRUCTURAL ENGINEER OF RECORD FOR THEIR REVIEW AND DISPOSITION:
   a. QUALITY CONTROL PROGRAM (REQUIRED IF NOT AISC CERTIFIED)
   b. ONE ELECTRONIC COPY OF ALL STRUCTURAL STEEL DRAWINGS THAT EITHER DIRECTLY PERTAINS TO AND/OR AFFECTS THE SHOP FABRICATION OR FIELD ERECTION OF THE SIDEPLATE STEEL FRAME CONNECTION SYSTEM, INCLUDING THE INITIAL SUBMITTAL AND ALL CORRECTED RE-SUBMITTALS OF AFFECTED DRAWINGS. SIDEPLATE SYSTEMS, INC. SHALL BE GIVEN, AS A MINIMUM, THE SAME SPECIFIED REVIEW TIME (NOT LESS THAN SEVEN BUSINESS DAYS) AS THE ENGINEER OF RECORD.

MEETINGS

1. PRE-DETAILING MEETING
   a. PRIOR TO THE START OF DETAILING OF THE SHOP DRAWINGS, THE FABRICATION CONTRACTOR SHALL FORMALLY REQUEST A PRE-DETAILING MEETING FROM SIDEPLATE SYSTEMS, INC. THIS MEETING IS TYPICALLY A WEBINAR TO DISCUSS BEST PRACTICES FOR THE DETAILING OF THE SIDEPLATE CONNECTIONS, AND TO CREATE A PROACTIVE FORUM TO ANSWER ANY QUESTIONS.
2. PRE-FABRICATION MEETING
   a. PRIOR TO THE START OF FABRICATION, THE FABRICATION CONTRACTOR SHALL FORMALLY REQUEST A PRE-FABRICATION MEETING FROM SIDEPLATE SYSTEMS, INC. THIS MEETING IS TYPICALLY A WEBINAR TO DISCUSS BEST PRACTICES FOR THE FABRICATION OF THE SIDEPLATE CONNECTIONS, AND TO CREATE A PROACTIVE FORUM TO ANSWER ANY QUESTIONS.
3. PRE-ERECTION MEETING
   a. PRIOR TO THE START OF STEEL ERECTION, THE ERECTION CONTRACTOR SHALL FORMALLY REQUEST A PRE-ERECTION MEETING FROM SIDEPLATE SYSTEMS, INC. THIS MEETING IS TYPICALLY A WEBINAR TO DISCUSS BEST PRACTICES FOR FIELD ERECTION OF THE SIDEPLATE BEAMS AND COLUMNS, AND TO CREATE A PROACTIVE FORUM TO ANSWER ANY QUESTIONS.

GENERAL

1. THE GOVERNING CODES SHALL CONSIST OF ANSI/AWS D1.1-2010 (AWS D1.1), AISC CODE OF STANDARD PRACTICE FOR STEEL BUILDINGS AND BRIDGES (APRIL 14, 2010), 2009 RCSC SPECIFICATIONS FOR STRUCTURAL JOINTS USING HIGH-STRENGTH BOLTS, AND ALL APPLICABLE BUILDING AND JURISDICTIONAL CODES AND PROJECT STANDARDS SPECIFIED IN THE PROJECT SPECIFICATION STRUCTURAL STEEL SECTION. WHERE THE REQUIREMENTS DIFFER BETWEEN SIDEPLATE CONNECTION NOTES, THE GENERAL STRUCTURAL NOTES, AND THE GOVERNING CODES, THE MORE STRINGENT SECTION CRITERIA SHALL CONTROL.
2. ALPHA AND NUMERIC DESIGNATORS {X} & {#} USED HEREIN TO SIMPLIFY THE IDENTIFICATION OF PLATES, ANGLES, AND WELDS ARE DEFINED BELOW:

{A}	SIDE PLATE FOR UNIAXIAL CONNECTIONS
{B}	BEAM FLANGE COVER PLATE, AS REQUIRED
{C}	VERTICAL SHEAR PLATE OR FLAT BAR, AS REQUIRED
{D}	HORIZONTAL SHEAR PLATE OR FLAT BAR, AS REQUIRED
{E}	VERTICAL ANGLE WELDED TO THE VERTICAL SHEAR PLATE {C}, AS REQUIRED
{F}	VERTICAL SHEAR ELEMENT (VSE) WHICH CONSISTS OF PLATE {C} AND ANGLE {E} MATERIAL, AS REQUIRED
{G}	LONGITUDINAL ANGLE WELDED TO THE OUTSIDE FACE OF SIDE PLATE {A}, AS REQUIRED
{H}	LONGITUDINAL ANGLE WELDED TO THE BOTTOM BEAM FLANGE (OR TOP BEAM FLANGE AS REQUIRED)
{T}	HORIZONTAL PLATE WELDED TO THE OUTSIDE FACE OF SIDE PLATE {A}, AS REQUIRED
{1}	FILLET WELD CONNECTING SIDE PLATE {A} TO HORIZONTAL SHEAR PLATE {D} OR COLUMN
{2}	FILLET (AND/OR FLARE BEVEL) WELD CONNECTING INSIDE FACE OF SIDE PLATE {A} TO COLUMN
{3}	FILLET WELD CONNECTING HORIZONTAL SHEAR PLATE {D} TO COLUMN, AS REQUIRED
{4}	FILLET WELD TO CONSTRUCT VSE {F} AND TO CONNECT IT TO THE WEB OF THE BEAM, AS REQUIRED
{5}	FILLET (AND/OR PJP) WELD CONNECTING BEAM FLANGE TIPS TO COVER PLATE {B} AND/OR LONGITUDINAL ANGLE {H}, AS REQUIRED
{5a}	FILLET WELD CONNECTING OUTSIDE FACE OF BEAM FLANGE TO COVER PLATE {B} AND/OR LONGITUDINAL ANGLE {H}, AS REQUIRED
{5b}	FILLET WELD CONNECTING COVER PLATE {B} EDGE TO TOP FACE OF BEAM FLANGE, ACROSS ITS WIDTH
({5p})	PJP WELD CONNECTING ANGLE {H} TO BEVELED BEAM FLANGE
{8}	FILLET (AND/OR PJP) WELD CONNECTING LONGITUDINAL ANGLE {G} (AND/OR PLATE {T}) TO SIDE PLATE {A}, AS REQUIRED
({8p})	PJP WELD CONNECTING PLATE {T} TO SIDE PLATE {A} AND/OR CONNECTING BUILT UP ANGLE {H} PLATES TOGETHER, AS REQUIRED
{9}	FILLET WELD CONNECTING SIDE PLATE {A} TO COLUMN FACE, WRAPPED AROUND THREE SIDES OF SIDE PLATE {A}
{10}	FILLET WELD TO CONSTRUCT SIDE PLATE SLOTTED INTERLOCK ASSEMBLY
{10p}	PJP WELD TO CONSTRUCT SIDE PLATE SLOTTED INTERLOCK ASSEMBLY
{10r}	REINFORCING FILLET WELD TO CONSTRUCT SIDE PLATE SLOTTED INTERLOCK ASSEMBLY

3. ALPHA DESIGNATORS, USED HEREIN TO SIMPLIFY THE IDENTIFICATION OF DIMENSIONS OF THE SIDEPLATE CONNECTIONS, ARE DEFINED BELOW:

GAP	PHYSICAL SEPARATION BETWEEN THE END OF THE MOMENT FRAME BEAM AND THE ADJOINING FACE OF THE COLUMN FLANGE
B	DEPTH OF SIDE PLATE {A}
C	LENGTH OF COVER PLATE {B} AND/OR LONGITUDINAL ANGLE {H}
D	LENGTH OF SLOT FROM THE TOE OF THE RADIUS IN THE COVER PLATE {B}, AS REQUIRED
E	EDGE DISTANCE OF BOLT HOLES IN COVER PLATE {B}, AS REQUIRED
G	GAGE DISTANCE TO CENTERLINE OF BOLT HOLES IN ANGLES {G} AND {H}, AND PLATE {T}, AS REQUIRED
H	ADDED DIMENSION TO COLUMN FLANGE WIDTH TO DEFINE TOTAL COVER PLATE {B} WIDTH
J	DISTANCE FROM END OF THE BEAM TO CENTERLINE OF VERTICAL BOLT HOLES IN VSE {F}, AS REQUIRED
R	RADIUS OF SLOT DIMENSION IN COVER PLATE {B}
S	HORIZONTAL SPACING BETWEEN BOLT HOLES
Y	ADDED DIMENSION TO COLUMN FLANGE WIDTH FOR ALLOWABLE SPREAD OF SIDE PLATES {A}

MATERIAL

1. PLATE, FLAT BAR, AND ANGLE MATERIAL:
   a. ALL PLATE MATERIAL SHALL HAVE A MINIMUM YIELD STRENGTH (F_y) OF 50 KSI.
   b. ANGLE AND BAR MATERIAL SHALL HAVE A HIGH STRENGTH STEEL SPECIFICATION AND SHALL HAVE A MINIMUM YIELD STRENGTH (F_y) OF 50 KSI.
2. HIGH STRENGTH BOLTS/FASTENERS:
   a. BOLTS SHALL BE TYPE 1 OR TYPE 3 AND SHALL BE A490-X HEAVY HEX, F2280 TWIST-OFF-TYPE TENSION-CONTROL BOLT ASSEMBLIES, OR F3148 FIXED SPLINE BOLT ASSEMBLIES. THE BOLT HEAD SHALL BE DISTINCTIVELY MARKED WITH A MINIMUM MARKING OF A490, A490TC, OR 144 RESPECTIVELY. AN ALTERNATIVE DESIGN THAT MEETS THE REQUIREMENTS OF RCSC SECTION 2.8 MAY BE USED, WITH THE WRITTEN APPROVAL FROM SIDEPLATE SYSTEMS, INC.
   b. WASHERS SHALL BE ORDINARY THICKNESS AND ASTM F436 TYPE 1 OR TYPE 3.
   c. NUTS SHALL BE ASTM A563 GRADE DH OR DH3.
   d. THE BOLT ASSEMBLY SHALL BE COVERED IN A LIGHT PROTECTIVE OIL. F2280 AND F3148 ASSEMBLIES SHALL ONLY BE LUBRICATED BY THE SUPPLIER.
   e. THE MILL TEST REPORT (MTR) MUST HAVE DOCUMENTED LOT TRACEABILITY, STATEMENT OF DIMENSIONAL RESULTS, FULL CHEMICAL AND MECHANICAL TEST RESULTS TO THE SPECIFICATIONS ABOVE.
   f. THE USE OF FINGER SHIMS ARE ACCEPTABLE PER BOLTING SECTION 8.
3. ROLLED SHAPES:
   a. ALL ROLLED SHAPES USED FOR COLUMNS AND BEAMS IN CONSTRUCTING SIDEPLATE MOMENT FRAMES SHALL BE ASTM A992 GRADE 50 UNO.
4. HSS TUBE SHAPES:
   a. ALL HSS SHAPES USED FOR COLUMNS AND BEAMS IN CONSTRUCTING SIDEPLATE MOMENT FRAMES SHALL, AS A MINIMUM, BE ASTM A500 GRADE B OR GRADE C OR ASTM1085.

PREPARATION

1. THE STEEL FABRICATION AND ERECTION SUBCONTRACTORS SHALL EMPLOY A DISTORTION CONTROL PROGRAM PRIOR TO THE START OF SIDEPLATE MOMENT FRAME FABRICATION. THE DISTORTION CONTROL PROGRAM SHALL BE IN ACCORDANCE WITH THE PROVISIONS OF AWS D1.1 SECTION 5.21 AND 5.22 TO ENSURE THAT THE FOLLOWING ARE MAINTAINED:
   - DIMENSIONAL ACCURACY
   - FRAMING AND ALIGNMENT TOLERANCES
   - COMPLIANCE WITH AISC CODE OF STANDARD PRACTICE FOR STEEL BUILDINGS AND BRIDGES, SECTION 7.0, ERECTION PROVISIONS
   - CONTROL OF DISTORTION AND WELD SHRINKAGE

WELDING

1. WELDER QUALIFICATION: THE PERFORMANCE OF ALL WELDERS, WELDING OPERATORS AND TACK WELDERS SHALL BE QUALIFIED IN CONFORMANCE WITH AWS D1.1, SECTION 4, PART C TO DEMONSTRATE ABILITY TO PRODUCE SOUND WELDS.

BOLTING

1. BOLTS/FASTENERS SHALL BE INSTALLED TO PRETENSIONED CONDITION USING ONE OF THE METHODS PRESCRIBED HERE: TURN-OF-NUT (A490), CALIBRATED WRENCH (A490), TWIST-OFF-TYPE TENSION-CONTROL BOLT (F2280), OR TORQUE AND ANGLE METHOD(F3148).
2. FOR ALL PRETENSIONING METHODOLOGIES, ALL FASTENER ASSEMBLIES WITHIN THE JOINT SHALL FIRST BE BROUGHT TO A SNUG TIGHT CONDITION, FOLLOWED BY A SYSTEMATIC PRETENSIONING PROCESS. PRETENSIONING SHALL BEGIN AT THE MOST RIGID PART OF THE JOINT AND CONTINUE IN A MANNER THAT WILL MINIMIZE THE RELAXATION OF PREVIOUSLY PRETENSIONED FASTENERS, UNTIL THE CONNECTED PLIES ARE IN AS FIRM CONTACT AS POSSIBLE.
3. REUSE OF A490, F2280, AND F3148 BOLT ASSEMBLIES SHALL NOT BE ALLOWED. TOUCHING UP OR RE-TIGHTENING BOLTS THAT MAY HAVE BEEN LOOSENED BY THE INSTALLATION OF ADJACENT BOLTS SHALL NOT BE CONSIDERED TO BE A REUSE.
4. ALL BOLT HOLES SHALL BE ALIGNED TO PERMIT INSERTION OF THE BOLTS WITHOUT UNDUE DAMAGE TO THE THREADS.
5. THE BOLT LENGTH USED SHALL BE SUCH THAT THE BOLT THREAD EXTENDS BEYOND OR IS AT LEAST FLUSH WITH THE OUTER FACE OF THE NUT WHEN PROPERLY INSTALLED.
6. FASTENER COMPONENTS SHALL BE PROTECTED FROM DIRT AND MOISTURE IN CLOSED CONTAINERS AT THE SITE OF INSTALLATION.
7. F2280 OR F3148 ASSEMBLIES AND ALTERNATIVE DESIGN FASTENERS THAT MEET THE SPECIFIED REQUIREMENTS PREVIOUSLY MENTIONED SHALL NOT BE RE-LUBRICATED, EXCEPT BY THE MANUFACTURER.
8. FINGER SHIMS MAY BE USED UP TO 1/4 INCH WITHOUT RESTRICTION, SHIM REQUIREMENTS GREATER THAN 1/4 INCH SHALL BE SUBMITTED TO SIDEPLATE SYSTEMS INC FOR APPROVAL PRIOR TO USE.
9. WASHERS SHALL BE ASTM F436 ORDINARY THICKNESS AND SHALL BE USED UNDER THE NUT OF THE FASTENER ASSEMBLY SO AS TO PROVIDE A HARDENED NON-GALLING SURFACE OF THE TURNED ELEMENT. WHEN USING THE TURN-OF-NUT OR CALIBRATED WRENCH METHOD, THE TURNED ELEMENT MUST BE THE SAME AS WAS USED WHEN PERFORMING PREINSTALLATION VERIFICATION TESTING.

QUALITY CONTROL

1. THE FABRICATOR AND ERECTOR SHALL BE RESPONSIBLE FOR QUALITY CONTROL BY PROVIDING, AS A MINIMUM, IN-PROCESS VISUAL INSPECTION OF ALL FABRICATION AND ERECTION ACTIVITIES TO ENSURE THAT MATERIALS AND WORKMANSHIP MEET THE REQUIREMENTS OF THE CONTRACT DOCUMENTS, AND SHALL INCLUDE WORK PERFORMED PRIOR TO ASSEMBLY. SUCH WORK SHALL INCLUDE, BUT NOT BE LIMITED TO, VERIFYING THAT EFFECTIVE PROCEDURES AND METHODS HAVE BEEN EMPLOYED IN THE FORM OF A DISTORTION CONTROL PROGRAM TO ACCOUNT FOR AND COUNTERACT THE EFFECTS OF WELD SHRINKAGE, EXISTING BEAM SWEEP AND CAMBER, AND CHANGES IN MOMENT FRAME GEOMETRY DUE TO SKEWED AND CURVED DESIGN CONFIGURATIONS (AS OCCURS), TO ENSURE COMPLIANCE WITH SPECIFIED ERECTION AND ALIGNMENT TOLERANCES. QC INSPECTION SHALL INCLUDE **HOLD POINTS** FOR THE FOLLOWING:
   a. COLUMN TREE ASSEMBLY
      1. VERIFICATION THAT ACTUAL COLUMN FLANGE WIDTH IS AT LEAST NOMINAL COLUMN FLANGE WIDTH WHERE THE SIDE PLATES {A} ARE TO BE INSTALLED. IN THE UNLIKELY EVENT ACTUAL COLUMN FLANGE WIDTH IS LESS THAN NOMINAL, BUT WITHIN AISC STANDARD MILL TOLERANCES (-3/16 INCH MAX), CONTACT SIDEPLATE SYSTEMS, INC FOR APPROPRIATE RECOMMENDATIONS.
      2. MINIMUM CLEAR DIMENSION SHALL BE VERIFIED AFTER PLACEMENT OF WELD {2}, COOLING OF WELD {2}, AND REMOVAL OF TEMPORARY SHOP CONSTRUCTION AID(S). VERIFY THAT A MINIMUM ACTUAL COLUMN FLANGE WIDTH DIMENSION OCCURS ANYWHERE IN BETWEEN THE SIDE PLATES {A} FROM TOP TO BOTTOM. THE SIDE PLATES SHALL BE PARALLEL TO ONE ANOTHER. IN NO CASE SHALL THEY BE LESS THAN THE ACTUAL COLUMN FLANGE WIDTH.
      3. MAXIMUM SPREAD DIMENSION OF SIDE PLATE {A} SHALL NOT EXCEED ACTUAL COLUMN FLANGE WIDTH PLUS THE SCHEDULED SPREAD DIMENSION Y. THE FIELD CONSTRUCTION AID SHALL BE PLACED AND HOLD THE SIDE PLATES IN THIS FLARED CONDITION UNTIL THE BEAM HAS BEEN PERMANENTLY CONNECTED. IN NO CASE SHALL THE SPREAD CAUSE PERMANENT DEFORMATION IN THE SIDE PLATES.
      4. VERIFICATION OF BOLT HOLE ELEVATION AND SPACING FOR POSITION OF SIDE PLATE {A} AND PROPER POSITION AND ELEVATION OF ANGLES {G}.
   b. BEAM ASSEMBLY
      1. VERIFICATION OF PERPENDICULAR ALIGNMENT BETWEEN THE TOP COVER PLATE {B} AND BOTTOM ANGLES {H} TO THE WEB OF THE BEAM, TO MINIMIZE, IF NOT ELIMINATE, ANY MISALIGNMENT OF BOLT HOLES DUE TO BEAM FLANGE TILT WHEN THE BEAM HAS BEEN LOWERED INTO PLACE.
      2. VERIFICATION OF BOLT HOLE SPACING AND POSITION ON COVER PLATE {B} AND ANGLES {H}. CONSIDERATION SHALL BE GIVEN TO THE CUPPING EFFECT OF THE TOP COVER PLATE {B}, DUE TO WELD SHRINKAGE.
      3. VERIFICATION OF THE DISTANCE BETWEEN EXTERIOR ANGLE {H} FACES AND THEIR RESPECTIVE BOLT HOLE PLACEMENT TO EACH OTHER (VERTICALLY AND HORIZONTALLY).
      4. VERIFICATION THAT IN NO CASE SHALL THE OUTSIDE FACE OF VSE {F} EXTEND BEYOND THE OUTSIDE FACES OF THE LONGITUDINAL ANGLES {H}.
      5. VERIFICATION THAT VERTICAL PLACEMENT OF VSE {F} IS IN THE CORRECT LOCATION.
2. FILLET WELD FIT-UP TOLERANCES:
   a. THE PARTS TO BE JOINED BY FILLET WELDS SHALL BE BROUGHT INTO AS CLOSE CONTACT AS PRACTICABLE, USING AS NECESSARY SUITABLE CLAMPING MEANS. THE ROOT OPENING (I.E., THE FIT-UP GAP) SHALL NOT EXCEED 1/4 INCH. FOR FILLET WELD ROOT GAPS GREATER THAN 1/16 INCH, THE LEG SIZE (I.E., THE SPECIFIED SIZE) OF FILLET WELD SHALL BE INCREASED BY THE AMOUNT OF THE ROOT OPENING.
3. THERMAL CUTTING:
   a. THE ROUGHNESS OF ALL THERMAL-CUT SURFACES SHALL BE NO GREATER THAN AN ANSI SURFACE ROUGHNESS VALUE OF 1000 MICRO-INCHES. ROUGHNESS EXCEEDING THIS VALUE AND NOTCHES OR GOUGES NOT MORE THAN 3/16 INCH DEEP SHALL BE REMOVED BY MACHINING OR GRINDING. NOTCHES OR GOUGES IN THE THERMALLY CUT EDGES DEEPER THAN 3/16 INCH SHALL BE REPAIRED PER AWS.
4. TENSION CALIBRATION FOR PRE-INSTALLATION:
   a. TENSION CALIBRATION SHALL BE USED TO CONFIRM THE SUITABILITY OF THE COMPLETE FASTENER ASSEMBLY, AND THE PROCEDURE TO BE USED BY THE BOLTING CREW.

QUALITY ASSURANCE

IN ADDITION TO ALL OTHER QUALITY ASSURANCE INSPECTION ACTIVITIES, THE OWNER'S VERIFICATION INSPECTOR SHALL BE RESPONSIBLE FOR:

1. WELDING:
   a. TO ASSURE THE PROPER AMPERAGE AND VOLTAGE OF THE WELDING PROCESS, THE USE OF HAND HELD CALIBRATED AMP AND VOLT METERS SHALL BE USED. THIS EQUIPMENT SHALL BE USED BY THE FABRICATOR AND THE INSPECTOR. AMPERAGE AND VOLTAGE SHALL BE MEASURED NEAR THE ARC. TRAVEL SPEED AND ELECTRODE STICK OUT SHALL BE VERIFIED TO BE IN COMPLIANCE WITH THE APPROVED WPS.
   b. VISUAL INSPECTION SHALL BE PERFORMED ON ALL SHOP WELDS.
   c. EACH WELDER EMPLOYED ON THE PROJECT SHALL UNDERSTAND ALL THE REQUIREMENTS OF THE WELDING PROCEDURE SPECIFICATION(S) BEFORE WELDING ON THE PROJECT.
   d. AS-BUILT BEAM TO COLUMN GAP PER CONNECTION SCHEDULE IS ALLOWED TO BE INSTALLED WITH A TOLERANCE OF PLUS OR MINUS 1/2 INCH.
2. FAYING SURFACES:
   a. THE SURFACES ADJACENT TO THE BOLT HEAD AND NUT SHALL BE FREE OF DIRT AND OTHER FOREIGN MATERIAL OTHER THAN THE SPECIFIED COATINGS.
   b. FAYING SURFACES ARE PERMITTED TO BE UNCOATED AND COATED WITH ANY COATINGS OF ANY FORMULATION OR GALVANIZATION.
   c. AFTER THE CONNECTIONS HAVE BEEN ASSEMBLED, VISUALLY ENSURE THAT THE PLIES OF THE CONNECTED ELEMENTS HAVE BEEN BROUGHT INTO AS CLOSE OF CONTACT AS PRACTICABLE WITH ONE ANOTHER. GAPS UP TO 1/8 INCH BETWEEN THE SURFACES SHALL BE ALLOWED. GAPS GREATER THAN 1/8 INCH UP TO 1/4 INCH SHALL HAVE FINGER SHIMS INSTALLED BEFORE PRETENSIONING. FOR GAPS GREATER THAN 1/4 INCH, CONTACT SIDEPLATE SYSTEMS, INC.

HOT DIPPED GALVANIZING

1. SIDEPLATE CONNECTIONS REQUIRING THIS TYPE OF FINISH SHALL FOLLOW THE SAME CONSTRUCTION SEQUENCING AS PREVIOUSLY OUTLINED WITH THE FOLLOWING MODIFICATIONS:
   a. HORIZONTAL SHEAR PLATES {D} SHALL HAVE AN INCREASED CLIP SIZE WHICH SHALL BE 1 5/8 INCH BY 1 5/8 INCH TO PROVIDE ADEQUATE VENTILATION AND DRAINAGE. CONTACT SIDEPLATE SYSTEMS, INC. IN THE EVENT THAT THE GALVANIZING CONTRACTOR SPECIFICATIONS REQUIRE A LARGER OPENING THAN THAT SPECIFIED HEREIN.
   b. SEAL WELDING SHALL BE ALLOWED ON THE PLATES {B} AND ANGLES.
   c. ANY DEVIATIONS TO THESE MODIFICATIONS SHALL BE COORDINATED WITH SIDEPLATE SYSTEMS, INC. AND THE SEOR.

FIREPROOFING

1. WHEN REQUIRED BY THE GOVERNING CODE FOR CERTAIN TYPES OF CONSTRUCTION, SIDEPLATE CONNECTIONS SHALL HAVE A FIRE-RESISTANCE RATING LIKE THAT OF A STEEL "STRUCTURAL FRAME".
2. THE MINIMUM THICKNESS OF SPRAY-APPLIED FIRE-RESISTIVE MATERIAL (SFRM) FOR STEEL SIDEPLATE CONNECTIONS PLATES THAT ARE NOT ENCASED IN CONCRETE, SHALL BE DETERMINED JUST LIKE THAT OF A PIPE/TUBE COLUMN SECTION WITH A CONSTANT STEEL WALL THICKNESS USING THE THICKNESS OF SIDE PLATE {A} FOR EACH SIDEPLATE CONNECTION ID PER THE SIDEPLATE CONNECTION SCHEDULE, WHICH ARE UNIFORMLY HEATED AND PROTECTED (THE FIRE EXPOSURE OF A PIPE/TUBE COLUMN IS DIRECTLY ANALOGOUS TO A PLATE WITH A 1-SIDED FIRE EXPOSURE AND PROTECTION). THE SFRM SHALL HAVE BEEN TESTED IN ACCORDANCE WITH ASTM E119 AND LISTED FOR FIRE RESISTIVE PIPE/TUBE COLUMN APPLICATIONS FOR NO LESS THAN THE REQUIRED RATED TIME.
3. AS REQUIRED, WHEN NO VERTICAL SHEAR ELEMENT {F} EXISTS IN THE BEAM, SPRAY THE MINIMUM THICKNESS OF SFRM BETWEEN INSIDE OF SIDE PLATE {A} AND BEAM WEB COVERING ALL SURFACES INCLUDING COLUMN FLANGE. NOTE: THIS DOES NOT NECESSITATE FILLING THE CAVITY FULL.
4. WHEN VERTICAL SHEAR ELEMENT {F} IS USED, THE CONTRACTOR SHALL PROVIDE THE MEANS, TYPICALLY DONE WITH A LAYERING TECHNIQUE, FOR FIREPROOFING ACROSS THE BOTTOM OF THE GAP.
5. SEE GRAPHIC NUMBER 10 IN FIELD ERECTION OF THE SIDEPLATE BOLTED SYSTEM FOR FIREPROOFING ACROSS THE BOTTOM OF THE GAP.

INTELLECTUAL PROPERTY

1. IN ORDER TO SAFEGUARD THE AUTHORIZED USE AND INTELLECTUAL PROPERTY OF THE PATENTED SIDEPLATE CONNECTION TECHNOLOGY, THE STEEL FABRICATION SUBCONTRACTOR SHALL SATISFY THE FOLLOWING REQUIREMENTS:
   a. A NOTICE OF INTELLECTUAL PROPERTY, IDENTICAL TO THAT PROVIDED ON THIS SHEET, SHALL BE AFFIXED ON EACH SHEET OF SHOP DETAIL AND FIELD ERECTION DRAWINGS CONTAINING SIDEPLATE SYSTEM INFORMATION WHICH DISCLOSES IN ANY WAY THE SIDEPLATE CONNECTION CONCEPT AND/OR TO EXHIBIT SUCH INFORMATION FOR ITS INTENDED USE. SUCH NOTICE SHALL BE PROVIDED TO THE STEEL FABRICATION SUBCONTRACTOR BY SIDEPLATE SYSTEMS, INC. IN A FORMAT (E.G. WORD OR AUTOCAD) SUITABLE TO THE NEEDS OF THE STEEL FABRICATION SUBCONTRACTOR'S DETAILER.
   b. PATENT LABELS SHALL BE APPLIED ON THE OUTSIDE FACE OF ONE OF THE TWO BOTTOM HORIZONTAL SHEAR PLATES {D} OF EACH MOMENT CONNECTION AND ON ONE END OF THE BEAM WEB IN COMPLIANCE WITH THE PATENT AND INTELLECTUAL PROPERTY LAWS.

CONSTRUCTION GUIDELINES

1. THE CONTRACTOR SHALL ASSUME FULL AND COMPLETE RESPONSIBILITY FOR THE MEANS AND METHODS OF CONSTRUCTING THE STEEL FRAME USING THE SIDEPLATE BOLTED SYSTEM. CONSTRUCTION MEANS AND METHODS SHALL BE COMPLIANT WITH THE CURRENT PROVISIONS OF AWS D1.1, THE AISC 360 CODE OF STANDARD PRACTICE, THE RCSC HIGH-STRENGTH BOLTING SPECIFICATIONS, AND THE CONSTRUCTION GUIDELINES PROVIDED HEREHEIN AND SHALL INCLUDE, BUT ARE NOT LIMITED TO:
   a. DIMENSIONAL VERIFICATION AND CONTROL
   b. FABRICATION AND ERECTION PROCEDURES (INCLUDING METHODS FOR CONTROLLING DISTORTION DUE TO WELD SHRINKAGE, AND FOR CONTROLLING COMBINED MILL, FABRICATION AND ERECTION TOLERANCES)
   c. CONSTRUCTION AIDS SUCH AS ERECTION RIGGING AND SHORING
   d. PROPER BOLT HOLE ALIGNMENT
   e. PROPER PRETENSIONING OF BOLTS
2. THE SEQUENCE OF CONSTRUCTION OPTIONS PROVIDED BELOW IN THESE CONSTRUCTION GUIDELINES HAVE PROVEN TO BE SUCCESSFUL BY STEEL FABRICATORS AND ERECTORS TO COST EFFICIENTLY CONSTRUCT THE BOLTED SIDEPLATE CONNECTION SYSTEM. VARIATIONS TO THESE CONSTRUCTION SEQUENCE OPTIONS PROVIDED BELOW SHALL BE SUBMITTED FOR REVIEW AND DISPOSITION TO SIDEPLATE SYSTEMS, INC.
3. A PRE-FABRICATION COORDINATION MEETING WITH A SIDEPLATE SYSTEMS, INC. REPRESENTATIVE IS REQUIRED FOR ALL PROJECTS. THE PRE-FABRICATION COORDINATION MEETING IS INTENDED TO SHARE BEST PRACTICES AND COMMON MISTAKES TO AVOID.

SHOP FABRICATION OF THE SIDEPLATE BOLTED SYSTEM

1. WATCH OUR SIDEPLATE COLUMN ASSEMBLY VIDEO AT

https://portal.sideplate.com/account/login

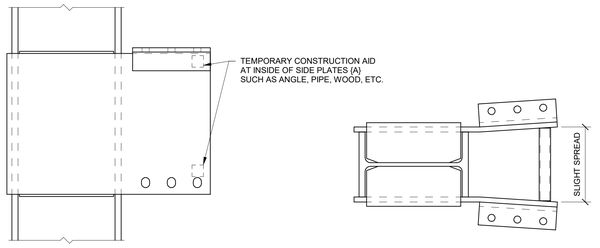

GRAPHIC NO. 1 - COLUMN TREE ASSEMBLY PREPARATION FOR WELD {2}

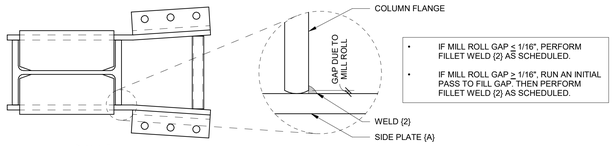

GRAPHIC NO. 2 - MILL ROLL INDUCED GAP

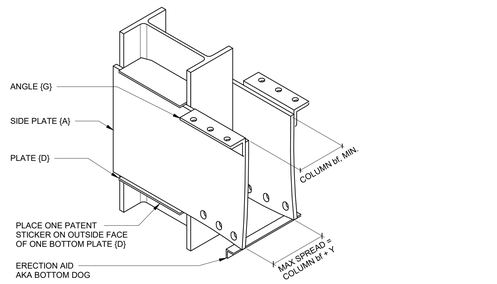

GRAPHIC NO. 3 - COMPLETED SIDEPLATE BOLTED COLUMN TREE ASSEMBLY

2. WATCH OUR SIDEPLATE BEAM ASSEMBLY VIDEO AT

https://portal.sideplate.com/account/login

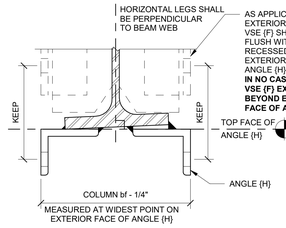

GRAPHIC NO. 4 - ANGLE (H) PLACEMENT

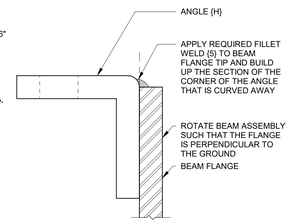

GRAPHIC NO. 5 - ROTATE BEAM ASSEMBLY TO FACILITATE WELD (5) MATERIAL AT MINIMAL EDGE DISTANCE

FIELD ERECTION OF SIDEPLATE BOLTED SYSTEM

3. WATCH OUR SIDEPLATE FIELD ERECTION VIDEO AT

https://portal.sideplate.com/account/login

PATENT STICKER
LOWER BEAM ASSEMBLY INTO PLACE

INTELLECTUAL PROPERTY RIGHTS NOTICE
The SIDEPLATE® steel frame connection system is covered by one or more of U.S. Pat. Nos. 6,138,427; 6,516,583; 6,591,573; 7,178,296; 8,122,671; 8,122,672; 8,146,322; 8,176,706; 8,205,408; and 9,091,065 and foreign counterparts. Other U.S. and foreign applications pending.

SIDEPLATE® is a registered trademark of MiTek Holdings, Inc., an affiliate of SidePlate Systems, Inc.

Copyright © 2019 SidePlate Systems, Inc. All rights reserved. Without limitation, this drawing and the information hereon may be used only following payment of a license fee to SidePlate Systems, Inc. and for the design, construction, operation, repair, maintenance, restoration or demolition of the building(s) specifically identified.

v15.06.02

NMF BOLTED

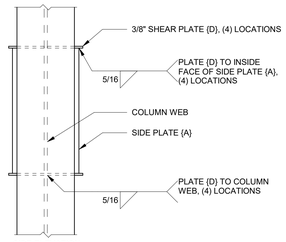

SIDE ELEVATION

NOTE(S):
1. LONGITUDINAL ANGLES {G} NOT SHOWN FOR CLARITY.

8 PLATE {D} DETAIL FOR SLOPED CONDITIONS
N.T.S.

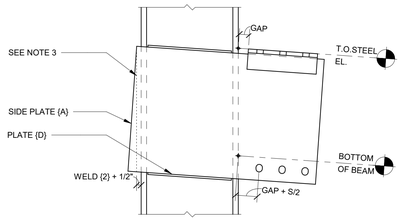

FRONT ELEVATION

NOTE(S):
1. FOR BEAM SLOPES > 1" PER FOOT, CONTACT SIDEPLATE SYSTEMS, INC.
2. COORDINATE PLATES, ANGLES, AND DIMENSIONS WITH RESPECT TO THE SLOPE OF THE CONNECTION.
3. AT CONTRACTOR'S DISCRETION, SIDE PLATE {A} MAY BE CUT AS SHOWN.
4. HORIZONTAL SHEAR PLATES {D} AND ASSOCIATED WELDS ARE REQUIRED FOR SLOPED SIDE PLATE CONDITIONS. SEE 8 / S8.02

4 SLOPED DOWN CONNECTION (AS APPLICABLE)
N.T.S.

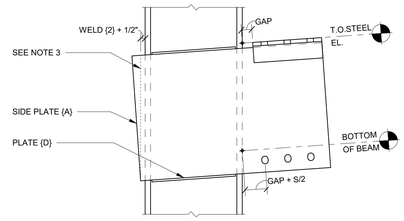

FRONT ELEVATION

NOTE(S):
1. FOR BEAM SLOPES > 1" PER FOOT, CONTACT SIDEPLATE SYSTEMS, INC.
2. COORDINATE PLATES, ANGLES, AND DIMENSIONS WITH RESPECT TO THE SLOPE OF THE CONNECTION.
3. AT CONTRACTOR'S DISCRETION, SIDE PLATE {A} MAY BE CUT AS SHOWN.
4. HORIZONTAL SHEAR PLATES {D} AND ASSOCIATED WELDS ARE REQUIRED FOR SLOPED SIDE PLATE CONDITIONS. SEE 8 / S8.02

3 SLOPED UP CONNECTION (AS APPLICABLE)
N.T.S.

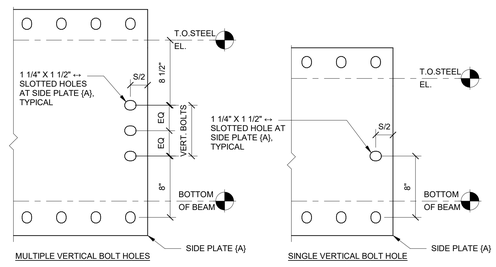

MULTIPLE VERTICAL BOLT HOLES

SINGLE VERTICAL BOLT HOLE

NOTE(S):
1. SEE COLUMN SCHEDULE FOR BOLT QUANTITY.

7 SIDE PLATE {A} VSE BOLT HOLE DETAIL
N.T.S.

ID	COLUMN PANEL ZONE DESIGN (INCHES)				SIDE PLATE {A} EXTENSION DESIGN (INCHES)								
	COLUMN	WELD	BEAM		PLATE				BOLT				
	SERIES	{2}	SHAPE	GAP	{A}				DIAMETER	HORIZONTAL #	VERTICAL #	G	S
		SIZE			THICKNESS	B	E	Y					
A15	W14x	3/8	W24X68	2	5/8	31 3/4	1 3/8	2 1/2	1 1/8	4	2	2 1/8	4 1/2
A25	W14x	3/8	W24X94	2	5/8	32 1/4	1 3/8	3 5/8	1 1/8	5	2	2 1/8	4 1/2
A45	W14x	3/8	W36X160	2	5/8	44	1 3/8	5	1 1/8	6	3	2 1/8	4 1/2

6 A TYPE NARROW COLUMN CONNECTION SCHEDULE
N.T.S.

ID	COLUMN PANEL ZONE DESIGN (INCHES)				SIDE PLATE {A} EXTENSION DESIGN (INCHES)												
	COLUMN	WELD	BEAM		PLATE				ANGLE				WELD	BOLT			
	SERIES	{2}	SHAPE	GAP	{A}				{G}				{8}	DIAMETER	HORIZONTAL #	G	S
		SIZE			THICKNESS	B	Y		SUGGESTED SIZE	HORIZONTAL LEG	VERTICAL LEG	SIZE					
A10, A11, A19	W14x	3/8	W24X68	2	5/8	27 1/4	2 1/2		L5X3-1/2X5/8	3-1/2 to 6	4 to 6	5/16	1 1/8	4	2 1/8	4 1/2	
A12	W14x	7/16	W24X68	2 1/4	1	27 1/4	1 7/8		L5X3-1/2X5/8	3-1/2 to 6	4 to 6	5/16	1 1/8	4	2 1/8	4 1/2	
A20	W14x	3/8	W24X94	2	7/8	27 3/4	2 7/8		L5X3-1/2X5/8	3-1/2 to 6	4 to 6	5/16	1 1/8	5	2 1/8	4 1/2	
A30	W14x	3/8	W36X150	2	5/8	39 3/8	5		L5X3-1/2X5/8	3-1/2 to 6	4 to 6	5/16	1 1/8	6	2 1/8	4 1/2	

2 A TYPE COLUMN CONNECTION SCHEDULE
N.T.S.

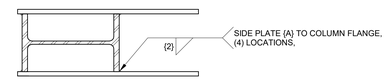

PLAN VIEW

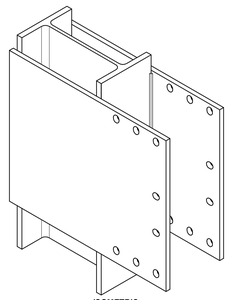

ISOMETRIC

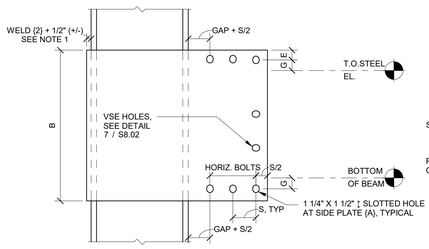

FRONT ELEVATION

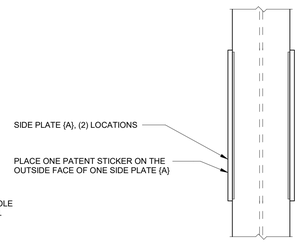

SIDE ELEVATION

NOTE(S):
1. THE 1/2 INCH OVERHANG ON THE SIDE PLATE {A} IS TO ENSURE SUFFICIENT ROOM FOR WELD {2}, THE +/- TOLERANCE IS APPLIED SO THAT IF DESIRED, THE DETAILER CAN MAKE THE SIDE PLATES {A} THE SAME LENGTH WITH SLIGHTLY VARYING COLUMN DEPTHS WITHIN A GROUP OF THE SAME CONNECTION ID'S.

5 A TYPE NARROW BOLTED CONNECTION
N.T.S.

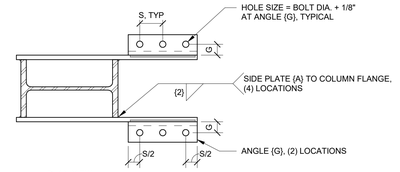

PLAN VIEW

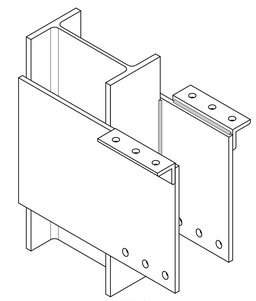

ISOMETRIC

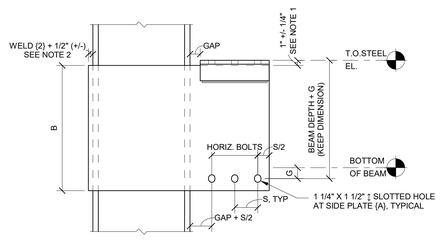

FRONT ELEVATION

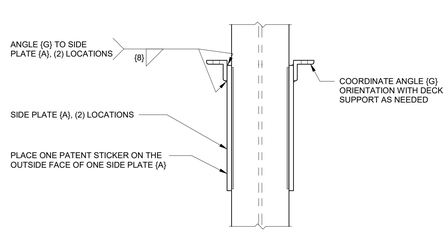

SIDE ELEVATION

NOTE(S):
1. THE +/- 1/4 INCH TOLERANCE FOR PLACEMENT OF ANGLES {G} IS TO ENSURE CORRECT TOP OF STEEL PLACEMENT RELATIVE TO THE CENTERLINE OF THE BOTTOM HORIZONTAL ROW OF BOLT HOLES. THE PLACEMENT OF ANGLES {G} SHALL NEVER BE MEASURED FROM THE BOTTOM EDGE OF SIDE PLATE {A} TO ESTABLISH THE CORRECT TOP OF STEEL.
2. THE 1/2 INCH OVERHANG ON THE SIDE PLATE {A} IS TO ENSURE SUFFICIENT ROOM FOR WELD {2}, THE +/- TOLERANCE IS APPLIED SO THAT IF DESIRED, THE DETAILER CAN MAKE THE SIDE PLATES {A} THE SAME LENGTH WITH SLIGHTLY VARYING COLUMN DEPTHS WITHIN A GROUP OF THE SAME CONNECTION ID'S.

1 A TYPE BOLTED CONNECTION
N.T.S.

James R. Childers Architect, Inc.
45 South 4th Street
Fort Smith, AR 72901
479-783-2480
www.childersarchitect.com

PROFESSIONAL SEAL:
LICENSED PROFESSIONAL ENGINEER
JARED ADAMS
25110
OKLAHOMA
10/30/2019
Company: SidePlate Systems, Inc
CoA: CA 6208 PE
Renewal Date: 6/30/2019

CONSULTANT LOGO:

CLIENT:
THE CHEROKEE NATION
TRIBAL SEAL
SEPT. 6, 1839

WILMA P. MANKILLER HEALTH CENTER EXPANSION
STILWELL, OKLAHOMA

KEY PLAN:

PROJECT PHASE:
BID PACKAGE 01

REVISIONS

#	DATE	DESCRIPTION

DATE: 11-01-19
JOB NUMBER: 18-01.01
SHEET NUMBER: S8.02

SIDEPLATE COLUMN DETAILS, A TYPE

INTELLECTUAL PROPERTY RIGHTS NOTICE
The SIDEPLATE® steel frame connection system is covered by one or more of U.S. Pat. Nos. 6,138,427; 6,516,583; 6,591,573; 7,178,296; 8,122,671; 8,122,672; 8,146,322; 8,176,706; 8,205,408; and 9,091,065 and foreign counterparts. Other U.S. and foreign applications pending.

SIDEPLATE® is a registered trademark of MiTek Holdings, Inc., an affiliate of SidePlate Systems, Inc.

Copyright © 2019 SidePlate Systems, Inc. All rights reserved. Without limitation, this drawing and the information hereon may be used only following payment of a license fee to SidePlate Systems, Inc. and for the design, construction, operation, repair, maintenance, restoration or demolition of the building(s) specifically identified.
v15.06.02

NMF BOLTED

ID	COLUMN PANEL ZONE DESIGN (INCHES)				SIDE PLATE {A} EXTENSION DESIGN (INCHES)								
	COLUMN	WELD	BEAM		PLATE				BOLT				
	SERIES	{2}	SHAPE	GAP	{A}				DIAMETER	HORIZONTAL #	VERTICAL #	G	S
		SIZE			THICKNESS	B	E	Y					
B15	W14x	3/8	W24X68	2	5/8	31 3/4	1 3/8	2 1/2	1 1/8	4	2	2 1/8	4 1/2
B25	W14x	1/2	W24X94	2	5/8	32 1/4	1 3/8	3 5/8	1 1/8	5	2	2 1/8	4 1/2
B45	W14x	1/2	W36X160	2	5/8	44	1 3/8	5	1 1/8	6	3	2 1/8	4 1/2

6 B TYPE NARROW COLUMN CONNECTION SCHEDULE
N.T.S.

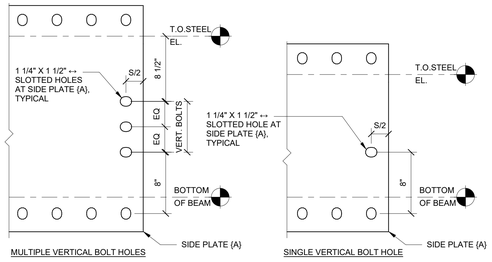

NOTE(S):
1. SEE COLUMN SCHEDULE FOR BOLT QUANTITY.

7 SIDE PLATE {A} VSE BOLT HOLE DETAIL
N.T.S.

ID	COLUMN PANEL ZONE DESIGN (INCHES)				SIDE PLATE {A} EXTENSION DESIGN (INCHES)											
	COLUMN	WELD	BEAM		PLATE			ANGLE				WELD	BOLT			
	SERIES	{2}	SHAPE	GAP	{A}			{G}				{8}	DIAMETER	HORIZONTAL #	G	S
		SIZE			THICKNESS	B	Y	SUGGESTED SIZE	HORIZONTAL LEG	VERTICAL LEG		SIZE				
B11	W14x	3/8	W24X68	2	5/8	27 1/4	2 1/2	L5X3-1/2X5/8	3-1/2 to 6	4 to 6	5/16		1 1/8	4	2 1/8	4 1/2
B12	W14x	7/16	W24X68	2 1/4	1	27 1/4	1 7/8	L5X3-1/2X5/8	3-1/2 to 6	4 to 6	5/16		1 1/8	4	2 1/8	4 1/2
B19	W14x	1/2	W24X68	2	5/8	27 1/4	2 1/2	L5X3-1/2X5/8	3-1/2 to 6	4 to 6	5/16		1 1/8	4	2 1/8	4 1/2
B20	W14x	3/4	W24X94	2	7/8	27 3/4	2 7/8	L5X3-1/2X5/8	3-1/2 to 6	4 to 6	5/16		1 1/8	5	2 1/8	4 1/2
B30	W14x	1/2	W36X150	2	5/8	39 3/8	5	L5X3-1/2X5/8	3-1/2 to 6	4 to 6	5/16		1 1/8	6	2 1/8	4 1/2

2 B TYPE COLUMN CONNECTION SCHEDULE
N.T.S.

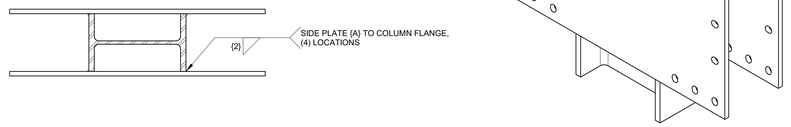

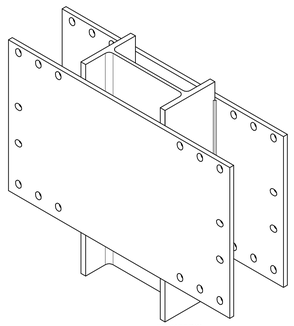

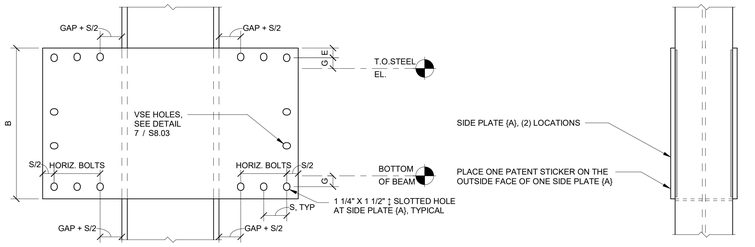

5 B TYPE NARROW BOLTED CONNECTION
N.T.S.

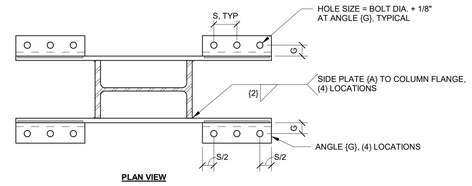

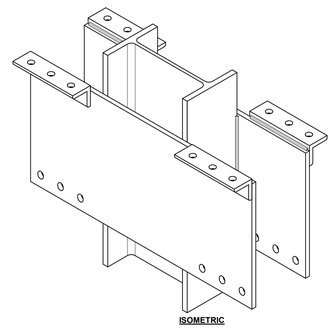

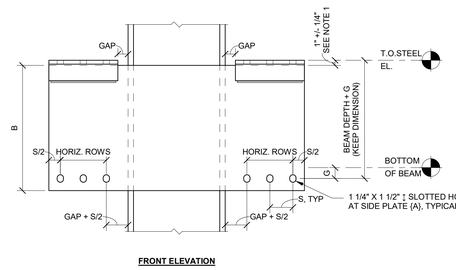

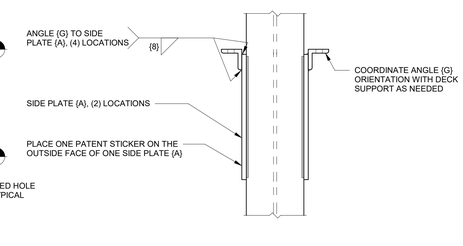

NOTE(S):
1. THE +/- 1/4 INCH TOLERANCE FOR PLACEMENT OF ANGLES {G} IS TO ENSURE CORRECT TOP OF STEEL PLACEMENT RELATIVE TO THE CENTERLINE OF THE BOTTOM HORIZONTAL ROW OF BOLT HOLES. THE PLACEMENT OF ANGLES {G} SHALL NEVER BE MEASURED FROM THE BOTTOM EDGE OF SIDE PLATE {A} TO ESTABLISH THE CORRECT TOP OF STEEL.

1 B TYPE BOLTED CONNECTION
N.T.S.

James R. Childers Architect, Inc.
45 South 4th Street
Fort Smith, AR 72901
479-783-2480
www.childersarchitect.com

PROFESSIONAL SEAL:
LICENSED PROFESSIONAL ENGINEER
JARED ADAMS
25110
OKLAHOMA
10/30/2019
Company: SidePlate Systems, Inc
CoA: CA 6208 PE
Renewal Date: 6/30/2019

CONSULTANT LOGO:

CLIENT:
THE CHEROKEE NATION
SEPT. 6, 1839

WILMA P. MANKILLER HEALTH CENTER EXPANSION
STILWELL, OKLAHOMA

KEY PLAN:

PROJECT PHASE:
BID PACKAGE 01

REVISIONS		
#	DATE	DESCRIPTION

DATE: 11-01-19
JOB NUMBER: 18-01.01
SHEET NUMBER: S8.03

SIDEPLATE COLUMN DETAILS, B TYPE

INTELLECTUAL PROPERTY RIGHTS NOTICE
The SIDEPLATE® steel frame connection system is covered by one or more of U.S. Pat. Nos. 6,138,427; 6,516,583; 6,591,573; 7,178,296; 8,122,671; 8,122,672; 8,146,322; 8,176,706; 8,205,408; and 9,091,065 and foreign counterparts.
Other U.S. and foreign applications pending.

SIDEPLATE® is a registered trademark of MiTek Holdings, Inc., an affiliate of SidePlate Systems, Inc.

Copyright © 2019 SidePlate Systems, Inc. All rights reserved. Without limitation, this drawing and the information hereon may be used only following payment of a license fee to SidePlate Systems, Inc. and for the design, construction, operation, repair, maintenance, restoration or demolition of the building(s) specifically identified.
v15.06.02
NMF BOLTED

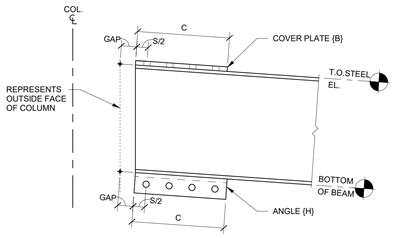

ELEVATION VIEW

NOTE(S):
1. FOR BEAM SLOPES > 1" PER FOOT, CONTACT SIDEPLATE SYSTEMS, INC.

4 SLOPED DOWN BEAM END (AS APPLICABLE)
N.T.S.

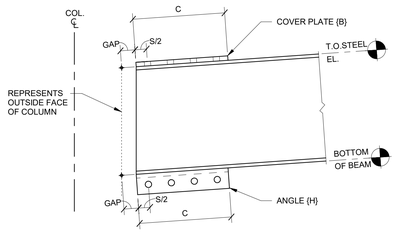

ELEVATION VIEW

NOTE(S):
1. FOR BEAM SLOPES > 1" PER FOOT, CONTACT SIDEPLATE SYSTEMS, INC.

3 SLOPED UP BEAM END (AS APPLICABLE)
N.T.S.

ID	BEAM DESIGN (INCHES)																							
	BEAM		PLATE								ANGLE				WELD					BOLT				
	SHAPE	GAP	{B}				STIFFENER (SEE DETAIL 6 THIS SHEET)				{H}				{S}	{5a}	{5b}	{W} (SEE DETAIL 6 THIS SHEET)		DIAMETER	HORIZONTAL #	G	S
			COVER PLATE TYPE	THICKNESS	E	H	THICKNESS	LENGTH X WIDTH	X	SS	SUGGESTED SIZE	C	HORIZONTAL LEG	VERTICAL LEG	SIZE	SIZE	SIZE	SIZE (SINGLE)	SIZE (DOUBLE)				
A10	W24X68	2	Slotted	1 1/8	1 3/8	8 1/4	-	-	-	-	L6X4X5/8	18	6	4	5/16	5/16	5/16	-	-	1 1/8	4	2 1/8	4 1/2
A11	W24X68	2	Slotted	7/8	1 3/8	8 1/4	-	-	-	-	L7X4X5/8	18	7	4	5/16	5/16	5/16	-	-	1 1/8	4	2 1/8	4 1/2
A12, B12	W24X68	2 1/4	Slotted	3/4	1 3/8	9	-	-	-	-	L7X4X5/8	18	7	4	5/16	5/16	5/16	-	-	1 1/8	4	2 1/8	4 1/2
A19, B19	W24X68	2	Slotted	1	1 3/8	8 1/4	1/4	4 X 4	3	6 3/4	L6X4X5/8	18	6	4	5/16	5/16	5/16	1/4	1/8	1 1/8	4	2 1/8	4 1/2
A20, B20	W24X94	2	Slotted	1 1/4	1 3/8	8 3/4	-	-	-	-	L6X4X5/8	22 1/2	6	4	5/16	5/16	5/16	-	-	1 1/8	5	2 1/8	4 1/2
A30, B30	W36X150	2	Slotted	1 1/4	1 3/8	8 1/4	-	-	-	-	L5X3-1/2X5/8	27	5	3 1/2	5/16	5/16	5/16	-	-	1 1/8	6	2 1/8	4 1/2
B11	W24X68	2	Slotted	3/4	1 3/8	8 1/4	-	-	-	-	L7X4X5/8	18	7	4	5/16	5/16	5/16	-	-	1 1/8	4	2 1/8	4 1/2

2 BEAM END SCHEDULE
N.T.S.

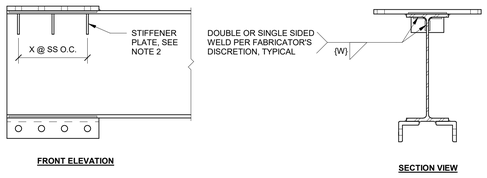

FRONT ELEVATION **SECTION VIEW**

NOTE(S):
1. SEE BEAM END SCHEDULE FOR QUANTITY, SPACING, AND WELDING OF STIFFENER PLATES.
2. STIFFENER PLATES SHALL BE MADE OF GRADE 50 MATERIAL.
3. STIFFENER PLATES AND WELDS ARE NOT CREATED BY SIDEPLATE CUSTOM COMPONENT TOOL

6 STIFFENER PLATES
N.T.S.

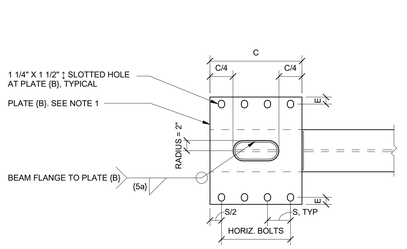

PLAN VIEW

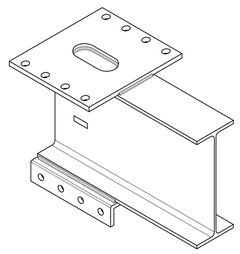

ISOMETRIC VIEW

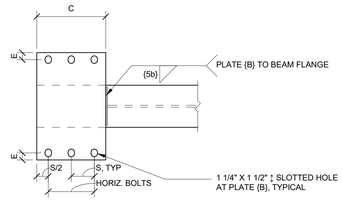

PLAN VIEW

NOTE(S):
1. FOR ITEMS NOT NOTED, SEE DETAIL 1 / S8.04

5 RECTANGULAR COVER PLATE {B}
N.T.S.

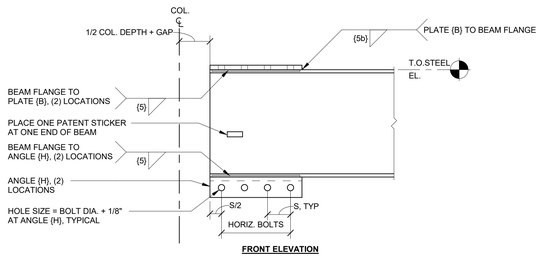

FRONT ELEVATION

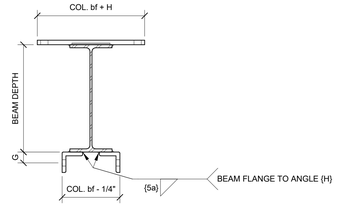

SECTION VIEW

NOTE(S):
1. USE SLOTTED OR RECTANGULAR COVER PLATE {B} PER SCHEDULE. FOR RECTANGULAR COVER PLATE, SEE DETAIL 5 / S8.04

1 BEAM END DETAIL
N.T.S.

James R. Childers
Architect, Inc.
45 South 4th Street
Fort Smith, AR 72901
479-783-2480
www.childersarchitect.com

PROFESSIONAL SEAL:
LICENSED PROFESSIONAL ENGINEER
JARED ADAMS
25110
OKLAHOMA
10/30/2019
Company: SidePlate Systems, Inc
CoA: CA 6208 PE
Renewal Date: 6/30/2019

CONSULTANT LOGO:

CLIENT:
TRIBAL SEAL OF THE CHEROKEE NATION
SEPT. 6, 1839

WILMA P. MANKILLER HEALTH CENTER
EXPANSION
STILWELL, OKLAHOMA

KEY PLAN:

PROJECT PHASE:
BID PACKAGE 01

REVISIONS		
#	DATE	DESCRIPTION

DATE: 11-01-19
JOB NUMBER: 18-01.01
SHEET NUMBER: S8.04

SIDEPLATE BEAM DETAILS

INTELLECTUAL PROPERTY RIGHTS NOTICE
The SIDEPLATE® steel frame connection system is covered by one or more of U.S. Pat. Nos. 6,138,427; 6,516,583; 6,591,573; 7,178,296; 8,122,671; 8,122,672; 8,146,322; 8,176,706; 8,205,408; and 9,091,065 and foreign counterparts. Other U.S. and foreign applications pending.

SIDEPLATE® is a registered trademark of MiTek Holdings, Inc., an affiliate of SidePlate Systems, Inc.

Copyright © 2019 SidePlate Systems, Inc. All rights reserved. Without limitation, this drawing and the information hereon may be used only following payment of a license fee to SidePlate Systems, Inc. and for the design, construction, operation, repair, maintenance, restoration or demolition of the building(s) specifically identified.

v15.06.02

KNIF BOLTED

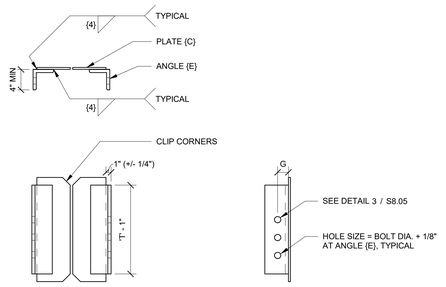

NOTE(S):
1. SEE SIDEPLATE SCHEDULE FOR BOLT QUANTITY.

4 VSE {F} DETAIL
N.T.S.

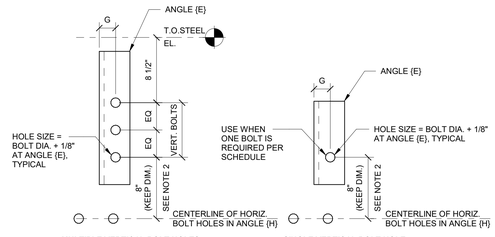

NOTE(S):
1. SEE BEAM END SCHEDULE FOR BOLT QUANTITY.
2. EFFECTS OF MILL AND FABRICATION TOLERANCES ARE ACCOUNTED FOR BY MEASURING FROM THE CENTERLINE OF THE HORIZONTAL ROW OF BOLTS IN THE BOTTOM ANGLES {H}.

3 VSE {F} HOLE DETAIL
N.T.S.

ID	BEAM DESIGN (INCHES)															
	BEAM		PLATE	ANGLE					WELD			BOLT				
	SHAPE	GAP	{C}	{H}				{E}	{4}	{5}	{5a}	DIAMETER	HORIZONTAL #	VERTICAL #	G	J	S
			THICKNESS	SUGGESTED SIZE	C	HORIZONTAL LEG	VERTICAL LEG	SIZE	SIZE	SIZE	SIZE						
A15, B15	W24X68	2	3/8	L6X4X5/8	18	6	4	L4X4X1/2	1/4	5/16	5/16	1 1/8	4	2	2 1/8	15 3/4	4 1/2
A25, B25	W24X94	2	3/8	L6X4X5/8	22 1/2	6	4	L4X4X1/2	1/4	5/16	5/16	1 1/8	5	2	2 1/8	20 1/4	4 1/2
A45, B45	W36X160	2	3/8	L5X3-1/2X5/8	27	5	3 1/2	L4X4X1/2	1/4	5/16	5/16	1 1/8	6	3	2 1/8	24 3/4	4 1/2

2 NARROW BEAM END SCHEDULE
N.T.S.

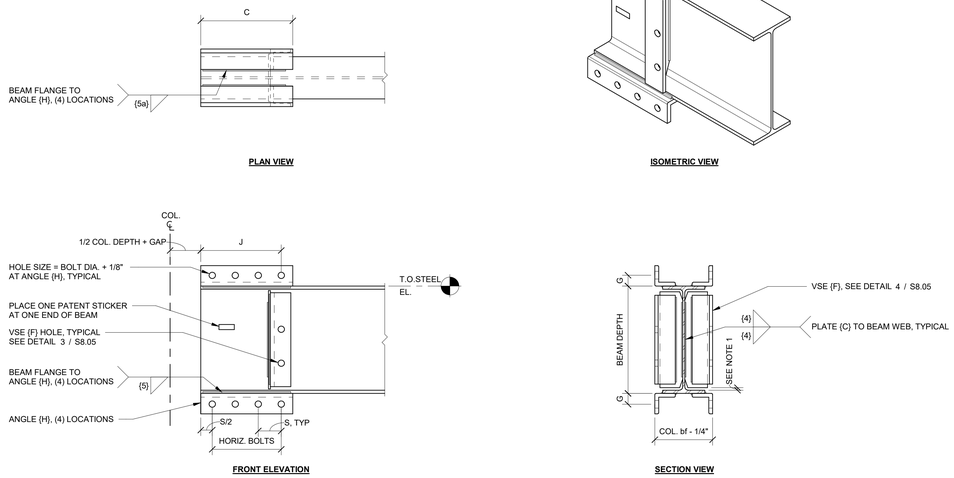

NOTE(S):
1. DIMENSION BETWEEN PLATE {C} AND INSIDE FACE OF BEAM FLANGE SHALL NOT EXCEED 1/4 INCH, AND MAY VARY DEPENDING ON BEAM MILL TOLERANCES. PLATE {C} SHALL BE CENTERED ON THE DEPTH OF THE BEAM.

1 NARROW BEAM END DETAIL
N.T.S.

James R. Childers
Architect, Inc.
45 South 4th Street
Fort Smith, AR 72901
479-783-2480
www.childersarchitect.com

PROFESSIONAL SEAL:
LICENSED PROFESSIONAL ENGINEER
JARED ADAMS
25110
OKLAHOMA
10/30/2019
Company: SidePlate Systems, Inc
CoA: CA 6208 PE
Renewal Date: 6/30/2019

CONSULTANT LOGO:

CLIENT:
TRIBAL SEAL OF THE CHEROKEE NATION FLAT SEPT. 6, 1839

WILMA P. MANKILLER HEALTH CENTER EXPANSION
STILWELL, OKLAHOMA

KEY PLAN:

PROJECT PHASE:
BID PACKAGE 01

REVISIONS		
#	DATE	DESCRIPTION

DATE: 11-01-19
JOB NUMBER: 18-01.01
SHEET NUMBER: S8.05

SIDEPLATE BEAM DETAILS, NARROW

INTELLECTUAL PROPERTY RIGHTS NOTICE
The SIDEPLATE® steel frame connection system is covered by one or more of U.S. Pat. Nos. 6,138,427; 6,516,583; 6,591,573; 7,178,296; 8,122,671; 8,122,672; 8,146,322; 8,176,706; 8,205,408; and 9,091,065 and foreign counterparts. Other U.S. and foreign applications pending.

SIDEPLATE® is a registered trademark of MiTek Holdings, Inc., an affiliate of SidePlate Systems, Inc.

Copyright © 2019 SidePlate Systems, Inc. All rights reserved. Without limitation, this drawing and the information hereon may be used only following payment of a license fee to SidePlate Systems, Inc. and for the design, construction, operation, repair, maintenance, restoration or demolition of the building(s) specifically identified.
v15.06.02
NOT FOR CONSTRUCTION

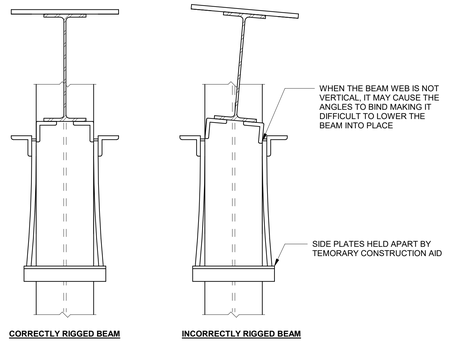

4 BEAM INSTALLATION DETAIL
N.T.S.

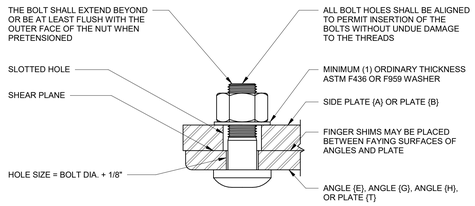

NOTE(S):
1. BOLTS SHALL BE INSTALLED AS SHOWN TO KEEP THREADS OUTSIDE OF SHEAR PLANE.
2. BOLTS SHALL BE SYSTEMATICALLY INSTALLED AS OUTLINED IN THE BOLTING SPECIFICATIONS. FIRST TO A SNUG TIGHT CONDITION, AND THEN PRETENSIONED.
3. THE USE OF FINGER SHIMS ARE ALLOWED FOR GAPS GREATER THAN 1/8 INCH UP TO 1/4 INCH. CONTACT SIDEPLATE SYSTEMS, INC. IF GAPS ARE GREATER THAN 1/4 INCH.
4. NUT SHALL BE ASTM A563.
5. THE BOLT/FASTENER ASSEMBLY SHALL BE COVERED IN A LIGHT PROTECTIVE OIL.
6. FOLLOW QUALITY CONTROL SECTION FOR EXPOSURE LIMITATION ON BOLTS/FASTENERS.

3 FIELD BOLTING DETAIL
N.T.S.

ID	ERECTION DESIGN (INCHES)				
	BEAM	BOLT			
	SHAPE	DIAMETER	HORIZONTAL #	VERTICAL #	TOTAL # PER BEAM END
A15, B15	W24X68	1 1/8	4	2	20
A25, B25	W24X94	1 1/8	5	2	24
A45, B45	W36X160	1 1/8	6	3	30

6 NARROW BEAM ERECTION SCHEDULE
N.T.S.

ID	ERECTION DESIGN (INCHES)				
	BEAM	BOLT			
	SHAPE	DIAMETER	HORIZONTAL #		TOTAL # PER BEAM END
A10, A11, A12, A19, B11, B12, B19	W24X68	1 1/8	4		16
A20, B20	W24X94	1 1/8	5		20
A30, B30	W36X150	1 1/8	6		24

2 BEAM ERECTION SCHEDULE
N.T.S.

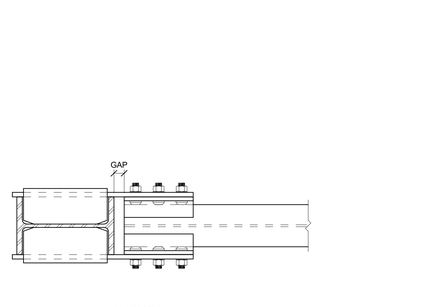

TYPICAL SEQUENCE OF ERECTION:
1. LOWER THE BEAM INTO PLACE FROM ABOVE.
2. STUFF A FEW BOLTS TO SECURE ASSEMBLY.
3. **BOTTOM DOG SHALL BE REMOVED.** IT IS RECOMMENDED THAT IT BE REMOVED BY TORCH CUTTING A 'V' SECTION OUT OF ONE OF THE ANGLE LEGS TO ALLEVIATE THE LOAD AND THEN PROCEED TO REMOVE IT. **IT IS NOT RECOMMENDED TO USE A GRINDING WHEEL TO REMOVE THE WELDS WHILE THE DOG IS UNDER LOAD!**
4. BOLTS SHALL BE STUFFED INTO HOLES IN THE BEAM COVER PLATE (B) AND THE SIDE PLATES (A).
5. SYSTEMATICALLY TIGHTEN BOLTS PER RCSC SPECIFICATIONS.
6. THE WELD REMNANTS OF THE BOTTOM DOG MAY REMAIN IN PLACE AND DO NOT NEED TO BE GROUND SMOOTH.

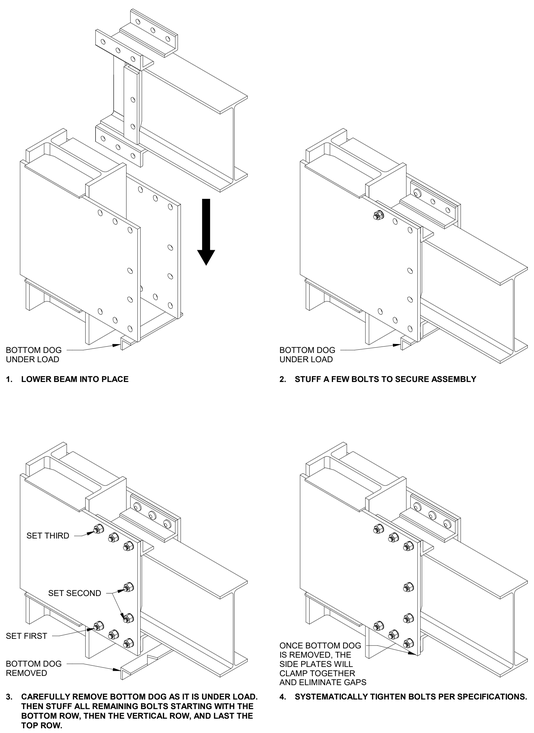

5 NARROW BEAM ERECTION DETAIL
N.T.S.

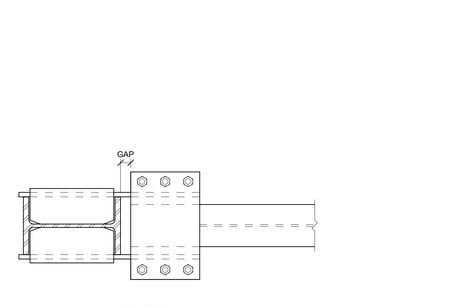

TYPICAL SEQUENCE OF ERECTION:
1. LOWER THE BEAM INTO PLACE FROM ABOVE.
2. STUFF A FEW BOLTS TO SECURE ASSEMBLY.
3. **BOTTOM DOG SHALL BE REMOVED**. IT IS RECOMMENDED THAT IT BE REMOVED BY TORCH CUTTING A 'V' SECTION OUT OF ONE OF THE ANGLE LEGS TO ALLEVIATE THE LOAD AND THEN PROCEED TO REMOVE IT. **IT IS NOT RECOMMENDED TO USE A GRINDING WHEEL TO REMOVE THE WELDS WHILE THE DOG IS UNDER LOAD!**
4. BOLTS SHALL BE STUFFED INTO HOLES IN THE BEAM COVER PLATE (B) AND THE SIDE PLATES (A).
5. SYSTEMATICALLY TIGHTEN BOLTS PER RCSC SPECIFICATIONS.
6. THE WELD REMNANTS OF THE BOTTOM DOG MAY REMAIN IN PLACE AND DO NOT NEED TO BE GROUND SMOOTH.

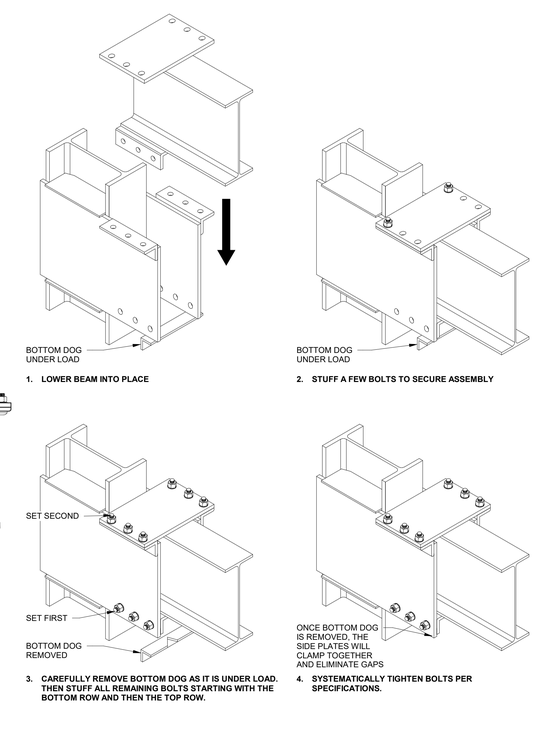

1 BEAM ERECTION DETAIL
N.T.S.

James R. Childers Architect, Inc.
45 South 4th Street
Fort Smith, AR 72901
479-783-2480
www.childersarchitect.com

PROFESSIONAL SEAL:
LICENSED PROFESSIONAL ENGINEER
JARED ADAMS
25110
OKLAHOMA
10/30/2019
Company: SidePlate Systems, Inc
CoA: CA 6208 PE
Renewal Date: 6/30/2019

CONSULTANT LOGO:

CLIENT:
THE CHEROKEE NATION
SEAL OF THE CHEROKEE NATION FLAG
SEPT. 6, 1839

WILMA P. MANKILLER HEALTH CENTER EXPANSION
STILWELL, OKLAHOMA

KEY PLAN:

PROJECT PHASE:
BID PACKAGE 01

REVISIONS		
#	DATE	DESCRIPTION

DATE: 11-01-19
JOB NUMBER: 18-01.01
SHEET NUMBER: S8.06

SIDEPLATE FIELD ERECTION DETAILS

INTELLECTUAL PROPERTY RIGHTS NOTICE
The SIDEPLATE® steel frame connection system is covered by one or more of U.S. Pat. Nos. 6,138,427; 6,516,583; 6,591,573; 7,178,296; 8,122,671; 8,122,672; 8,146,322; 8,176,706; 8,205,408; and 9,091,065 and foreign counterparts. Other U.S. and foreign applications pending.

SIDEPLATE® is a registered trademark of MiTek Holdings, Inc., an affiliate of SidePlate Systems, Inc.

Copyright © 2019 SidePlate Systems, Inc. All rights reserved. Without limitation, this drawing and the information hereon may be used only following payment of a license fee to SidePlate Systems, Inc. and for the design, construction, operation, repair, maintenance, restoration or demolition of the building(s) specifically identified.

v15.06.02

NOT BOLTED

Misc ID	Coordinate with Detail
M1	11/S8.07

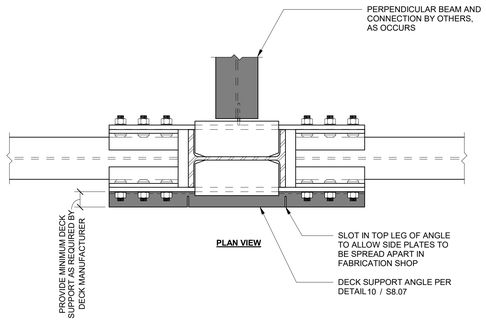

8 NARROW CONFIGURATION DECK SUPPORT DETAIL
N.T.S.

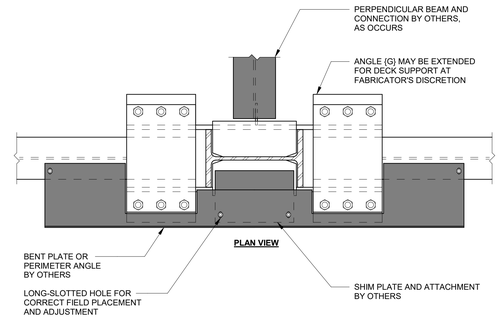

4 SLAB EDGE DETAIL
N.T.S.

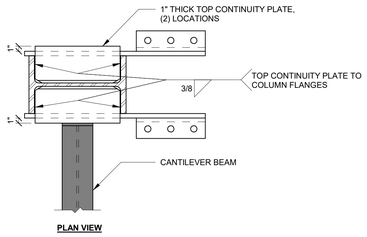

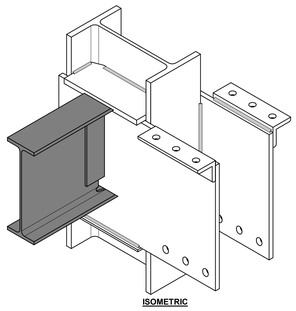

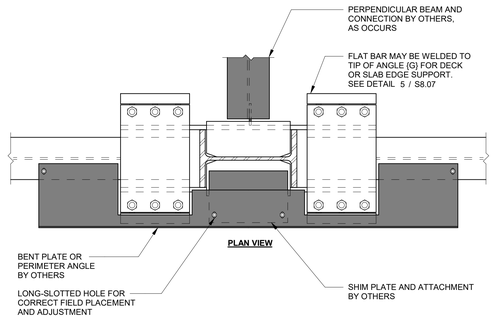

7 WELDED FLAT BAR FOR SLAB EDGE SUPPORT DETAIL
N.T.S.

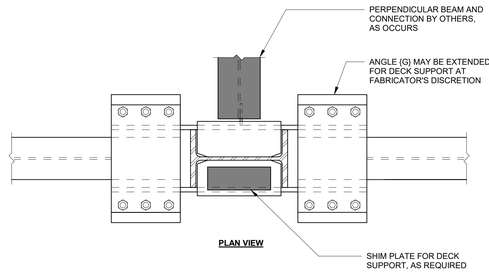

3 DECK SUPPORT DETAIL
N.T.S.

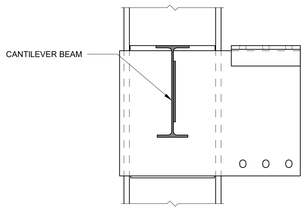

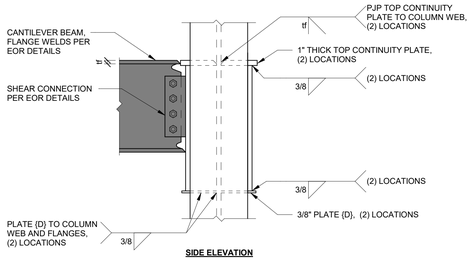

NOTE(S):
1. ATTACHMENT SHOWN ON ONE SIDE OF SIDEPLATE CONNECTION FOR ILLUSTRATION. ATTACHMENT CAN OCCUR ON LEFT SIDE, RIGHT SIDE, OR BOTH SIDES OF CONNECTION AS APPLICABLE.

11 CANTILEVER TO SIDEPLATE CONNECTION
N.T.S.

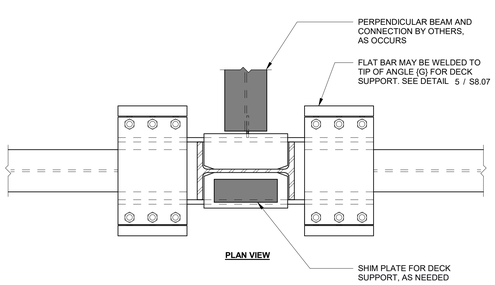

6 WELDED FLAT BAR DECK SUPPORT DETAIL
N.T.S.

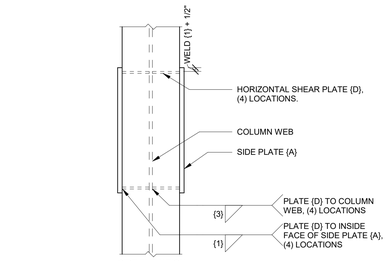

NOTE(S):
1. LONGITUDINAL ANGLES {G} NOT SHOWN FOR CLARITY.

2 PLATE {D} ALTERNATE DETAIL
N.T.S.

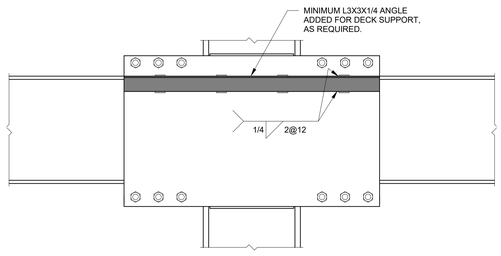

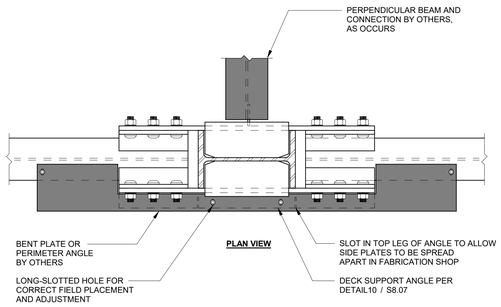

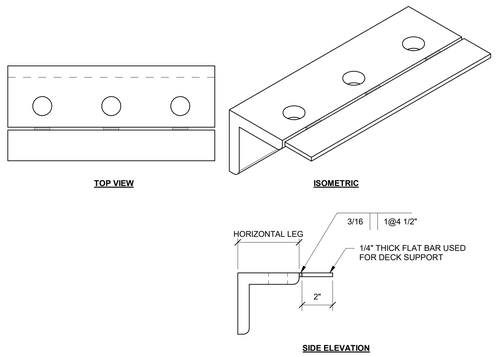

5 WELDED FLAT BAR TO ANGLE {G} FOR DECK SUPPORT
N.T.S.

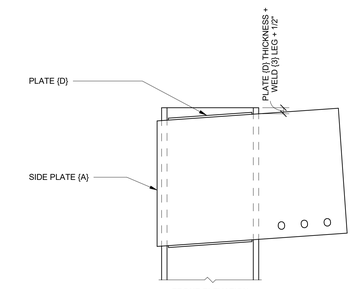

NOTE(S):
1. SLOPED CONDITION SHOWN, CONNECTION MAY BE FLAT.
2. LONGITUDINAL ANGLES {G} NOT SHOWN FOR CLARITY.

1 DISCONTINUOUS COLUMN DETAIL
N.T.S.

10 DECK SUPPORT ANGLE DETAIL
N.T.S.

9 NARROW CONFIGURATION SLAB EDGE DETAIL
N.T.S.

James R. Childers Architect, Inc.
45 South 4th Street
Fort Smith, AR 72901
479-783-2480
www.childersarchitect.com

PROFESSIONAL SEAL:
LICENSED PROFESSIONAL ENGINEER
JARED ADAMS
25110
OKLAHOMA
10/30/2019
Company: SidePlate Systems, Inc
CoA: CA 6208 PE
Renewal Date: 6/30/2019

CONSULTANT LOGO:

CLIENT:
THE CHEROKEE NATION
SEPT. 6, 1839

WILMA P. MANKILLER HEALTH CENTER EXPANSION
STILWELL, OKLAHOMA

KEY PLAN:

PROJECT PHASE:
BID PACKAGE 01

REVISIONS

#	DATE	DESCRIPTION

DATE: 11-01-19
JOB NUMBER: 18-01.01
SHEET NUMBER: S8.07

SIDEPLATE MISC DETAILS AND COORDINATION ITEMS

EXISTING ELECTRICAL AND DEMOLITION NOTES	
1	PRIOR TO SUBMITTING BID, VISIT THE JOB SITE AND BECOME FULLY ACQUAINTED WITH THE EXISTING CONDITIONS OF THE FACILITY AND RELATED SITE. REVIEW THE GENERAL NOTES AND ALL OTHER TRADE DRAWINGS FOR ADDITIONAL REQUIREMENTS THAT MAY NOT BE CALLED OUT IN THIS PORTION OF THE BID PACKAGE. NOTIFY ARCHITECT, ENGINEER OR OWNER, AS SPECIFIED, OF ANY CONFLICTS OR DISCREPANCIES PRIOR TO SUBMITTING BID.
2	FIELD VERIFY ALL EXISTING CONDITIONS AND CAREFULLY COORDINATE NEW WORK AND DEMOLITION WITH ALL OTHER DISCIPLINES AND EXISTING CONDITIONS.
3	PROVIDE ALL DEMOLITION OF EXISTING ELECTRICAL SYSTEMS. PROVIDE NEW ELECTRICAL SYSTEM MODIFICATIONS REQUIRED BECAUSE OF BUILDING REMODELING, AS NOTED ON THE DRAWINGS, OR NECESSARY FOR PROPER OPERATION AND NEW CONSTRUCTION.
4	COORDINATE INTERUPTION OF ALL BUILDING SERVICES INCLUDING BUT NOT LIMITED TO BRANCH CIRCUITS, DATA, TELEPHONE, ETC WITH BUILDING OWNER PRIOR TO INTERUPTION. PROVIDE LABOR AND MATERIALS AS REQUIRED TO REDUCE INTERUPTIONS IN ORDER TO MAINTAIN EXISTING OPERATION.
5	PAY SPECIAL ATTENTION NOT TO DAMAGE THE FINISH OF EXISTING WALLS AND CEILINGS THAT ARE TO REMAIN. REPAIR ANY DAMAGE CAUSED DURING WORK AT NO EXTRA COST TO THE OWNER.

KEYNOTES	
26.22	EXISTING FIXTURES SHALL BE REMOVED, CLEANED, REPAIRED, AND STORED, UNTIL SUCH TIME WHEN THEY CAN BE REINSTALLED IN NEW CANOPY SECTIONS ON NORTH SIDE OF EXISTING TO REMAIN CANOPY.
26.23	E.C SHALL SURVEY EXISTING CONDITIONS AND CONFIRM THAT ALL LIGHTS FIRE ALARM SECURITY AND GENERAL POWER CIRCUITS SHALL NOT BE AFFECTED BY BUILDING TO BE DEMOLISHED. IF ANY ISSUES ARE DISCOVERED E.C. SHALL REPAIR OR RELOCATE SO CLINIC WILL NOT TO BE AFFECTED BY DEMOLITION.

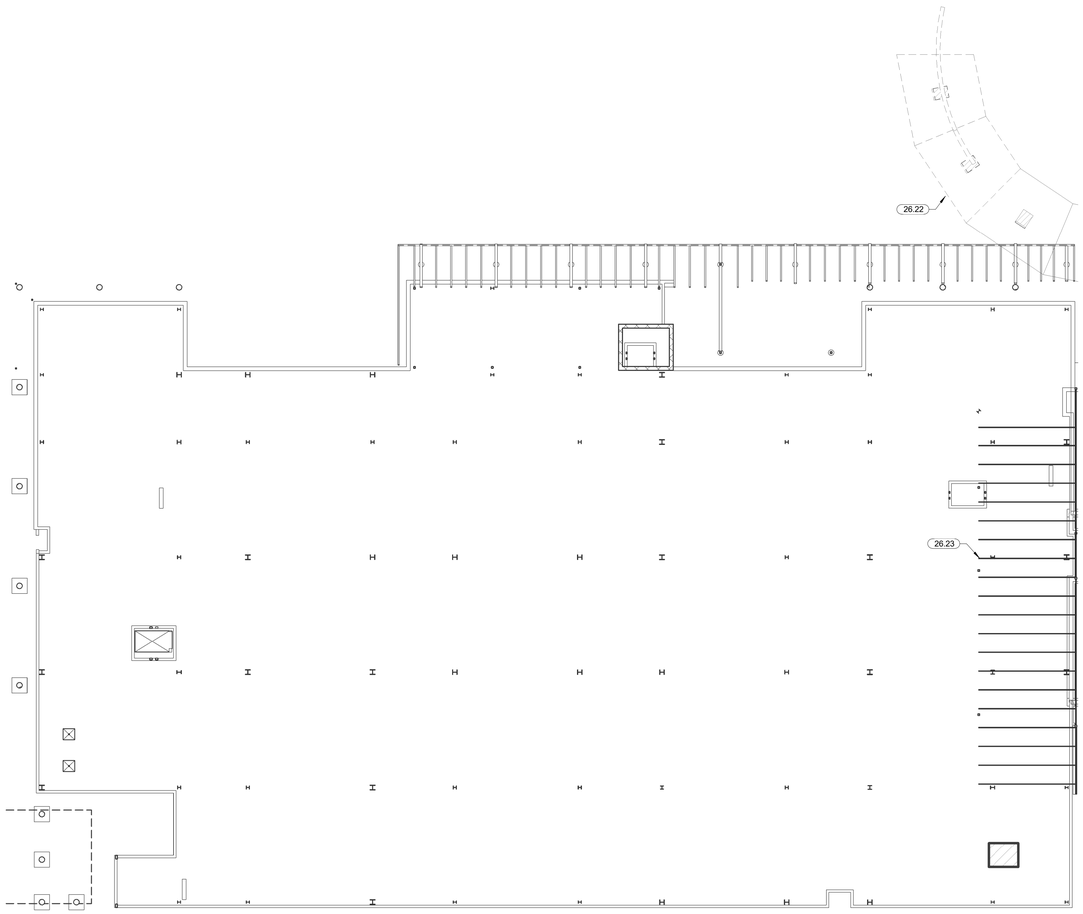

OVERALL ELECTRICAL DEMO PLAN
1/16" = 1'-0"

James R. Childers Architect, Inc.
45 South 4th Street
Fort Smith, AR 72901
479-783-2480
www.childersarchitect.com

PROFESSIONAL SEAL:
LICENSED PROFESSIONAL ENGINEER
Robert Brandon Pinkerton
23042
OKLAHOMA
CASSB(PE) 11-1-19

CONSULTANT LOGO:
HP ENGINEERING
PROJECT NO. 18068R
100 % COMPLETE
HP ENGINEERING INC.
5214 W. VILLAGE PARKWAY
SUITE 120
ROGERS, AR 72758
(479) 899-6370
www.hpengineeringinc.com

CLIENT:
SEAL OF THE CHEROKEE NATION OF OKLAHOMA
SEPT. 6, 1839

WILMA P. MANKILLER HEALTH CENTER EXPANSION
STILWELL, OKLAHOMA

KEY PLAN:

PROJECT PHASE:
BID PACKAGE 01

REVISIONS		
#	DATE	DESCRIPTION

DATE:	JOB NUMBER:
11-1-19	18-01.01

SHEET NUMBER:
DE1.0

OVERALL ELECTRICAL DEMO PLAN