0403

FIRE RESISTANT 4 DRAWER LATERAL FILE

FIREKING®

Total protection for critical business documents.

- UL Class 350 rated at 1,700°F for 1 hour.
- High-security lock resists picking and drilling. Lock all or select drawers with one key.
- Impact, explosion and water resistant.
- Insulated walls reinforced with 14-gauge welded steel wire.
- Accepts letter/legal hanging folders.

MODEL NO.	DESCRIPTION	NO. OF DRAWERS	DIMENSIONS W x D x H	WT. (LBS.)	PRICE EACH		ADD TO CART
					1	2+	
H-6941	Letter/ Legal	4	31 x 22 x 53"	794	$2,679	$2,579	

SOURCE: https://www.uline.com/Product/Detail/H-6941/File-Cabinets-and-Mailroom/Lateral-Fire-Resistant-File-Cabinet-4-Drawer?pricode=WA9763&gadtype=pla&id=H-6941&gclid=EAIaIQobChMI-dej5vjP4AIVhFcNCh26xAUDEAYYASABEgI9F_D_BwE&gclsrc=aw.ds

0438

MEDIA LOCKING STORAGE CABINET

Product Specifications

- **BRAND**Safco®
- **MANUFACTURERS PART NUMBER**4935LG
- **MODEL**250571
- **WIDTH INCHES**37
- **DEPTH INCHES**17-1/2
- **HEIGHT INCHES**27-3/4
- **MINIMUM WIDTH INCHES**37
- **MINIMUM DEPTH INCHES**17.5
- **MINIMUM HEIGHT INCHES**27.75
- **MAXIMUM WIDTH INCHES**37
- **MAXIMUM DEPTH INCHES**17.5
- **MAXIMUM HEIGHT INCHES**27.75
- **COLOR FINISH**Light Gray
- **COLOR FAMILY**Gray
- **CONSTRUCTION**Steel
- **DRAWER QUANTITY**4
- **DESCRIPTION**Storage Cabinet
- OPTIONAL 5” BASE

SOURCE: https://www.globalindustrial.com/p/office/file-cabinets/media/multimedia-stackable-storage-cabinet-light-gray-1?infoParam.campaignId=T9F&gclid=CjwKCAjwycfkBRAFEiwAnLX5IeUHIYxc-JvxbKKU_j3YSa--kcP5oW61lUj4ALWECKiF1gZWw_LRvRoC8sEQAvD_BwE

JUNE 14, 2019

0440

CART, BOOK

SINGLE SIDED 2 SHELF

Material:	18-gauge steel frame, 20-gauge steel shelves
Finish:	Scratch-resistant powder paint finish
Casters:	Four 4" ball-bearing casters
Shelves:	2 slanted shelves
Shelf Dimensions:	24" W x 12" D
Weight Capacity:	115 lbs./shelf
Other Info:	Made from 25-35% post-consumer recycled steel content
Assembly:	Ships assembled
Width:	26"
Depth:	14"
Height:	32"
Distance Between Shelves:	13"
Weight:	27.0 lbs.

SOURCE:
https://www.schooloutfitters.com/catalog/product_info?pfam_id=PFAM2237&products_id=PRO7211

JUNE 14, 2019

1021
Massage Chair

human touch
be your best. feel your best.™

Enter Wellness.

Unlike other massage chairs you may have experienced, the new AcuTouch® 6.1 immerses you in a therapeutic massage that is truly fully encompassing with its 3D Flexglide® 360 massage technology and S-track system. Designed to completely envelop you in wellness, comfort and luxury, this revolutionary chair invites you to experience a remarkable array of therapeutic massage features and smart conveniences. Take a seat in this stylish re-imagination of the utilitarian massage chair, grab the LCD controller, and escape to a world where pain, stress and discomfort are distant memories. Enter the AcuTouch® 6.1. Enter Wellness.

AcuTouch® 6.1
Human Touch® Massage Chair

LCD Controller

JUNE 14, 2019

AcuTouch® 6.1
Human Touch® Massage Chair

1 3D Flexglide® 360 Massage Technology & S-Track System

Every contour of your body is therapeutically massaged by unparalleled flexibility and seamless glide along with an S-track system that follows the natural curve of the spine down to the lower lumbar area of the back.

2 Auto-Immersion Experience

Indulge in nine Human Touch Wellness Council-designed Auto Immersion Programs that focus on full-body, shoulders and lower back, and an effective collection of therapeutic relaxation and recovery programs.

3 Targeted Massage Programs

Remedy those trouble spots and rejuvenate the mind and body with twelve targeted techniques that stretch, loosen and relax specific muscle groups, from the shoulders to the lower back. Set massage zone lengths to 3, 6 or 9 inches.

4 Cloud Touch Massage

Relax as if floating on air while the strategically placed active contours located at the shoulders, hips, seat and arms help to lift, squeeze, manipulate, and massage the body.

5 Foot & Calf Massager With Patented Figure-Eight® Technology

Refreshes and invigorates sore muscles while circulating blood from the feet toward the core of the body.

5-YEAR LIMITED WARRANTY

5-Years Structural
3-Years Parts
1-Year In-Home Service

DIMENSIONS:

Chair Reclined Dimensions:	70"L x 29"W x 32"H
Chair Upright Dimensions:	56"L x 29"W x 45"H
Seat Width:	17"
Product Weight (out of box):	156 lbs.
Maximum Weight Load:	285 lbs.

PART NUMBERS

Black SōfHyde
100-AT61-001

Espresso SōfHyde
100-AT61-002

Human Touch®, LLC
4600 E Conant Street, Long Beach, CA 90808, USA (800) 742-5493

©2018 Human Touch®, LLC. Human Touch is a registered trademark of Human Touch®, LLC. No medical claims are made for the use of this product. Specifications are subject to change.

JUNE 14, 2019

AT6.1_1018

humantouch.com

Endorsed by WORLD FEDERATION OF CHIROPRACTIC

human touch
be your best. feel your best.™

1094

POSTAGE HANDLING BIN/TOTE

As lightweight as corrugated but with the durability of plastic. Holds up to 80 lbs.

- Steel reinforced; welded for strength, won't collapse. Nestable.
- Popular choice for mail and package handling and routing.
- 3 TOTE MINIMUM MAKING COST $33 + SHIPPING

MODEL NO.	COLOR	OUTSIDE DIM. L x W x H	INSIDE DIM. L x W x H	WT. (LBS.)	PRICE PER TOTE (MIN. 3)				ADD TO CART	
					3	12	24	48+		
S-133W	White	18 x 13 x 12"	17 1/4 x 12 3/8 x 11 1/8"	2	$11 each any quantity				3	ADD

SOURCE: https://www.uline.com/Product/Detail/S-133W/Totes-Plastic-Storage-Boxes/Space-Age-Totes-18-x-13-x-12-White?pricode=WB0721&gadtype=pla&id=S-133W&gclid=CjwKCAjwmq3kBRB_EiwAJkNDp3Enz8iYkrCYs3rpzgx6Ic8EWclrp_MWDB6BKAIQA9tqKunaPGM52xoC6dgQAvD_BwE&gclsrc=aw.ds

upholstery

Classic

Durable, vinyl based fabrics, Pedigo Classic upholstery is latex-free and California TB-117 approved.

Indicates: Pedigo Classic upholstery and unit testing:

- California TB-117

Grey | Steel | Beige | Burgundy | Fairway | Lake Blue | Black

PreFixx® | TB-117 COMPLIANT | ✓LATEX-FREE

Royal

Environment friendly, Pedigo Royal upholstery is latex-free, PVC-free, California TB-117 approved.

Indicates: Pedigo Royal upholstery and unit testing:

- California TB-117
- California TB-117 and TB-133 approved

Glacier | River Rock | Cattail | Basalt | Orchard Plum | Columbia Blue | Raven Black

TB-117 COMPLIANT | ANSI/BIFMA X5.1-2002 | ✓LATEX-FREE | ✓PVC-FREE

Above color samples are representations of upholstery materials. Actual colors may vary slightly. Material samples available upon request.

Technical Bulletins The State of California developed a number of testing standards known as Technical Bulletins for the purpose of evaluating the flammability of furniture.

CAL TB-117 Flammability test for the filling or padding material of furniture. Tests the flame retardance of resilient filling materials used in upholstered furniture - including the fabric.

TB-117 COMPLIANT

CAL TB-133 A full-scale fire test of the entire unit including the frame, foam and upholstery.

TB-133 COMPLIANT

- **American National Standard for Office Furnishings**

ANSI/BIFMA X5.1-2002

This standard is intended to provide manufacturers, specifiers, and users with a common basis for evaluating the safety, durability, and structural adequacy of general-purpose office chairs. For example, load and impact testing.

- **Business & Institutional Furniture Manufacturer's Assoc.**

A not-for-profit organization that advocates, informs and develops standards for the North American office and institutional furniture industry.

PreFixx®

Care Instructions

PreFixx® is engineered so that upholstery can be cleaned again and again without showing signs of wear. With easy cleanability, and proven stain and abrasion resistance, PreFixx protective finish can reduce maintenance costs and frequent re-upholstery.

Performance: Offers state-of-the-art resistance against staining, burnishing, abrasion, scuffing and blocking.

Durability: Creates a barrier that resists stains from penetrating to the surface of the vinyl for proven, long-lasting protection. With laboratory-tested stain resistance and improved wear properties, upholstery treated with PreFixx protective finish can retain a "like-new" appearance longer.

Easy Maintenance: Enables most common stains like dirt and smudges to wipe off easily. Many difficult stains like ballpoint ink also can be cleaned with active solvents, such as nail polish remover, without damaging the PreFixx protective finish (when recommended cleaning instructions are followed).

Printed using 100% Green Wind Power

800.822.3501 • FAX 360.696.1700 • www.pedigo-usa.com

Proudly Made in the USA

4000 SE Columbia Way • Vancouver, Washington 98661

JUNE 14, 2019

10/18 MM-73

1335-1336-1339-1340

seating

ergo | anesthesia | chrome | surgeon
five series | stainless steel

five series

(available in ● classic or ● royal upholstery)

weight capacity rating of 300 lbs.

locking casters option
- 66 Locking Casters - (activated upon standing)
- 66-A Locking Casters - (activated upon sitting)

● P-521-GS ● T-521-GS
- 14½" round fully padded seat with back
- 23½" diameter aluminum base
- 2" dual wheel casters
- Height adjustment (pneumatic) of 19¼" to 23¾"
- Adjustable backrest

1335 &1336

● P-526-GS ● T-526-GS
- 14½" round fully padded seat
- 23½" diameter aluminum base
- 2" dual wheel casters
- Height adjustment (pneumatic) of 19¼" to 23¾"

● P-536 ● T-536
- 14" round cushioned seat
- 21½" diameter chrome base
- Easy rolling 2½" casters
- Height adjustment (screw shaft) of 17¾" to 26⅛"

● P-536-GS ● T-536-GS
- 14" cushioned seat
- 21½" diameter chrome base
- Easy rolling 2½" casters
- Height adjustment (pneumatic) of 18¾" to 23½"

* locking casters option not available

* locking casters option not available

1339

● P-551 ● T-551
- 16" x 17" cushioned seat
- 21½" diameter chrome base
- Adjustable back support
- Easy rolling 2½" casters
- Height adjustment (screw shaft) 20⅝" to 29"
- Adjustable backrest

* locking casters option not available

● P-551-GS ● T-551-GS
- 16" x 17" cushioned seat
- 21½" diameter chrome base
- Adjustable back support
- Easy rolling 2½" casters
- Height adjustment (pneumatic) of 19¼" to 24" height
- Adjustable backrest

* locking casters option not available

1340

● P-555-GS ● T-555-GS
- 16" x 17" cushioned seat
- 21½" diameter chrome base
- Adjustable back support
- Easy rolling 2½" casters
- Height adjustment (pneumatic) of 25⅝" to 33"
- Adjustable backrest

* locking casters option not available

ergo task anesthesia chair

(only available in ● royal upholstery)

weight capacity rating of 300 lbs.

Pedigo proudly introduces our NEW ergonomically designed anesthesia chair, the T-583. This chair features pneumatic height adjustment, dual wheel casters, 5-star base, integrated lumbar support and independent backrest/seat pan height tilt controls. PVC and latex free.

locking casters option
- 81 Locking Casters - (activated upon standing)

● T-583
- 18" x 19" contoured cushioned seat
- Pneumatic height adjustment of 24¼" to 34¼"
- Easy rolling 2" dual wheel casters
- Adjustable arm rests
- 25" diameter footprint
- Adjustable backrest

● T-584 (without arm rests)
- 18" x 19" contoured cushioned seat
- Pneumatic height adjustment of 23½" to 33½"
- Easy rolling 2" dual wheel casters
- 25" diameter footprint
- Adjustable backrest

specs

SEVEN
FLIP TABLES

watson

JUNE 14, 2019

RELENTLESSLY SIMPLE

Seven Flip tables provide highly robust worksurfaces that can be flipped and nested to instantly repurpose any room. The integrated design includes a proprietary flip mechanism, cable management and limitless power options.

ENDLESS POSSIBILITIES

A smart selection of worksurface shapes, sizes and base styles ensure that Seven Flip tables work for your team, on your terms.

LIFETIME WARRANTY

Seven Flip tables are built for high-volume use. The proprietary roller bearing lock mechanism has been rigorously tested and is warrantied for life.

SPACE SAVER

The best-in-class nesting footprint minimizes storage space - for those in-between times when they aren't being used.

BALANCED AND EFFORTLESS

Designed for function, engineered for strength, and built for durability, Seven Flip tables are a lasting asset.

The optional Modesty panel self centers when tilted and may be quickly removed without tools.

Surface depths:
20" , 24" & 30" D

Surface widths:
48"- 96" W

Propriety low-friction, steel tilting mechanism

Five modular power options

Optional undersurface ganging clips lock adjacent tables together

Edge Styles

- 90
- 90 Trim
- 90 Ply
- Knife
- Knife Trim
- Knife Ply

Locking Casters

Integrated cable drop inside leg

Welded steel base design contains no plastic pieces to break or fall off

Two Base options:

Full Base provides ample cross-table seating for theater-style training.

Inset Base provides maximum perimeter seating.

CONVENIENCE POWER

There are five standard configuration options for power and data and preconfigured cutouts are available for all compatible Byrne power units.

INTEGRATED CABLE DROP

Power infeeds cleanly route through the leg to minimize visual clutter and eliminate tripping hazards.

Seven Flip Tables Work For Your Team.

9AM THEATER KEYNOTE

KIT OF PARTS

- 6 Rectangles
- 6 Trapezoids
- 3 Etch Boards

12PM COLLABORATIVE BREAKOUT

KIT OF PARTS

- 6 Rectangles
- 6 Trapezoids
- 3 Etch Boards

3PM ROUNDTABLE DEBRIEF

KIT OF PARTS

- 6 Rectangles
- 6 Trapezoids
- 3 Etch Boards

watson

JUNE 14, 2019

26246 Twelve Trees Lane NW, Poulsbo, WA 98370
800.426.1202 **watsonfurniture.com**

©2016 WATSON. ALL RIGHTS RESERVED. NOV 2016

DALLAS MIDWEST®
A National Business Furniture Company

8OO-527-2417

In Stock

Adjustable Height Folding Table 36x96 Honeycomb Top

Brand: KI Furniture

VItem No: D41545

$275 List: $384

Table Top Colors

Frame Colors

1405a

MAIL SORTING CABINET WITH TABLE & STORAGE & 30 UPPER COMPARTMENTS

Product details

Organize the mailroom with this black Marvel mail sorter station.

Keep mail supplies in order with this mail sorter unit. The large work surface provides plenty of room to use when sorting mail and other papers, and 30 small compartments and two storage shelves make organization simple. This Marvel mail station is made of heavy-duty steel to ensure a long service life.

- **Mail sorter with 30 equal size sorting slots for documents and adjustable work surface**
- **Overall dimensions: 80"H x 42"W x 16"D**
- **Heavy-duty steel construction with textured black powder coating**
- **Each slot measures: 2"H x 9"W x 16"D**
- **Work surface adjusts from 24.5" to 39.5" high in 3" increments**
- **Work surface measures 39"W x 25"D**
- **Two under work surface storage shelves as an additional storage space**

Specifications

Color Family	**Black**
Literature & Mail Sorter Length	**80"**
Literature & Mail Sorter Type	**Mail Sorters**
Sorter Number of Compartments	**21 to 30**
Literature & Mail Sorter Width	**42"**

SOURCE: https://www.staples.com/Marvel-Mailroom-80-x-42-x-16-30-Mail-Sorter-Stations-W-Work-Surface/product_SS2589761

JUNE 14, 2019

1809

GAMING CHAIR IN ORANGE & BLACK

• Seat Depth 18.8 inches • Adjustable Arm Height Yes • Adjustable Seat Height Yes • Armrests Included Yes • Seat Material Leather, Mesh • Cup Holder(s) No • Maximum Weight Capacity 299 pound	• Product Name-High-Back Ergonomic Swivel Gaming Chair • Brand-CorLiving • Product Width 29 inches • Product Height 50 inches • Product Depth 27 inches • Product Weight 42 pounds • Backrest Material Leather, Mesh • Backrest Height 33.5 inches • Backrest Width 22 inches

SOURCE: https://www.bestbuy.com/site/corliving-high-back-ergonomic-gaming-chair-black-mesh-orange/6328710.p?skuId=6328710

JUNE 14, 2019

1812 INDOOR TENNIS TABLE

Amp up the competition in your game room with the Prince Tournament 6800 Indoor Table Tennis Table. This indoor table is designed with a MDF table top to provide you with optimal bounce, a box steel apron for durability, and easy-access accessory storage. It comes 50% pre-assembled, making for simple setup- the average assembly time for two people just 90 minutes! Includes net and clip set.

DESIGN

- Tournament table tennis table
- For indoor use only
- Average 2-person assembly time is 90 minutes
- 18mm MDF table top for optimal bounce
- Matte grey finish
- 2" box steel apron
- Swivel wheels with locking casters for safe transport

SPECS

- Table Dimensions: 108”L x 60"W x 30"H
- Storage Dimensions: 32"L x 60"W x 62"H
- Playback Dimensions: 70”L x 60”W x 62”H
- Wheel diameter: 3"

TECHNOLOGY

- Leg levelers and bumper corners for stability and protection
- Easy-access paddle and ball storage holds up to 6 balls and 2 rackets on each side
- Playback capabilities
- Comes 50% preassembled- including apron, casters, legs, accessory holder, brackets, and pre-drilled holes
- Packaging Dimensions: 63” L x 58” W x 6” H

Additional Details

- Includes Pro Net & Clip Set
- Rackets and table tennis balls not included

Price ranges from $600 to $800

SOURCES:

https://www.dickssportinggoods.com/p/prince-tournament-6800-indoor-table-tennis-table-18prcuprnctrnmntnstg/18prcuprnctrnmntnstg

OR

https://www.totaltabletennis.com/prince

JUNE 14, 2019

1816 & 1817

UMBRELLA STAND & UMBRELLA WET BAG STAND

#1817

Triangular umbrella stand offers a large capacity, holds up to twelve umbrellas. Clever umbrella cut-out design on the sides provide excellent ventilation and speeds up drying time. Equipped with a water retainer. Three interior hooks to hang pocket umbrellas. No tools required for assembly.

Product Specifications

WIDTH INCHES	10-1/4
DEPTH INCHES	10-1/4
HEIGHT INCHES	23-2/3
CAPACITY	12 Umbrellas
COLOR FINISH	Black
BRAND	Alba
CONSTRUCTION	Metal/Plastic
DESCRIPTION	Triangular Umbrella Stand
MANUFACTURERS PART NUMBER	PMTRIA2N

SOURCE: https://www.globalindustrial.com/p/office-school-supply/racks/umbrella-stands-and-holders/triangular-umbrella-stand-black

#1816

As visitors enter indoor areas offer the ultimate solution to managing dripping wet umbrellas.

It holds 200 bags on each of 2 sides and has a stable heavy weighted base. An optional sign, [S117BK], that must be ordered at the same time as the bag holder

Features & Benefits:

Floor standing model - designed to accept optional sign
400 bag capacity

Two sided

All aluminum construction

Satin black, baked, powder coat finish

Rust, corrosion, tarnish, and scratch resistant

Quick ship

Made in the USA

Product Specifications

-
  - **BRAND** Glaro
  - **MANUFACTURERS PART NUMBER** FVBS11BK
  - **HEIGHT INCHES** 43
  - **COLOR FINISH** Satin Black
  - **WEIGHT LBS** 24
  - **FOR USE WITH** UB100, UB1000, S117BK
  - **PACKAGE QUANTITY** 1

SOURCE: https://www.globalindustrial.com/p/packaging/bags/specialty-bags/floor-standing-satin-black-wet-umbrella-bag-holderwith-optional-sign-mount

Swingline® High Capacity Electric Stapler, 70 Sheets, Black

S7069270

Product Description

Electric stapler with an engine that is built for speed and performance can handle virtually any size staple job. Stands up to frequent daily use to get the job done right every time.

Each information

Depth	14.3"
Width	5.7"
Height	9.82"
Gross weight	7.40lbs
UPC#	074711692700
Unit quantity	1

Case information

Depth	14.5"
Width	10.25"
Height	6"
Gross weight	7.50lbs
UPC#	50074711692705
Unit quantity	1

Shipping Information

Country of origin	??
Minimum Order Quantity	1
Warranty Period	12
Lowest possible unit	Case

General information

Color	Unknown
Moore #	69270E
Recycled %	0
MSDS Required	N
Layer/Pallet	6
Cases/Layer	8

Features

- Easy-to-use precision alignment guide ensures accuracy
- 70 sheet stapling capacity using simple staple cartridge, comes pre-packed with 5,000 staples
- Durable construction; suction cup feet provide stability
- Flat clinch stapling design allows for neater stacking of stapled papers
- Limited 2 year warranty & 100% Performance Guarantee

Specifications

- **Detailed Color** Black
- **Performance Guarantee** Yes
- **Sheet Capacity (20 lb paper)** 70
- **Staple Capacity** 5,000
- **Tacking Ability** No
- **Warranty** Limited 2-year

Printed on 3/21/2019 Confidential and proprietary to ACCO Brands. Images are for illustrative purposes only. Errors and omissions excepted.

Swingline® Commercial Electric Punch, 3 Holes, 8 1/2" Centers, 28 Sheets

A7074535

Product Description

High performance, 3-hole electric punch with fixed punch heads is fast and reliable, ideal for high volume projects and use in shared workspaces.

Case information

Depth	19.6"
Width	10.3"
Height	7"
Gross weight	10.85lbs
UPC#	50050505745352
Unit quantity	1

Case information

Depth	19.6"
Width	10.3"
Height	7"
Gross weight	10.85lbs
UPC#	50050505745352
Unit quantity	1

Shipping Information

Country of origin	??
Minimum Order Quantity	1
Warranty Period	24
Lowest possible unit	Case

General information

Color	PLATINUM
Recycled %	0
MSDS Required	N
Layer/Pallet	6
Cases/Layer	10

Features

- Push button 3-hole electric punch makes hole punching effortless
- Ideal for heavy use
- 28 sheet paper punch capacity
- Smooth, quiet operation
- Built-in chip tray
- Fixed punch heads, 9/32" holes
- Limited 2-year warranty & 100% Performance Guarantee

Specifications

- **Centers** 8 1/2"
- **Detailed Color** Platinum
- **Number of Punch Holes** 3
- **Performance Guarantee** Yes
- **Punch Hole Size** 9/32"
- **Punching Capacity** 28
- **Warranty** Limited 2-year

Other information

- **Dimensions** 16 1/2"L x 6"D x 10"H
- **Size** 3 HOLE

Printed on 3/21/2019 Confidential and proprietary to ACCO Brands. Images are for illustrative purposes only. Errors and omissions excepted.

1822

PAPER CUTTER

17" Heavy Duty Commercial Paper Cutter. This all steel heavy-duty and convenient Paper Cutter Machine is perfect for cutting any size under Ledger paper, thick books, menu, magazines, etc. It can cut up to 400 sheets of paper each time, which is very time-saving for cutting thousands pieces of paper.

Features:

- Brand New in Retail Package and Ready to Ship
- All Heavy Duty Steel Base
- Easy Control Cutting Handle Bar
- Clamp Wheel for Better Holding thicker paper
- Ruler in Inches and Clear Embossed Grid for Precise Cutting
- Adjustable Backstop with Lock for Holding Paper Well
- Rubber Feet for Desktop Use

Speficications:

- Base Size: 26 5/16" x 21 6/16" x 2 1/16"
- Overall Size: 28 12/16" x 24 7/16" x 13 3/16" (Including Cutting Bar)
- Maximum Cutting Width: 17"
- Best Cutting Size: Under Ledger Paper
- Maximum Cutting Capacity: 400 Sheets (for 2.85oz Ledger Paper)

Package Includes:

- 1x Desktop 400 sheets Paper Cutter
- 1x User Manual

SOURCE: https://www.walmart.com/ip/Yescom-400-Sheet-Capacity-Industrial-Guillotine-Paper-Trimmer-Cutter-Stack-Heavy-Duty-Steel-Base/192645733

1830

FLAG SET INCLUDING U.S., OK, CHEROKEE NATION FLAGS

SKU: BNDL_KUSA35I X 1 +

MPN: BUNDLE

BNDL_KINO X 2

MPN: BUNDLE

+

SKU: SOK35N X 1

MPN: 021302

The Super Tough Indoor American Flag, Flagpole, Base & Tassel available at Online Stores comes with a gold cord and tassel and is sold with your choice of either a 7-foot, 8-foot or 9-foot pole. Whether you choose the 100% cotton or weather-resistant nylon fabric, your flag will have sewn stripes and embroidered stars. Gold rayon fringe outlines three sides of the USA flag. Select from a choice of six different pole toppers for your indoor flag pole and base. Get it with free shipping when you order from Online Stores.

Features:

- US flag 3ft x 5ft 100% nylon
- Embroidered stars
- Sewn stripes
- Suitable for indoor and parade use
- Includes gold rayon fringe
- 7ft or 8ft (9ft option $10 extra) gloss varnished 1 1/4" oak two-piece pole with aluminum fitting
- Your choice of pole topper: choose from a Metal Gold Eagle, Gold Plastic Spear, Gold Metal Spear ($10 Extra Cost), Metal Army Spear ($10 Extra Cost), Gold Metal Parade Ball ($10 Extra Cost), or Metal Texas Star ($10 Extra Cost)
- Gold cord and tassel
- Unweighted high gloss gold finish ABS floor stand
- Don't forget your flag spreader to ensure a proper display of your new flag (Flag Spreader Sold Separately)

Nylon flag is made in the U.S.A.

SOURCE: https://www.united-states-flag.com/indoor-american-flag-flagpole-base-tassel.html

*****CHEROKEE NATION FLAG SOURCE TO BE IDENTIFIED

JUNE 14, 2019

2254-2254a-2254b-2254c-2254d

OPEN WIRE MOBILE CARTS

MOBILE CART 2254 VARIOUS SIZES WITH BUMPER GUARDS

MOBILE CART 2254a WITH BUMPER GUARDS & DRAWER SYSTEM

MOBILE LINEN CART 3005 WITH BUMPER GUARDS

2254c PREFER MOBILE WITH BUMPER GUARDS 72” WIDE

2254d 36” WIDE MOBILE CART WITH BUMPER GUARDS

EQUIPMENT #2265

FOR ENVIRONMENTAL SERVICE SATELLITE ROOMS

Stainless Steel Wall Mounted Shelf, 12" x 36" Shelf

Item #: T97B359368
Sold By: globalindustrial.com

- All welded 16 gauge 304 series stainless steel construction.
- Comes with 2-4 wall brackets depending on the length.

Product Specifications

-
  - **accessory_type**Shelf
  - **NSF**Yes
  - **UNIT TYPE**Wall Mounted Shelf
  - **BRAND**Win Holt
  - **ACCESSORY WIDTH INCHES**12
  - **ACCESSORY LENGTH INCHES**36
  - **USDA**Yes

2291b

TASER STORAGE CABINET

4 Compartment Taser and Pistol Locker

Four secure individual compartments for pistols or tasers with accessories. 16 gauge steel construction and rubber matting inside makes these the perfect compact storage. System units can be stacked and fastened to each other or can be used on top of our weapon lockers for long guns

2x2 Formation

- Model Number: E1-918-05
- 2x2 Formation: 14”W x 12.5”H x 15”D

SOURCE: http://www.seksolutions.com/taser-storage.html

	XTRA™ CARTS: 4091 UTILITY CART		XTRA™ CARTS: 4096 UTILITY CART		XTRA™ CARTS: 4092 UTILITY CART		XTRA™ CARTS: 4093 UTILITY CART		XTRA™ EQUIPMENT CART: 4095 UTILITY CART		XTRA™ INSTRUMENT CART: 4094 UTILITY CART		EXECUTIVE SERVICE CART		CONVERTIBLE CART	
	WEIGHT CAPACITY	DIMENSIONS	WEIGHT CAPACITY	DIMENSIONS	WEIGHT CAPACITY	DIMENSIONS	WEIGHT CAPACITY	DIMENSIONS	WEIGHT CAPACITY	DIMENSIONS	WEIGHT CAPACITY	DIMENSIONS	WEIGHT CAPACITY	DIMENSIONS	WEIGHT CAPACITY	DIMENSIONS
	300 LBS.	40.6" (L) X 20.0" (W) X 37.8" (H)	300 LBS.	40.6" (L) X 20.0" (W) X 51.0" (H)	300 LBS.	40.6" (L) X 20.0" (W) X 37.8" (H)	300 LBS.	40.6" (L) X 20.0" (W) X 37.8" (H)	300 LBS.	40.6" (L) X 20.75" (W) X 37.8" (H)	300 LBS.	40.6" (L) X 20.0" (W) X 37.8" (H)	300 LBS.	39" (L) X 21" (W) X 38" (H)	400 LBS.	45.2" (L) X 23.8" (W) X 34.4" (H)
AVAILABLE COLORS	BLACK, GRAY, OFF-WHITE		BLACK		OFF-WHITE		BLACK, OFF-WHITE		BLACK		GRAY		BLACK, PLATINUM		BLACK, RED	
HANDLE STYLE	ANGLED, ERGO. CURVED		ANGLED, ERGO. CURVED		ANGLED, ERGO. CURVED		ANGLED, ERGO. CURVED		ANGLED, ERGO. CURVED		ANGLED, ERGO. CURVED		FLAT, ERGO. CURVED		FLAT, ERGO. CURVED	
MATERIAL	STRUCTURAL WEB POLYPROPYLENE METAL UPRIGHTS		STRUCTURAL WEB POLYPROPYLENE METAL UPRIGHTS		STRUCTURAL WEB POLYPROPYLENE METAL UPRIGHTS		STRUCTURAL WEB POLYPROPYLENE METAL UPRIGHTS		STRUCTURAL WEB POLYPROPYLENE METAL UPRIGHTS		STRUCTURAL WEB POLYPROPYLENE METAL UPRIGHTS		STRUCTURAL WEB POLYPROPYLENE		HIGH-PRESSURE POLYPROPYLENE	
STORAGE CONFIGURATION	–		–		–		–		LOCKABLE DOORS		LOCKABLE DOORS SLIDING DRAWER		–		–	
CASTER OPTIONS	TPR QUIET, NON-MARKING		TPR QUIET, NON-MARKING		TPR QUIET, NON-MARKING		TPR QUIET, NON-MARKING		TPR QUIET, NON-MARKING		TPR QUIET, NON-MARKING		TPR QUIET, NON-MARKING		TPR (2 FIXED, 2 SWIVEL) QUIET, NON-MARKING	
CASTER SIZE	4"		4"		4"		4"		4"		4"		4"		5"	
LOCKING CASTERS															•	
ENCLOSED SIDE PANELS (2)					•		•		•							
ENCLOSED BACK PANEL							•		•							
ACCESSORIES																
REFUSE BIN (8 GAL.)	•		•		•		•		•		•		•			
UTILITY BIN (4 GAL.)	•		•		•		•		•		•		•			
UTILITY SLIDING DRAWER	•		•		•		•		•		•					

	SERVICE CARTS: 9T65-71 UTILITY CART		SERVICE CARTS: 3421 UTILITY CART		SERVICE CARTS: 3424-88 UTILITY CART		SERVICE CARTS: 3355-88 UTILITY CART		SERVICE CARTS: 3457 UTILITY CART	
	WEIGHT CAPACITY	DIMENSIONS	WEIGHT CAPACITY	DIMENSIONS	WEIGHT CAPACITY	DIMENSIONS	WEIGHT CAPACITY	DIMENSIONS	WEIGHT CAPACITY	DIMENSIONS
	100 LBS.	31.5" (L) X 16.3" (W) X 36" (H)	150 LBS.	33.6" (L) X 18.6" (W) X 36.6" (H)	200 LBS.	33.6" (L) X 18.6" (W) X 37.8" (H)	300 LBS.	31" (L) X 18" (W) X 37.5" (H)	200 LBS.	33.6" (L) X 18.6" (W) X 37.8" (H)
AVAILABLE COLORS	BEIGE		BLACK, PLATINUM		BLACK, PLATINUM, OFF-WHITE, RED, GREEN, BLUE		PLATINUM		BLACK	
HANDLE STYLE	UPRIGHT		ANGLED, ERGO. CURVED		ANGLED, ERGO. CURVED		ANGLED, ERGO. CURVED		ANGLED, ERGO. CURVED	
MATERIAL	STRUCTURAL WEB POLYPROPYLENE METAL UPRIGHTS		STRUCTURAL WEB POLYPROPYLENE		STRUCTURAL WEB POLYPROPYLENE METAL UPRIGHTS		STRUCTRUAL WEB POLYPROPYLENE		STRUCTURAL WEB POLYPROPYLENE	
STORAGE CONFIGURATION	–		–		–		–		LOCKABLE DOORS SLIDING DRAWER	
CASTER OPTIONS	TPR QUIET, NON-MARKING		TPR QUIET, NON-MARKING		TPR QUIET, NON-MARKING		TPR QUIET, NON-MARKING		TPR QUIET, NON-MARKING	
CASTER SIZE	3"		3"		4"		4"		4"	
LOCKING CASTERS										
ENCLOSED SIDE PANELS (2)	•		•						•	
ACCESSORIES										
ENCLOSED BACK PANEL										
REFUSE BIN (8 GAL.)			•		•		•		•	
UTILITY BIN (4 GAL.)			•		•		•		•	

CASTERS		
CASTER TREAD MATERIAL		TPR (THERMOPLASTIC RUBBER)
CASTER SIZE		4"
CASTER TYPE (QTY.)		2 SWIVEL; 2 FIXED
FLOOR SURFACES	**EXCELLENT**	ASPHALT, BRICK, CARPET, CONCRETE, LINOLEUM/TILE, TERRAZZO, AND WOOD
	GOOD	STEEL (RIBBED AND SMOOTH)
	FAIR	–
OPERATING CONDITIONS	**EXCELLENT**	METAL SCRAPS (SMALL OR LARGE)
	GOOD	WATER, STEAM, OR ANIMAL FATS
	FAIR	MILD OR HARSH CHEMICALS, OIL & GREASE
REPLACEMENT ITEM #		FG3424L60000 4" SWIVEL CASTER KIT
ADDITIONAL INFORMATION		TPR CASTERS ABSORB SHOCK AND PROVIDE FLOOR SURFACE PROTECTION AND QUIET OPERATION. CHEMICAL AND WATER RESISTANT.

SERVICE CARTS
SELECTION GUIDE

RCP-385
#141734
©2015 Rubbermaid Commercial Products LLC
8900 Northpointe Executive Drive, Huntersville, NC 28078

To see our complete range of material handling solutions visit our online catalog at **rubbermaidcommercial.com**

Rubbermaid® Commercial Products

2405

PLATFORM TRUCK (CART) WITH HANDLE

FOR TRANSPORTING WATER & SUPPLIES

Product Specifications

- **LENGTH INCHES**28
- **WIDTH INCHES**18
- **CAPACITY LBS**400
- **COLOR FINISH**Gray
- **ASSEMBLY**Assembled
- **BOLT SPACING**Caster Mounting Hole Spacing = 3.86" x 2.2"; Hole Dia. = 0.41"
- **BRAND**Global Industrial™
- **CASTER SIZE**Caster Plate = 3.14" x 4.75
- **CONSTRUCTION**Steel
- **DECK HEIGHT INCHES**5-1/2
- **DECK LENGTH INCHES**23
- **DECK WIDTH INCHES**18
- **HANDLE HEIGHT INCHES ABOVE FLOOR**33
- **LIMITED WARRANTY**1 Year
- **WEIGHT LBS**25
- **WHEEL DIAMETER INCHES**4
- **WHEEL TYPE**Rubber

SOURCE: https://www.globalindustrial.com/p/material-handling/platform-trucks/folding/folding-platform-truck-with-solid-steel-deck-400-lb-capacity

JUNE 14, 2019

2406

UTILITY 2 SHELF CART FOR TRANSPORT OF BOXES, TOTES, ETC…

Rubbermaid® Commercial RCP452500BK Flat Shelf Utility Cart,2-Shelf,25-1/4w x 44d x 38-1/8h

Won't rust, dent, chip or peel. Lightweight for easy maneuverability and quiet operation. No sharp edges to nick walls or furniture. Flat shelves provide a smooth worksurface and allow easy loading. Compatible with Optional Refuse/Utility Bins, Rubbermaid® Commercial Optional Utility Cart Refuse/Utility Bin and Rubbermaid® Commercial Utility Bin (sold separately). Color: Black; Capacity (Weight): 500 lbs.; Caster/Glide/Wheel: Two 5" Swivel Non-Marking Casters.

Product Specifications

- **LENGTH INCHES**44
- **WIDTH INCHES**25
- **HEIGHT INCHES**33
- **CAPACITY LBS**500
- **COLOR FINISH**Black
- **ASSEMBLY**Unassembled
- **BRAND**Rubbermaid®
- **CONSTRUCTION**Plastic
- **LIMITED WARRANTY**1 Year
- **MANUFACTURERS PART NUMBER**FG452500BLA
- **REFERENCE** #4525
- **SHELF LENGTH INCHES**37
- **SHELF QUANTITY**2
- **SHELF TYPE**Flat
- **SHELF WIDTH INCHES**25
- **STYLE**Flat Top Shelf/Tray Bottom Shelf
- **WHEEL DIAMETER INCHES**5
- **WHEEL TYPE**Rubber

SOURCE: https://www.globalindustrial.com/p/material-handling/trucks-carts/plastic-shelf-carts/cart-utility-flat-bk3

JUNE 14, 2019

2451

4 WHEELED FLAT DOLLY

HARDWOOD DOLLY WITH SOLID DECK

Seasoned hardwood Poplar, smoothly finished with flush top bolted construction. The wood is sterilized and baked at high temperatures and then a coat of varnish is applied to it. Four swivel hard rubber casters.

Product Specifications

- **LENGTH INCHES**24
- **WIDTH INCHES**16
- **HEIGHT INCHES**5
- **CAPACITY LBS**1000
- **COLOR FINISH**Brown
- **ASSEMBLY**Unassembled
- **BRAND**Global Industrial™
- **CONSTRUCTION**Wood
- **LIMITED WARRANTY**1 Year
- **STYLE**Solid Deck
- **WEIGHT LBS**11
- **WHEEL DIAMETER INCHES**3
- **WHEEL TYPE**Rubber

SOURCE: https://www.globalindustrial.com/p/material-handling/hand-trucks-dollies/dollies-wood/hardwood-dolly-with-solid-deck-24-x-16-1000-lb-capacity?unbxdSuggestion=SUGGESTION%20-%20Hardwood%20Dolly%20with%20Solid%20Deck%2024%20x%2016%201000%20Lb.%20Capacity&q=dolly

JUNE 14, 2019

2455

CONVERTIBLE HAND TRUCK (DOLLY)

Wesco® Spartan Jr. 2-in-1 CONVERTIBLE HAND TRUCK

This convertible, multi-position hand truck provides the functionality of a lightweight hand truck and a 4 wheel platform truck. Smooth and easy transition from 2 to 4 wheel position by pressing the release bar. 10" wheels and 5" polyurethane swivel casters for easy mobility. 18" wide cast aluminum noseplate for larger loads. Shipped ready to assemble.

Product Specifications

- **WIDTH INCHES**22
- **ASSEMBLY**Unassembled
- **BRAND**Wesco®
- **CONSTRUCTION**Aluminum
- **FRONT CASTER**5" x 1-1/4" Polyurethane
- **HAND TRUCK CAPACITY LBS.**500
- **HAND TRUCK HEIGHT INCHES**52
- **MANUFACTURERS PART NUMBER**SPTN-JR-T18-SR
- **PLATFORM TRUCK BED LENGTH INCHES**38
- **PLATFORM TRUCK BED WIDTH INCHES**12
- **PLATFORM TRUCK CAPACITY LBS.**1000
- **PLATFORM TRUCK HEIGHT INCHES**40
- **PRODUCT FAMILY**2 in 1 Hand Truck
- **STYLE**Spartan
- **TYPE**Junior
- **WEIGHT LBS**50
- **WHEEL DIAMETER INCHES**10
- **WHEEL TYPE**Rubber

SOURCE: https://www.globalindustrial.com/p/material-handling/hand-trucks-dollies/hand-trucks-convertible/jr-aluminum-2-in-1-hand-truck-rubber-wheels-987051

JUNE 14, 2019

2505

BULLETIN BOARD

BestRite's Rubber-Tak Tackboard with Aluminum Frame is made of 100 percent recycled rubber, so it's tough enough to use in your high-traffic areas like hallways and gymnasiums. The rubber absorbs sound and shock better than typical cork tackboards. An attractive textured surface won't show pinholes and resists moisture, mildew and fading. Choose from two colors.

SPECIFICATIONS

Surface:	Rubber
Frame Style:	Anodized aluminum
Width:	4'
Height:	4'
Assembly:	Installation required
Weight:	24.5 lbs.
Shipping Method:	Freight
Note:	This item is custom, sorry no returns

SOURCE:
https://www.schooloutfitters.com/catalog/product_info/pfam_id/PFAM38537/products_id/PRO10258

2522

MOBILE MARKER BOARD

Specifications

Material : Aluminum	**True Color** : Black	**Height in Inches** : 39
Width in Inches : 27.5	**Frame Style** : Fixed	**Leg Style** : With Casters
Storage Tray or Shelf : Includes open storage tray	**Adjustable Height Min to Max Inches** : 44 - 75.25	**Easel Type** : Dry/Wet Erase
Customizable : No		
Weight : 36.52 lbs. per Each		

SOURCE: https://www.staples.com/MasterVision-Easy-Clean-Dry-Erase-Mobile-Pres-Easel-Black-Silver/product_230262

JUNE 14, 2019

2602

TECH INDUSTRIAL STOOL

Mayline's Technical Mobile stool perfect for technical applications, Height Adjustable Tables, IT and drafting workstations. Comfortable molded seat with height adjustment and chrome foot ring. Ships in 2-3 Business Days.

- Molded Polyurethane Seat provides Sculpted Comfort and Support
- Backless Design for Mobility
- Chrome Foot Ring with twist and lock height adjustment
- Durable easy-to-clean seat
- Adjustable seat height for application flexibility
- Works well with Tech-Works and Height Adjustable Tables
- Meets ANSI/BIFMA Performance Criteria
- Ships Free by UPS
- **10 % bulk discount in cart for 4 or more stools**

Specifications:

- Dimensions 18.75" x 17.5" x 21.75"-31.25"

SOURCE: https://www.officechairsusa.com/technical-stool/?utm_source=bing&utm_medium=cse&utm_term=2411&msclkid=0362b2bb0aeb10d18d7bee03eb86ce5e&utm_campaign=Branded_Shopping_Desktop&utm_content=All%20Products#sthash.mucS6tMw.dpbs

2602a

FOLDING STOOL FOR MAIL ROOM

Alera® Plus™ IL series Height adjustable folding stool in black color is used to set your desired height within 10" range and has non-marring rubber sleeved legs to provide stability.

Alera® Plus™ IL series Height adjustable folding stool in black color has soft foam seat and back with easy care vinyl upholstery for comfort. Stool has welded tubular steel construction with reinforced hinges to provide strength and durability.

- Black fabric-backed vinyl-upholstery
- Armless
- Overall dimensions: 24 1/2"- 34 1/2"(H) x 20"(W) x 22"(D)
- Easy tools-free seat height adjustment sets your desired height in a 10" range within seconds
- Black welded tubular steel frame with a powder coat finish and glides
- Seat size: 16" - 26"(H) x 16"(W) x 10 1/2"(D), Back size: 9"(H) x 14"(W)
- Weight rated up to 300 lbs.
- Meets or exceeds ANSI/BIFMA standards
- Fully assembled
- Agile design delivers unique ergonomics, comfort and versatility in various tasks
- Foldable for fast set-up and compact storage
- Welded tubular steel construction with reinforced hinges offers superior strength and durability while non-marring rubber sleeved legs provide stability

SOURCE: https://www.staples.com/Alera-Plus-IL-Series-Height-Adjustable-Fabric-Backed-Vinyl-Folding-Stool-Black/product_AAPCS612?cid=PS:GooglePLAs:AAPCS612&ci_src=17588969&ci_sku=AAPCS612&KPID=AAPCS612&gclid=EAIaIQobChMIpZbMqKC34QIVBYbICh3xsAOTEAQYFyABEgKrGvD_BwE

JUNE 14, 2019

2603

TECH WORKBENCH

WILL REQUIRE POWER AND DATA TO SUPPLY BENCH TOP

TechWorks - 72"W Fully Loaded Typical

TechWorks technology furniture includes benches, organizer frames and accessories that can be configured in any number of ways to meet different tasks and keep pace with evolving technologies.

- 72"W X 30"D Table w/Lam
- 72"W x 48"H Upper Frame
- 48"W x 18"D Lam. Fixed Shelf
- Retractable Keyboard/Mouse Platform
- Full Base Shelf 72"W x 23"D
- 24"W x 3"H Part Bin Panels
- 24"W Lockable Storage Bin
- 48"W 15amp Power Strip
- 72"W Task Light (48"H Frames)
- 24"W x 24"H Pegboard
- 72"W Wire Cable Basket
- 24"W x 24"H Whiteboard

SOURCE: https://www.mayline.com/product-detail.php?id=P1088

2609

34 IN CLOSET ORGANIZER / TOOL HOLDER KIT, GRAY

SKU: FG199300GRAY

Helps increase productivity and efficiency through better tool storage and access

- S-hooks holds 5/8" to 1 1/4" (16 cm to 32 cm) handle diameters
- Deep double hooks afford easy accessibility
- Clip holder for work notes and instructions

DETAILS

Helps increase productivity and efficiency through better tool storage and access. S-hooks hold 5/8" to 1 1/4" (1.6 cm to 3.2 cm) handle diameters. Deep double hooks afford easy accessibility. Clip holder for work notes and instructions.

Features and Benefits:

- S-hooks holds 5/8" to 1 1/4" (16 cm to 32 cm) handle diameters

SOURCE: https://www.grainger.com/product/4W307?s_kwcid=AL!2966!10!78890037118573!78890197679350&cm_mmc=PPC:+MSN+PPC&ef_id=XI2QdQAAAHxslBiU:20190418203843:s

2656
3FT TYPE IAA FIBERGLASS STEP LADDER WITH SHELF

FEATURES

- Extra heavy duty aluminum HolsterTop® with thick side plates
- Shoulder bolt and lock nut on top hinge; 4 solid aluminum rivets attach top to each front rail
- SPILL-PROOF® Plastic pail shelf automatically closes with Stepladder
- Slip-resistant TRACTION-TRED® steps are single riveted and have extra wide knee braces
- Heavy duty internal spreaders
- Full set of rear horizontals spaced one per foot
- GLAS*MARK® Violator stripes on rails allow ladder to be more visible
- Molded external rail shield helps protect against abrasion damage
- EDGE® bracing system helps to decrease damage to rail
- Slip-resistant foot pads attached to the EDGE® structure
- Plastic external rail shield helps protect against abrasion damage
- Every rivet backed up by metal plate or washer to protect rails

Material	Fiberglass
Max. Load	375lb
Approx. Product Height	7.56in
Approx. Product Length	36in
Approx. Product Width	19.75in
Rear Flange Dimension	1-3/16in
Spreader Material	Steel

2658a STEP LADDER TO REACH 10 FT WORKING HEIGHT

The PT7400-4C Fiberglass 4ft STOCKR'S LADDER® has 4 casters to allow easy 360 degree mobility. Each caster is spring mounted eliminating the need for a separate rake. Slip-resistant TRACTION-TRED® steps on front and rear sections allow for one or two-person jobs. Each side has a duty rating of 300lb. The PINCH-PROOF™ platform easily opens and closes and provides a secure, comfortable work area. Fiberglass rails are non-conductive for working near electricity.

SPECIFICATIONS

Approx. Closed Length	72in
Approx. Cu. Ft. Per Unit	8.4
Approx. Overall Ladder Height (Open)	72in
Approx. Overall Ladder Length (Closed)	6ft
Approx. Product Weight (lb)	37
Approx. Shipping Weight (lb)	37
Approx. Spread	50in
Certifications	ANSI A14.5 (2007), OSHA
Approx. Product Depth	7in
Description of Top Features	Safety guard rail
Foot Material	Metal with Rubber Pad
Front Flange Dimension	1-3/16in
Front Rails Dimension	3-1/8in
Material	Fiberglass
Max. Load	300lb
Approx. Product Height	9.96in
Approx. Product Length	72in
Approx. Product Width	25.25in
Platform Depth	22in
Platform Dimensions	12-3/4in x 22in

Rubbermaid 5G76 FastTrack Garage 48 Inch Rail - T9A270129 Pkg Qty 2

Rubbermaid 5E06 FastTrack Garage Ladder Hook - T9A270133 Pkg Qty 2

Rubbermaid 3S05 FastTrack Garage Hardware Kit For Fastrack Rail T9A270130:

Series Name	FastTrack Garage
Type	Hook
Total Number of Pieces	1
Rail Material	Steel
Assembled Length (Inches)	9
Magnetic	No
Mounting Hardware Included	No
Manufacturer Color/Finish	Satin nickel
Color/Finish Family	Silver
Warranty	1-year limited

Assembled Depth (Inches)	9.4
Assembled Width (Inches)	2.7
Kit	No
Material	Steel
For Use with Pegboard	No
For Use with Slatwall	No
UNSPSC	24112400
Load Capacity (lbs.)	50
Brand/Model Compatibility	FastTrack by Rubbermaid
For Use With	Ladder
Lowe's Exclusive	No

SOURCE: https://www.globalindustrial.com/p/storage/Maintenance-Garage-Furniture/Garage-Maintenance-Furniture/rubbermaid-fasttrack-garage-48-inch-rail-270129?presentType=98&trackCatKey=0&trackPrimKey=0&trackType=4&webCatKey=0

Heavy-Duty Utility Carts

Transport materials, supplies, and heavy loads securely in almost any environment.

- Available in pocket-shelf or flat-shelf models
- Ergonomic handle allows optimum hand placement for improved worker safety and control
- Executive Series version features Quiet Casters

Pocket-shelf models feature:

- Integrated V-notch to hold pipe and conduit securely for safe cutting
- Deep pocket shelves to keep loads secure

Flat-shelf models feature:

- Large, flat top shelf for oversize loads and smarter work surface
- Lower pocket shelf to keep loads secure

STAY ORGANIZED
Easy-reach tool/accessory hooks provide additional storage.

WORK MORE EFFICIENTLY
Built-in tool holster and caddy keep items at hand and in place during transport.

CUSTOMIZABLE
Molded-in fittings allow you to add pipe or rods to hold wire spools and other roll-type goods.

CASTER OPTIONS ARE AVAILABLE ON MEDIUM AND LARGE CARTS

Pneumatic casters provide a cushioned and quiet ride for fragile loads, making them ideal for rough and uneven surfaces, inside and out. Excellent on virtually all surfaces from smooth concrete to gravel.

TPR casters absorb shock and provide floor surface protection and quiet operation. Excellent on linoleum, tile, terrazzo, wood, smooth concrete, and carpet.

CART SIZES:

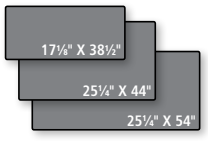

CAPACITY RANGE (lbs)
500–750

KEEP LOADS SECURE
Deep pocket shelves keep contents in place.

FG9T6600

STRUCTURAL FOAM CONSTRUCTION
Durable structural foam construction won't leak, rust, chip, dent, or peel.

FG450500

Lipped-Shelf Carts

NO.	COLOR	DESCRIPTION	U.S. DIMENSIONS	U.S. CAPACITY	U.S. SHIP WT/CTN	METRIC DIMENSIONS	METRIC CAPACITY	METRIC SHIP WT/CTN	CASTER TYPE	PACK
FG450088	**BLA, BEIG**	Ergo Handle Utility Cart	39" l x 17.88" w x 33.25" h	500 lb	30.8 lb	99.1 cm x 45.4 cm x 84.5 cm	226.8 kg	14.0 kg	5" TPR	1
FG452088	**BLA, BEIG**	Ergo Handle Utility Cart	44" l x 25.25" w x 39" h	500 lb	42.8 lb	111.8 cm x 64.1 cm x 99.1 cm	226.8 kg	19.4 kg	5" TPR	1
1867535	BLACK	**Executive** Ergo Handle Utility Cart w/ 5" Quiet Casters	36" l x 24" w x 32.25" h	500 lb	42.8 lb	91.4 cm x 61 cm x 81.9 cm	226.8 kg	19.4 kg	5" Quiet	1
FG452010	**BLA, BEIG**	HD 2-Shelf Ergo Handle Utility Cart (Med) with Pneumatic Casters	45.25" l x 25.88" w x 37.12" h	500 lb	63.0 lb	114.9 cm x 65.7 cm x 94.3 cm	226.8 kg	28.6 kg	8" Pneumatic	1
FG454600	**BLA, BEIG**	HD 2-Shelf Ergo Handle Utility Cart (Large)	55" l x 26" w x 33.25" h	750 lb	52.4 lb	139.7 cm x 66 cm x 84.5 cm	340.2 kg	23.8 kg	5" TPR	1
FG454610	**BLA, BEIG**	HD 2-Shelf Ergo Handle Utility Cart (Large) with Pneumatic Casters	55" l x 26" w x 33.25" h	750 lb	71.0 lb	139.7 cm x 66 cm x 84.5 cm	340.2 kg	32.2 kg	8" Pneumatic	1
FG450089	**BLA, BEIG**	Flat Handle Utility Cart	39" l x 17.88" w x 33.25" h	500 lb	31.1 lb	99.1 cm x 45.4 cm x 84.5cm	226.8 kg	14.1 kg	5" TPR	1
FG452089	**BLA, BEIG**	Flat Handle Utility Cart	45.25" l x 25.88" w x 33.25" h	500 lb	44.7 lb	114.9 cm x 65.7 cm x 84.5 cm	226.8 kg	20.3 kg	5" TPR	1
FG9T6600[A]	**BLA**	2-Shelf Flat Handle Utility Cart, 5" Casters	40.25" l x 25.63" w x 32.5" h	500 lb	30.8 lb	102.2 cm x 65.1 cm x 82.6 cm	226.8 kg	14.0 kg	5" (12.7 cm)	12
FG9T6700[A]	**BLA**	2-Shelf Flat Handle Utility Cart, 5" Casters	34.25" l x 17.375" w x 31.5" h	500 lb	42.8 lb	87.0 cm x 44.1 cm x 80.0 cm	226.8 kg	19.4 kg	5" (12.7 cm)	10

Flat-Shelf Carts

NO.	COLOR	DESCRIPTION	U.S. DIMENSIONS	U.S. CAPACITY	U.S. SHIP WT/CTN	METRIC DIMENSIONS	METRIC CAPACITY	METRIC SHIP WT/CTN	CASTER TYPE	PACK
FG450500	**BLA, BEIG**	HD 2-Shelf Ergo Handle Utility Cart (Small)	37.88" l x 19.2" w x 33.3" h	500 lb	29.5 lb	96.2 cm x 48.8 cm x 84.6 cm	226.8 kg	13.4 kg	5" TPR	1
FG452500	**BLA, BEIG**	HD 2-Shelf Ergo Handle Utility Cart (Med)	43.88" l x 25.88" w x 33.3" h	500 lb	41.0 lb	111.5 cm x 65.7 cm x 84.6 cm	226.8 kg	18.6 kg	5" TPR	1
FG454500	**BLA, BEIG**	HD 2-Shelf Ergo Handle Utility Cart (Large)	54" l x 25.25" w x 36" h	750 lb	52.4 lb	137.2 cm x 64.1 cm x 91.4 cm	340.2 kg	23.8 kg	5" TPR	1
FG450589	**BLA, BEIG**	HD 2-Shelf Flat Handle Utility Cart (Small)	37.88" l x 19.2" w x 33.3" h	500 lb	29.5 lb	96.2 cm x 48.8 cm x 84.6 cm	226.8 kg	13.4 kg	5" TPR	1
FG452589	**BLA, BEIG**	HD 2-Shelf Flat Handle Utility Cart (Med)	43.88" l x 25.88" w x 33.3" h	500 lb	41.0 lb	111.5 cm x 65.7 cm x 84.6 cm	226.8 kg	18.6 kg	5" TPR	1

[A]Pallet Pack

ACCESSORIZE AND CUSTOMIZE FOR YOUR NEEDS

FG459000 3-OUTLET POWER STRIP

FG335388 8-GALLON REFUSE BIN

FG459300 SINGLE FULL EXTENSION DRAWER (see Cart Accessories)

When ordering products with **BOLD** color codes, please specify color code after the product number. Refer to the Standard Color Guide at the back of the catalog.

3020

GTW680BSJ/BPL

GE® Series 4.6 DOE Cu. Ft. Stainless Steel Capacity Washer

DIMENSIONS AND INSTALLATION INFORMATION (IN INCHES)

CIRCUIT REQUIREMENTS: An individual, properly-grounded branch circuit, with a three-prong grounding-type receptacle, protected by a 15 or 20 amp circuit breaker or a time-delay fuse, is required.

ELECTRICAL RATING: 120V, 60Hz, 10A

NOTE: Washer wall outlet must be located within 36" of service code entry. Wall outlet must not be located behind dryer.

INSTALLATION INFORMATION: Before installing, consult installation instructions packed with product for current dimensional data.

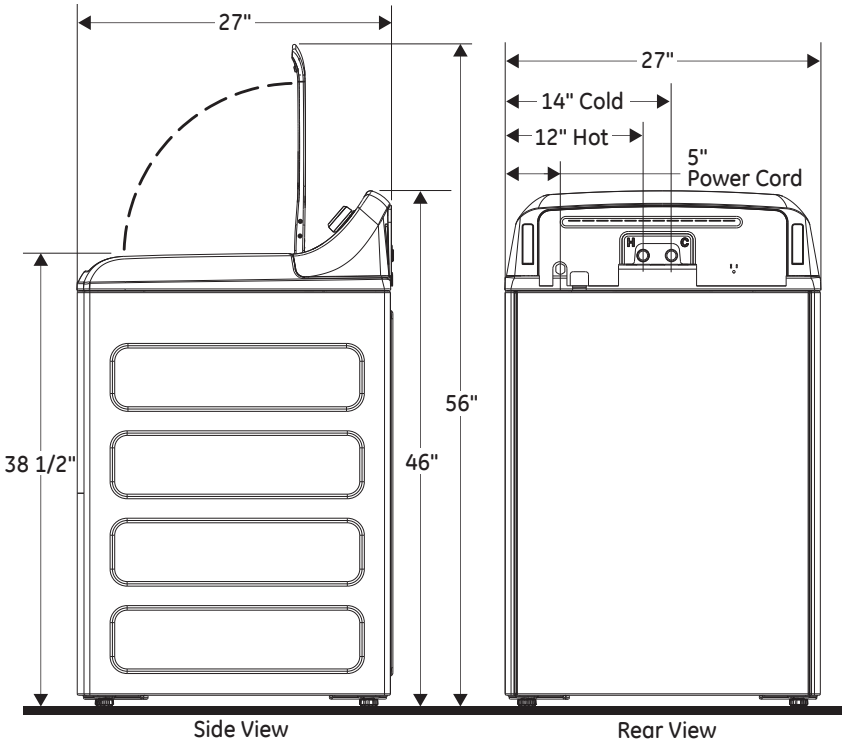

GE APPLIANCES

For answers to your Monogram, GE Café™ Series, GE Profile™ Series or GE Appliances product questions, visit our website at geappliances.com or call GE Answer Center® Service, 800.626.2000.

Listed by Underwriters Laboratories

Specification Revised 3/17

3020

GTW680BSJ/BPL

GE® Series 4.6 DOE Cu. Ft. Stainless Steel Capacity Washer

FEATURES AND BENEFITS

Deep Fill – Customize your water-fill levels with just the touch of a button. Add a little extra or fill the tub to wash the way you want

Stain Removal Guide – Clean 5 of the most common stains with preprogrammed settings that modify any cycle to help remove blood, tomato, wine, dirt and grass

Recirculation pump – Loads are thoroughly saturated with this recirculation pump that moves water and detergent through clothes

Warm Rinse – Choose a warm water rinse so every part of your laundry experience fits your preference

Sanitize with Oxi – Remove 99.9% of bacteria with a dedicated cycle that uses an Oxi additive to boost your detergent's cleaning power, while keeping fabrics looking and feeling their best

Auto Soak – Loosens stains by soaking up to 2 hours

Deep Rinse – When selected, the deep rinse cycle ensure clothes are rinsed of soap residue and fabric softener

Soft-close glass lid – Engineered with hydraulic suspension, so the lid always closes gently

Speed Wash – Provides a quick wash for lightly soiled items that are needed in a hurry

800-RPM spin speed – Fast spin speeds remove water efficiently and minimize dry times

Model GTW680BSJWS – White with silver backsplash

Model GTW680BPLDG – Diamond Gray

MODIFIED ENERGY FACTOR (IMEF)	2.08
WATER FACTOR (IWF)	3.6

GE APPLIANCES

For answers to your Monogram, GE Café™ Series, GE Profile™ Series or GE Appliances product questions, visit our website at geappliances.com or call GE Answer Center® Service, 800.626.2000.

3021

GTD65EBSJ/EBPL

GE® 7.4 Cu. Ft. Capacity Aluminized Alloy Drum Electric Dryer With HE Sensor Dry

DIMENSIONS AND INSTALLATION INFORMATION (IN INCHES)

ELECTRIC DRYER RATING:			
240V	5600W	24A	60Hz
208V	4400W	22A	60Hz

EXHAUST OPTION: 4-way rear, right, left and bottom

CIRCUIT REQUIREMENTS: An individual, properly-grounded branch circuit, protected by a 30-amp circuit breaker or a time-delay fuse, is required.

NOTE: Dryer wall outlet must be located within 36" of service cord entry and acessible when dryer is mounted in position.

INSTALLATION INFORMATION: For complete information, see installation instructions packed with your dryer.

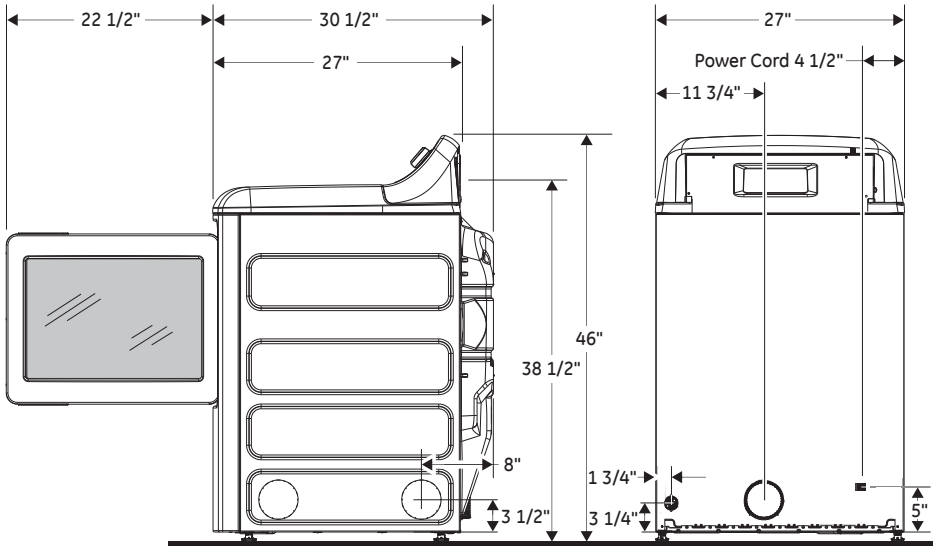

SIDE VIEW

REAR VIEW

Special Installation Requirements

ALCOVE OR CLOSET INSTALLATION:

- If your dryer is approved for installation in an alcove or closet, it will be stated on a label on the dryer back.
- The dryer MUST be exhausted to the outside.
- Minimum clearances between dryer cabinet and adjacent walls or other surfaces are: 0" either side; 1" front, top and rear
- Closet doors must be louvered or otherwise ventilated and must contain a minimum of 60 sq. in. of open area equally distributed. If this closet contains both a washer and a dryer, doors must contain a minimum of 120 sq. in. of open area equally distributed.
- No other fuel-burning appliance shall be installed in the same closet with a gas dryer.

BATHROOM OR BEDROOM INSTALLATION:

- The dryer MUST be exhausted to the outdoors.
- The installation must conform with the local codes, or in the absence of local codes, with the National Electric Code and National Fuel Gas Code, ANSI Z223 for gas dryers.

MINIMUM CLEARANCES OTHER THAN ALCOVE OR CLOSET INSTALLATION:

- Minimum clearances to combustible surfaces are: 0" both sides; 1" rear

DRYER EXHAUSTING INFORMATION: Use metal duct only, vertical and horizontal ducting.

POWER CORD LOCATIONS

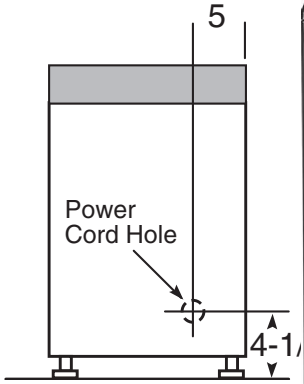

BACK VIEW

GE APPLIANCES

For answers to your Monogram, GE Café™ Series, GE Profile™ Series or GE Appliances product questions, visit our website at geappliances.com or call GE Answer Center® Service, 800.626.2000.

Specification Revised 8/17

GTD65EBSJ/EBPL

GE® 7.4 Cu. Ft. Capacity Aluminized Alloy Drum Electric Dryer With HE Sensor Dry

FOR COMPLETE INFORMATION, SEE INSTALLATION INSTRUCTIONS PACKED WITH YOUR DRYER.

DUCTING MATERIALS:

For best performance, this dryer should be vented with 4" diameter all rigid metal exhaust duct. If rigid metal duct cannot be used, then UL-listed flexible metal (semi-rigid) ducting can be used (Kit WX08X10077). In special installations, it may be necessary to connect the dryer to the house vent using a flexible metal (foil-type) duct. A UL-listed flexible metal (foil-type) duct may be used ONLY in installations where rigid metal or flexible metal (semi-rigid) ducting cannot be used AND where a 4" diameter can be maintained throughout the entire length of the transition duct. Please see installation instruction packed with your dryer for complete instructions when using flexible metal (foil type) ducting.

EXHAUST LENGTH CALCULATION:

1. Determine the number of 90° turns needed for your installation. If you exhaust to the side or bottom of dryer, add one turn.
2. The maximum length of 4" rigid (aluminum or galvanized) duct which can be tolerated is shown in the table. A turn of 45° or less may be ignored. Two 45° turns within the duct length should be treated as a 90° elbow. A turn over 45° should be treated as a 90° elbow.

Dryers must be exhausted to the outside.

CAUTION: For personal safety do not terminate exhaust into a chimney, under any enclosed house floor (crawl space), or into an attic, since the accumulated lint could create a fire hazard or moisture could cause damage. Never terminate the exhaust into a common duct or plenum with a kitchen exhaust, since the combination of lint and grease could create a fire hazard.

Exhaust ducts should be terminated in a dampered wall cap to prevent back drafts, bird nesting, etc. The wall cap must also be located at least 12" above the ground or any other obstruction with the opening pointed down.

FOR MORE INFORMATION ON VENTING KITS AND ACCESSORIES, PLEASE CALL 1-800-GE-CARES.

DRYER EXHAUSTING INFORMATION— USE METAL DUCT ONLY VERTICAL AND HORIZONTAL DUCTING

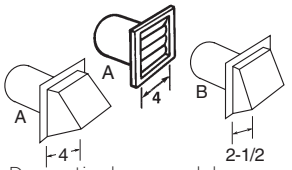

Domestic dryer models	Number of 90° turns	BEST PERFORMANCE: Maximum length of 4" dia rigid metal duct — Exhaust hood type A 4" opening	BEST PERFORMANCE: Maximum length of 4" dia rigid metal duct — Exhaust hood type B 2-1/2" opening
Long Vent 6.1-7.4 cu. ft. capacity electric & gas (GTD33, GTD42, GTD45, GTD65, GTX22, GTX33, GTX42 and GTX65)	0	120 ft.	90 ft.
	1	100 ft.	75 ft.
	2	85 ft.	65 ft.
	3	70 ft.	55 ft.
	4	60 ft.	45 ft.
	5	55 ft.	35 ft.

For every extra 90° elbow, reduce the allowable vent system length by 10 ft.
Two 45° elbows will be treated like one 90° elbow.
For the side exhaust installations, add one 90° elbow to the chart.
When calculating the total vent system length, you must add all the straight portions and elbows of the system (including the transition duct.

GE APPLIANCES

3021

GTD65EBSJ/EBPL

GE® 7.4 Cu. Ft. Capacity Aluminized Alloy Drum Electric Dryer With HE Sensor Dry

FEATURES AND BENEFITS

ENERGY STAR® qualified – Meets or exceeds federal guidelines for energy efficiency for year-round energy and money savings

Up to 120 ft. venting capability – Provides flexible installation

Extended Tumble – Tumble clothes without heat to help prevent creasing and wrinkling

HE Sensor Dry – Keep your clothes looking and feeling their best. Dual thermistors continually monitor temperature with a sensor bar that measures moisture to prevent over-drying

My Cycle Settings – Dry clothes with the settings you prefer on any cycle, rather than the defaults, and store your settings for later use

Damp Alert – Alerts you when clothes are the ideal dampness for ironing, for perfectly wrinkle-free results

Model GTD65EBSJWS – White with silver backsplash

Model GTD65EBPLDG – Diamond Gray

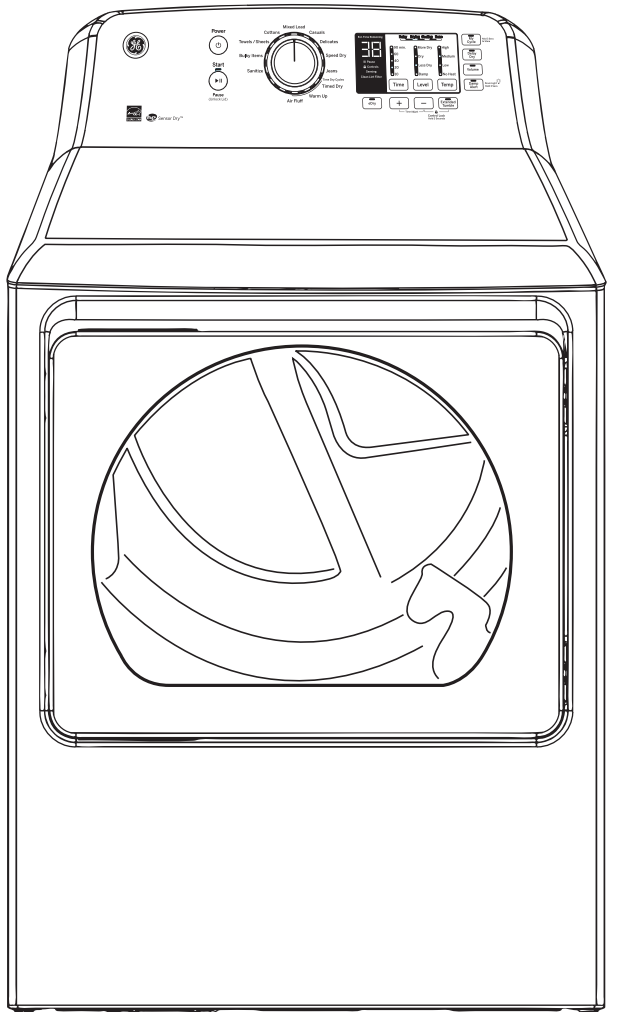

GE APPLIANCES

Listed by Underwriters Laboratories

Specification Revised 8/17

3026

Rubbermaid®
Commercial Products

COLLAPSIBLE X-CART

ES
EXECUTIVE SERIES™

SMART DESIGN. TRUSTED EXPERIENCE.

JUNE 14, 2019

Rubbermaid Commercial Products

COLLAPSIBLE X-CART

EXECUTIVE SERIES™

ENHANCE ORGANIZATION, PRODUCTIVITY, AND IMAGE IN ANY COMMERCIAL FACILITY

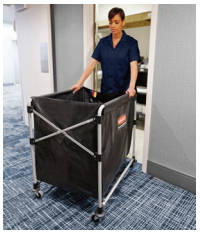

HOSPITALITY
- Housekeeping
- Laundry
- Pool and Spa
- Maintenance
- Janitorial
- Collection

HEALTHCARE
- Housekeeping
- Laundry
- Locker Room
- Maintenance
- Janitorial

FOODSERVICE
- Kitchen
- Maintenance
- Janitorial
- Collection

SPA AND FITNESS
- Locker Room
- Fitness Studio
- Janitorial
- Collection

SCHOOLS AND UNIVERSITIES
- Locker Room
- Laundry
- Janitorial
- Collection

OFFICE BUILDING
- Mail Room
- Janitorial
- Collection

1881749 – Collapsible X-Cart
(4 Bushels; 150 L)
Ultra-compact model ideal for transporting smaller loads

1881750 – Collapsible X-Cart
(8 Bushels; 300 L)
Easily accommodates large, bulky loads

1881781 – Multi-Stream Collapsible X-Cart
(2 x 4 Bushels; 300 L)
Configurable option provides ability to easily divide and sort material

Collapsible X-Cart

No.	Description	Color	Capacity	Length	Width (Collapsed)	Height	Case Pack
1881749	Collapsible X-Cart – 4 Bushels	Black	220 lbs.	24.1"	20.3" (6.6")	33"	1
1881750	Collapsible X-Cart – 8 Bushels	Black	220 lbs.	24.1"	35" (6.6")	33"	1
1881781	Collapsible X-Cart Multi-Stream (2 x 4 Bushels)	Black	220 lbs.	24.1"	35" (6.6")	33"	1

Collapsible X-Cart Accessories

No.	Description	Color	Capacity	Length	Width	Height	Case Pack
1881782	Collapsible X-Cart Replacement Bag (for 1881749 and 1881781)	Black	220 lbs.	15.3"	22.4"	27.3"	2
1881783	Collapsible X-Cart Replacement Bag – 8 Bushels	Black	220 lbs.	30.5"	22.4"	27.3"	2
1889863	Collapsible X-Cart Cover (for 1881749)	Black	–	25.4"	19.88"	–	1
1889864	Collapsible X-Cart Cover (for 1881750 and 1881781)	Black	–	26.25"	35"	–	1

SOURCE: https://www.webstaurantstore.com/rubbermaid-collapsible-8-bushel-x-cart-with-large-black-cover/6901888REGKT.html

Work Smarter.

© 2013 by Rubbermaid Commercial Products LLC 3124 Valley Avenue, Winchester, VA 22601
RCP-175 REV 3/15

3039a

WASTE BASKET 28 QT FOR UNDER DESK AREAS

RUBBERMAID FG254300BLA SPECS	
Length	14 1/2 Inches
Width	10 1/2 Inches
Height	15 5/16 Inches
Capacity	28 qt.
Color	Black
Features	Fire Resistant UL Listed
Material	Resin
Shape	Rectangle
Type	Trash Cans

SOURCE: https://www.webstaurantstore.com/rubbermaid-fg254300bla-28-qt-black-rectangular-fire-resistant-medical-wastebasket/690FG2543BK.html

3040a

Rubbermaid®
Commercial Products

Slim Jim®

HEALTHCARE

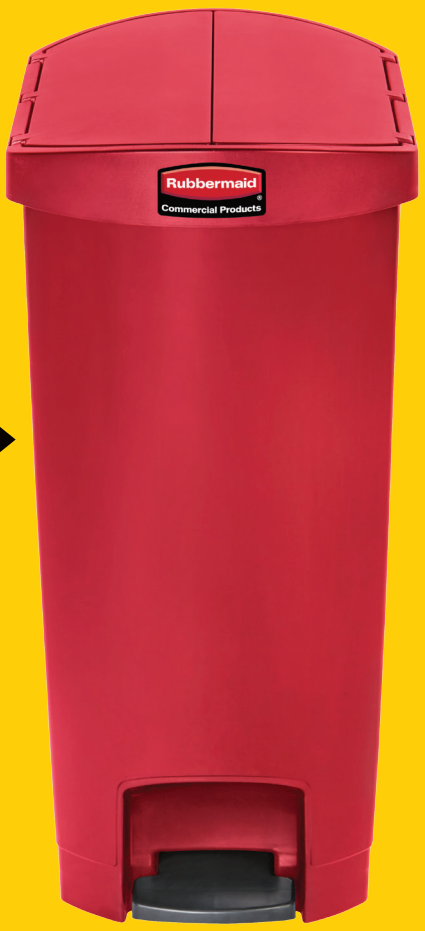

FITS IN THE TIGHTEST SPACES

COMMERCIAL-GRADE PEDAL TESTED TO 300,000 CYCLES*

Ensures long life

INTERNAL HINGE

Protects walls

QUIET AND CONTROLLED LID CLOSURE

Minimizes noise

JUNE 14, 2019

*Based on internal testing of 50L containers

FM APPROVED

OSHA OBRA

RECOMMENDED PRODUCT BY APPLICATION

	SIZE	PATIENT ROOM	NURSES' STATION	HALLWAY	RECEPTION AREA	EXAM ROOM	DOCTOR'S OFFICE	PUBLIC BATHROOM	KITCHEN
Slim Jim® Step-On Resin	15L/4G					●	●		
	30L/8G	●			●	●	●		
	50L/13G	●	●	●	●			●	
	68L/18G	●	●	●	●			●	●
	90L/23G								●
Slim Jim® Step-On Stainless Steel	15L/4G					●	●		
	30L/8G	●			●	●	●		
	50L/13G	●	●	●	●			●	
	90L/23G							●	

*For MRI room applications, contact your sales representative for our all-plastic step-on containers.

CHOOSE THE RIGHT STYLE BASED ON SPACE CONSTRAINTS

Front Step

End Step

CHOOSE THE RIGHT COLOUR BASED ON YOUR COLOUR-CODING NEEDS

COLOURS AVAILABLE FOR RESIN:

COLOURS AVAILABLE FOR STAINLESS STEEL:

THE DEFENDERS®

Step-on containers constructed of fire-safe galvanized steel for CSFM and UL certifications.

CLASSIFIED UL CSFM

RCP-364
#141524
©2015 Rubbermaid Commercial Products LLC
8900 Northpointe Executive Drive, Huntersville, NC 28078

To see our complete range of refuse solutions visit our online catalog at **rubbermaidcommercial.com**

Rubbermaid® Commercial Products

3040b

Rubbermaid®
Commercial Products

SlimJim®

FITS IN THE TIGHTEST SPACES

SLIM PROFILE
Fits in tightest spaces

QUIET AND CONTROLLED LID-CLOSURE
Minimizes noise

INTERNAL HINGE
Protects wall

JUNE 14, 2019

FM APPROVED OSHA OBRA

SLIM JIM® Resin Containers

			BEIGE	WHITE	RED	YELLOW	GREEN	BLUE	GRAY	BLACK
15L /4G	FRONT STEP	RCP #	1883455	1883554	1883563	1883572	1883581	1883590	1883599	1883608
		CUSTOMER #								
30L/8G	FRONT STEP	RCP #	1883456	1883555	1883564	1883573	1883582	1883591	1883600	1883609
		CUSTOMER #								
	END STEP	RCP #	1883457	1883556	1883565	1883574	1883583	1883592	1883601	1883610
		CUSTOMER #								
50L/13G	FRONT STEP	RCP #	1883458	1883557	1883566	1883575	1883584	1883593	1883602	1883611
		CUSTOMER #								
	END STEP	RCP #	1883459	1883558	1883567	1883576	1883585	1883594	1883603	1883612
		CUSTOMER #								
68L/18G	FRONT STEP	RCP #	1883460	1883559	1883568	1883577	1883586	1883595	1883604	1883613
		CUSTOMER #								
	END STEP	RCP #	1883551	1883560	1883569	1883578	1883587	1883596	1883605	1883614
		CUSTOMER #								
90L/24G	FRONT STEP	RCP #	1883552	1883561	1883570	1883579	1883588	1883597	1883606	1883615
		CUSTOMER #								
	END STEP	RCP #	1883553	1883562	1883571	1883580	1883589	1883598	1883607	1883616
		CUSTOMER #								

15L/4G

30L/8G

50L/13G

68L/18G

90L/24G

SLIM JIM® Stainless Steel Containers

			BLACK	RED	WHITE
15L /4G	FRONT STEP	RCP #	1901982	1901983	1901984
		CUSTOMER #			
30L/8G	FRONT STEP	RCP #	1901985	1901988	1901990
		CUSTOMER #			
	END STEP	RCP #	1901986	1901989	1901991
		CUSTOMER #			
	FRONT STEP DUAL LINER	RCP #	1901987		
		CUSTOMER #			
50L/13G	FRONT STEP	RCP #	1901992	1901995	1901997
		CUSTOMER #			
	END STEP	RCP #	1901993	1901996	1901998
		CUSTOMER #			
	FRONT STEP DUAL LINER	RCP #	1901994		
		CUSTOMER #			
90L/24G	FRONT STEP	RCP #	1901999	1902002	1902004
		CUSTOMER #			
	END STEP	RCP #	1902000	1902003	1902005
		CUSTOMER #			
	FRONT STEP DUAL LINER	RCP #	1902001		
		CUSTOMER #			

15L/4G

30L/8G

50L/13G

90L/24G

RCP-374 | #141662
©2014 Rubbermaid Commercial Products LLC
8900 Northpointe Executive Drive, Huntersville, NC 28078

For our complete range of refuse solutions visit our online catalog at **rubbermaidcommercial.com**

Rubbermaid® Commercial Products

3040c & 3040d

SLIM JIM® UNDER-COUNTER CONTAINERS

Slim Jim® Under-Counter Containers are a purpose-built solution for space-efficient waste disposal under the counter.

Features and Benefits:

- Large angled opening provides 2x more access under the counter than traditional slim containers*
- Integrated venting channels make removing liners 80% easier, improving productivity and reducing the risk of worker injury
- Bag cinches secure liners around the rim of the container and allow for quick, knot-free liner changes
- Rim and base handles improve grip and control while lifting and emptying full containers
- Reinforced rim maintains structural integrity to resist crushing

Colors available:

Gray, Black, Brown, Beige, Blue, Green

Material Composition:

Injection-molded with high-quality resin

Compatibility:

13-Gallon Slim Jim® Under-Counter Containers:

- Slim Jim® Stainless Steel Dollies
- Intuitive Recycling Label Kit – 2018391

23-Gallon Slim Jim® Under-Counter Containers:

- Intuitive Recycling Label Kit – 197789

*Compared to 23-Gallon Vented Slim Jim® containers

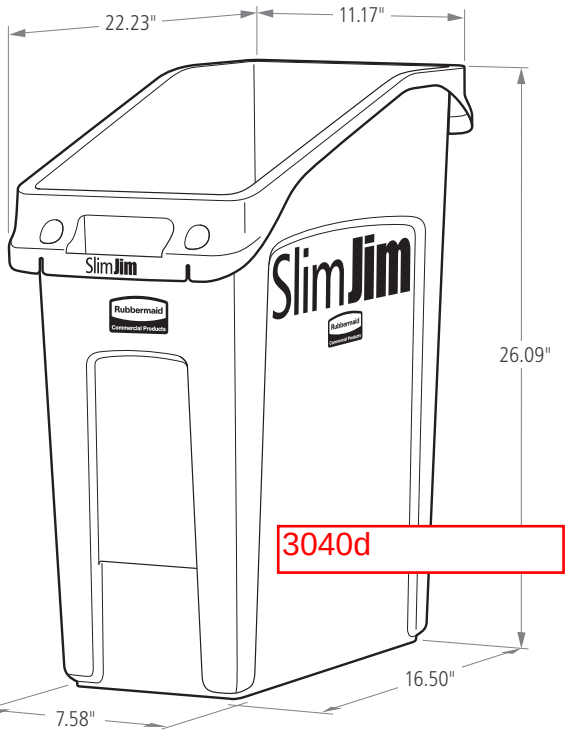

13-Gallon Slim Jim® Under-Counter Container

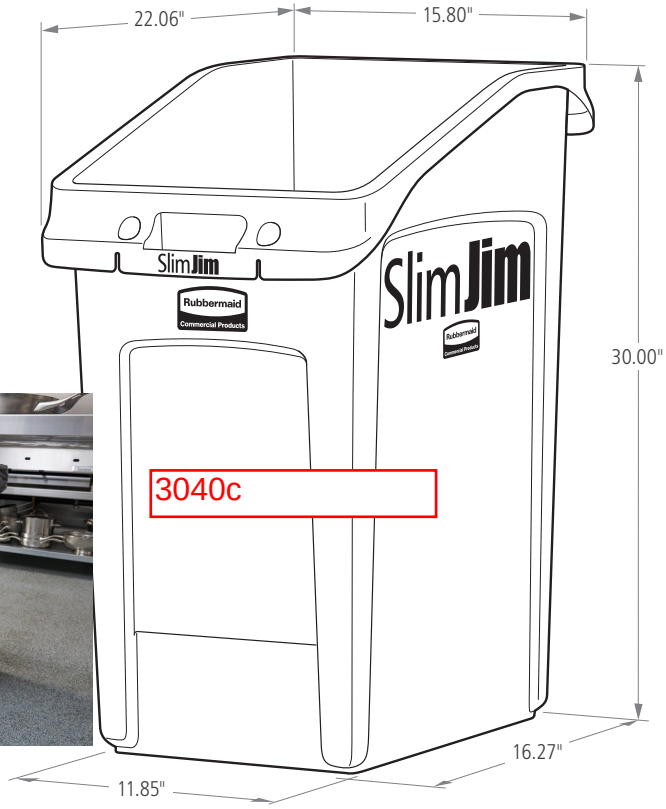

23-Gallon Slim Jim® Under-Counter Container

JUNE 14, 2019

SLIM JIM® UNDER-COUNTER CONTAINERS

SKU #	DESCRIPTION	COLOR	CAPACITY		LENGTH		WIDTH		HEIGHT		PACK SIZE
			GAL	L	IN	MM	IN	MM	IN	MM	
2026695	SLIM JIM® UNDER-COUNTER CONTAINER	GRAY	13	49	22.23	564.59	11.17	283.69	26.09	662.76	4
2026696	SLIM JIM® UNDER-COUNTER CONTAINER	BLACK	13	49	22.23	564.59	11.17	283.69	26.09	662.76	4
2026697	SLIM JIM® UNDER-COUNTER CONTAINER	BROWN	13	49	22.23	564.59	11.17	283.69	26.09	662.76	4
2026698	SLIM JIM® UNDER-COUNTER CONTAINER	BEIGE	13	49	22.23	564.59	11.17	283.69	26.09	662.76	4
2026699	SLIM JIM® UNDER-COUNTER CONTAINER	BLUE	13	49	22.23	564.59	11.17	283.69	26.09	662.76	4
2026700	SLIM JIM® UNDER-COUNTER CONTAINER	GREEN	13	49	22.23	564.59	11.17	283.69	26.09	662.76	4
2026721	SLIM JIM® UNDER-COUNTER CONTAINER	GRAY	23	87	22.06	560.22	15.80	401.22	30.00	762.00	4
2026722	SLIM JIM® UNDER-COUNTER CONTAINER	BLACK	23	87	22.06	560.22	15.80	401.22	30.00	762.00	4
2026723	SLIM JIM® UNDER-COUNTER CONTAINER	BROWN	23	87	22.06	560.22	15.80	401.22	30.00	762.00	4
2026724	SLIM JIM® UNDER-COUNTER CONTAINER	BEIGE	23	87	22.06	560.22	15.80	401.22	30.00	762.00	4
2026725	SLIM JIM® UNDER-COUNTER CONTAINER	BLUE	23	87	22.06	560.22	15.80	401.22	30.00	762.00	4
2026726	SLIM JIM® UNDER-COUNTER CONTAINER	GREEN	23	87	22.06	560.22	15.80	401.22	30.00	762.00	4

©2018 Rubbermaid Commercial Products LLC
8900 Northpointe Executive Park Drive, Huntersville, NC 28078

Rubbermaid® Commercial Products

3041

STEP ON 8 GALLON WASTE CONTAINER-RED FOR BIO HAZARD TRASH

RUBBERMAID FG614300RED SPECS	
Width	16 1/4 Inches
Depth	15 3/4 Inches
Height	17 1/8 Inches
Capacity	8 Gallons
Color	Red
Features	FM Approved
Lid Type	Hinged
Made in America	Yes
Material	Plastic
Shape	Rectangle
Type	Step-On Trash Can

SOURCE: https://www.webstaurantstore.com/rubbermaid-fg614300red-8-gallon-red-rectangular-step-on-trash-can/690FG6143RD.html

3043

HALF ROUNDS

FLAT TOP

The Half Rounds Series decorative refuse container fits flush against walls to conserve space. The sleek and functional design of this receptacle blends seamlessly with upscale and modern indoor facilities.

FEATURES AND BENEFITS:

FEATURES

- Heavy-gauge, fire-safe steel
- Leak-proof galvanized or rigid plastic liner included to contain liquids and keep the surrounding area cleaner
- Adjustable leg levelers create stability on uneven surfaces
- Shipped fully assembled

ADA COMPLIANT

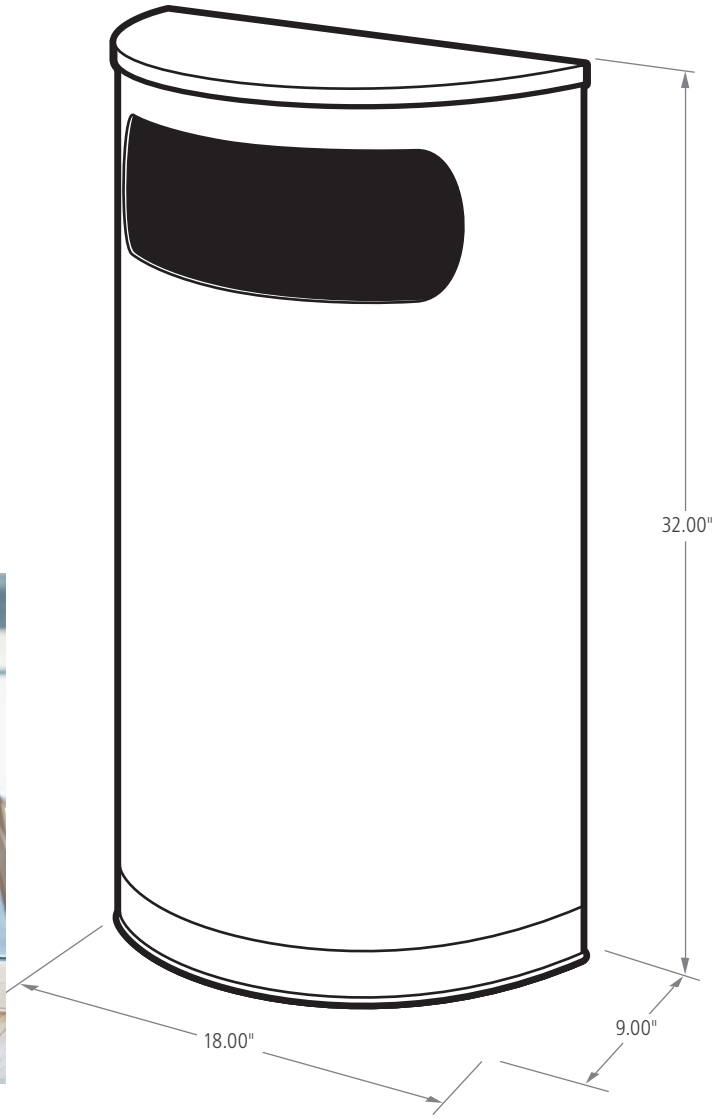

GALLONS	LENGTH (in.)	WIDTH (in.)	HEIGHT (in.)
9G	18.00	9.00	32.00

build your own ▸rubbermaidcommercial.com/customize

Rubbermaid® Commercial Products

3043

HALF ROUNDS

FLAT TOP

STANDARD COLOR OPTIONS

STAINLESS STEEL | BLACK GLOSS | SATIN BRASS ALUMINUM | CRIMSON GLOSS | ANTHRACITE METALLIC

SKU #	DESCRIPTION	LINER	COLOR	GALLONS	WEIGHT (lbs.)	LENGTH (in.)	WIDTH (in.)	HEIGHT (in.)
FGSO8SSSPL	HALF ROUND 34L/9G	METAL	STAINLESS STEEL	9	26.00	18.00	9.00	32.00
FGSO820PLBK	HALF ROUND 34L/9G	PLASTIC	BLACK GLOSS WITH CHROME TRIM	9	26.00	18.00	9.00	32.00
FGSO810PLBK	HALF ROUND 34L/9G	METAL/PLASTIC	BLACK GLOSS WITH BRASS TRIM	9	26.00	18.00	9.00	32.00
FGSO810PLCR	HALF ROUND 34L/9G	METAL/PLASTIC	CRIMSON GLOSS WITH BRASS TRIM	9	26.00	18.00	9.00	32.00
FGSO820PLANT	HALF ROUND 34L/9G	PLASTIC	ANTHRACITE METALLIC WITH CHROME TRIM	9	26.00	18.00	9.00	32.00
FGSO8SBSPL	HALF ROUND 34L/9G	PLASTIC	SATIN BRASS STAINLESS STEEL	9	26.00	18.00	9.00	32.00

BUILD YOUR OWN ▶RUBBERMAIDCOMMERCIAL.COM/CUSTOMIZE

©2016 Rubbermaid Commercial Products LLC
8900 Northpointe Executive Park Drive, Huntersville, NC 28078

Rubbermaid® Commercial Products

3043C

WASTE CONTAINER, DROP IN TOP, 15 GALLON SUITABLE FOR RESTROOMS

RUBBERMAID FGAOT15BKPL SPECS	
Height	30 Inches
Diameter	15 Inches
ADA Compliant	Yes
Capacity	15 Gallons
Color	Black
Lid Type	Open
Liner Material	Rigid Plastic
Made in America	Yes
Material	Steel
Shape	Round

SOURCE: https://www.webstaurantstore.com/rubbermaid-fgaot15bkpl-crowne-textured-black-round-open-top-steel-waste-receptacle-with-rigid-plastic-liner-15-gallon/690FGAOT15BK.html

3043e

WASTE CONTAINER-DROP IN TOP-25 GALLONS-STAINLESS STEEL

RUBBERMAID FGS3SSTSSPL SPECS	
Height	35 1/2 Inches
Diameter	18 Inches
Opening Diameter	5 Inches
ADA Compliant	Yes
Capacity	25 Gallons
Color	Silver
Lid Type	Open
Liner Material	Rigid Plastic
Made in America	Yes
Material	Stainless Steel
Shape	Round
Type	Trash Cans

SOURCE: https://www.webstaurantstore.com/rubbermaid-fgs3sstsspl-classics-round-stainless-steel-drop-top-waste-receptacle-with-stainless-steel-lid-levelers-and-rigid-plastic-liner-25-gallon/690FGS3SSTSS.html

3045

56 GALLON SQUARE LARGE TOP OPENING WASTECONTAINER WITH HOOD

RUBBERMAID FG256B00BRN SPECS	
Width	25 1/2 Inches
Depth	22 3/4 Inches
Height	31 1/8 Inches
Capacity	56 Gallons
Color	Brown
Lid Type	No Lid
Material	Heavy Duty Plastic
Shape	Square
Style	Stationary

SOURCE: https://www.webstaurantstore.com/rubbermaid-fg256b00brn-glutton-56-gallon-brown-trash-can/690256B%20%20%20%20%20BR.html

3046a

BRUTE® CONTAINERS

BRUTE® containers are guaranteed to never fade, warp, crack, or crush, with a proprietary design constructed with the highest quality material.

Features and Benefits:

- Venting channels make removing liners up to 50% easier, improving productivity and reducing the risk of injury
- Commercial-grade construction guaranteed to never fade, warp, crack, or crush
- Bag cinches secure liners, allowing for knot-free liner changes. Tested to 200,000 cycles
- Contoured base handles improve grip and ergonomics, reducing strain and improving efficiency
- Rim with rib-strengthened design increases strength and resists crushing
- Rounded handles make lifting and moving easier
- Reinforced base is specifically engineered to be dragged over rough surfaces in tough environments

NSF
2 & 21 Compliant

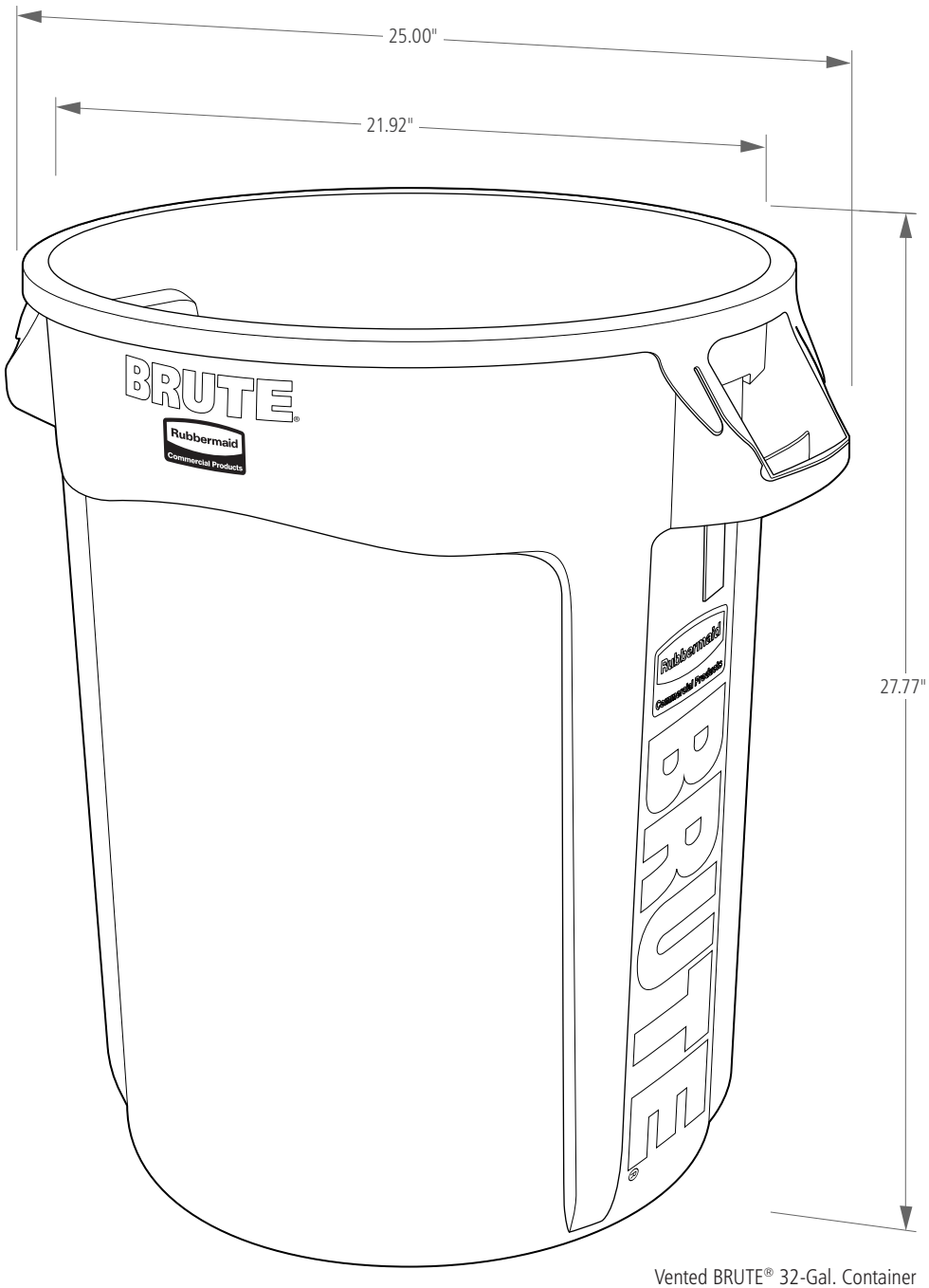

Vented BRUTE® 32-Gal. Container

JUNE 14, 2019

BRUTE® CONTAINERS

SKU #	DESCRIPTION	COLOR	CAPACITY GAL	HEIGHT IN	DIAMETER IN	DIAMETER WITH HANDLE IN	PACK SIZE
FG261000GRAY	BRUTE® 10 GALLON CONTAINER	GRAY	10G	17.13	15.63	18.00	6
FG261000WHT	BRUTE® 10 GALLON CONTAINER	WHITE	10G	17.13	15.63	18.00	6
FG261000RED	BRUTE® 10 GALLON CONTAINER	RED	10G	17.13	15.63	18.00	6
FG261000YEL	BRUTE® 10 GALLON CONTAINER	YELLOW	10G	17.13	15.63	18.00	6
1779699	BRUTE® 10 GALLON CONTAINER	BLUE	10G	17.13	15.63	18.00	6
FG261000DGRN	BRUTE® 10 GALLON CONTAINER	DARK GREEN	10G	17.13	15.63	18.00	6
1926827	BRUTE® 10 GALLON CONTAINER	BLACK	10G	17.13	15.63	18.00	6
FG262000GRAY	BRUTE® 20 GALLON CONTAINER	GRAY	20G	22.91	19.38	22.50	6
FG262000WHT	BRUTE® 20 GALLON CONTAINER	WHITE	20G	22.91	19.38	22.50	6
FG262000RED	BRUTE® 20 GALLON CONTAINER	RED	20G	22.91	19.38	22.50	6
FG262000YEL	BRUTE® 20 GALLON CONTAINER	YELLOW	20G	22.91	19.38	22.50	6
FG262000BLUE	BRUTE® 20 GALLON CONTAINER	BLUE	20G	22.91	19.38	22.50	6
FG262000DGRN	BRUTE® 20 GALLON CONTAINER	DARK GREEN	20G	22.91	19.38	22.50	6
1779734	BRUTE® 20 GALLON CONTAINER	BLACK	20G	22.91	19.38	22.50	6
FG262073BLUE	BRUTE® 20 GALLON RECYCLING CONTAINER	BLUE	20G	22.91	19.38	22.50	6
1926828	BRUTE® 20 GALLON RECYCLING CONTAINER	DARK GREEN	20G	22.91	19.38	22.50	6
FG263200GRAY	BRUTE® 32 GALLON CONTAINER	GRAY	32G	27.77	21.92	25.00	6
FG263200WHT	BRUTE® 32 GALLON CONTAINER	WHITE	32G	27.77	21.92	25.00	6
FG263200RED	BRUTE® 32 GALLON CONTAINER	RED	32G	27.77	21.92	25.00	6
FG263200YEL	BRUTE® 32 GALLON CONTAINER	YELLOW	32G	27.77	21.92	25.00	6
FG263200BLUE	BRUTE® 32 GALLON CONTAINER	BLUE	32G	27.77	21.92	25.00	6
FG263200DGRN	BRUTE® 32 GALLON CONTAINER	DARK GREEN	32G	27.77	21.92	25.00	6
1867531	BRUTE® 32 GALLON CONTAINER	BLACK	32G	27.77	21.92	25.00	6
FG263273BLUE	BRUTE® 32 GALLON RECYCLING CONTAINER	BLUE	32G	27.77	21.92	25.00	6
1788472	BRUTE® 32 GALLON RECYCLING CONTAINER	DARK GREEN	32G	27.77	21.92	25.00	6
FG264360GRAY	BRUTE® 44 GALLON CONTAINER	GRAY	44G	31.50	24.00	27.75	4
1779740	BRUTE® 44 GALLON CONTAINER	WHITE	44G	31.50	24.00	27.75	4
FG264360RED	BRUTE® 44 GALLON CONTAINER	RED	44G	31.50	24.00	27.75	4
FG264360YEL	BRUTE® 44 GALLON CONTAINER	YELLOW	44G	31.50	24.00	27.75	4
FG264360BLUE	BRUTE® 44 GALLON CONTAINER	BLUE	44G	31.50	24.00	27.75	4
1779741	BRUTE® 44 GALLON CONTAINER	DARK GREEN	44G	31.50	24.00	27.75	4
FG264360BLA	BRUTE® 44 GALLON CONTAINER	BLACK	44G	31.50	24.00	27.75	4
FG264307BLUE	BRUTE® 44 GALLON RECYCLING CONTAINER	BLUE	44G	31.50	24.00	27.75	4
1926829	BRUTE® 44 GALLON RECYCLING CONTAINER	DARK GREEN	44G	31.50	24.00	27.75	4
FG265500GRAY	BRUTE® 55 GALLON CONTAINER	GRAY	55G	33.19	26.38	30.75	3
FG265500WHT	BRUTE® 55 GALLON CONTAINER	WHITE	55G	33.19	26.38	30.75	3
FG265500RED	BRUTE® 55 GALLON CONTAINER	RED	55G	33.19	26.38	30.75	3
FG265500YEL	BRUTE® 55 GALLON CONTAINER	YELLOW	55G	33.19	26.38	30.75	3
1779732	BRUTE® 55 GALLON CONTAINER	BLUE	55G	33.19	26.38	30.75	3
FG265500DGRN	BRUTE® 55 GALLON CONTAINER	DARK GREEN	55G	33.19	26.38	30.75	3
1779739	BRUTE® 55 GALLON CONTAINER	BLACK	55G	33.19	26.38	30.75	3

©2016 Rubbermaid Commercial Products LLC
8900 Northpointe Executive Park Drive, Huntersville, NC 28078

Rubbermaid® Commercial Products

Rubbermaid®
Commercial Products

FG9T7200/1861429

ES

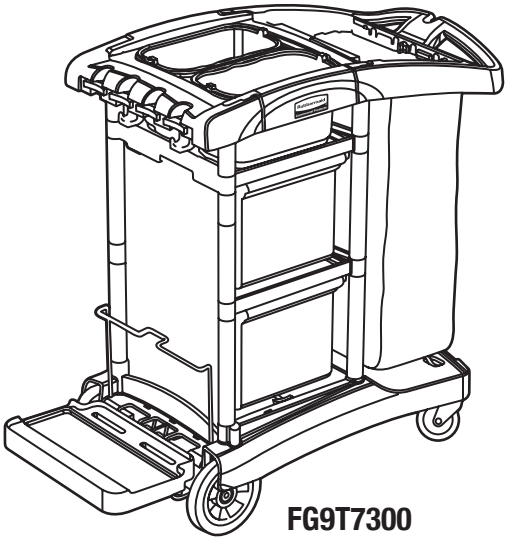

FG9T7300

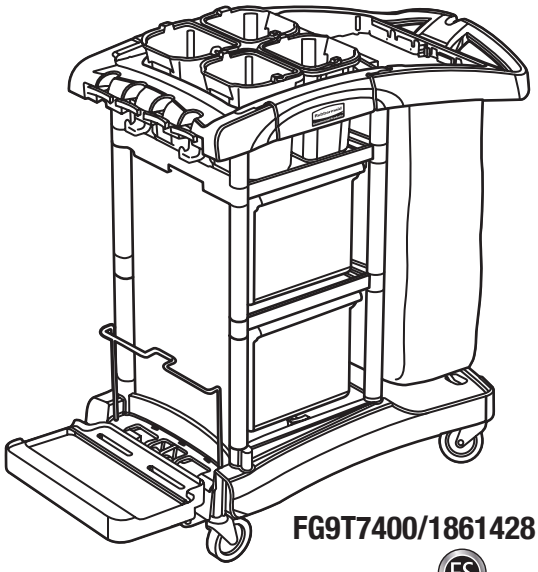

FG9T7400/1861428

ES

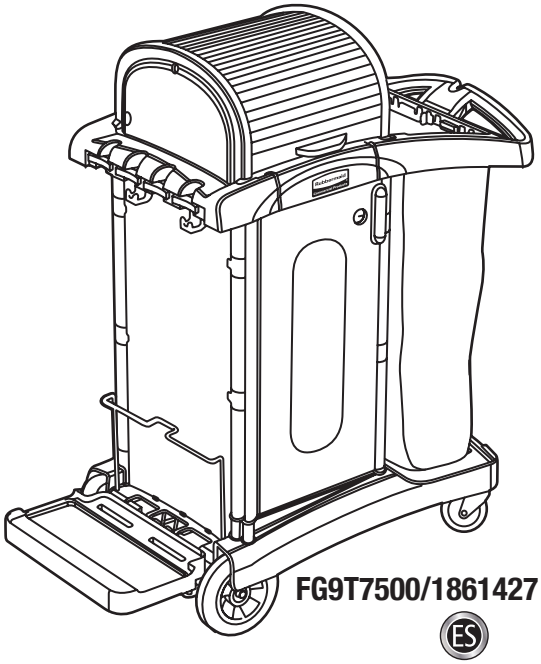

FG9T7500/1861427

ES

1877582

JUNE 14, 2019

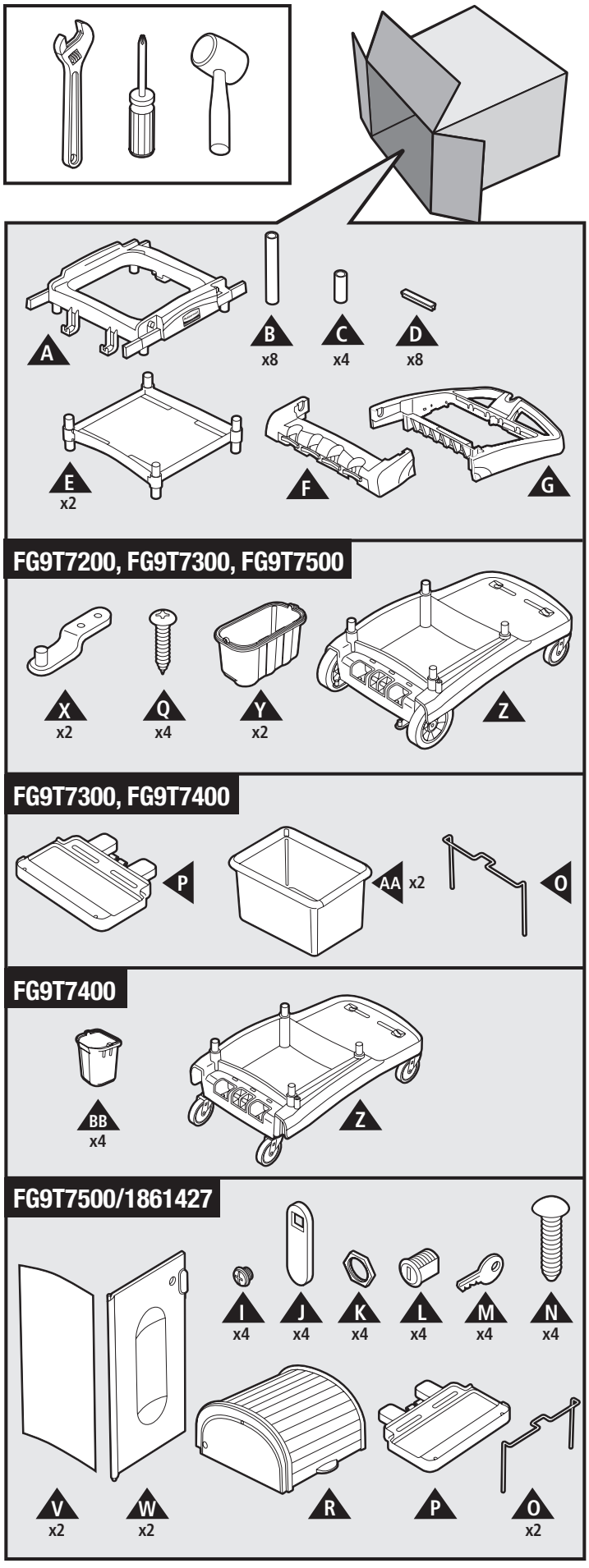
A
B
x8
C
x4
D
x8
E
x2
F
G
FG9T7200, FG9T7300, FG9T7500
X
x2
Q
x4
Y
x2
Z
FG9T7300, FG9T7400
P
AA
x2
O
FG9T7400
BB
x4
Z
FG9T7500/1861427
I
x4
J
x4
K
x4
L
x4
M
x4
N
x4
V
x2
W
x2
R
P
O
x2

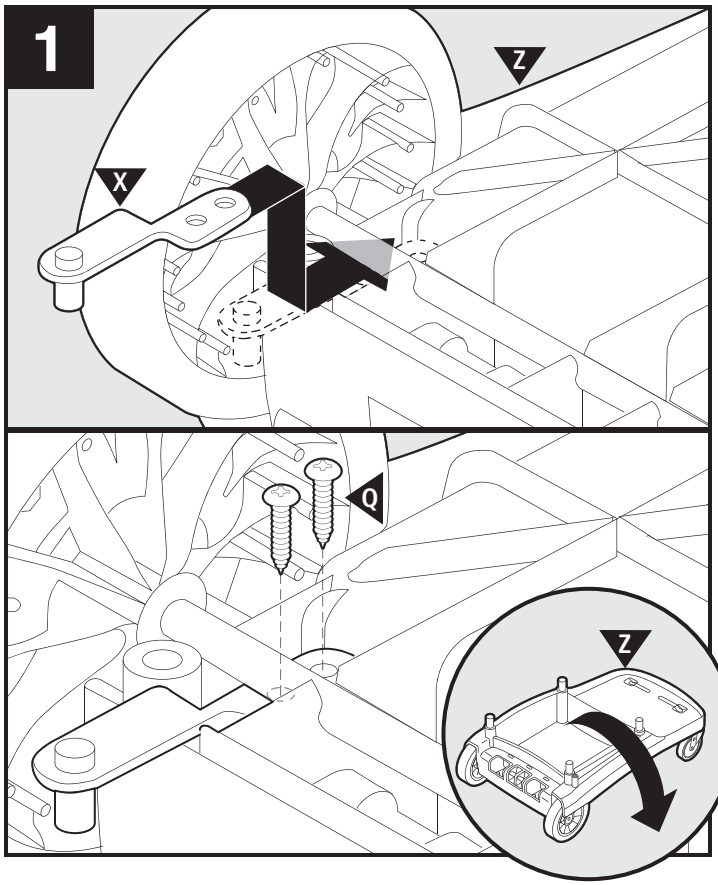
1
Z
X
Q
Z

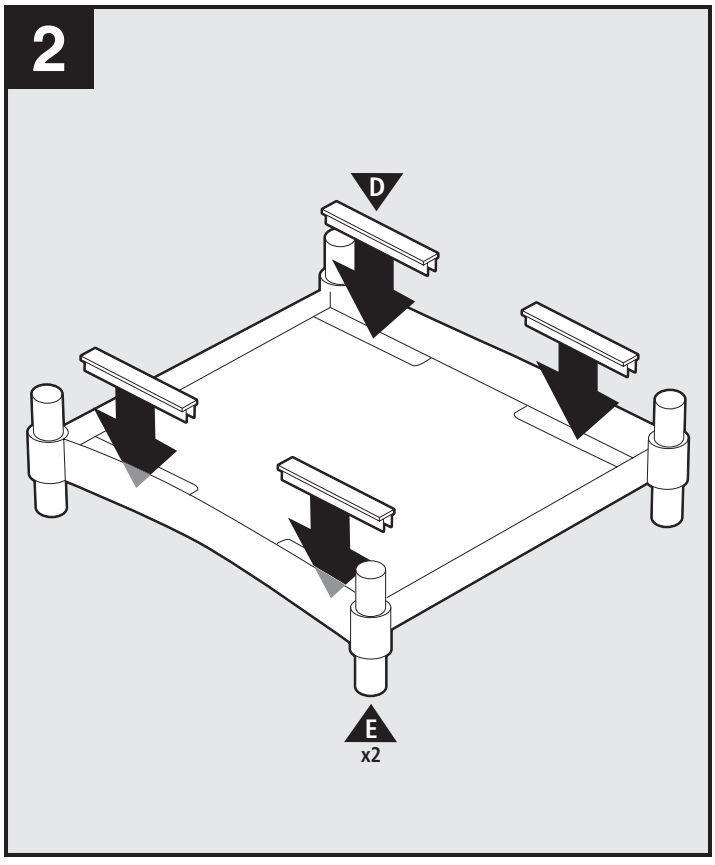
2
D
E
x2

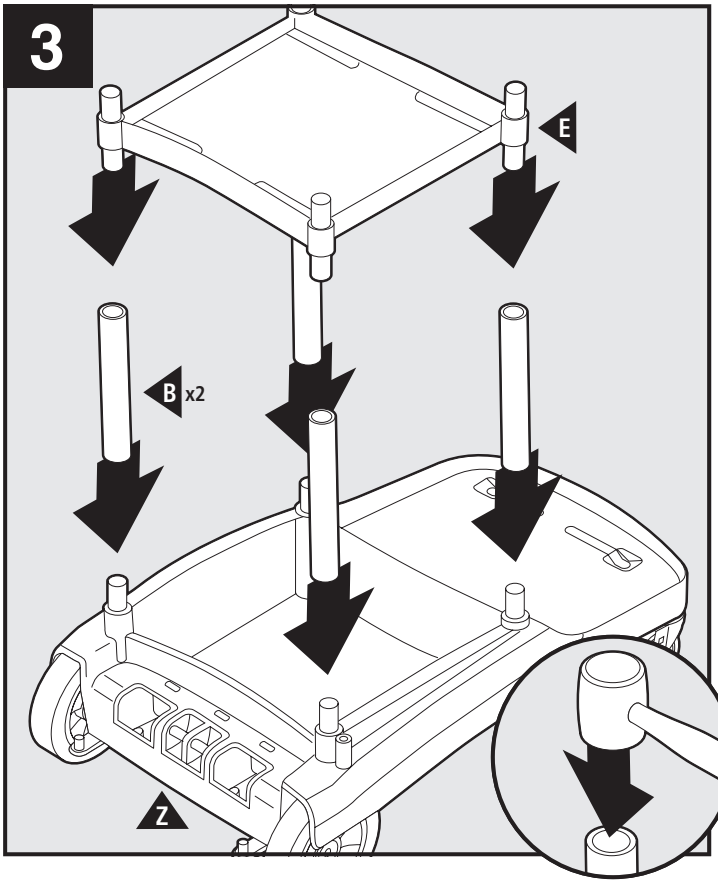
3
E
B x2
Z

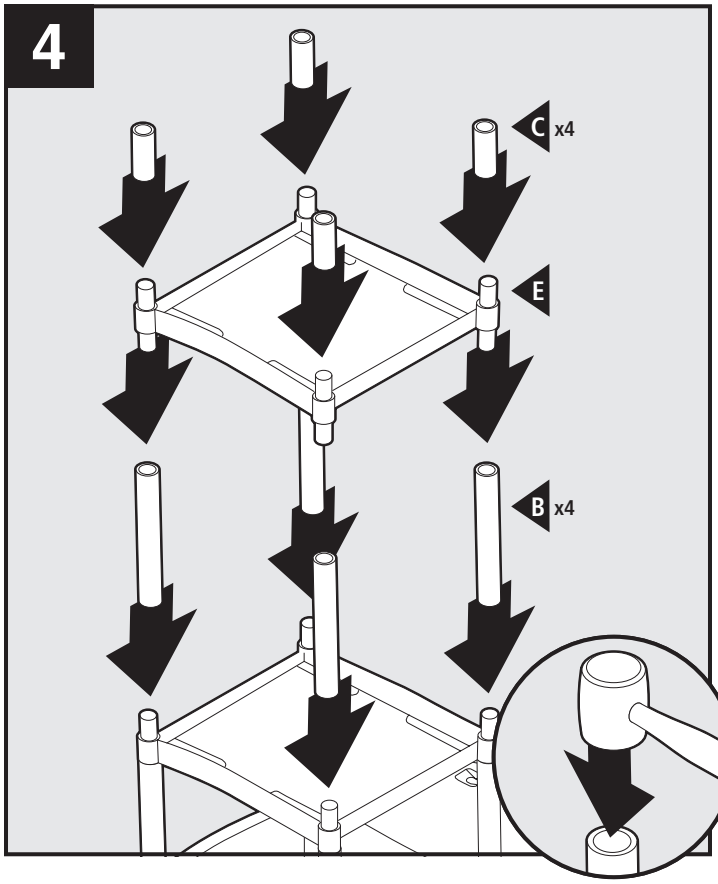
4
C x4
E
B x4

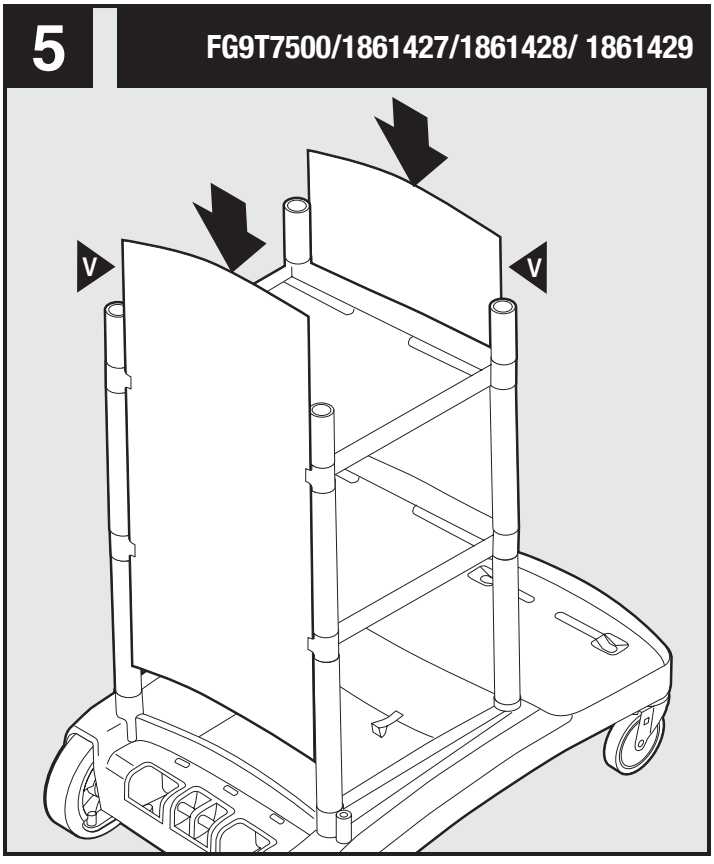
5
FG9T7500/1861427/1861428/ 1861429
V
V

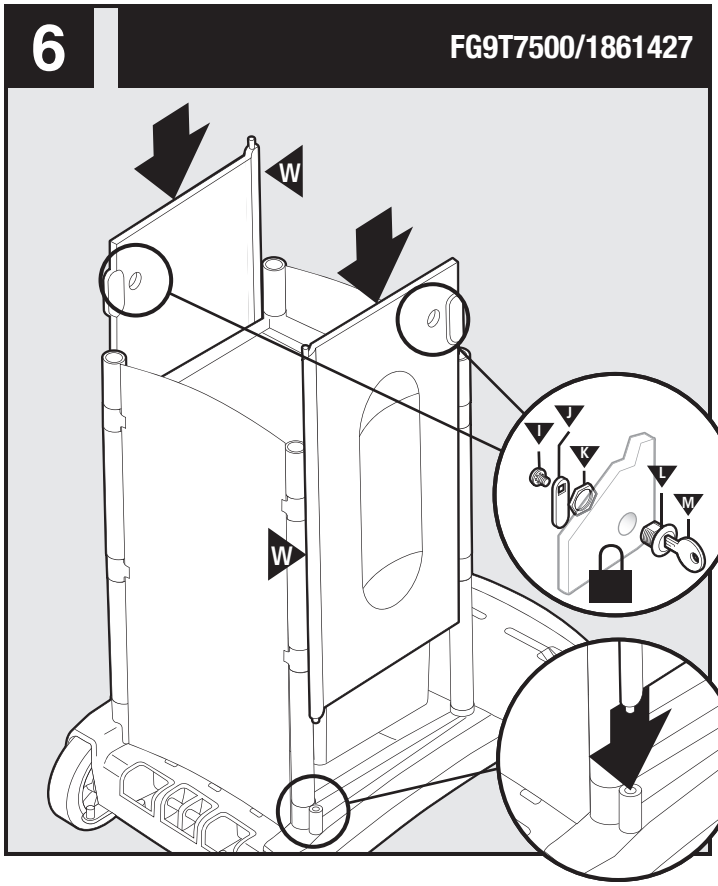
6
FG9T7500/1861427
W
W
I
J
K
L
M

JUNE 14, 2019

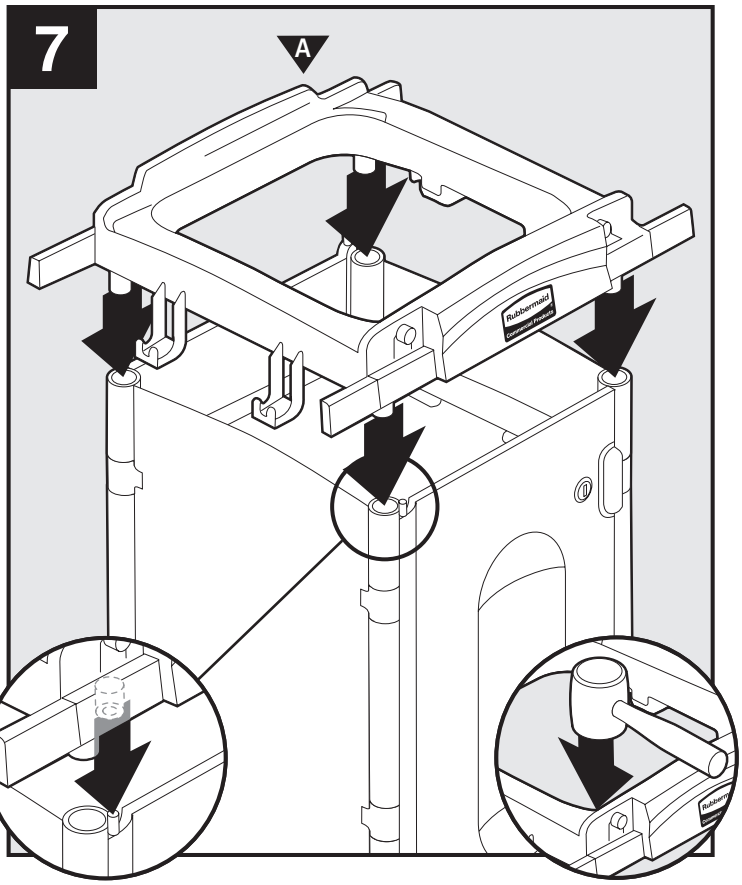
7
A

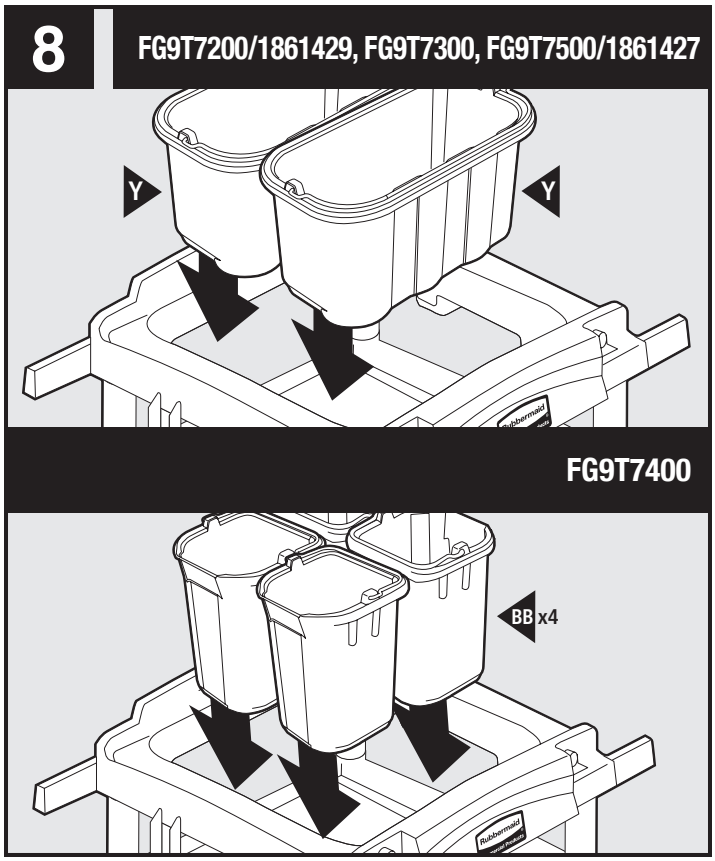
8
FG9T7200/1861429, FG9T7300, FG9T7500/1861427
Y
Y
FG9T7400
BB x4

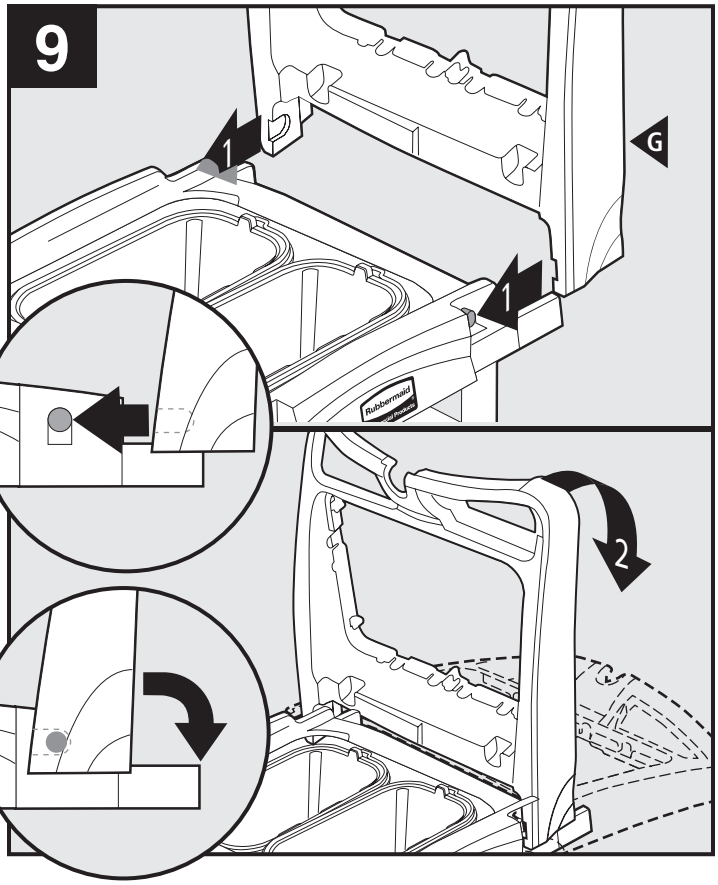
9
G
1
1
2

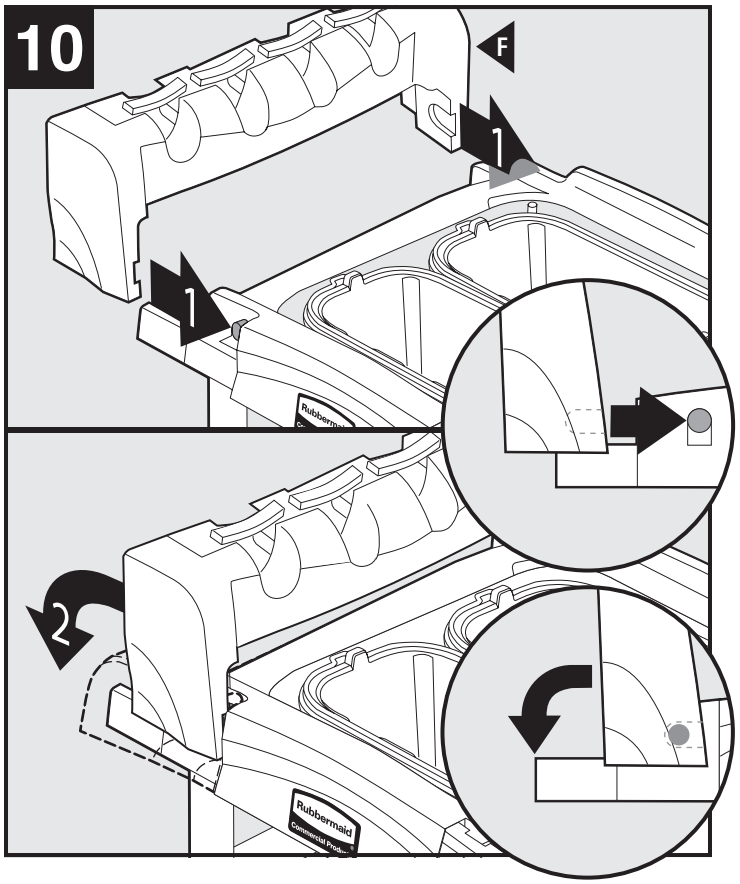
10
F
1
1
2

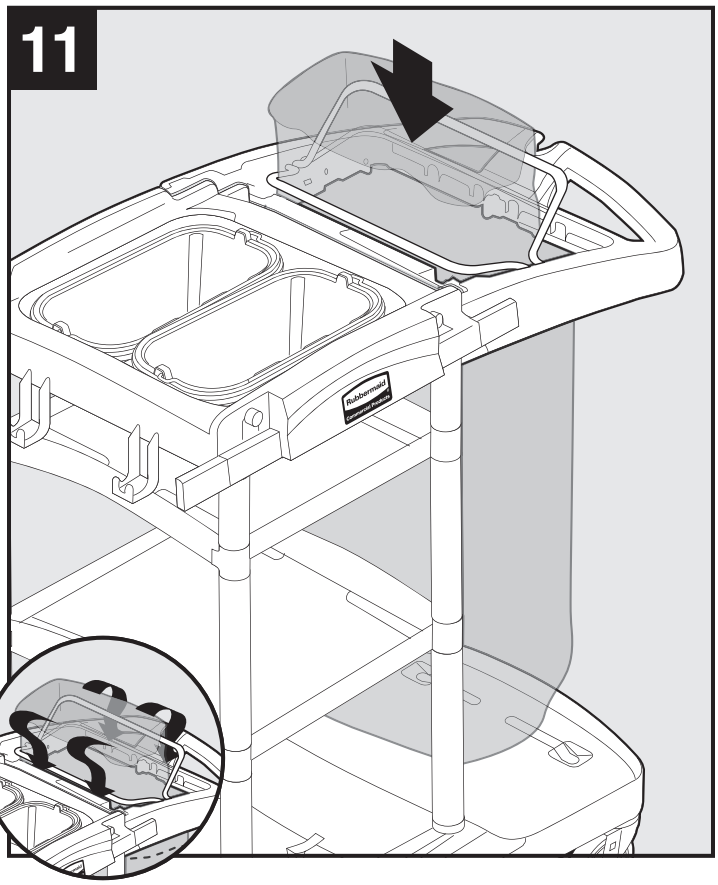
11

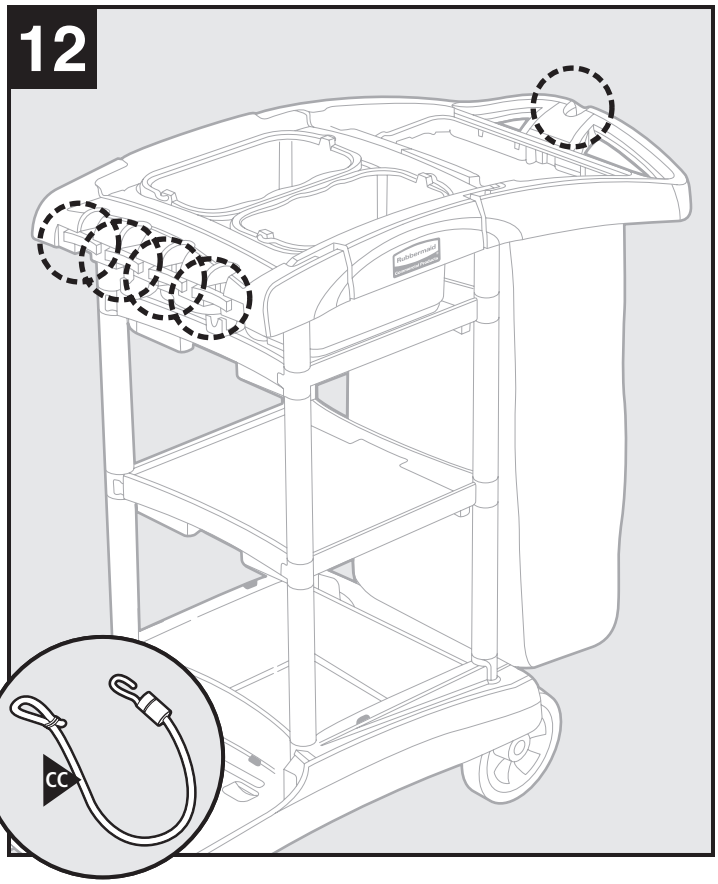
12
CC

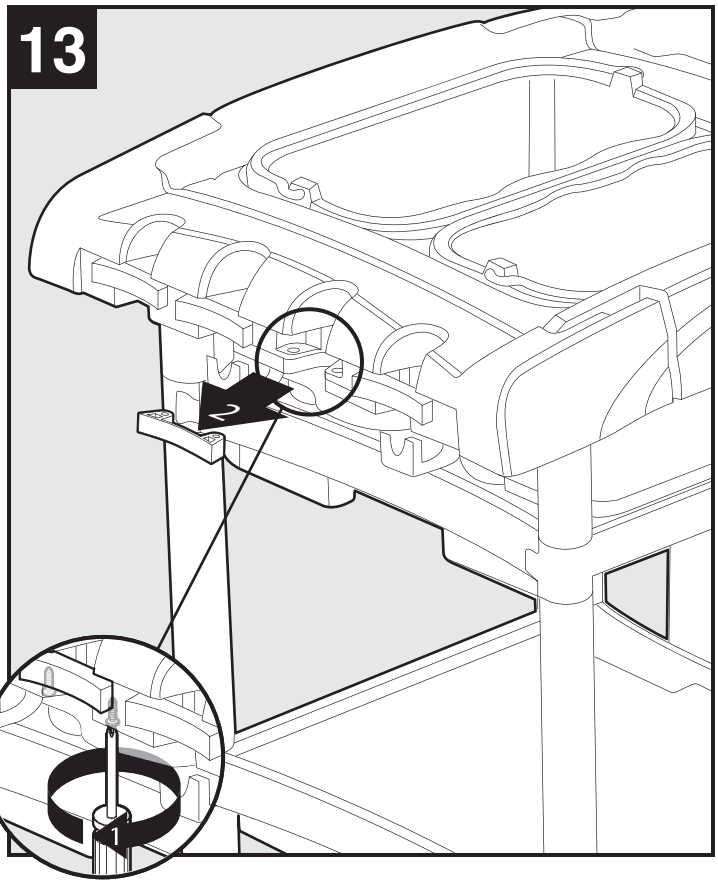
13
2
1

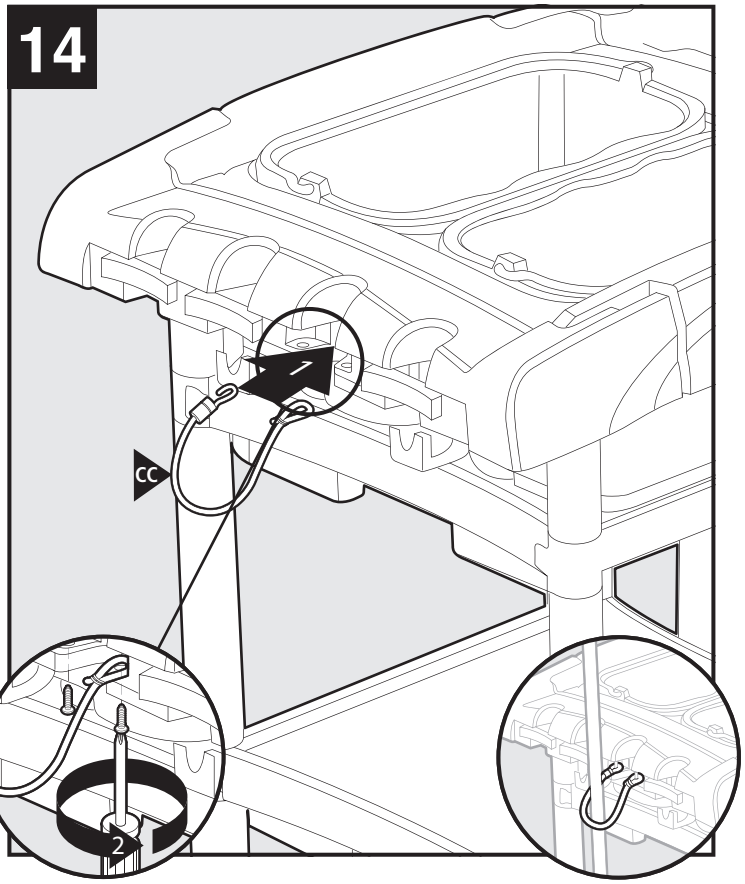
14
1
CC
2

15 FG9T7300/1861428, FG9T7400, FG9T7500/1861427

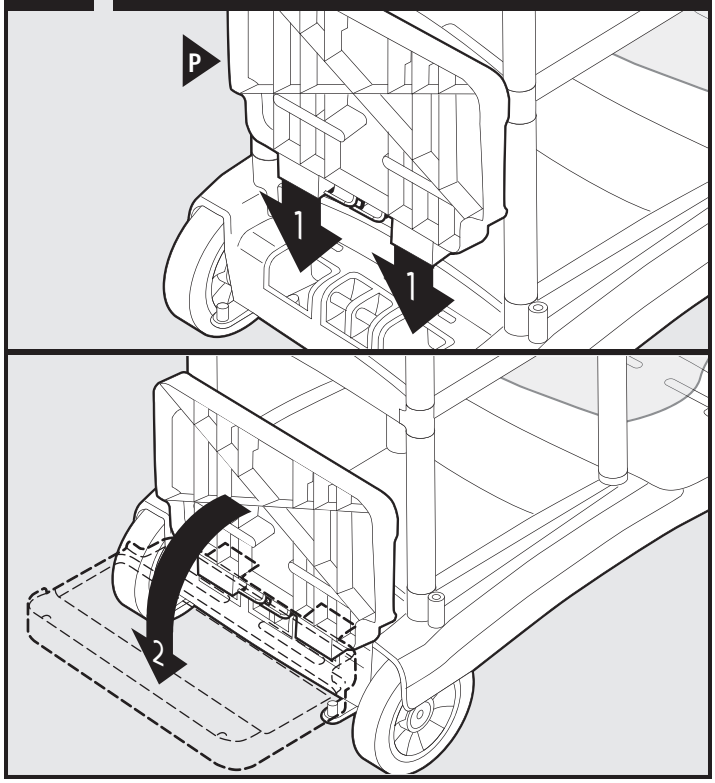

16 FG9T7300/1861428, FG9T7400, FG9T7500/1861427

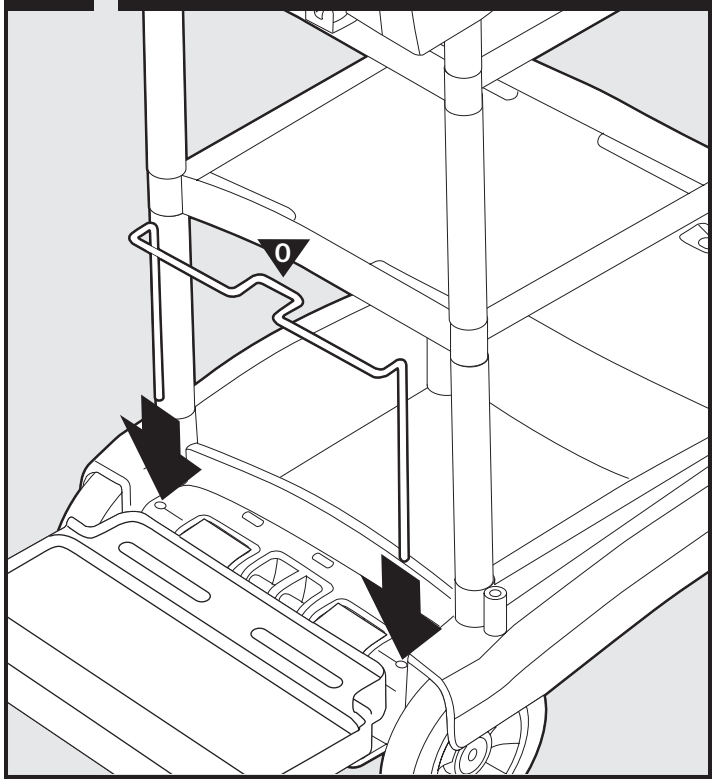

17 FG9T7300/FG9T7400

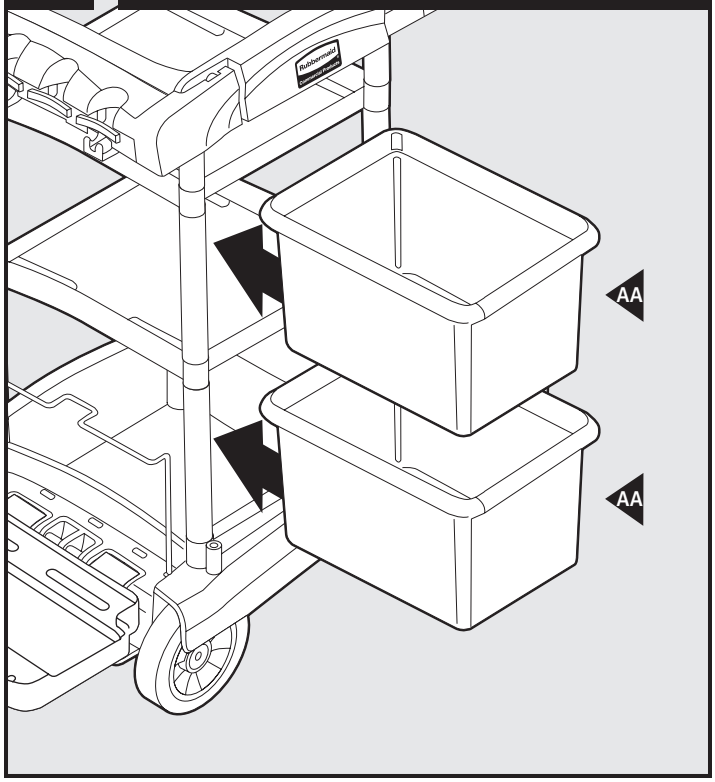

18 FG9T7500/1861427

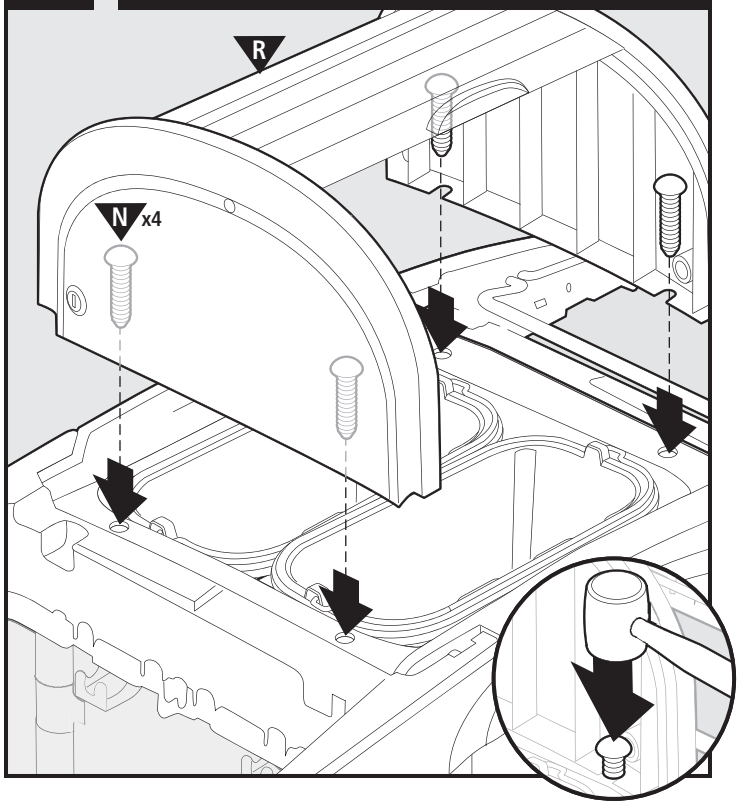

9T75

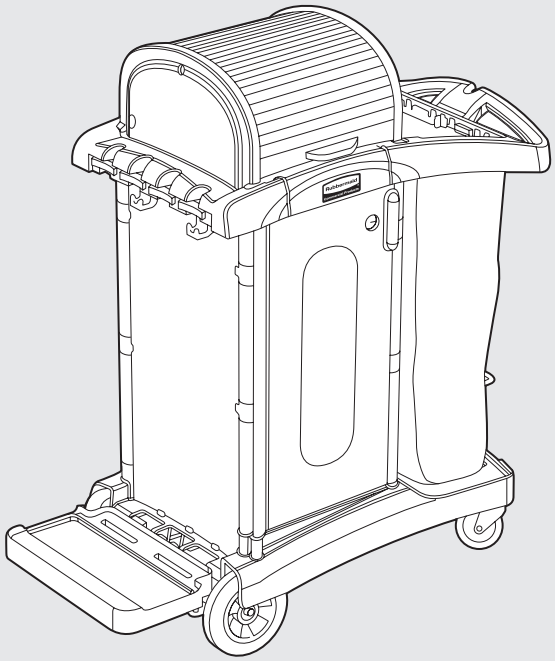

19 FG9T7200/1861429, FG9T7300/1861428, FG9T7400

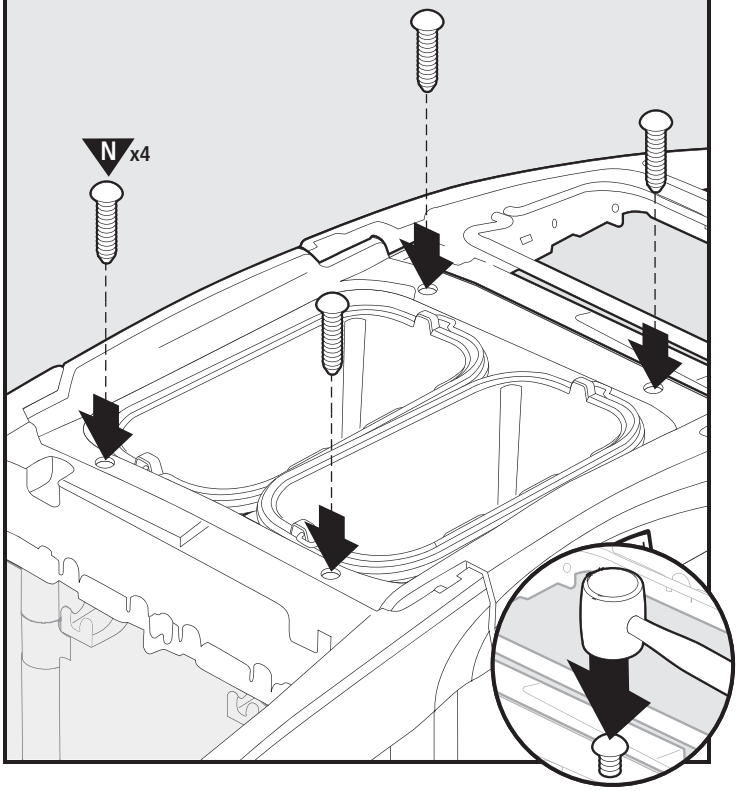

FG9T7200/FG9T7300/FG9T7400

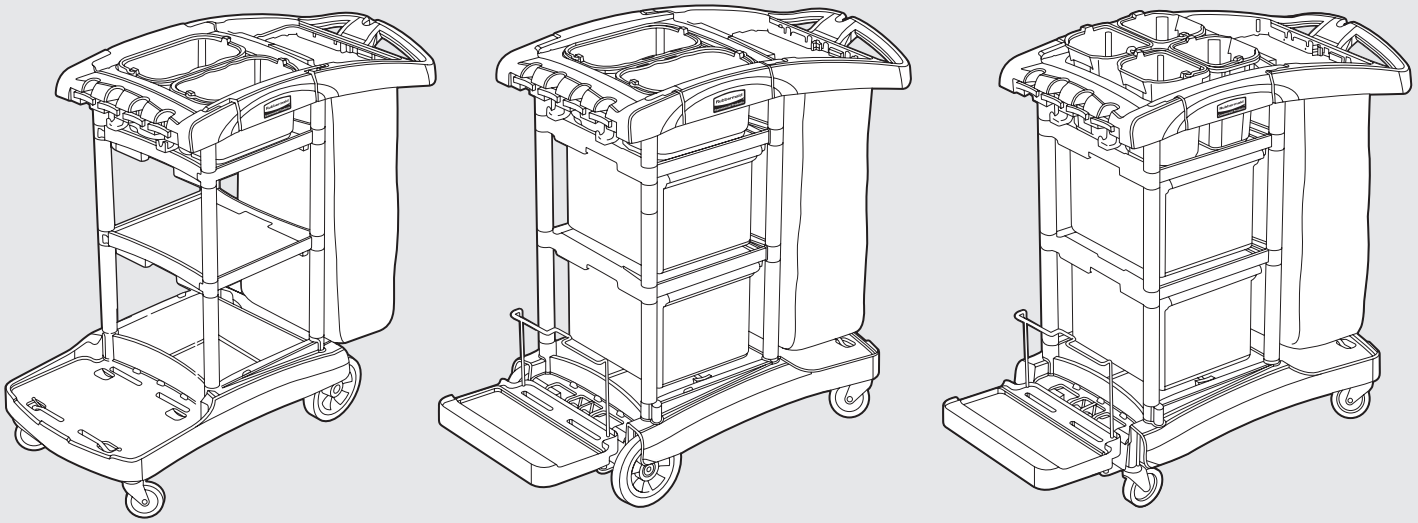

Options

FG9T7200/1861429

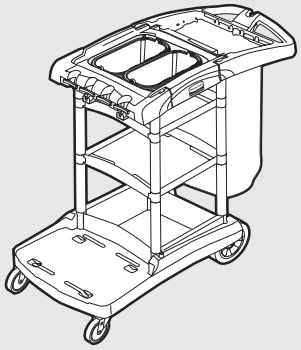

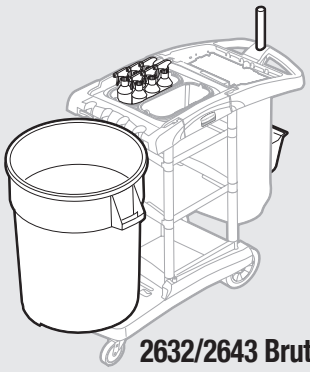

2632/2643 Brute

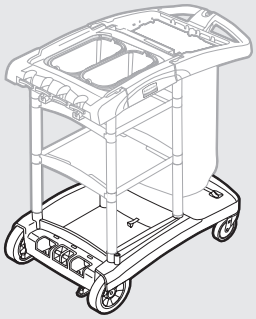

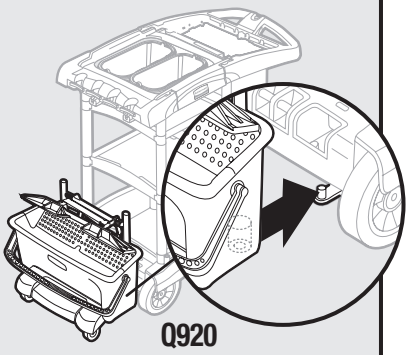

Q920

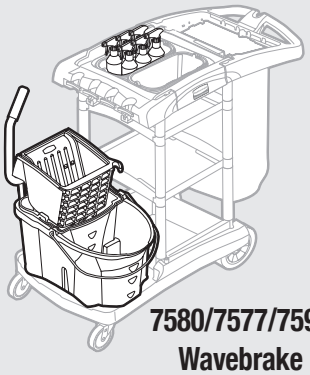

7580/7577/7590
Wavebrake

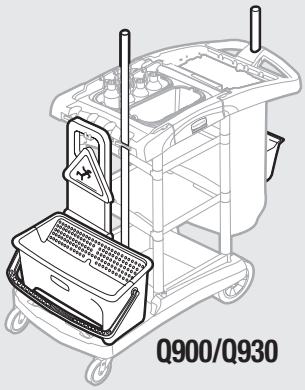

Q900/Q930

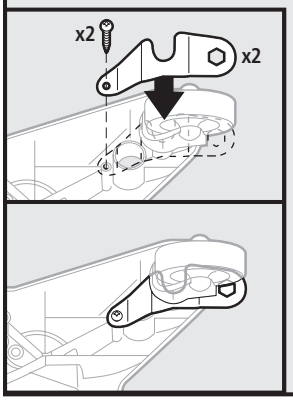

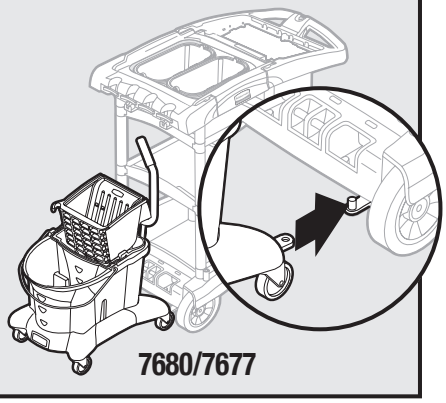

7680/7677

FG9T7300/FG9T7400/1861428

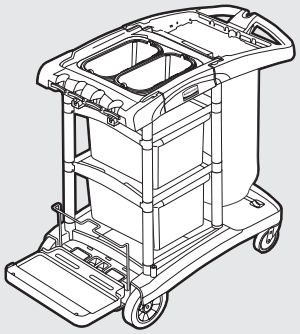

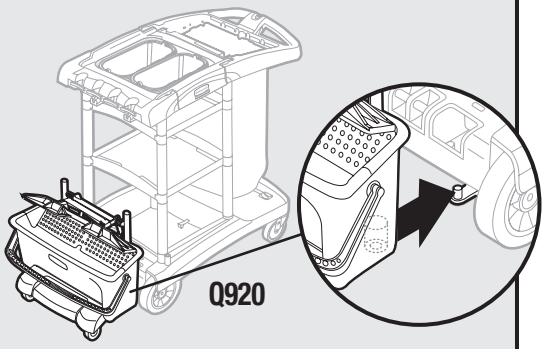

Q920

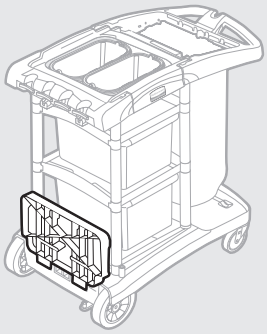

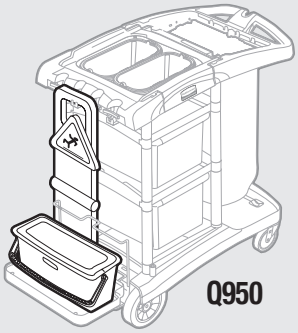

Q950

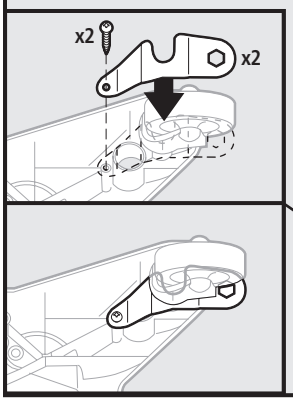

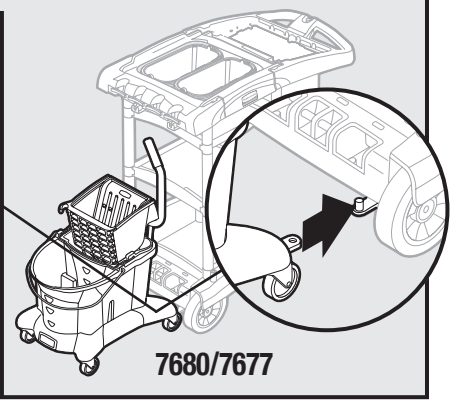

7680/7677

Products manufactured under quality management system registered to ISO 9001:2008
©2013 Rubbermaid Commercial Products LLC

Product # FG9T7200, FG9T7300, FG9T7400, FG9T7500, 1861427, 1861428, 1861429

JUNE 14, 2019

Rubbermaid®
Commercial Products

Rubbermaid Commercial Products LLC
3124 Valley Avenue
Winchester, VA 22601 U.S.A.
Phone: 1-800-347-9800
www.rubbermaidcommercial.com
1877582

Spectrum™ 15D & 18D

Dual Motor Upright Vacuums

More Productivity. Better Filtration. Better Value.

Advance's 15 and 18 inch Spectrum dual-motor upright vacuums deliver the superior performance results expected from Advance vacuums: dirt pickup and filtration. Upright vacuums rely on a combination of dirt pickup to remove soil from carpets and filtration to ensure that dust and other airborne particles stay captured. With the addition of a brush motor, the Spectrum dual-motor vacuum has a total of 1,350 watts of power. Operators now have single pass power in an upright vacuum, which results in greater productivity. According to independent testing by ISSA, dual motor vacuums generate 16% greater productivity then single motor vacuum of the same width*. The unique design of the power head creates a seal with the carpet surface to agitate and capture dirt and dust that other dual motor vacuums miss.

Spectrum's innovative design has earned the CRI (Carpet & Rug Institute) Seal of Approval – signifying that Spectrum meets the industry's newest dirt pickup and filtration standards for vacuum performance. These standards are more stringent than those used previously for Green Label certification. And, at a budget conscious price, it offers better performance and increased productivity at a fraction of the cost to clean.

True soil removal also requires proper filtration to ensure that dirt particles are not released back into the air. CRI standards require a vacuum to emit less than 100 micrograms of dust per cubic meter of airflow exhaust and consider ratings of less than 25 micrograms to be exceptional. Spectrum dual motor vacuums emit just 6 micrograms per cubic meter of airflow exhaust, an astounding measure that says when Spectrum picks up dirt, it stays picked up! Spectrum's filtration performance is due to the vacuum's three-stage filtration system, which includes a certified H.E.P.A. filter – an important distinction that guarantees each filter has been tested for true H.E.P.A. performance by an independent third-party laboratory. This true soil removal results in superior indoor air quality that operators and building occupants are sure to appreciate.

A full complement of tools and user-friendly design features make Spectrum easy to use and maintain. Operators will appreciate the versatile quick-draw detailing wand, simple brush and handle height adjustments and the convenient cord restraint and storage features. Vacuum maintenance is a breeze thanks to features such as a bag full/clog light, unique quick-change bag design, and a service-free belt system with a two-year warranty.

Spectrum dual motor vacuums actually outperform upright vacuums sold at up to twice the price. When compared on dirt pickup and filtration, Spectrum literally leaves its more expensive counterparts in the dust.

Standard Accessories Include

- Crevice tool
- Upholstery tool

Typical Applications Include

- Hotels / Motels
- Hospitality
- Hospitals
- Long-term Care Facilities
- Building Service Contractors
- Retail Facilities
- Government Facilities
- Education

Features and Benefits

- CRI Seal of Approval for vacuums
- Better dirt pickup than competitors
- Better filtration – certified H.E.P.A. filter standard

Advance by Nilfisk

Spectrum™ 15D & 18D

Dual Motor Upright Vacuums

Quick change bag is the first level of filtration.

Cord restraint protects against cord abuse.

Tools-free access to remove brush.

Certified H.E.P.A. is the final filtration stage.

Accessories are conveniently tucked behind the vacuum wand.

1. *50 foot safety yellow cord*
2. *Heavy duty cord restraint*
3. *Adjustable height handle*
4. *Convenient front handle for lifting*
5. *Certified H.E.P.A. filter*
6. *Easy release foot pedal turns the brush motor on or off when in the upright position*
7. *Easy to adjust brush height warning light alerts operators when the brush is to low*
8. *Tools-free removable brush*
9. *Non-marking wrap-around bumper*

Defining Cleaning Innovation…

- Our products are designed using innovative technology that increases productivity and drives down the cost to clean.
- You can get expert service and maintenance for your Advance machines from factory-trained personnel around the world. Fast parts delivery, too.
- Maintain peak performance with Nilfisk Parts.

Technical Specifications

Model	Spectrum™ 15D	Spectrum™ 18D
Vacuum Motor	120 V, 60 Hz, 1,000 W, 9 amp, 2-stage	120 V, 60 Hz, 1,000 W, 9 amp, 2-stage
Brush Motor	120 V, 60 Hz, 350 W	120 V, 60 Hz, 350 W
Motor Protection	Airflow bypass valve and thermal overload protection	Airflow bypass valve and thermal overload protection
Suction (waterlift) / Airflow	92 in / 93 cfm	92 in / 93 cfm
Brush	Dual row, chevron style, nylon with variable manual adjustment	Dual row, chevron style, nylon with variable manual adjustment
Brush Speed	2,800 RPM	2,800 RPM
Cleaning Path	14.5 in (36.8 cm)	17.5 in (44.5 cm)
Filtration	2-ply paper filter bag, motor protection filter, certified H.E.P.A. exhaust filter	2-ply paper filter bag, motor protection filter, certified H.E.P.A. exhaust filter
Bag Capacity	4.2 qt (4 L)	4.2 qt (4 L)
Power Cable	50 ft (15 m) 18/3 wire, safety yellow	50 ft (15 m) 18/3 wire, safety yellow
Sound Level	69 dB A	69 dB A
Onboard Tools	4:1 stretch hose, wand, crevice and upholstery tools	4:1 stretch hose, wand, crevice and upholstery tools
Dimensions (LxWxH)	13 in x 15 in x 44 in (33 cm x 38 cm x 113 cm)	13 in x 18 in x 44 in (33 cm x 46 cm x 113 cm)
Weight (with cord)	21.3 lb (9.7 kg)	22 lb (10 kg)
Warranty	Motor and belts – 2 years Non-wear parts – 1 year, labor – 1 year	Motor and belts – 2 years Non-wear parts – 1 year, labor – 1 year
Model Number	9060407010	9060507010

Specifications are subject to change without notice.

Nilfisk, Inc.

9435 Winnetka Avenue North
Brooklyn Park, MN 55445
www.advance-us.com
Phone 800-850-5559
Fax 800-989-6566

240 Superior Boulevard
Mississauga, Ontario, Canada L5T 2L2
www.nilfisk-advance.ca
Phone 800-668-8400
Fax 800-263-5111

Advance by Nilfisk

JUNE 14, 2019

recyclable

©2017, Nilfisk, Inc. Printed in U.S.A., Form L3089A, 7-17

Single and Dual Speed Floor Machines

High-performance, proven floor machines from the leader in floor care.

These durable floor machines are proven performers for polishing, scrubbing and stripping most any hard floor surface.

Long-life, durable construction
Our floor machines are made from durable, corrosion-proof, polyethylene.

Superior performance with low maintenance
With a dramatically-simplified design, and a heavy-duty 1.5 hp / 1.12 kW motor, these single and dual speed floor machines require little maintenance while delivering superior cleaning and maintenance results.

Key Benefits

- Superior performance from heavy-duty 1.5 hp / 1.12 kW motors and pad drivers
- Simple twist grip operation with safety lock to protect operators
- Single or dual speeds with optional solution tank offer versatile cleaning performance

1400-21 02/10

©2010 Tennant and Nobles are registered trademarks of Tennant Company, whose products are sold and serviced through Tennant Sales and Service Company, as well as through distributors.

JUNE 14, 2019

Tennant
701 North Lilac Drive
Minneapolis, MN
55440-1452, USA

800.553.8033
763.540.1200
In Quebec: 514.335.6061

www.tennantco.com
info@tennantco.com

Single and Dual Speed Floor Machines

Features	Specifications*		
Product Name	FM-17-SS	FM-20-SS	FM-20-DS
Pad Drive System			
Brush rpm	175 rpm		185 rpm (scrub)/330 rpm (buff)
Motor Volts	120 V		120 V
Motor HP	1.5 hp / 1.12 kW		1.5 hp / 1.12 kW
Motor Type	AC, 66 frame, circuit breaker protected, triple planetary, precision gear box, 10:1 gear ratio		Permanent magnet DC, 66 frame, dual speed, circuit breaker protected, triple planetary, precision gear box, 10:1 gear ratio
Motor Amps	12 A		12 A
Motor Watts	1100 watts		1100 watts
Construction			
Handle	Twist grip operation with safety lock		
Base/ Handle	Corrosion-proof rotationally-molded polyethylene		
Dimensions			
Product Height	48 in / 1219 mm	48 in / 1219 mm	48 in / 1219 mm
Product Length	22.75 in / 578 mm	23.50 in / 597 mm	23.50 in / 597 mm
Product Weight	97 lb / 44 kg	97 lb / 44 kg	97 lb / 44 kg
Product Width	17 in / 403 mm	20 in / 510 mm	20 in / 510 mm
Productivity			
Max. Coverage (per hour)	2000 ft^2 / 185.8 m^2	3000 ft^2 / 278.7 m^2	3000 ft^2 / 278.7 m^2
Decibel Rating			
Rating at operator's position	60 dBA		71 dBA
Power Cord			
Length	50 ft / 15.24 m		
Power Cord Type	14 gauge, 3-wire, SJT		
Solution Delivery System (Optional)			
Tank Volume	3 gal / 11.36 L	3 gal / 11.36 L	3 gal / 11.36 L
Nominal Solution Flow Rate	.1 gpm / .38 L/min	.1 gpm / .38 L/min	.1 gpm / .38 L/min
Coverage Rate Per Tank	1000 ft^2 (92.9 m^2) / tank	1500 ft^2 (135.35 m^2) / tank	1500 ft^2 (135.35 m^2) / tank
Approvals	CSA, ETL		
Warranty	See your sales representative or authorized distributor for complete warranty details.		

*Specifications subject to change without notice

1400-21 02/10

©2010 Tennant and Nobles are registered trademarks of Tennant Company, whose products are sold and serviced through Tennant Sales and Service Company, as well as through distributors.

JUNE 14, 2019

Tennant
701 North Lilac Drive
Minneapolis, MN
55440-1452, USA

800.553.8033
763.540.1200
In Quebec: 514.335.6061

www.tennantco.com
info@tennantco.com

CREATING A CLEANER, SAFER, HEALTHIER WORLD.

EQUIPMENT

E5

COMPACT, LOW-PROFILE CARPET EXTRACTOR

- Carpet cleaning results with excellent deep cleaning technology
- Improve productivity and cleaning results in congested and hard-to-reach areas with low-profile, compact design
- Reduce operator fatigue and improve productivity with low-effort pull-back operation and Insta-Adjust™ ergonomic handle

JUNE 14, 2019

E5
COMPACT, LOW-PROFILE CARPET EXRTACTOR

CLEANING SYSTEM

Cleaning path	15 in / 380 mm

BRUSH DRIVE SYSTEM

Brush motor	0.4 hp / 0.30 kW
Brush speed	1,200 rpm

SOLUTION SYSTEM

Solution tank capacity	5 gal / 19 L
Solution pump pressure	65 psi / 4.458 bar
Spray jet count	2-quick connect

RECOVERY SYSTEM

Recovery tank capacity	5 gal / 19 L
Waterlift	86 in / 2,180mm
Vacuum motor	1.2 hp / 0.89 kW

POWER SYSTEM

Power cord length	50 ft / 15 m

MACHINE SPECIFICATIONS

Length	27 in / 690 mm
Width	19 in / 480 mm
Height	28 in / 710 mm
Weight	102 lb / 46 kg
Sound level (operator's ear)	69 dBA

WARRANTY

See your local representative for warranty information.

Optional tools available.

Specifications subject to change without notice.

EXCEPTIONALLY POWERFUL DEEP CLEANING PERFORMANCE IN CONGESTED AREAS

OUTSTANDING CLEANING PERFORMANCE

Maximize cleaning performance across the entire cleaning path with dual overlapping spray jets and exceptional vacuum suction. Unique double-tuft float-adjust brush design adjusts to different carpet pile depths – no manual adjustment needed.

DEEP CLEAN AROUND AND UNDER OBSTACLES

Easily clean around and under objects like beds, desks, and tables with the compact, low-profile design. The Insta-Adjust™ handle extends cleaning reach.

EASY TO USE AND MAINTAIN

Easy to fill, empty, and clean Hygenic® tanks offer a unique compact design. Ergonomic handles and grips ensure easy pick-up.

SEEING IS BELIEVING

For a demonstration or additional information,
call +1.800.553.8033 or email info@tennantco.com

Tennant
701 North Lilac Drive
Minneapolis, MN 55422 USA

USA/Canada: +1.800.553.8033
Quebec: +1.800.361.9050
Overseas: +1.763.540.1315

www.tennantco.com
info@tennantco.com

1.025.001.am.en E5 Sell Sheet 4/13
©2013 The Tennant Company logo and other trademarks designated with the symbol "®" are trademarks of Tennant Company registered in the United States and/or other countries. Tennant Company's products are sold and serviced through subsidiaries of Tennant Company and distributors. All rights reserved.

JUNE 14, 2019

CREATING A CLEANER, SAFER, HEALTHIER WORLD.

T300/T300e ORBITAL

WALK-BEHIND FLOOR SCRUBBER

Delivering high performance and consistent results for virtually any hard surface condition while lowering cleaning costs

JUNE 14, 2019

IMPROVE THE EFFECTIVENESS OF YOUR CLEANING RESOURCES, INVESTMENTS, AND OPERATIONS

REDUCE COST TO CLEAN

- **Reduce costs to clean** by virtually eliminating slippery floor stripping chemicals and postponing expensive and time consuming stripping.
- **Standardize your cleaning operations** with programmable Zone Settings™.
- **On-board machine instructions** help ensure machine is operated in a safe manner for better results, simplified training, and reduced costs to clean.
- **Increase runtime by up to 46%** with 2200 1/4" RPMs.*

ENHANCE FACILITY IMAGE

- **Easily clean textured and grouted floors** through consistent down pressure and multiple pad options.
- **Ensure consistent cleaning performance and full pad saturation** with unique solution disbursement system.
- **Reduce machine noise levels** to as low as 58 dBA for daytime cleaning and in sound sensitive areas with Quiet-Mode™.

IMPROVE HEALTH AND SAFETY

- **Minimize risk of slip-and-fall accidents** and ensure dirt and soils are removed from the floor with updated squeegee design.
- **Ensure operator comfort** and reduce vibrations with 10 long-lasting isolators.

MINIMIZE ENVIRONMENTAL IMPACT

- **Quickly and easily remove floor finish** with high RPMs, heavy down pressure, and surface prep pad without using caustic stripping chemicals.
- **Reduce water consumption** and disposal of cleaning detergents into the waste stream with ec-H2O NanoClean® technology.

*When compared to Tennant 20" (50 cm) self-propel disk machine.

SAVE TIME AND MONEY ON EQUIPMENT AND TRAINING WHILE IMPROVING YOUR FACILITY'S IMAGE

ONE MACHINE. MAXIMUM VERSATILITY.

Maximize your return on investment with the T300 or T300e Orbital scrubbing machine, ideal for daily cleaning or chemical-free floor finish removal for a wide variety of markets, applications and floor types.

MARKETS:
Education
Healthcare
Retail
Hospitality

APPLICATIONS:
Aisle Ways
Checkout Counters
Classrooms
Entryways
Cafeterias
Kitchens

FLOOR TYPES:
Uneven and Textured Floors
Grouted Ceramic and Porcelain Tile
VCT
Polished Stone
Marmoleum
Teknoflor®

Marmoleum®

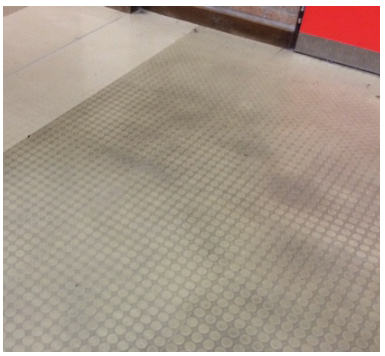
Textured Floor

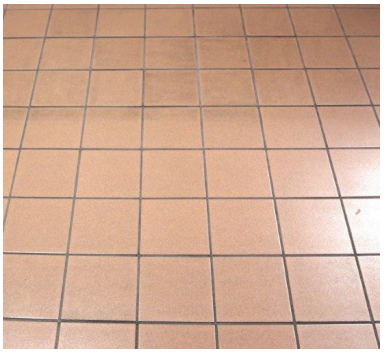
Grouted Tile

Polished Stone

KEY OPTIONS

ec-H2O NanoClean® technology electronically converts water into an innovative detergent-free cleaning solution.

ec H2O® NanoClean

JUNE 14, 2019

Tennant provides multiple cleaning pads to address a variety of cleaning conditions.

Effortlessly clean edges, corners and baseboards using rectangular cleaning head options.

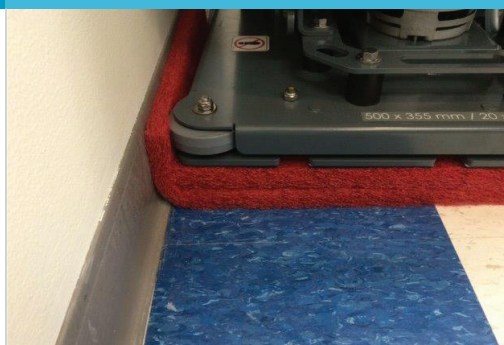

TENNANT*TRUE*® PARTS, SERVICE AND FINANCE SOLUTIONS

- Reduce rework, labor and safety costs by using only Tennant*True* parts and service.
- Ensure optimal cleaning performance by selecting a Tennant*True* Service program provided by a network of over 400 factory-trained Tennant service representatives.
- Improve uptime by leveraging Tennant*True* parts and service.
- Simplify budgeting by bundling Tennant*True* service plans, including parts, into the purchase or financing of your machine.

ENVIRONMENTAL STEWARDSHIP

ec-H2O NanoClean® technology is NFSI (National Floor Safety Institute) Certified

ec-H2O NanoClean technology is registered by NSF International

Lease. Pre-Owned. Rent. Tennant has flexible options that get you the machines you need, however you need them.

T300/T300e ORBITAL WALK-BEHIND FLOOR SCRUBBER

	T300 20 IN/500 MM SELF-PROPEL	T300e 20 IN/500 MM SELF-PROPEL
SCRUBBING SYSTEM		
Control panel		
Membrane™ Panel	Optional	–
Pro-Membrane™ Panel	Optional	–
Pro-Panel™	Optional	–
Instructional Overlay	–	Standard
Productivity (per hour)		
Theoretical Max	20,000 ft² / 1,858 m²	20,000 ft²/1,858 m²
Estimated Coverage*		
Conventional	14,943 ft² / 1,388 m²	14,943 ft²/1,388 m²
ec-H2O NanoClean®	15,469 ft² / 1,437 m²	15,469 ft²/1,437 m²
BRUSH DRIVE SYSTEM		
Scrub motor	0.6 hp / 0.45 kW	0.6 hp/0.45 kW
Brush/pad RPM	2,200 rpm	2,200 rpm
Brush/pad pressure	63, 92, 109 lbs / 29, 42, 49 kg	63 lbs/29 kg Optional 109 lbs/49 kg
SOLUTION/RECOVERY SYSTEM		
Solution tank capacity	11 gal / 42 L	11 gal/42 L
Recovery tank capacity	14 gal / 53 L	14 gal/53 L
Vacuum motor	24 VDC, 0.6 hp / 0.47 kW	24 VDC, 0.6 hp/0.37 kW
Vacuum waterlift	42 in / 1067 mm	34.5 in / 876 mm
Vacuum waterlift with Quiet-Mode™	28 in / 711 mm	–
CLEANING TECHNOLOGY		
Conventional	Standard	Standard
ec-H2O NanoClean	Optional	Optional
ec-H2O NanoClean with Severe Environment switch	Optional	–
BATTERY SYSTEM		
System voltage	24 volt	24 volt
Battery types (Wet 105AH, Wet 130AH, Wet 150AH, Sealed AGM 140AH)	2 required	2 required
Battery run time (up to hours)**	3.8	3.7
On-board charger	Standard	Standard
Off-board charger	Optional	Optional
MACHINE SPECIFICATIONS		
Length	49 in / 1,245 mm	49 in/1,245 mm
Width	20.5 in / 521 mm	20.5 in/521 mm
Height	43.10 in / 1,095 mm	43.10 in/1,095 mm
Weight (without batteries)	255 lbs / 116 kg	255 lbs/116 kg
Weight (with batteries)	415 lbs / 188 kg	415 lbs/188 kg
Sound level (operator's ear)***	66.4 dBA	67.5 dBA
Quiet-Mode (operator's ear)***	57.6 dBA	–

WARRANTY

See your local representative for warranty information

* Estimated coverage rates use the practical speed and empty/fill time standards from the 2004 ISSA Cleaning Times handbook.
** Run times are based on continuous scrubbing run times.
*** Sound levels per ISO 11201 as recommended by the American Association of Cleaning Equipment manufacturers & OSHA.

Specifications subject to change without notice.

SEEING IS BELIEVING

For a demonstration or additional information, call +1.800.553.8033 or email info@tennantco.com

Tennant
701 North Lilac Drive
Minneapolis, MN 55422 USA

USA/Canada: +1.800.553.8033
Quebec: +1.800.361.9050
Overseas: +1.763.540.1315

www.tennantco.com
info@tennantco.com

1.063.005.am.en T300 Orbital Brochure 11/16
©2016 The Tennant Company logo and other trademarks designated with the symbol "®" are trademarks of Tennant Company registered in the United States and/or other countries. Tennant Company's products are sold and serviced through subsidiaries of Tennant Company and distributors. All rights reserved.

JUNE 14, 2019

CREATING A CLEANER, SAFER, HEALTHIER WORLD.

EQUIPMENT

B5/B7

BATTERY POWERED WALK-BEHIND BURNISHER

- Ultra quiet machines – as low as 63 dBA – ensures safe sound levels
- Active filtration with HEPA standard – maintains indoor air quality
- 90 degree flip up head – enables a safe ergonomic position when changing pad

JUNE 14, 2019

B5/B7 BURNISHER

	B5		B7	
BURNISHING SYSTEM	20 IN / 510 MM PAD ASSIST	20 IN / 510 MM PROPEL	24 IN / 610 MM PROPEL	27 IN / 690 MM PROPEL
Path width	20 in / 510 mm		24 in / 610 mm	27 in / 690 mm
Productivity rate (max)	16,260 ft²/hr / 1,510 m²/hr	20,000 ft²/hr / 2,500 m²/hr	24,000 ft²/hr / 2,200 m²/hr	27,000 ft²/hr / 2,500 m²/hr
Productivity rate (practical) (2 in / 51 mm overlap)	13,500 ft²/hr / 1,260 m²/hr	18,000 ft²/hr / 1,670 m²/hr	22,000 ft²/hr / 2,000 m²/hr	25,000 ft²/hr / 2,300 m²/hr
PAD DRIVE SYSTEM				
Pad motor	36 V, 75 A, 2.8 hp max / 2.1 kW		36 V, 90 A, 3.6 hp max / 2.6 kW	
Pad speed	2100 rpm		1875 rpm	
Burnishing speed (variable)				
Min	Pad assist	100 fpm / 30 mpm	100 fpm / 30 mpm	
Max	Pad assist	200 fpm / 60 mpm	200 fpm / 60 mpm	
Transport speed (max)	—	240 fpm / 73 mpm	240 fpm / 73 mpm	
POWER SYSTEM				
Voltage	36 VDC		36 VDC	
Battery				
Wet/lead acid (standard)	3 - 12V, 185 Ah		6 - 6V, 240 Ah	6 - 6V, 330 Ah
AGM (optional)	3 - 12V, 234 Ah		6 - 6V, 312 Ah	
Wet/lead acid (optional)	3 - 12V, 225 Ah		6 - 6V, 360 Ah	
Battery run time*	185 Ah battery up to 2.0 hrs 225 Ah battery up to 2.5 hrs 234 Ah AGM battery up to 3.0 hrs		240 Ah battery up to 2.0 hrs 330 Ah battery up to 2.8 hrs 360 Ah battery up to 3.0 hrs 312 Ah AGM battery up to 2.8 hrs	
On-board charger	— Yes		Yes	
DUST CONTROL SYSTEM				
HEPA filtration	99.97% @ 0.3 microns		99.97% @ 0.3 microns	
Passive filtration (optional)	95% @ 0.3 microns		95% @ 0.3 microns	
MACHINE SPECIFICATIONS				
Length	59 in / 1,499 mm		61.5 in / 1562 mm	63 in / 1600 mm
Width	24.5 in / 622 mm		30 in / 762 mm	31.5 in / 800 mm
Height	43 in / 1,092 mm		43 in / 1,092 mm	
Weight (with batteries)	507 lbs / 230 kg	572 lbs / 259 kg	616 lb / 279 kg	797 lb / 362 kg
Sound level (operator's ear)				
Active	64 dBA		63 dBA	
Passive	65 dBA		65 dBA	
APPROVALS				
ETL listed (U.S./Canada only)	Yes		Yes	
WARRANTY				

See your local representative for warranty information.

*Runtimes will vary depending upon battery size and feature set. These factors can include functions such as push vs. self-propel, passive vs. active dust control, low vs. high down pressure and pad selection.

Specifications subject to change without notice.

Choose GE Capital or U.S. Bancorp, our leasing providers, for simple, quick financing with flexible upgrade options.

SEEING IS BELIEVING

For a demonstration or additional information, call +1.800.553.8033 or email info@tennantco.com

Tennant
701 North Lilac Drive
Minneapolis, MN 55422 USA

USA/Canada: +1.800.553.8033
Quebec: +1.800.361.9050
Overseas: +1.763.540.1315

www.tennantco.com
info@tennantco.com

1.059.001.am.en B5/B7 Sell Sheet 1/15
©2015 The Tennant Company logo and other trademarks designated with the symbol "®" are trademarks of Tennant Company registered in the United States and/or other countries. Tennant Company's products are sold and serviced through subsidiaries of Tennant Company and distributors. All rights reserved.

JUNE 14, 2019

3062-3062a-3062b

Waste > null

3540-60 Slim Jim® with Venting Channels

Features innovative patent-pending solutions that increase efficiency and improve worker well-being.

- Integrated, patent-pending venting channels take the strain out of liner removal.
- Space-saving profile fits virtually anywhere.
- Four patent-pending can liner cinches improve productivity.
- Molded-in handles and base grips make lifting and emptying easier.
- Available with Universal Recycling Symbol, SKU# 3540-07.
- Custom imprinting available; contact Rubbermaid Customer Service at (800) 347-9800 for details.

AVAILABLE COLORS

Order #	Color	Product UPC/ UCC Code
FG354060 GRAY	GRAY	086876186376 / 10086876186373
FG354060 BLA	BLA	086876186352 / 10086876186359
FG354060 BEIG	BEIG	086876186369 / 10086876186366

Gray
GRAY

Black
BLA

Beige
BEIG

SPECIFICATIONS

	U.S.	Metric
Length:	22 in	55.9 cm
Width:	11 in	27.9 cm
Height:	30 in	76.2 cm
Volume Capacity [Nom]:	23 gal	87.1 L
Volume Capacity [Max]:		
Volume Capacity [Min]:		
Carton Length:	22 in	55.9 cm
Carton Width:	11 in	27.9 cm
Carton Height:	49 1/2 in	125.7 cm
Carton Cube:	6.93 ft3	0.20 m3
Ship Weight/Carton:	30.60 lb	13.88 kg

Pack Quantity:	4
Cartons Per Pallet:	8

ADDITIONAL INFORMATION:

Product Sell Sheets: RCP_SM700_SlimJimVentingChannels.pdf
Chemical Resistance Guide: chem.pdf

Products in Slim Jim® with Venting Channels

Item #	Description	Length	Width	Height	Volume Capacity
3540-60	Slim Jim® with Venting Channels	22 in	11 in	30 in	23 gal

Accessories for 3540-60:

No.	Description
2688-88	Slim Jim® Handle Top for Slim Jim® Containers
2692-88	Slim Jim® Bottle and Can Recycling Top for Slim Jim® Containers
2703-88	Slim Jim® Paper Recycling Top for Slim Jim® Containers
9W16	Slim Jim® Confidential Document Container Lids for 3540, 3541 Containers
2673-60	Slim Jim® Swing Lid for Slim Jim® Containers
2674	Slim Jim® Hinge Lid for Slim Jim® Containers
3553	Slim Jim® Stainless Steel Dolly for Slim Jim® Containers

JUNE 14, 2019

3540-60 is an Accessory to:

No.	Description	Length	Height	Width
9T45	StockMate® ES Restocking Truck with Hinging Deck	63 in	19 1/4 in	19 1/4 in
9T50	StockMate® Restocking Truck, Standard Deck	63 in	33 5/8 in	19 1/8 in
9T79	Double Capacity Cleaning Cart	51 3/4 in	44 in	22 in
9T52	StockMate® Restocking Truck, Standard Deck with Cardboard Management System, Polyurethane Wheel and Casters	63 in	64 1/4 in	18 in
9T56	StockMate® Restocking Truck, Utility Deck, Olefin Wheels and Casters	63 in	64 1/4 in	18 in
9T72	High Capacity Cleaning Cart	49 3/4 in	38 3/8 in	21 3/4 in
9T73	Rubbermaid HYGEN™ Microfiber Cleaning Cart	48 1/4 in	44 in	22 in
9T74	Rubbermaid HYGEN™ Microfiber Cleaning Cart with Color-Coded Pails	48 1/4 in	44 in	22 in
9T75	High Security Cleaning Cart	48 1/4 in	53 1/2 in	22 in
9T76	Compact Folding Housekeeping Cart	51 3/4 in	44 in	22 in
9T77	Turndown Housekeeping Cart	38 1/4 in	44 in	22 in
9T78	High Security Housekeeping Cart	51 3/4 in	53 1/2 in	22 in
9W71	Mega BRUTE® Mobile Waste Collector - 3 Pack	52 1/2 in	42 1/2 in	27 1/2 in
9W73	Mega BRUTE® Mobile Waste Collector - 1 Pack	52 1/2 in	42 1/2 in	27 1/2 in
9T92	Triple Capacity Cleaning Cart	51 3/4 in	44 in	22 in
9T94	Deluxe Paneled Compact Housekeeping Cart	38 1/4 in	44 in	22 in
9T95	Deluxe Paneled Housekeeping Cart	51 3/4 in	53 1/2 in	22 in

Consumables/Replacement Parts for 3540-60

No.	Fits	Description
5009-88	3540-60	Linear Low Density Can Liners

Work Smarter.

Rubbermaid Commercial Products, LLC
3124 Valley Avenue, Winchester, VA 22601
www.rcpworksmarter.com

JUNE 14, 2019

3063 & 3063a

50 GALLON ROLL OUT WASTE CONTAINERS; AVAILABLE IN GRAY & BLUE

Model 1971962

Model FG9W2773BLUE

Rubbermaid Brute® Recycling Rollout Container 50 Gallon, Rubbermaid 1971962 & FG9W2773BLUE
Ideal for central collection, transporting and shipping recyclable waste with heavy duty construction and convenient features. Large capacity saves labor and reduces collection costs. Heavy-duty 8" wheels maneuver easily, even over steps or curbing and feature a rugged, molded-in axle retainer for strength. The attached hinged lid fits tightly and locks open for easy emptying. Tough durable construction provides long life. Rounded corners and smooth contours are easy to clean. This recycling container is blue imprinted with *We Recycle* to keep non recyclables out and avoid messy sorting. Contains Post Consumer Recycled Resin (PCR) exceeding EPA guidelines.

Product Specifications

- **WIDTH INCHES**23-2/5
- **DEPTH INCHES**28-1/2
- **HEIGHT INCHES**36-1/2
- **COLOR FINISH**Blue Or Gray
- **ASSEMBLY**Assembled
- **CONSTRUCTION**Plastic
- **MANUFACTURERS PART NUMBER**FG9W2773BLUE
- **MODEL**705622
- **TYPE**Brute Recycling Rollout w/Lid
- **WEIGHT LBS**27.1
- **CAPACITY GALLONS**50
- **BRAND**Rubbermaid® Commercial

**NOTE: THESE UNITS ARE AVAILABLE IN 65 GALLON; COLORS ARE GRAY & RED*

SOURCE: https://www.globalindustrial.com/searchResult?searchBox=&q=1971962

Commercial Dryer/ Air Mover

Compact, stackable three-speed air mover dries areas quickly.

Powerful airflow
Reduce drying time dramatically with this powerful three-speed air mover.

Reduce storage space
Convenient, stackable units free up valuable space in closets, storage areas and transport vehicles.

Ease of use
Optional wheeled hand cart for easy transportation and handling.

Key Benefits

- Quickly dry carpet, hard floors, fresh paint, concrete sealer and much more.
- This unit can be placed in three positions, which allows for optimal directional airflow.
- Designed to be both stackable and lightweight for improved ease of use and storage. Optional wheeled hand cart available (Part #9014821).

1150-13 10/16

©2016 The Tennant and Nobles logos and other marks designated with the symbol "®" are registered trademarks of Tennant Company, Inc., in the United States and/or other countries. The marks designated with "TM" are trademarks of Tennant Company that are not yet registered in the United States. All rights reserved.

JUNE 14, 2019

Tennant
701 North Lilac Drive
Minneapolis, MN 55422
USA

800.553.8033
763.540.1200
In Quebec: 800.361.9050

www.tennantco.com
info@tennantco.com

Commercial Dryer/ Air Mover

Features	Specifications*
Product Name	Commercial Dryer/Air Mover
Blower System	
Blower motor HP	0.6 hp / 522 Watt
Blower motor amps	4.35 amps at top speed
Blower motor switch	Rotary
Blower motor volts	120 V / 60 Hz
Blower motor speeds	(3) three speeds
Maximum air movement	1350 cfm (710 rpm / 1105 rpm / 1550 rpm)
Chassis and Body Construction	
Chassis construction	Blown polyethylene
Metal parts coating	Epoxy powder coated, acrylic paint or nickel/zinc plated, green Phenolic paint
Features	Stackable, three positions using kickstand, optional wheel hand cart (Part #9014821)
Dimensions/Weight	
Height	18.5 in / 47 cm
Width	15 in / 38.1 cm
Length	18 in / 45.7 cm
Weight	22.5 lb / 10.2 kg
Power Cord	
Length	18.5 ft / 5.6 m
Protection Grade	IP20
Sound Pressure level	69 dBA
Approval	UL
Warranty	See your sales representative or authorized distributor for complete warranty details.

*Specifications subject to change without notice

Note: All 120V models will come with a dual Tennant/Nobles decal

1150-13 10/16

©2016 The Tennant and Nobles logos and other marks designated with the symbol "®" are registered trademarks of Tennant Company, Inc., in the United States and/or other countries. The marks designated with "TM" are trademarks of Tennant Company that are not yet registered in the United States. All rights reserved.

JUNE 14, 2019

Tennant
701 North Lilac Drive
Minneapolis, MN 55422
USA

800.553.8033
763.540.1200
In Quebec: 800.361.9050

www.tennantco.com
info@tennantco.com

3072

55 GALLON CONTAINER WITH LID AND DOLLY

FOR USE IN CADAVER STORAGE

RUBBERMAID FG265500GRAY SPECS	
Height	33 Inches
Bottom Diameter	20 1/2 Inches
Top Diameter	26 1/2 Inches
Capacity	55 Gallons
Color	Gray
Lid Type	No Lid
Made in America	Yes
Material	Heavy Duty Plastic
NSF Listed	Yes
Shape	Round
Type	Trash Cans

SOURCE: https://www.webstaurantstore.com/rubbermaid-fg265500gray-brute-gray-55-gallon-trash-can/690FG2655GY.html

3079

Rubbermaid®
Commercial Products

WAVEBRAKE®

THE NEW GENERATION WAVEBRAKE®

UP TO 80% LESS SPLASH[1]

Patented WaveBrake® baffles result in less splashing while mopping and maneuvering, helping to create a safer environment for patrons and staff.

EASY TO EMPTY

A built-in drain eliminates the strain of lifting and bending when emptying mop buckets. Integrated handles help ensure a secure grip to lift and empty the mop bucket.

5-YEAR WRINGER GUARANTEE[2]

The side-press and down-press wringers are designed to last 5 years or 200,000 wringing cycles.

[1] Versus competitive 35Qt U.S. single compartment mop bucket and wringer, not including divider bucket and accessories. [2] Based on internal side-press testing.

JUNE 14, 2019

WAVEBRAKE® SIDE-PRESS BUCKET AND WRINGER

	DESCRIPTION	ITEM #	COLOR	CASE QTY
26-QUART	26-QT WAVEBRAKE® SIDE-PRESS BUCKET AND WRINGER	FG748000YEL	YELLOW	1
35-QUART	35-QT WAVEBRAKE® SIDE-PRESS BUCKET AND WRINGER	FG758088YEL	YELLOW	1
	35-QT WAVEBRAKE® SIDE-PRESS BUCKET AND WRINGER	FG758088BRN	BROWN	1
	35-QT WAVEBRAKE® SIDE-PRESS BUCKET AND WRINGER	FG758888BLUE	BLUE	1
	35-QT WAVEBRAKE® SIDE-PRESS BUCKET AND WRINGER	FG758888RED	RED	1
	35-QT WAVEBRAKE® SIDE-PRESS BUCKET AND WRINGER	FG758888GRN	GREEN	1
	35-QT WAVEBRAKE® SIDE-PRESS BUCKET AND WRINGER, EXECUTIVE SERIES	1863896	BLACK	1
	35-QT WAVEBRAKE® SIDE-PRESS BUCKET AND WRINGER WITH DRAIN	2031764	YELLOW	1
44-QUART	44-QT WAVEBRAKE® SIDE-PRESS BUCKET AND WRINGER WITH DRAIN	FG618688YEL	YELLOW	1

WAVEBRAKE® DOWN-PRESS BUCKET AND WRINGER

35-QUART	35-QT WAVEBRAKE® DOWN-PRESS BUCKET AND WRINGER	FG757788YEL	YELLOW	1
	35-QT WAVEBRAKE® DOWN-PRESS BUCKET AND WRINGER	FG757788BRN	BROWN	1
	35-QT WAVEBRAKE® DOWN-PRESS BUCKET AND WRINGER	FG757888BLUE	BLUE	1
	35-QT WAVEBRAKE® DOWN-PRESS BUCKET AND WRINGER	FG757888RED	RED	1
	35-QT WAVEBRAKE® DOWN-PRESS BUCKET AND WRINGER	FG757888GRN	GREEN	1
	35-QT WAVEBRAKE® DOWN-PRESS BUCKET AND WRINGER, EXECUTIVE SERIES	1863898	BLACK	1
44-QUART	44-QT WAVEBRAKE® DOWN-PRESS BUCKET AND WRINGER WITH DRAIN	FG757688YEL	YELLOW	1

WAVEBRAKE® INSTITUTIONAL BUCKET AND WRINGER

35-QUART	35-QT WAVEBRAKE® INSTITUTIONAL BUCKET AND SIEVE WRINGER	FG759088YEL	YELLOW	1
	35-QT WAVEBRAKE® INSTITUTIONAL BUCKET AND WRINGER (WITHOUT SPRING AND BAIL)	FG757900YEL	YELLOW	1

WAVEBRAKE® BUCKET AND CASTERS

26-QUART	26-QT WAVEBRAKE® BUCKET AND CASTERS	2064996	YELLOW	4
35-QUART	35-QT WAVEBRAKE® BUCKET AND CASTERS	2064914	YELLOW	4
	35-QT WAVEBRAKE® BUCKET AND CASTERS	2064906	BROWN	4
	35-QT WAVEBRAKE® BUCKET AND CASTERS	2064904	BLUE	4
	35-QT WAVEBRAKE® BUCKET AND CASTERS	2064910	RED	4
	35-QT WAVEBRAKE® BUCKET AND CASTERS	2064916	GREEN	4
	35-QT WAVEBRAKE® BUCKET AND CASTERS, EXECUTIVE SERIES	2064909	BLACK	4
	35-QT WAVEBRAKE® BUCKET AND CASTERS WITH DRAIN	2031763	YELLOW	1

WAVEBRAKE® WRINGER

SIDE-PRESS	WAVEBRAKE® SIDE-PRESS WRINGER	2064915	YELLOW	2
	WAVEBRAKE® SIDE-PRESS WRINGER	2064885	BROWN	2
	WAVEBRAKE® SIDE-PRESS WRINGER	2064888	BLUE	2
	WAVEBRAKE® SIDE-PRESS WRINGER	2064884	RED	2
	WAVEBRAKE® SIDE-PRESS WRINGER	2064912	GREEN	2
	WAVEBRAKE® SIDE-PRESS WRINGER, EXECUTIVE SERIES	2064960	BLACK	2
DOWN-PRESS	WAVEBRAKE® DOWN-PRESS WRINGER	2064959	YELLOW	2
	WAVEBRAKE® DOWN-PRESS WRINGER	2065003	BROWN	2
	WAVEBRAKE® DOWN-PRESS WRINGER	2064999	BLUE	2
	WAVEBRAKE® DOWN-PRESS WRINGER	2065001	RED	2
	WAVEBRAKE® DOWN-PRESS WRINGER	2064953	GREEN	2
	WAVEBRAKE® DOWN-PRESS WRINGER, EXECUTIVE SERIES	2064994	BLACK	2

WAVEBRAKE® DIRTY WATER BUCKET

35-QUART	35-QT WAVEBRAKE® DIRTY WATER BUCKET	2064907	RED	6
	35-QT WAVEBRAKE® DIRTY WATER BUCKET	2064908	YELLOW	6
	35-QT WAVEBRAKE® DIRTY WATER BUCKET	2064905	GRAY	6

©2018 Rubbermaid Commercial Products LLC
8900 Northpointe Executive Park Drive, Huntersville, NC 28078
To see our complete range of cleaning solutions visit our online catalog at **RubbermaidCommercial.com**

Rubbermaid® Commercial Products

WAVEBRAKE®

3088a

1 Gallon Covidien Sharps Container

Disposable container designed for the collection of sharps waste. Sliding lid allows easy disposal. Can be wall mounted or used on countertop. This product is available as single containers or as cases of 32 containers.

Dimensions: 7"x10.25"x6"
Brand: Covidien
Count: 1 Container
Capacity: 1 Gallon
Opening Type: Sliding
Lid: Opaque White
Features: Best Sellers

SKU# **4801**

SOURCE: https://store.stericycle.com/1-gallon-covidien-sharps-container/4801-p

JUNE 14, 2019

3088b

5 QT SHARPS CONTAINER WITH FLIP TOP & SECURITY BASKET FOR WALL MOUNT

WIRE BASKET

Safe, disposable container for needles, syringes, lancets, razors and sharp objects.

- Recommended for warehouses, medical facilities, schools and rest areas.
- Lid automatically closes when full.
- Fits Wall Mount Cabinet and Wire Basket.
- When full, properly dispose of container. Not for disposal in landfills.

SOLD IN CARTON QUANTITIES

MODEL NO.	SIZE	DESCRIPTION	QTY./ CTN.	PRICE PER CARTON	
				1	2+
S-15308	5-Quart	Container	5	$42	$37

Secure 5-Quart Container in sturdy lockable metal wire basket.

- Space saver; frees up counter space.
- Heavy-duty metal wire construction.
- Includes key.
- Sharps Containers sold separately.

SOLD IN CARTON QUANTITIES

MODEL NO.	SIZE	DESCRIPTION	QTY./ CTN.	PRICE PER CARTON	
				1	2+
S-16089	5-Quart	Wire Basket	1	$37	$33

SOURCE: https://www.uline.com/BL_6712/Sharps-Containers

Generated 02/07/2019

Stainless Steel Glove Dispensers
HOLDER, GLOVE-BOX, SS, QUAD

- Stainless steel glove box holders are wall mountable, horizontal or vertical
- Available in different sizes
- Direct item, non-returnable
- Please note, item MDS193095V can only be mounted vertically

Packaging	**4 Each / Case**
Manuf / Supplier	**Medline**
Manuf / Supplier #	**MDS194095B**

SKU **MDS194095B**

Safety Data Sheet Documents

No SDS content is available for this product.

Specifications

DISPENSER TYPE	Glove
HPIS CODE	450_50_0_0
HOLDING QTY	Quad
LATEX FREE	Yes
MATERIAL	Stainless Steel
UNSPSC	41103406

Unit of Measure	Conversion	Net/Gross Weight (lbs)	Volume (cubic ft)	Shipping Dimensions (inch) L x W x H	GTIN
Each **(EA)**	1.0 Each	0.0 / 3.5	0.331	0.0 x 0.0 x 0.0	10884389108154
Case (CS)	**4.0 Each**	**0.0 / 14.0**	**1.324**	**26.0 x 11.0 x 8.0**	**40884389108155**

HCPCS Information

HCPCS Code: NO CODE - PRODUCT DOES NOT MEET HCPCS SPECIFICATIONS

HCPCS Disclaimer: HCPCS codes and Home Health Consolidated Billing codes provided by Medline are intended as general guidelines only. Medline does not guarantee coverage or reimbursement of any products. You must address all coverage and reimbursement issues (including the correctness and accuracy of codes) with your individual payers. It is your responsibility to ensure the accuracy and appropriateness of each claim you submit, in accordance with all applicable payer requirements.

Bradley

Accessories

Satin Stainless Accessories

- ☑ Satin Finish Stainless Steel
- ☑ Surface-Mounted
- ☑ Vandal-Resistant Escutcheons

Product Materials

UNITS: No. 4 satin finish stainless steel.

ESCUTCHEONS: 2"W x 2"H, where applicable, unless otherwise indicated.

Installation

Verify all rough-in dimensions prior to installation. Secure mounting bracket to wall with screws (included) at holes provided. With escutcheon set screw on the bottom, align top end of escutcheon plate interior to top of wall bracket. Pivot escutcheon plate(s) down in position and tighten concealed set screw to lock unit in place.

Guide Specification

Surface-mounted accessory shall be fabricated of heavy gauge No. 4 satin finish stainless steel.

☐ **9014** ***Bradex***®
Soap Dish with Drain Holes

☐ **9014-63**
Soap Dish without Drain Holes, 4¼"W x 4"D

☐ **9014-US**
Domestic

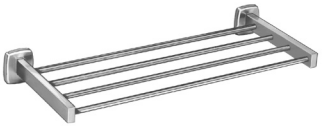

☐ **9104**
8" Deep Towel Shelf
☐ 18"W ☐ 24"W

☐ **9054**
¾" Square Towel Bar
☐ 18"W ***Bradex***®
☐ 24"W ***Bradex***®
☐ 30"W

☐ **9054-1200US**
12"W Domestic

☐ **9054-1800US**
18"W Domestic

☐ **9054-2400US**
24"W Domestic

☐ **9054-3000US**
30"W Domestic

☐ **9065**
¾" Round Towel Bar, projects 3"
☐ 18"W ***Bradex***®
☐ 24"W ***Bradex***®
☐ 30"W

☐ **9065-1800US**
18"W Domestic

☐ **9044** ***Bradex***®
Tumbler and Toothbrush Holder
4¼"W x 4"D

☐ **9044-US**
Domestic

☐ **9104-90**
8" Deep Towel Shelf with Towel Bar
☐ 18"W ☐ 24"W

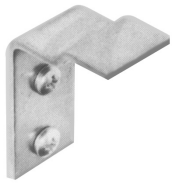

☐ **9111**
Clothes Hook, 1"W x 2¼"H x 1½"D

Washroom Accessories
Document No. 8905

Orders composed of products indicated as ***Bradex***® will be available to ship in three days after receipt of order at the factory. There is no pricing penalty for this service from Bradley.

Always consult local and national codes for proper installation guidelines. Conformity and compliance to local and national codes is the responsibility of the installer.

© 2013 Bradley
P.O. Box 309, Menomonee Falls, WI 53052-0309

This information is subject to change without notice. 2/11/2013

2019

Distributed by
www.AmeraProducts.com
Phone: (800) 608-6568
Fax: (409) 840-5545
info@ameraproducts.com

3124

Wire Garment Rack

Enlarge

Maximize space with this closet on wheels in your store or office.

- Two 48" shelves hold boxes, hats, shoes and much more.
- Hang bar holds up to 60 jackets.
- 5" locking poly swivel casters.

MODEL NO.	DESCRIPTION	HEIGHT	LENGTH	CAPACITY	WT. (LBS.)	PRICE EACH		ADD TO CART
						1	5+	
H-7896	Wire Garment Rack	69"	48"	150 lbs.	50	$190	$180	1 ADD

DIMENSIONS:

- Height in chart includes casters.
- Posts (Single Piece Construction): 1" Diameter
- Shelf Thickness: 1 1/4"

MATERIAL:

- Chrome-Plated carbon steel.
- Rust resistant, not rust proof.

TEMPERATURE:

- -20 to 120 F

CAPACITY:

- Overall: 1,000 lbs
- Hang Bar: 75 lbs
- Each Shelf: 800 lbs evenly distributed

CASTERS: (Sold Separately)

- Dimensions: 5 x 1 1/4"
- Add 5 3/4" to the height of the unit.
- Capacity: 1,000 lbs per kit (250 lbs per caster)
- NSF Certified (National Sanitary Foundation)

SOURCE: https://www.uline.com/Product/Detail/H-7896/Clothing-Racks-and-Accessories/Wire-Garment-Rack

3125

8 COAT HOOK RACK EXAMPLE

Product Overview

- Description

  Bring order to the entryway with this wall-mounted coat rack! Crafted of manufactured wood in a sleek gray finish, this coat rack features a clean-lined rectangular backplate complete with decorative screw caps. Made from die-cast zinc in a complementary black finish, eight double-hooks accommodate all your jackets, hats, backpacks, handbags and more with ease. Measuring 4.37" H x 45" W x 2.98" D overall, this rack arrives ready to hang right out of the box with wall-mounting hardware included.

Features

- Use this casual hook rack to add stylish organization to your foyer, bedrooms, bathrooms, hallways, and more
- Add a touch of sophistication with this warm gray rack with classic flat black hooks
- This durable medium density fiberboard (MDF) rack with die-cast zinc hooks

Product Details

- Material: Manufactured Wood
- Number of Hooks: 8

SOURCE: **https://www.walmart.com/ip/August-Grove-Esson-Industrial-Craftsman-Wall-Mounted-Coat-Rack/809349883**

3131

AMERICAN SPECIALTIES, INC.
441 Saw Mill River Road, Yonkers, NY 10701 (914) 476-9000
www.americanspecialties.com

MODEL No:	7311-20 7311-24
ISSUED:	8-03
REVISED:	1-06

SURFACE MOUNTED TOWEL SHELF WITH DRYING ROD

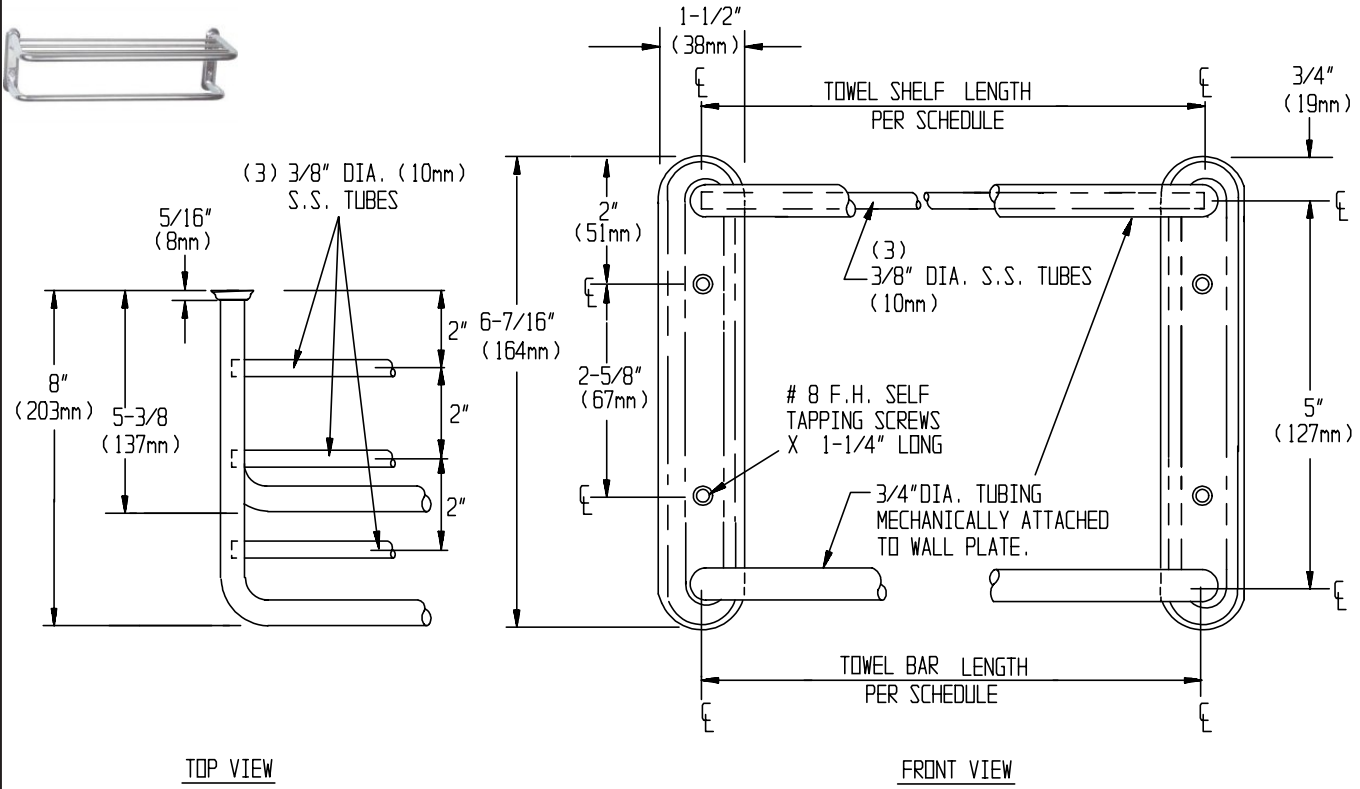

SPECIFICATION

Surface Mounted Towel Shelf with Drying Rod shall be fabricated of stainless steel alloy 18-8, type 304. Wall mounting plates shall be formed for strength with dimpled mounting holes. Cross tubes shall be 3/8" diameter (Ø10mm) and shall be held in receiver holes in continuous 3/4" diameter (Ø19mm) formed mounting frame mechanically retained in wall plates. Drying rod below shelf shall be 3/4" diameter (Ø19mm) formed tube mechanically retained in wall plates. Surface finish of entire unit shall be bright. Length shall be as chosen from schedule and indicated by code suffix.

Surface Mounted Towel Shelf with Drying Rod shall be Model № 7311-20 or № 7311-24 of American Specialties, Inc., 441 Saw Mill River Road, Yonkers, New York 10701-4913

INSTALLATION

Surface mount unit on wall using № 8 flat or oval head self tapping screws (by others) through countersunk holes provided in mounting plate into suitable prepared mountings (by others) or other suitable mounting hardware (by others) to suit wall conditions. For compliance with ICC/ANSI A-117.1-2003 and ADA Accessibility Guidelines install unit with top of shelf 48" (1219mm) maximum above finished floor (MAX AFF) if clear floor forward reach or if clear floor side reach access only is provided or 46" (1168mm) MAX AFF if side reach access over an obstruction (e.g. vanity) with reach depth greater than 10" (254mm) and less than 25" (635mm) is only provided or 44" (1118mm) MAX AFF if forward reach over an obstruction (e.g. commode) with reach depth greater than 20" (508mm) and less than 25" (635mm) is only provided. For general utility install 68" (1727mm) MAX AFF.

LENGTH	MODEL №
20″ (508mm)	7311-20
24″ (610mm)	7311-24

Will Require Strong Wall Support:
this product is proposed for the security office where they can hang their protective gear over the rods. Will need to verify with owner if this is an acceptable solution.

THIS MANUFACTURER RESERVES THE RIGHT TO MAKE CHANGES IN DESIGN OR DIMENSIONS WITHOUT FORMAL NOTICE

AMERICAN SPECIALTIES, INC.
441 Saw Mill River Road, Yonkers, NY 10701 (914) 476-9000

MODEL No:	0690
ISSUED:	1-87
REVISED:	9-04

SURFACE MOUNTED SHELF

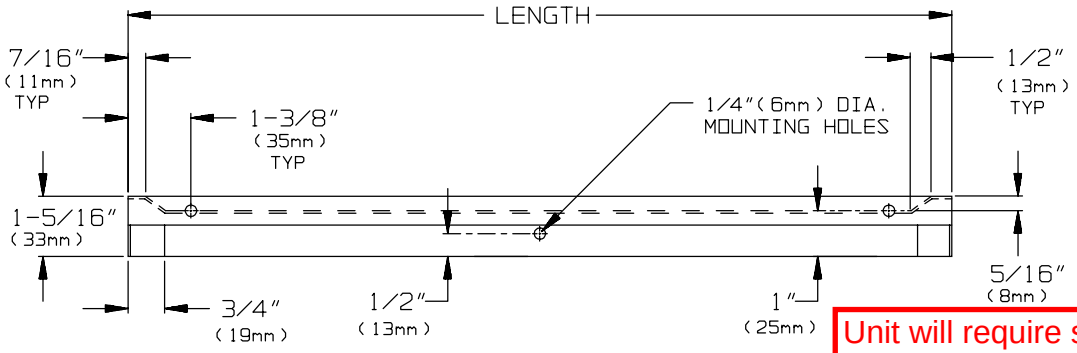

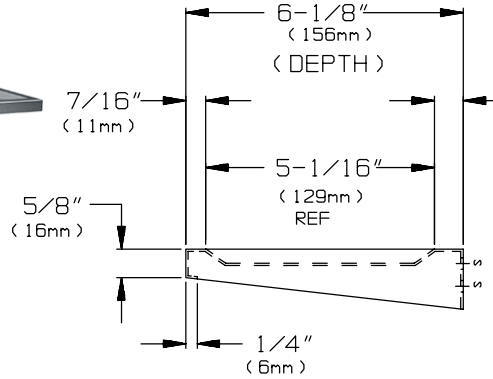

Unit will require strong wall backing.
This shelf is to hold cell phones and other items/ raised lip required,
there will be 2 double robe hooks placed under the shelf for lab coats.

SPECIFICATION

Surface Mounted Shelf shall be fabricated of alloy 18-8 stainless steel, type 304 and shall be 18 gauge. Shelf shall have a 5/8″ (16mm) lip on front with an extra return for rigidity and safety. Sides of shelf shall be closed and tapered from front to rear. Rear of shelf shall have a turned down leg with mounting holes. Shelf shall have a 3/8″ (10mm) depression in top surface inside perimeter rim. All edges shall be de-burred. All exposed surfaces shall be № 4 satin finish and shall be protected during shipment with a PVC film easily removable after installation.

Surface Mounted Shelf shall be Model № 0690-xxxx as manufactured by American Specialties, Inc., 441 Saw Mill River Road, Yonkers, New York 10701-4913

Model No.	LENGTH	DEPTH	QUANTIY REQUIRED
0690-0618	18″ (457mm)	6″ (152mm)	
0690-0624	24″ (610mm)	6″ (152mm)	

INSTALLATION

Unit is surface mounted on wall or partition using №10 self tapping screws (by others) through (3) holes provided in shelf back return. For compliance with ADA Accessibility Guidelines, unit should be installed so that shelf top is between 48" (1219mm) maximum above finished floor (AFF) and 32" (813mm) minimum AFF; for most common utility, typical is 42" (1067mm) AFF or 18" (457mm) above wash basin.

OPERATION

Shelf is stable and stationary after proper and secure mounting to adequate wall reinforcement or stud structure. Shelf is suitable for toiletry material storage.

THIS MANUFACTURER RESERVES THE RIGHT TO MAKE CHANGES IN DESIGN OR DIMENSIONS WITHOUT FORMAL NOTICE

3194

FRIGIDAIRE

Microwaves

FFCE1638TD / FFCE1638LS

Countertop

Product Dimensions

Height	12-7/8"
Width	21-3/4"
Depth	18-1/2"

More Easy-To-Use Features

Ready-Select® Controls
Easily select options with the touch of a button.

Auto One-Touch Options
Our microwaves feature easy-to-use one-touch buttons so you can cook beverages, baked potatoes, popcorn, fresh veggies or even add thirty seconds with the touch of a button.

Effortless™ Defrost
Makes it easy to defrost almost anything, quickly and evenly.

Effortless™ Reheat
Reheat almost anything at the touch of a button.

Multiple-Stage Cooking Option
Our Multi-Stage Cooking option allows you to program power levels and cooking times in advance, so you can program it to defrost, cook and keep a meal warm all at once.

10 Cooking Power Levels
Provides the versatility needed to prepare everything from frozen pizza to pot roast quickly and easily.

Control Lock Option

Electronic Clock / Timer
Helps you keep track of cook times.

Attractive Stainless Steel Exterior

Interior Light
Illuminates the contents of the microwave for increased visibility.

Large Glass Turntable
Even large items fit on our large glass turntable.

Available in:

Black Stainless (D)

Stainless (S)

Signature Features

Sensor One-Touch Options
Microwave automatically adjusts power levels and cooking times to cook a variety of items, effortlessly.

Keep Warm Setting
Keep food warm until everything — and everyone — is ready.

Melt & Soften
Use the microwave to quickly melt or soften butter or cheeses for your recipes.

Easy-Set™ Start
Quickly start cooking – one to six minutes – with just one touch.

FRIGIDAIRE

Microwaves

FFCE1638TD / FFCE1638LS **Countertop**

Features	
Control / Timing System	Ready-Select®
Exterior Door Finish	Blck Stainless Steel (D), Stainless Steel (S)
Handle Design	Push Button
Microwave Features	
Microwave Capacity (Cu. Ft.)	1.6
Watts (IEC-705 Test Procedure)	1,100
Interior Light	Yes
Interior Color	White
Turntable Diameter	14-1/4"
Turntable On / Off	
Control Lock	Yes
Clock	Yes
Touch Pad Buttons	23
Power Levels	10
Accessory Metal Rack	
Microwave Control Options	
Easy-Set™ Start	Yes
Popcorn Button	Yes
Chicken Nugget Button	
Baked Potato Button	Yes
Sensor Reheat Button	Yes
Snack Button	
Beverage	Yes
Melt & Soften Options	4 / 4
Auto Reheat Options	
Snack Menu Options	
Auto Cook Options	
Auto Defrost Options	Yes
Keep Warm	Yes
Add-30-Seconds	Yes
Sensor Cooking Options	7
Vegetable Cook Sensor	Yes
Delay Start	
User Preferences	
Power Ratings	
Frequency (Mhz)	2,450
Watts @ 120 Volts	1,100
Amps @ 120 Volts	13
Specifications	
Oven Interior Height	10-5/16"
Oven Interior Width	17-1/4"
Oven Interior Depth	15-3/8"
Power Supply Connection Location	Rear
Voltage Rating	120V / 60Hz / 15A
Minimum Circuit Required (Amps)	15
Shipping Weight (Approx.)	47 Lbs.

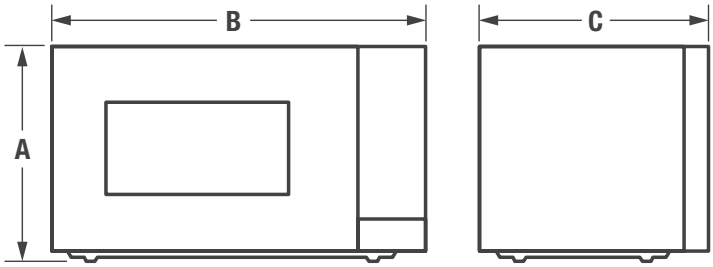

NOTE: For planning purposes only. Always consult local and national electric codes. Refer to Product Installation Guide for detailed installation instructions on the web at frigidaire.com.

Product Dimensions[1]	
A - Height	12-7/8"
B - Width	21-3/4"
C - Depth	18-1/2"

[1]*A minimum clearance of 3 inches is required above microwave oven and between microwave oven and adjacent walls.*

*Accessories information available on the web at **frigidaire.com***

© 2017 Electrolux Home Products, Inc.

Specifications subject to change.

3202

PARTS BIN-MOBILE

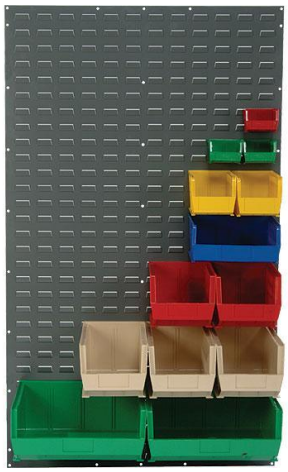

PLASTIC STACKABLE BINS

MODEL NO.	OUTSIDE DIM. L x W x H	INSIDE DIM. L x W x H	QTY./ CTN.	LBS./ CTN.	PRICE PER BIN		
					1 CTN.	3 CTNS.	6+ CTNS.
S-12413	5 1/2 x 4 x 3"	4 7/8 x 3 9/16 x 2 5/8"	24	5	$1.15	$1.10	$1.05
S-12414	7 1/2 x 4 x 3"	6 13/16 x 3 1/2 x 2 5/8"	24	5	1.55	1.50	1.45
S-20581	9 1/2 x 6 x 5"	8 1/2 x 5 1/8 x 4 1/2"	12	7	4.20	4.05	3.90
S-13536	11 x 4 x 4"	10 3/8 x 3 7/16 x 3 1/2"	12	7	2.90	2.80	2.70
S-12415	11 x 5 1/2 x 5"	10 1/4 x 4 5/8 x 4 1/2"	12	7	$3.69 any quantity		
S-12416	11 x 8 x 7"	10 1/4 x 6 7/8 x 6 3/8"	6	7	7.90	7.55	7.25
S-12417	11 x 11 x 5"	10 1/4 x 10 x 4 1/2"	6	6	7.35	7.00	6.65
S-13537	11 x 16 1/2 x 5"	10 5/16 x 15 1/8 x 4 3/8"	6	10	11.00	10.45	9.90
S-12418	15 x 5 1/2 x 5"	14 1/8 x 4 1/2 x 4 1/2"	12	10	6.55	6.30	6.05
S-12419	15 x 8 x 7"	13 3/4 x 6 7/8 x 6 3/8"	12	16	7.35	7.00	6.65
S-12420	15 x 16 1/2 x 7"	13 13/16 x 14 15/16 x 6 5/16"	6	15	11.00	10.45	9.90
S-14454	18 x 8 x 9"	17 1/8 x 6 3/4 x 8 1/4"	6	14	17.10	16.25	15.45
S-12421	18 x 11 x 10"	16 7/8 x 9 1/4 x 9 3/8"	4	10	17.55	16.75	15.90
S-12422	18 x 16 1/2 x 11"	16 7/8 x 15 x 10 3/8"	3	13	22.65	21.65	20.60

SOURCE: https://www.uline.com/Product/Detail/H-3888/Bin-Organizers/Panel-Mobile-Bin-Organizer-36-x-71

SOURCE FOR BINS, DIVIDERS & LIDS: https://www.uline.com/BL_305/Uline-Plastic-Stackable-Bins

3215

KEURIG® K-CUP® Single Cup Brewing System

NOTE: THIS WILL BE A PLUMBED UNIT

COMMERCIAL SERIES

K150

This feature-rich brewer is perfect for small to medium-sized environments

- Color Touchscreen Interface for easy operation
- Large 90 oz. Water Reservoir or direct line plumbed for continuous use
- Five programmable brew sizes to meet the needs of multiple users

Brew Sizes	4 oz., 6 oz., 8 oz., 10 oz., 12 oz.
Water Source	Pour Over or Plumbed *(with Direct Plumb Kit Accessory)*
Cold Water Tank	90 oz.
Drainable Internal Water Tank	Yes
Interface	LCD Full Color Touchscreen
– Multiple Languages	English/French/Spanish
– Programmable Clock	Yes
– Program "On/Off"	Yes
– Program "Auto Off"	Yes
– Customize Brew Temperature	Yes
– Customize Brew Size Options	Yes
– Program Contact Screen Info	Yes
Brewer Weight (Empty)	18 lbs
UL Listed	cULus Commercial & Household
NSF Certification	NSF/ANSI 4 Food Equipment
Electrical	120 VAC, 60 Hz, Single Phase, 15A
Power	1400W
Plug Type	2-Wire Plus Ground
Product Number	20150
UPC Number	649645201504

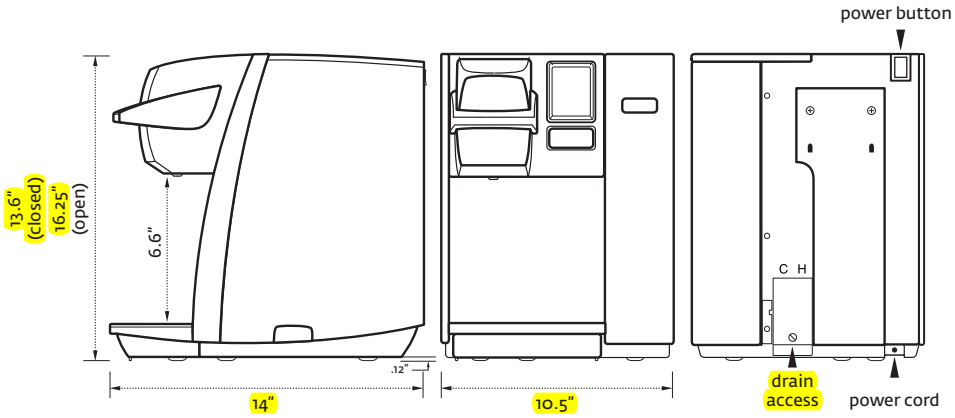

NSF

KEURIG COMMERCIAL GRADE Engineered for Continuous Use

Reorder #97047MS Rev A
© 2013 Keurig, Incorporated.
www.keurig.com

JUNE 14, 2019

3216

AXIOM-15-3 (3 Lower Warmers)

16.8" x 22.1" x 16.3"
(42.7cm x 56.1cm x 41.4cm)

- Adjusts automatically to varying water pressure
- Automatic warmer shut-off
- For high lime areas, BrewLOGIC® technology calculates flow rate and adjusts brew time to maintain consistent pot levels
- Electronic diagnostics and built-in tank drain make service easier
- Large 200oz. (5.9L) tank provides back-to-back brewing capacity
- Ensure coffee quality with programming for brew level, cold brew lock- out and tank temperature, set easily from the front of the machine
- Coffee extraction controlled with programmable pre-infusion, pulse brew and digital temperature precision
- Energy-saver mode reduces tank temperature during idle periods
- Hot water faucet
- SplashGard® funnel deflects hot liquids away from the hand

Agency:

Specifications

Product #: 38700.0002
Water Access: Plumbed
Finish: Stainless
Funnel: Black Plastic
Faucet: Upper
Warmers: Three Lower

Additional Features

DBC

Electrical & Capacity

Volts	Amps	Watts	Cord Attached	Plug Type	8oz cups/hr 236ml cups/hr	Input H²O Temp.	Phase	# Wires plus Ground	Hertz
120	15	1800	Yes	NEMA 5-15P	67	60°F (15.5°C)	1	2	60

Plumbing Requirements

PSI	kPa	Fitting Supplied	Water Flow Required (GPM)
20-90	138-621	1/4" Male Flare Fitting	-

CAD Drawings

2D	Revit	KLC
●		

BUNN
JUNE 14, 2019

BUNN® reserves the right to change specifications and product design without notice. Such revisions do not entitle the buyer to corresponding changes, improvements, additions or replacements for previously purchased equipment.
For most current specifications and other info visit bunn.com.

Created on:
02/06/2019

3216

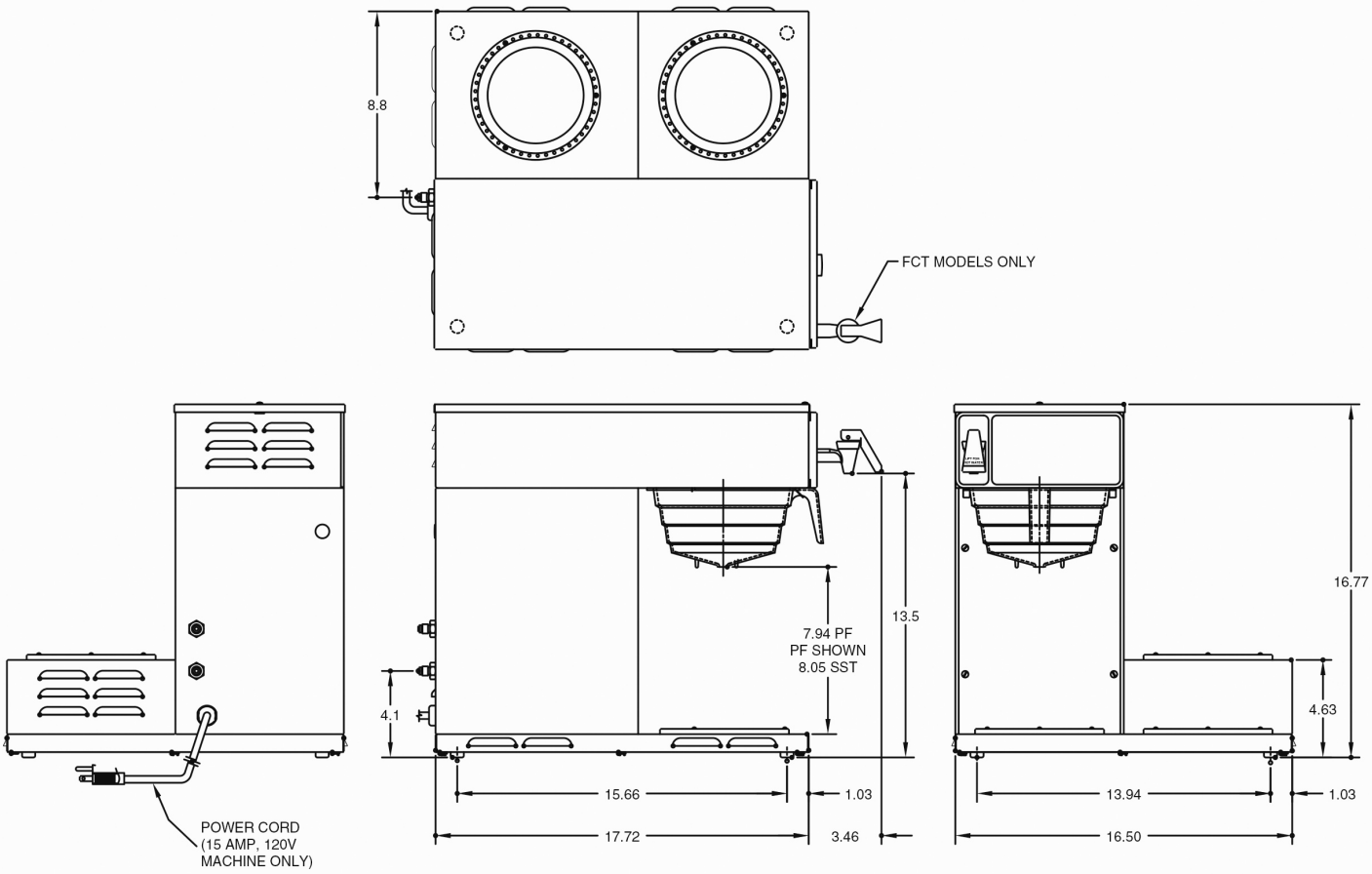

	Unit			Shipping				
	Width	Height	Depth	Width	Height	Depth	Weight	Volume
English	16.3 in.	16.8 in.	22.1 in.	19.9 in.	22.4 in.	25.8 in.	36.750 lbs	5.939 ft³
Metric	41.4 cm	42.7 cm	56.1 cm	50.5 cm	56.9 cm	65.5 cm	16.670 kgs	0.168 m³

JUNE 14, 2019

BUNN® reserves the right to change specifications and product design without notice. Such revisions do not entitle the buyer to corresponding changes, improvements, additions or replacements for previously purchased equipment. For most current specifications and other info visit bunn.com.

Created on: 02/06/2019

3216a

VLPF (2 Lower Warmers)

17.4" x 13.1" x 23.5"
(44.2cm x 33.3cm x 59.7cm)

- Black finish
- Internal components are constructed from stainless steel
- SplashGard® funnel deflects hot liquids away from the hand
- Two individually controlled warmers

Agency:

Specifications

Product #: 07400.0005
Warmers: Two Lower
Water Access: Plumbed
Finish: Stainless
Funnel: Black Plastic
Faucet: Upper

Additional Features

Low Profile

Electrical & Capacity

Volts	Amps	Watts	Cord Attached	Plug Type	8oz cups/hr 236ml cups/hr	Input H²O Temp.	Phase	# Wires plus Ground	Hertz
120	13.3	1600	Yes	NEMA 5-15P	61	60°F (15.5°C)	1	2	60

Plumbing Requirements

PSI	kPa	Fitting Supplied	Water Flow Required (GPM)
20-90	138-621	1/4" Male Flare Fitting	-

CAD Drawings

2D	Revit	KLC
●		

BUNN® reserves the right to change specifications and product design without notice. Such revisions do not entitle the buyer to corresponding changes, improvements, additions or replacements for previously purchased equipment. For most current specifications and other info visit bunn.com.

Created on: 02/06/2019

3216a

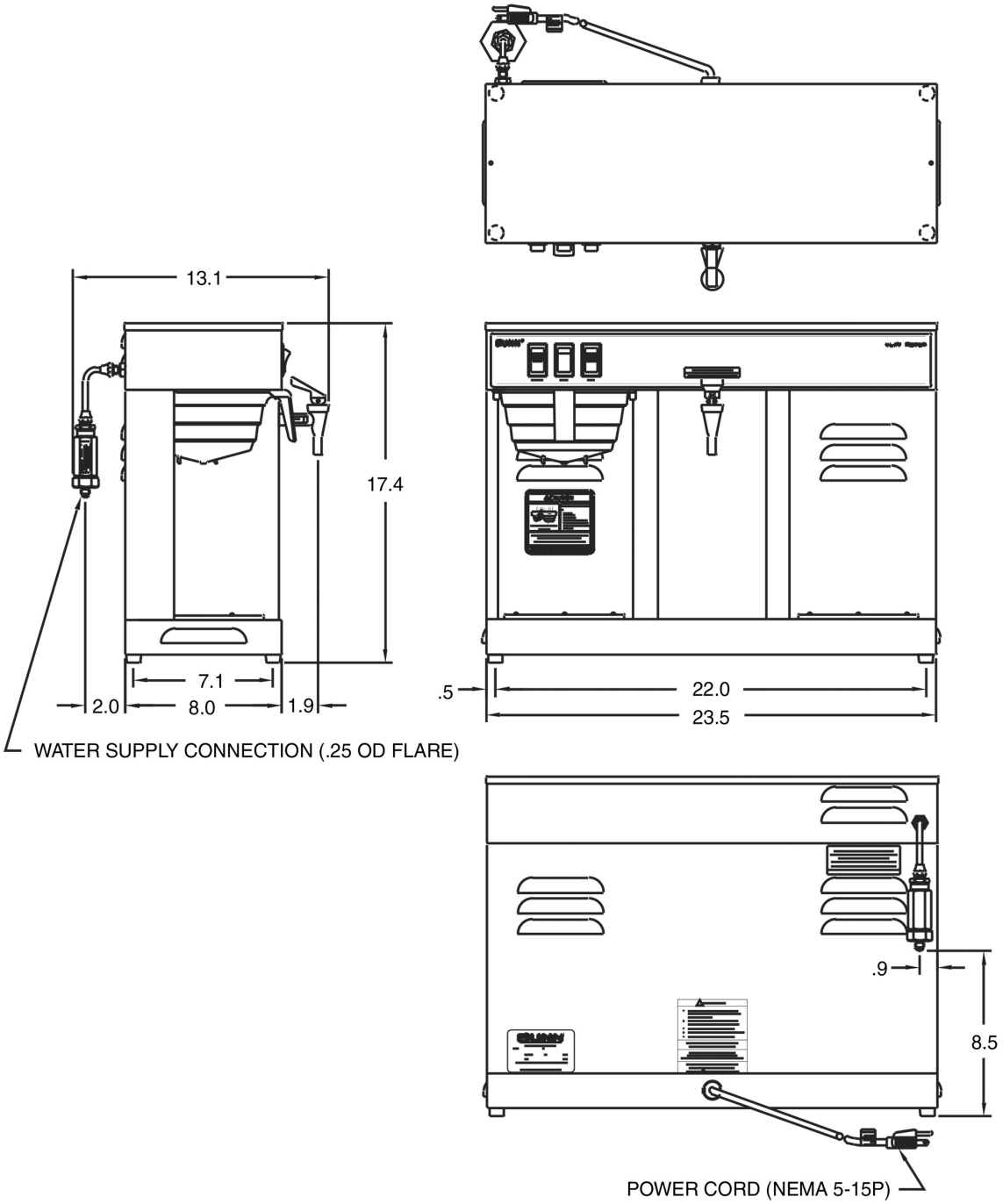

	Unit			Shipping				
	Width	**Height**	**Depth**	**Width**	**Height**	**Depth**	**Weight**	**Volume**
English	23.5 in.	17.4 in.	13.1 in.	22.0 in.	25.5 in.	14.5 in.	27.950 lbs	4.707 ft³
Metric	59.7 cm	44.2 cm	33.3 cm	55.9 cm	64.8 cm	36.8 cm	12.678 kgs	0.133 m³

BUNN® reserves the right to change specifications and product design without notice. Such revisions do not entitle the buyer to corresponding changes, improvements, additions or replacements for previously purchased equipment. For most current specifications and other info visit bunn.com.

JUNE 14, 2019

Created on: 02/06/2019

3216e
Provided by 3rd party vendor/IMPERIAL

THERMOPRO™ G3 DIGITAL COFFEE BREWING SYSTEMS

MODELS: TP15S SINGLE, TP15T TWIN, THERMOPRO & MILANO SERVER

3216e

ITEM NO

CNH/OSU TAHLEOUAH

PROJECT

DATE

Easy Gourmet Brewing.

- G3 Digital Control Module provides precise control over all aspects of brewing in an intuitive, easy-to-operate system
- Pre-Set Global Recipes at the touch of a single button – no complex equipment required
- Stainless steel ThermoPRO™ vacuum-sealed servers keep coffee fresh, hot and flavorful
- Single unit is field selectable for One, Two or Three Batch brewing
- Enhanced Recovery Circuitry – boosts performance on 220V/single phase models
- All features Standard from Curtis… extra from others

G3 GENERATION THREE

JUNE 14, 2019

3216e

TP15T Twin

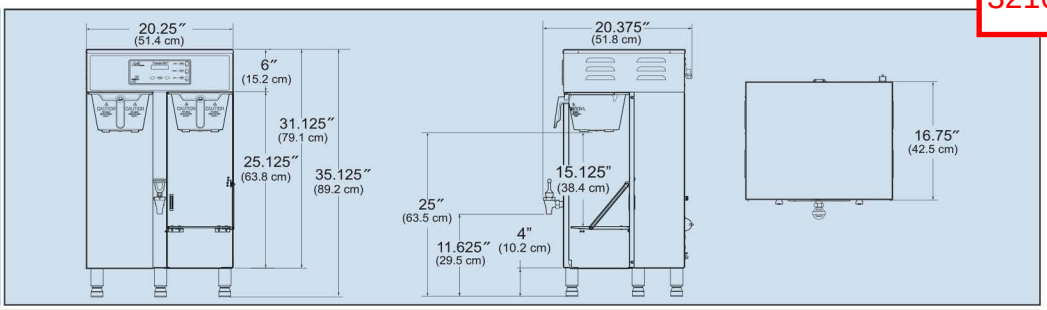

TP15S Single

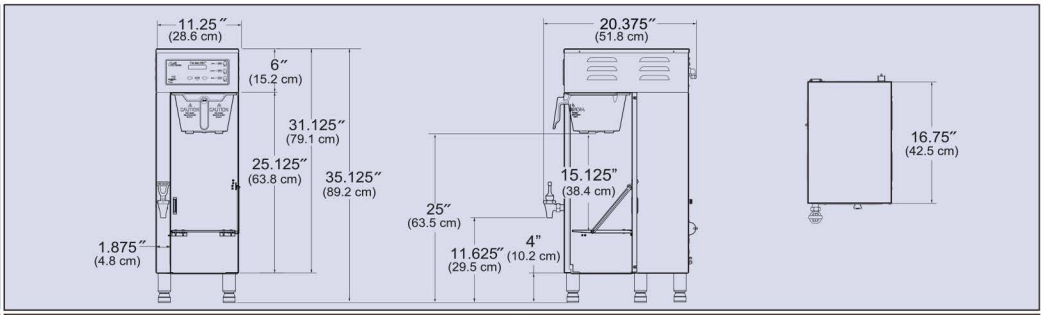

TXSG15 ThermoPro Server

TLCG15 Milano Server

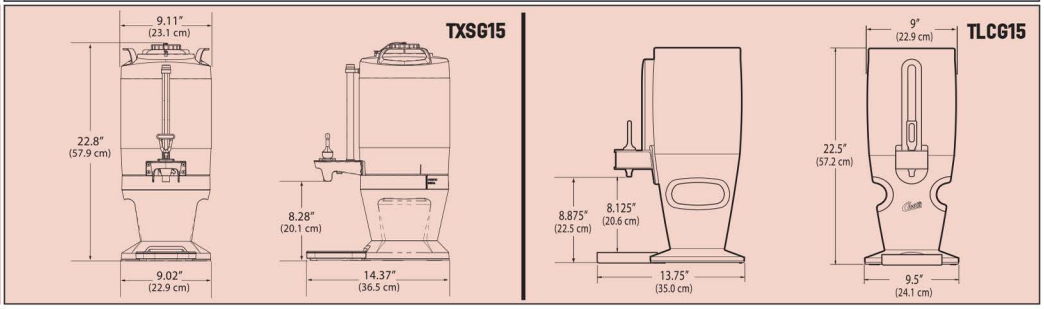

WS1 Wire Stand

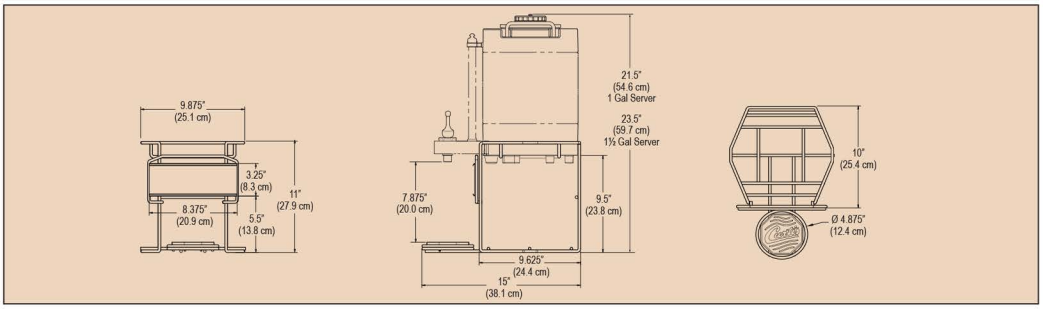

Specifications	Batch Brewing Selections	Finished Brewing Capacity	Dimensions (H x W x D)	Voltage	Power Requirements	Water Source	Shipping Wt (lbs. w/o server	Cube (cu ft.)
TP15T Twin (includes 2 servers)	6	3 Gal. (1.5 per side)	35.125″ x 20.25″ x 16.75″	220V/Single Phase* 3 Wire Plus Ground	5100W/7600W***	3/8″ Flare	68	14.3
TP15S Single (server included)	3	1.5 Gal.	35.125″ x 11.25″ x 16.75″	220V/Single Phase* 3 Wire Plus Ground	4300W	3/8″ Flare	55	9.1
TXSG15 Server (includes base)	N/A	1.5 Gal.	22.8″ x 9.02″ x 14.37″	N/A	N/A	N/A	15	3.7
TLCG15 Server (includes base)	N/A	1.5 Gal.	22.5″ 9.5″ x 13.75″	N/A	N/A	N/A	14	3.7
WS1 Wire Stand	N/A	N/A	11″ x 9.875″ x 10″	N/A	N/A	N/A	4	1.09

*Optional 220VAC/3 Phase – Specify 3 Wire or 4 Wire Plus Ground. ** Optional Dual Voltage 120/220VAC
*** Field convertible to higher wattage. Export Voltage Available – contact factory.

Field Changeable Enhanced Recovery Circuitry

ThermoPro twin* units ship standard with a robust 5000 watts of recovery power. Should you have a higher rated circuit at the installation, a single connection change*** boosts the ThermoPro to a powerful 7500 watts providing enhanced recovery and brewing speed.

NOTE: *220VAC/Single Phase Models Only
*** Should be connected only by a qualified installation technician.

WARNING - These products can expose you to chemicals including Acrylamide and Bisphenol A (BPA), which are known to the State of California to cause cancer and birth defects or other reproductive harm. For more information visit www.P65Warnings.ca.gov

WILBUR CURTIS COMPANY, INC.
6913 Acco Street, Montebello, CA 90640-5403
Telephone: 800-421-6150 · 323-837-2300
Fax: 323-837-2406
www.wilburcurtis.com

JUNE 14, 2019

AUG/2018 F-3323 revJ

3217

DIGITAL COFFEE GRINDER

MODEL: ILGD

ILGD

3217

ITEM NO

CNH/OSU TAHLEQUAH

PROJECT

DATE

Advanced Digital System™ – A Curtis Exclusive

ADS™ represents the future of coffee equipment technology, giving operators unparalleled control, consistency, quality and ease of use.

ADS™ Features:

- **Digital Superiority –** Electronic solid state technology centralizes controls on the front Touchkey Panel for easy programming and precise performance.
- **Touchkey Control Panels –** Provides up to 10 times longer working life than mechanical switches and a smooth surface for easier cleaning and maintenance.
- **Fully Programmable Grind Cycle –** Digital LED readout shows grind cycle length clearly. Set grind cycle from 1 to 99 seconds
- **Self-Diagnostic –** ADS™ technology expedites service.
- **One Touch Grind-to-Brew –** When combined with the GEMGT or ThermoPro™, digital controls automatically select brewing cycle to correspond with selected grind quantity for error-proof brewing every time.

From the first name in coffee brewing comes the first coffee grinders of the 21st century! The Digital InterLock Series from Curtis, with ADS™ (Advanced Digital System) technology. These coffee grinders enable users to link grinder to brewer for the perfect brew, every time.

Specially designed and styled for use with Gemini® and ThermoPro™ Series brewers with 3-Batch option, these advanced grinders interlock for complimentary systems, making fresh grind/fresh brew programs a snap. And Dual Hopper capacity gives you the flexibility to fresh grind from two separate selections, making your specialty or decaf coffee as fresh as your house blend.

The Easiest Interface Ever

Digital Controls

LED Display — Indicates grind cycle length for absolute accuracy of grind. Dial-in perfect grind length, eliminate guessing.

Grind Select Buttons — Select from small, medium, large and the InterLockE system automatically locks in grind time on the brewer (3-batch only option). Each button is fully programmable to your specifications.

Grind Select Indicator Lights — Lets you know clearly which cycle length is currently grinding.

On/Off Switch

TIME
10
SECONDS

ADS ADVANCED DIGITAL SYSTEM™

Factory-set grind cycles can be easily changed.

Grind time for each cycle is accurately displayed by the read-out. To change, simply follow these steps (each button is set independently):

- Turn the grinder off. Place a brew cone and filter in the machine.
- Press and hold the grind cycle button. At the same time press and release the ON/OFF button.
- Now press the grind cycle button again. The display will indicate its current setting. Immediately following it will begin grinding. The display will indicate the elapsed time from zero.
- When the desired level is reached, release the button.*
- Wait until the motor has stopped completely, and press any OTHER button on the same side. This sets the time and exits the programming mode.

NOTE: *Add time by pressing and holding the flashing button until the desired level is reached.

Digital InterLock™ System — Only from Curtis.

Automatic Grinder-to-Brewer Interface

Designed for fresh grind/fresh brew programs, the Curtis Digital InterLock™ System connects compatible Digital Control Coffee Brewers to Digital Control Grinder for simple, error-proof grinding and brewing.

With the push of a button, the Grinder automatically conveys the selected grind volume to the brewing system. The brew selection is then "locked-in" to the corresponding grind cycle...incorrect cycles are "locked out." If both brewer sides are in use, the Grinder's memory stores the information and waits until a side is available.

Standard Features

- **Dual-Hoppers –** Include decaf or a specialty coffee in your fresh grind/fresh brew program.
- **Infinitely Adjustable Grind Settings –** From extra coarse to extra-fine grinding.
- **Larger Hopper Capacity than Competitive Models –** Reduces labor costs with less frequent refills.
- **Positive Flow Auger –** For uninterrupted coffee dispensing.
- **Self-Adjusting Brew Rails –** Easily handle large Gemini brew baskets.
- **Wide Match Profile –** Brew rails never extend beyond housing with larger baskets.
- **Large Grinding Burrs –** Provide faster more efficient operation.
- **Accurate and Consistent Throw –** For even distribution, chaff reduction.
- **Uniform Grind**
- **Powerful 1/2 hp Motor –** Equipped with safety circuit breaker.
- **Standard 120VAC Operation**

ILGD

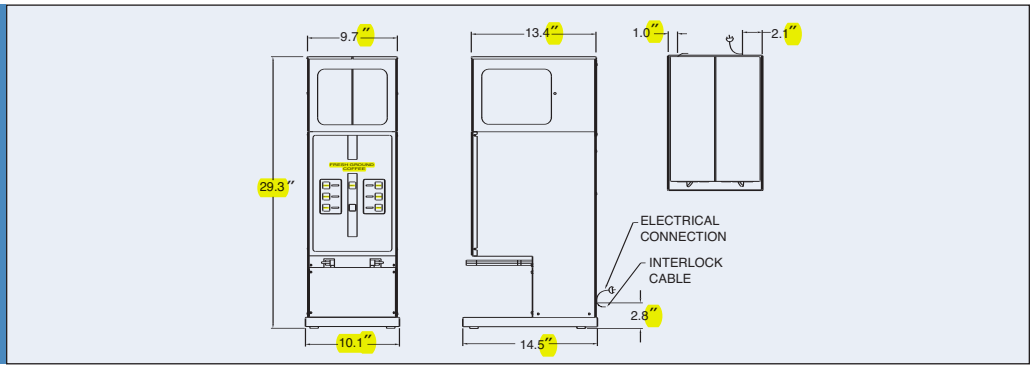

SPECIFICATIONS	ILGD
Grind Cycles (Per Side)	3 per side
Hopper Capacity (Whole Beans)	7.5 lbs ea. side
Timer	Digital InterLock
Portion Range	1 to 99 Seconds
Dimensions (H x W x D)	29.3" x 10.1" x 14.5"
Voltage	120VAC/60Hz
Power Requirements	8.0A
Motor	1/2 hp
Shipping Weight (lbs.)	60 lbs.
Cube (cu. ft.)	4.6 cu. ft.

FACTORY SETTINGS	ILGD GRINDER
Volume/Grind Setting	Large - 15 sec. Medium - 10 sec. Small - 5 sec.

WILBUR CURTIS COMPANY, INC.
6913 Acco Street, Montebello, CA 90640-5403
Telephone: 800-421-6150 · 323-837-2300
Fax: 323-837-2406
www.wilburcurtis.com

© 2001-2006 Wilbur Curtis Company, Inc.

Printed in U.S.A. MAY/06 – 7829 – F-3122 – Rev A

MODELS
8792, 8793

8792 Gourmet 1000™ Dual Automatic Airpot Brewer
(with Hot Water Faucet)

8793 Gourmet 1000 Dual Automatic Airpot Brewer
(with Hot Water Faucet)

Gourmet 1000™ Dual Airpot brewers offer volume brewing, proper extraction and holding capacity. Traditional electromechanical controls and a high level of component compatibility mean many years of dependable, quality brewing. These uniquely designed units eliminate flow control problems and resist clogging in adverse water conditions. Coffee is brewed into an airpot which is easily transportable to remote serving areas where coffee will remain preserved for optimal temperature and taste.

Model 8792/8793
shown with optional 7759

Features

- **Dual brewer** will accommodate demand fluctuations and brewing variables.
- **A high level of commonality of parts** with other Bloomfield models will significantly reduce the inventory of spare parts required to service many body styles.
- Exclusive design provides **easy access to components** for quick service.
- **Water volume adjustments** can be made with ease, no panels to remove or tools required.
- **Ready-to-Brew light** indicates the proper water temperature to help eliminate the guesswork in brewing.
- **Premium quality thermostat** has a full-length stainless steel sensing bulb that recognizes water temperature extremely accurately and cycles less frequently.
- **Independent front-mounted hot water faucet** allows drawing of hot water without affecting coffee taste or brewing cycle.
- Built-in **pour over feature** provides flexibility.
- **Superior sprayhead design** spreads water over the coffee grounds, creating agitation and a floating action that completely saturates the coffee to capture the full, rich essence.
- **Unique water valve with built-in flow control** assures consistent operation at 20-80 p.s.i.
- **One-piece drawn stainless steel water tank** has a superior design for extended life.
- **Rugged base rails** provide stability and strength, while minimizing brewer height and locating placement of airpot.
- High quality easy to clean **stainless steel construction**.
- **Convenient tank heater** on/off switches located on the rear of unit povides energy savings options.

Accessories

Bloomfield offers a full line of airpot, thermal servers and coffee grinders.

BLOOMFIELD®

BLOOMFIELD

3218

MODELS
8792, 8793

E9253 STD 4 E9253

DIMENSIONS: INCH / (MM)

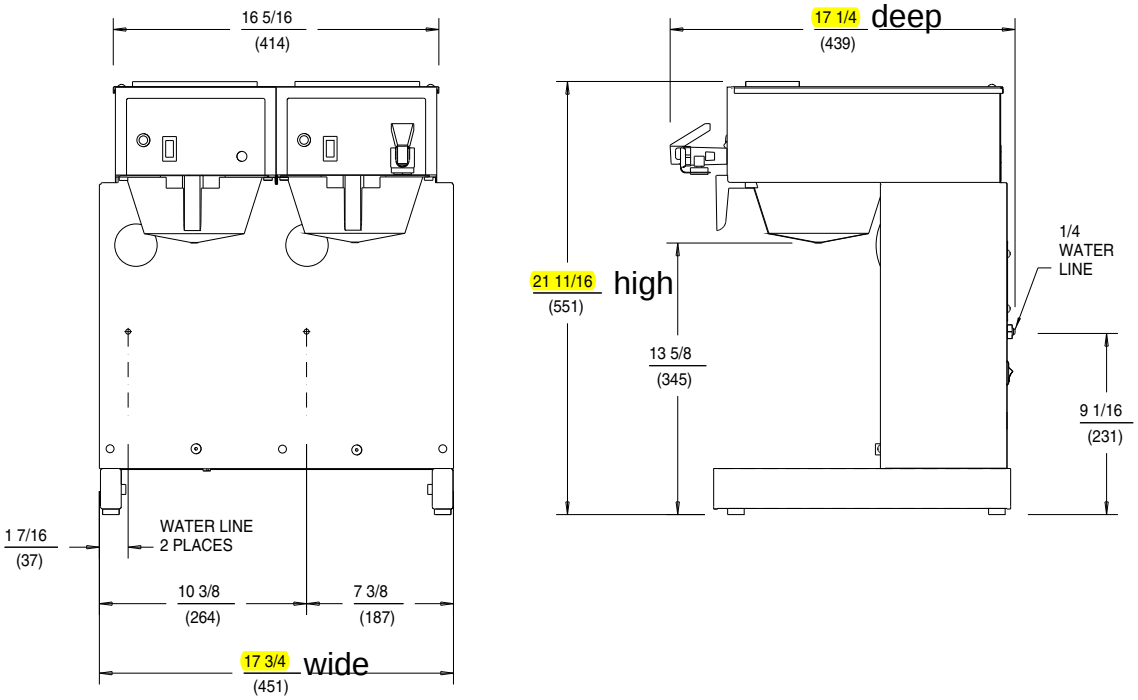

SPECIFICATIONS:

MODELS	WATTS	VOLTS	AMPS	PHASE	POWER SUPPLY CORD
8792	4000	120/240 4 WIRE	17	SINGLE	NONE
8793	7000	115/230 4 WIRE	30.5	SINGLE	NONE

NOTE: Specifications are subject to change without notice and are not intended for installation purposes. See operation and maintenance manual for complete instructions.

ACCESSORIES: *See the Bloomfield Brew Brew product catalog for a complete listing of brewers and accessories.*

Complete line of Airpots
for use with brewers with 13 3/8" clearance heights

2.5 Liter Thermal Servers
for use with brewers with 17 1/2" clearance heights

1.9 Liter Hand Held Pours
for use with brewers with 9 1/2" clearance heights

BLOOMFIELD INDUSTRIES
2 ERIK CIRCLE, PO BOX 280, VERDI, NV 89439 U.S.A.
(888) 356-5362 • FAX (800) 356-5142 • www.wellsbloomfield.com • Export: (775) 689-5700 • (775) 689-5972
5850 KEATON CRESCENT, MISSISSAUGA, ONTARIO L5R 3K2 CANADA • (905) 507-1700 • FAX (905) 507-1777 • www.bloomcan.com
©2001 BLOOMFIELD INDUSTRIES • PRINTED IN THE U.S.A. • 04/01 • REV (-) • PART NO. 75214
JUNE 14, 2019

3268

TRUE MANUFACTURING CO., INC.
U.S.A. FOODSERVICE DIVISION
2001 East Terra Lane • O'Fallon, Missouri 63366-4434 • (636)240-2400
Fax (636)272-2408 • Toll Free (800)325-6152 • Intl Fax# (001)636-272-7546
Parts Dept. (800)424-TRUE • Parts Dept. Fax# (636)272-9471 • www.truemfg.com

Project Name: CNH/OSU
Location: TAHLEQUAH, OK
Item #: 3268 *Qty:* 1
Model #: T-43-HC

AIA #
SIS #

Model:
T-43-HC

T-Series:
Reach-In Solid Swing Door Refrigerator with Hydrocarbon Refrigerant

T-43-HC

- True's solid door reach-in's are designed with enduring quality that protects your long term investment.
- Designed using the highest quality materials and components to provide the user with colder product temperatures, lower utility costs, exceptional food safety and the best value in today's food service marketplace.
- High capacity, factory balanced, refrigeration system holds 33°F to 38°F (.5°C to 3.3°C) for best food preservation in extreme conditions.
- Factory engineered, self-contained, capillary tube system using environmentally friendly R290 hydro carbon refrigerant that has zero (0) ozone depletion potential (ODP), & three (3) global warming potential (GWP).
- Stainless steel solid doors and front. The finest stainless available with higher tensile strength for fewer dents and scratches.
- LED interior lighting provides more even lighting throughout the cabinet. Safety shielded.
- Adjustable, heavy duty PVC coated shelves.
- Positive seal self-closing doors. Lifetime guaranteed door hinges and torsion type closure system.

Bottom mounted units feature:

- "No stoop" lower shelf.
- Storage on top of cabinet.
- Compressor performs in coolest, most grease free area of kitchen.
- Easily accessible condenser coil for cleaning.

ROUGH-IN DATA

Specifications subject to change without notice.
Chart dimensions rounded up to the nearest ⅛" (millimeters rounded up to next whole number).

Model	Doors	Shelves	Cabinet Dimensions (inches) (mm) W	D	H*	HP	Voltage	Amps	NEMA Config.	Cord Length (total ft.) (total m)	Crated Weight (lbs.) (kg)
T-43-HC	2	6	47 1194	29½ 750	78⅜ 1991	½ ⅓	115/60/1 230-240/50/1	5.4 2.4	5-15P ▲	Varies Varies	380 173

* Height does not include 5" (127 mm) for castors or 6" (153 mm) for optional legs.

▲Plug type varies by country.

MADE WITH INNOVATION IN THE USA · 5 YEAR COMPRESSOR WARRANTY USA · ENERGY STAR · c UL us · CE · natural refrigerant.

Printed in U.S.A.

APPROVALS:

AVAILABLE AT:

Model:
T-43-HC

T-Series:
Reach-In Solid Swing Door Refrigerator with Hydrocarbon Refrigerant

STANDARD FEATURES

DESIGN
- True's commitment to using the highest quality materials and oversized refrigeration systems provides the user with colder product temperatures, lower utility costs, exceptional food safety and the best value in today's food service marketplace.

REFRIGERATION SYSTEM
- Factory engineered, self-contained, capillary tube system using environmentally friendly R290 hydro carbon refrigerant that has zero (0) ozone depletion potential (ODP), & three (3) global warming potential (GWP).
- High capacity, factory balanced refrigeration system that maintains cabinet temperatures of 33°F to 38°F (.5°C to 3.3°C) for the best in food preservation.
- State of the art, electronically commutated evaporator and condenser fan motors. ECM motors operate at higher peak efficiencies and move a more consistent volume of air which produces less heat, reduces energy consumption and provides greater motor reliability.
- Bottom mounted condensing unit positioned for easy maintenance. Compressor runs in coolest and most grease free area of the kitchen. Allows for storage area on top of unit.

CABINET CONSTRUCTION
- Exterior - Stainless steel front. Anodized quality aluminum ends, back and top.
- Interior - attractive, NSF approved, white aluminum liner. Stainless steel floor with coved corners.
- Insulation - entire cabinet structure and solid door are foamed-in-place using a high density, polyurethane insulation that has zero ozone depletion potential (ODP) and zero global warming potential (GWP).
- Welded, heavy duty steel frame rail, black powder coated for corrosion protection.
- Frame rail fitted with 4" (102 mm) diameter stem castors - locks provided on front set.

DOORS
- Stainless steel exterior with white aluminum liners to match cabinet interior. Doors extend full width of cabinet shell. Door locks standard.
- Lifetime guaranteed recessed door handles. Each door fitted with 12" (305 mm) long recessed handle that is foamed-in-place with a sheet metal interlock to ensure permanent attachment.
- Positive seal self-closing doors. Lifetime guaranteed door hinges and torsion type closure system.
- Magnetic door gaskets of one piece construction, removable without tools for ease of cleaning.

SHELVING
- Six (6) adjustable, heavy duty PVC coated wire shelves 20⅞"L x 22½"D (531 mm x 572 mm). Four (4) chrome plated shelf clips included per shelf.
- Shelf support pilasters made of same material as cabinet interior; shelves are adjustable on ½" (13 mm) increments.

LIGHTING
- LED interior lighting provides more even lighting throughout the cabinet. Safety shielded.

MODEL FEATURES
- Exterior temperature display.
- Evaporator is epoxy coated to eliminate the potential of corrosion.

ELECTRICAL
- Unit completely pre-wired at factory and ready for final connection to a 115/60/1 phase, 15 amp dedicated outlet. Cord and plug set included.

115/60/1
NEMA-5-15R

OPTIONAL FEATURES/ACCESSORIES
Upcharge and lead times may apply.
- ❑ 6" (153 mm) standard legs.
- ❑ 6" (153 mm) seismic/flanged legs.
- ❑ Alternate door hinging (factory installed).
- ❑ Additional shelves.
- ❑ Half door bun tray racks. Each holds up to eleven 12"L x 20"D (305 mm x 508 mm) sheet pans (sold separately).
- ❑ Full door bun tray racks. Each holds up to twenty-two 12"L x 20"D (305 mm x 508 mm) sheet pans (sold separately).

PLAN VIEW

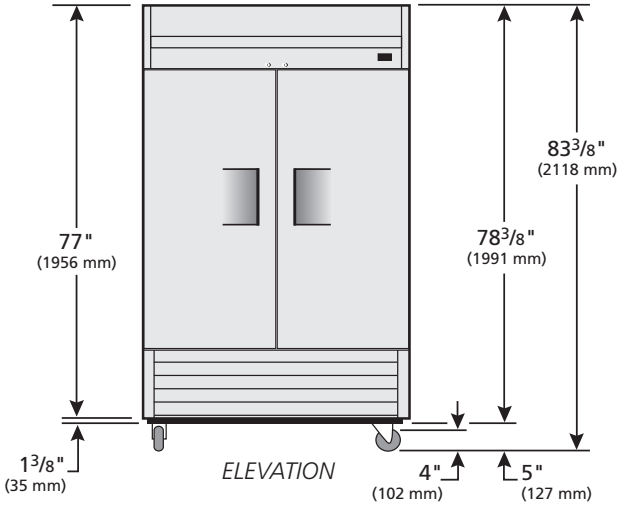

ELEVATION

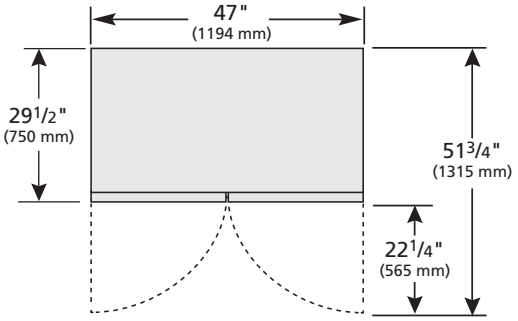

PLAN VIEW

WARRANTY
Three year warranty on all parts and labor and an additional 2 year warranty on compressor. (U.S.A. only)

METRIC DIMENSIONS ROUNDED UP TO THE NEAREST WHOLE MILLIMETER

SPECIFICATIONS SUBJECT TO CHANGE WITHOUT NOTICE

Model	Elevation	Right	Plan	3D	Back
T-43-HC					

TRUE MANUFACTURING CO., INC.
2001 East Terra Lane • O'Fallon, Missouri 63366-4434 • (636)240-2400 • Fax (636)272-2408 • Toll Free (800)325-6152 • Intl. Fax# (001)636-272-7546 • www.truemfg.com

3269

TRUE MANUFACTURING CO., INC.
U.S.A. FOODSERVICE DIVISION
2001 East Terra Lane • O'Fallon, Missouri 63366-4434 • (636)240-2400
Fax (636)272-2408 • Toll Free (800)325-6152 • Intl Fax# (001)636-272-7546
Parts Dept. (800)424-TRUE • Parts Dept. Fax# (636)272-9471 • www.truemfg.com

Project Name: CNH/OSU
Location: TAHLEQUAH, OK
Item #: 3269 *Qty:* 1
Model #: T-43F-HC

AIA #
SIS #

Model:
T-43F-HC

T-Series:
Reach-In Solid Swing Door Freezer with Hydrocarbon Refrigerant

T-43F-HC

- True's solid door reach-in's are designed with enduring quality that protects your long term investment.
- Designed using the highest quality materials and components to provide the user with colder product temperatures, lower utility costs, exceptional food safety and the best value in today's food service marketplace.
- Factory engineered, self-contained, capillary tube system using environmentally friendly R290 hydro carbon refrigerant that has zero (0) ozone depletion potential (ODP), & three (3) global warming potential (GWP).
- High capacity, factory balanced refrigeration system that maintains -10°F (-23.3°C) temperatures. Ideal for both frozen foods and ice cream.
- Stainless steel solid doors and front. The finest stainless available with higher tensile strength for fewer dents and scratches.
- Adjustable, heavy duty PVC coated shelves.
- Positive seal self-closing doors. Lifetime guaranteed door hinges and torsion type closure system.
- Automatic defrost system time-initiated, temperature-terminated. Saves energy consumption and provides shortest possible defrost cycle.

Bottom mounted units feature:

- "No stoop" lower shelf.
- Storage on top of cabinet.
- Compressor performs in coolest, most grease free area of kitchen.
- Easily accessible condenser coil for cleaning.

ROUGH-IN DATA

Specifications subject to change without notice.
Chart dimensions rounded up to the nearest ⅛" (millimeters rounded up to next whole number).

Model	Doors	Shelves	Cabinet Dimensions (inches) (mm) W	D	H*	HP	Voltage	Amps	NEMA Config.	Cord Length (total ft.) (total m)	Crated Weight (lbs.) (kg)
T-43F-HC	2	6	47 1194	29½ 750	78⅜ 1991	1 1	115/60/1 230-240/50/1	9.6 5.5	5-15P ▲	9 2.74	410 186

* Height does not include 5" (127 mm) for castors or 6" (153 mm) for optional legs.

▲Plug type varies by country.

MADE WITH INNOVATION IN THE USA · 5 YEAR COMPRESSOR WARRANTY USA · ENERGY STAR · c UL us · CE · natural refrigerant.

Printed in U.S.A.

APPROVALS:

AVAILABLE AT:

9/18 JUNE 14, 2019

Model:
T-43F-HC

T-Series:
Reach-In Solid Swing Door Freezer with Hydrocarbon Refrigerant

STANDARD FEATURES

DESIGN
- True's commitment to using the highest quality materials and oversized refrigeration systems provides the user with colder product temperatures, lower utility costs, exceptional food safety and the best value in today's food service marketplace.

REFRIGERATION SYSTEM
- Factory engineered, self-contained, capillary tube system using environmentally friendly R290 hydro carbon refrigerant that has zero (0) ozone depletion potential (ODP), & three (3) global warming potential (GWP).
- High capacity, factory balanced refrigeration system that maintains -10°F (-23.3°C) temperatures. Ideal for both frozen foods and ice cream.
- State of the art, electronically commutated evaporator and condenser fan motors. ECM motors operate at higher peak efficiencies and move a more consistent volume of air which produces less heat, reduces energy consumption and provides greater motor reliability.
- Bottom mounted condensing unit positioned for easy cleaning. Compressor runs in coolest and most grease free area of the kitchen. Allows for storage area on top of unit.
- Automatic defrost system time-initiated, temperature-terminated. Saves energy consumption and provides shortest possible defrost cycle.

CABINET CONSTRUCTION
- Exterior - Stainless steel front. Anodized quality aluminum ends, back and top.
- Interior - attractive, NSF approved, clear coated aluminum liner. Stainless steel floor with coved corners.
- Insulation - entire cabinet structure and solid door are foamed-in-place using a high density, polyurethane insulation that has zero ozone depletion potential (ODP) and zero global warming potential (GWP).
- Welded, heavy duty steel frame rail, black powder coated for corrosion protection.
- Frame rail fitted with 4" (102 mm) diameter stem castors - locks provided on front set.

DOORS
- Stainless steel exterior with white aluminum liners to match cabinet interior. Doors extend full width of cabinet shell. Door locks standard.
- Lifetime guaranteed recessed door handles. Each door fitted with 12" (305 mm) long recessed handle that is foamed-in-place with a sheet metal interlock to ensure permanent attachment.
- Positive seal self-closing doors. Lifetime guaranteed door hinges and torsion type closure system.
- Magnetic door gaskets of one piece construction, removable without tools for ease of cleaning.

SHELVING
- Six (6) adjustable, heavy duty PVC coated wire shelves 20⅞"L x 22½"D (531 mm x 572 mm). Four (4) chrome plated shelf clips included per shelf.
- Shelf support pilasters made of same material as cabinet interior; shelves are adjustable on ½" (13 mm) increments.

LIGHTING
- LED Interior lighting - safety shielded. Lights activated by rocker switch mounted above doors.

MODEL FEATURES
- Exterior temperature display.
- Evaporator is epoxy coated to eliminate the potential of corrosion.
- Rear airflow guards prevent product from blocking optimal airflow.
- NSF/ANSI Standard 7 compliant for open food product.

ELECTRICAL
- Unit completely pre-wired at factory and ready for final connection to a 115/60/1 phase, 15 amp dedicated outlet. Cord and plug set included.

115/60/1
NEMA-5-15R

OPTIONAL FEATURES/ACCESSORIES
Upcharge and lead times may apply.
- ❑ 230 - 240V / 50 Hz.
- ❑ 6" (153 mm) standard legs.
- ❑ 6" (153 mm) seismic/flanged legs.
- ❑ Novelty baskets.
- ❑ Additional shelves.

PLAN VIEW

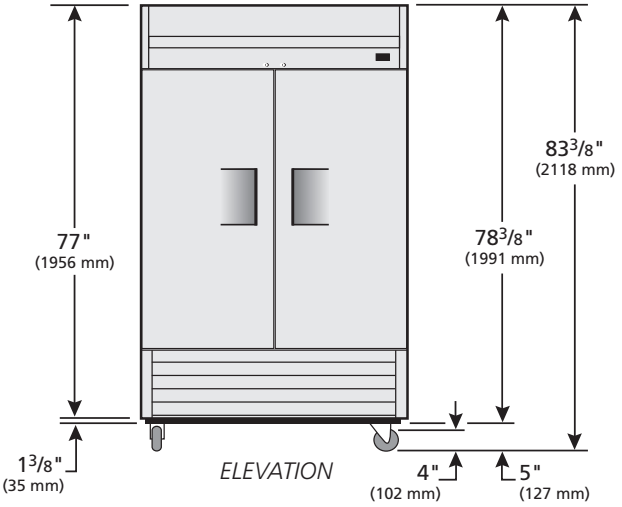

ELEVATION

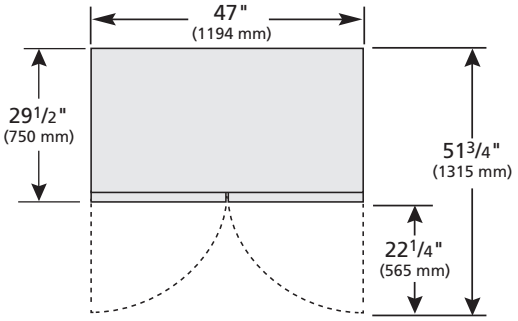

PLAN VIEW

WARRANTY
Three year warranty on all parts and labor and an additional 2 year warranty on compressor. (U.S.A. only)

METRIC DIMENSIONS ROUNDED UP TO THE NEAREST WHOLE MILLIMETER

SPECIFICATIONS SUBJECT TO CHANGE WITHOUT NOTICE

Model	Elevation	Right	Plan	3D	Back
T-43F-HC					

TRUE MANUFACTURING CO., INC.
2001 East Terra Lane • O'Fallon, Missouri 63366-4434 • (636)240-2400 • Fax (636)272-2408 • Toll Free (800)325-6152 • Intl. Fax# (001)636-272-7546 • www.truemfg.com

TRUE MANUFACTURING CO., INC.
U.S.A. FOODSERVICE DIVISION
2001 East Terra Lane • O'Fallon, Missouri 63366-4434 • (636)240-2400
Fax (636)272-2408 • Toll Free (800)325-6152 • Intl Fax# (001)636-272-7546
Parts Dept. (800)424-TRUE • Parts Dept. Fax# (636)272-9471 • www.truemfg.com

Project Name: CNH/OSU
Location: TAHLEQUAH. P
Item #: 3269a *Qty:* 1
Model #: T-23-HC

AIA #
SIS #

Model:
T-23-HC

T-Series:
Reach-In Solid Swing Door Refrigerator with Hydrocarbon Refrigerant

T-23-HC

- True's solid door reach-in's are designed with enduring quality that protects your long term investment.
- Designed using the highest quality materials and components to provide the user with colder product temperatures, lower utility costs, exceptional food safety and the best value in today's food service marketplace.
- Factory engineered, self-contained, capillary tube system using environmentally friendly R290 hydro carbon refrigerant that has zero (0) ozone depletion potential (ODP), & three (3) global warming potential (GWP).
- High capacity, factory balanced refrigeration system that maintains cabinet temperatures of 33°F to 38°F (.5°C to 3.3°C) for the best in food preservation.
- Stainless steel solid door and front. The finest stainless available with higher tensile strength for fewer dents and scratches.
- Adjustable, heavy duty PVC coated shelves.
- Positive seal self-closing door. Lifetime guaranteed door hinges and torsion type closure system.

Bottom mounted units feature

- "No stoop" lower shelf.
- Storage on top of cabinet.
- Compressor performs in coolest, most grease free area of kitchen.
- Easily accessible condenser coil for cleaning.

ROUGH-IN DATA

Specifications subject to change without notice.
Chart dimensions rounded up to the nearest ⅛" (millimeters rounded up to next whole number).

Model	Doors	Shelves	Cabinet Dimensions (inches) (mm) L	D	H*	HP	Voltage	Amps	NEMA Config.	Cord Length (total ft.) (total m)	Crated Weight (lbs.) (kg)
T-23-HC	1	3	27 686	29½ 750	78⅜ 1991	¼ ¼	115/60/1 230-240/50/1	2.2 1.2	5-15P ▲	9 2.74	285 130

* Height does not include 5" (127 mm) for castors or 6" (153 mm) for optional legs.

▲ Plug type varies by country.

APPROVALS:

AVAILABLE AT:

Model:
T-23-HC

T-Series:
Reach-In Solid Swing Door Refrigerator with Hydrocarbon Refrigerant

STANDARD FEATURES

DESIGN
- True's commitment to using the highest quality materials and optimized refrigeration systems provides the user with colder product temperatures, lower utility costs, exceptional food safety and the best value in today's food service marketplace.

REFRIGERATION SYSTEM
- Factory engineered, self-contained, capillary tube system using environmentally friendly R290 hydrocarbon refrigerant that has zero (0) ozone depletion potential (ODP), & three (3) global warming potential (GWP).
- High capacity, factory balanced refrigeration system that maintains cabinet temperatures of 33°F to 38°F (.5°C to 3.3°C) for the best in food preservation.
- State of the art, electronically commutated evaporator and condenser fan motors. ECM motors operate at higher peak efficiencies and move a more consistent volume of air which produces less heat, reduces energy consumption and provides greater motor reliability.
- Bottom mounted condensing unit positioned for easy maintenance. Compressor runs in coolest and most grease free area of the kitchen. Allows for storage area on top of unit.

CABINET CONSTRUCTION
- Exterior - Stainless steel front. Anodized quality aluminum ends. Corrosion resistant GalFan coated steel back.
- Interior - attractive, NSF approved, clear coated aluminum liner. Stainless steel floor with coved corners.
- Insulation - entire cabinet structure and solid door are foamed-in-place using a high density, polyurethane insulation that has zero ozone depletion potential (ODP) and zero global warming potential (GWP).
- Welded, heavy duty steel frame rail, black powder coated for corrosion protection.
- Frame rail fitted with 4" (102 mm) diameter stem castors - locks provided on front set.

DOOR
- Stainless steel exterior with clear aluminum liner to match cabinet interior. Door extends full width of cabinet shell. Door locks standard.
- Lifetime guaranteed recessed door handle. Door fitted with 12" (305 mm) long recessed handle that is foamed-in-place with a sheet metal interlock to ensure permanent attachment.
- Positive seal self-closing door. Lifetime guaranteed door hinges and torsion type closure system.
- Magnetic door gasket of one piece construction, removable without tools for ease of cleaning.

SHELVING
- Three (3) adjustable, heavy duty PVC coated wire shelves 22 7/8"L x 23 1/4"D (582 mm x 591 mm). Four (4) chrome plated shelf clips included per shelf.
- Shelf support pilasters made of same material as cabinet interior; shelves are adjustable on ½" (13 mm) increments.

LIGHTING
- Interior lighting - safety shielded. Lights activated by rocker switch mounted above door.

MODEL FEATURES
- Exterior temperature display.
- Evaporator is epoxy coated to eliminate the potential of corrosion.

ELECTRICAL
- Unit completely pre-wired at factory and ready for final connection to a 115/60/1 phase, 15 amp dedicated outlet. Cord and plug set included.

115/60/1
NEMA-5-15R

OPTIONAL FEATURES/ACCESSORIES
Upcharge and lead times may apply.
- ❑ 230 - 240V / 50 Hz.
- ❑ 6" (153 mm) standard legs.
- ❑ 6" (153 mm) seismic/flanged legs.
- ❑ Alternate door hinging (factory installed).
- ❑ Additional shelves.
- ❑ Half door bun tray racks. Each holds up to eleven 18"L x 26"D (458 mm x 661 mm) sheet pans (sold separately).
- ❑ Full door bun tray rack. Holds up to twenty-two 18"L x 26"D (458 mm x 661 mm) sheet pans (sold separately).

PLAN VIEW

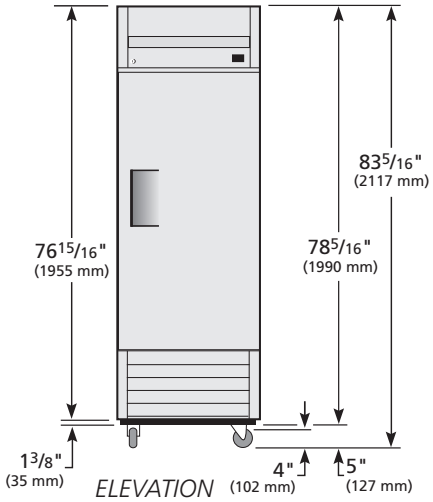

ELEVATION

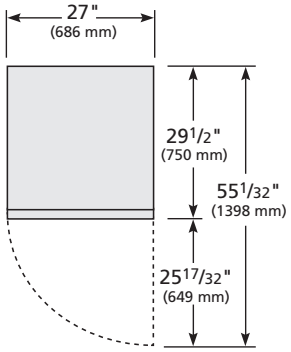

PLAN VIEW

WARRANTY
Three year warranty on all parts and labor and an additional 2 year warranty on compressor. (U.S.A. only)

METRIC DIMENSIONS ROUNDED UP TO THE NEAREST WHOLE MILLIMETER

SPECIFICATIONS SUBJECT TO CHANGE WITHOUT NOTICE

Model	Elevation	Right	Plan	3D	Back
T-23-HC	TFEY53E	TFEY03S	TFEY03P	TFEY633	

TRUE MANUFACTURING CO., INC.
2001 East Terra Lane • O'Fallon, Missouri 63366-4434 • (636)240-2400 • Fax (636)272-2408 • Toll Free (800)325-6152 • Intl. Fax# (001)636-272-7546 • www.truemfg.com

3269c
REFRIGERATOR WITH
TOP FREEZER-NO ICEMAKER

GTE21GSH/GML

GE® ENERGY STAR® 21.2 Cu. Ft. Top-Freezer Refrigerator

DIMENSIONS AND INSTALLATION INFORMATION (IN INCHES)

OVERALL DIMENSIONS	Height to top of hinge (in.) **A**	**66-3/4**
	Height to top of case (in.) **B**	**66-1/4**
	Case depth without door (in.) **C**	**29**
	Case depth less door handle (in.) **D**	**32-1/4**
	Case depth with door handle (in.) **E**	**34**
	Depth with fresh food door open 90˚ (in.) **F**	**62-3/4**
	Width (in.) **G**	**32-7/8**
	Width with door open 90˚ with door handle (in.) **H**	**35-1/2**
AIR CLEARANCES	Each side (in.)	**1/8**
	Top (in.)	**1/8**
	Back (in.)	**1**

POWER / RATINGS
Volts/Hertz/Amps
120v; 60Hz; 15A

FRONT VIEW

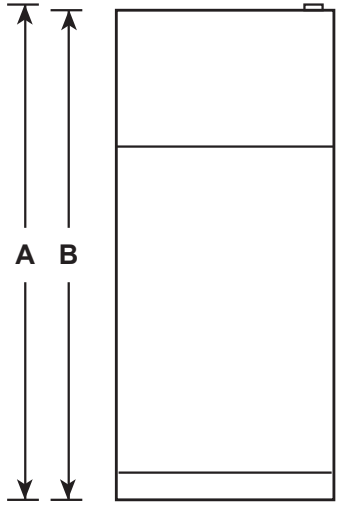

TOP VIEW

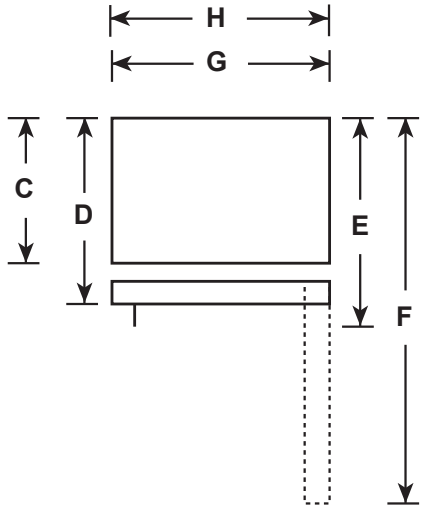

ENERGY STAR®
GE has determined
product meets the
STAR guidelines
gy efficiency.

GE APPLIANCES

For answers to your Monogram, GE Café™ Series, GE Profile™ Series or GE Appliances product questions, visit our website at geappliances.com or call GE Answer Center® Service, 800.626.2000.

Specification Revised 2/18

3269c

GTE21GSH/GML

GE® ENERGY STAR® 21.2 Cu. Ft. Top-Freezer Refrigerator

FEATURES AND BENEFITS

2014 ENERGY STAR® qualified

32-3/4" wide

Upfront temperature controls – Easy-to-use controls regulate both fresh food and freezer sections

Adjustable spill-resistant glass shelves – Designed to contain spills for easy cleaning

Equipped for optional icemaker – Easily accommodates the installation of an icemaker

Snack drawer – Conveniently stores favorite foods and allows for quick, easy access

Adjustable-humidity drawers – Controls helps food stay fresh

Large door bins – Deep bins handle large containers in the door and free up valuable shelf space

Wire freezer shelf – Provides additional storage for frozen foods

Spillproof freezer floor – Seamless design of the freezer floor wipes up easily for quick cleanup

Model GTE21GTHSS – Stainless steel

Model GTE21GMLES – Slate

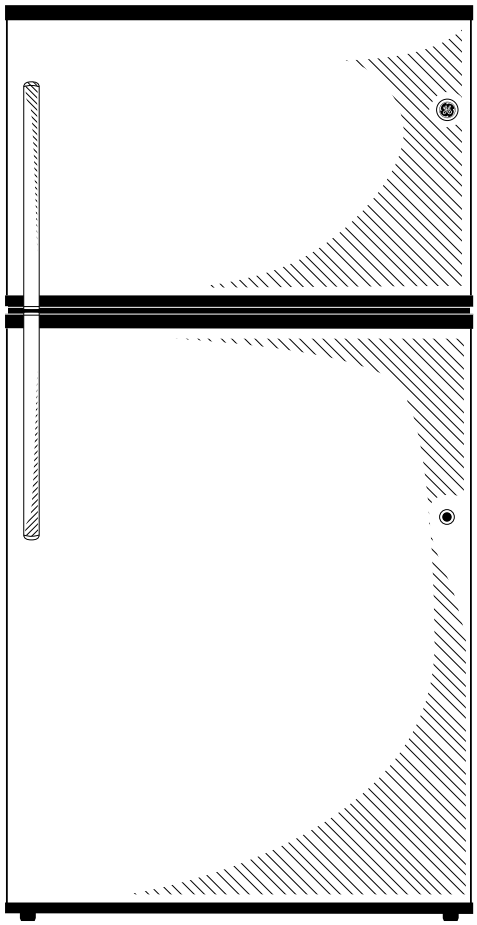

ADA COMPLIANT

UFAS COMPLIANT

GE APPLIANCES

For answers to your Monogram, GE Café™ Series, GE Profile™ Series or GE Appliances product questions, visit our website at geappliances.com or call GE Answer Center® Service, 800.626.2000.

ENERGY STAR

As an ENERGY STAR® partner, GE has determined that this product meets the ENERGY STAR guidelines for energy efficiency.

Specification Revised 2/18

3269e

FRIGIDAIRE PROFESSIONAL

All Refrigerator

FPRU19F8RF

3269e
SINGLE DOOR REFRIGERATOR
PHOTO REFLECTS COMPANION FREEZER W OPTIONAL TRIM KIT

18.6 Cu. Ft.

Shown with companion, All-Freezer model FPFU19F8RF and optional coordinated Dual 75" Louvered Trim Kit (TRIMKITEZ2).

Signature Features

PureAir Ultra® Filtration System
Fresh air offers great taste. PureAir Ultra® Filtration removes up to 7 times more odor than baking soda to keep ingredients tasting fresh.[1]

SpacePro™ Shelving System
Offers quick access to fresh ingredients with organizational solutions designed for space optimization including SpacePro™ Door Bins, SpacePro™ Crisper Bins and SpacePro™ Full-Width Drawer.

Smudge-Proof™
Resists fingerprints and cleans easily.

JUNE 14, 2019

Product Dimensions

Height (Cabinet Incl. Hinge)	70-5/8"
Width	32"
Depth (Including Door)	26-1/2"

More Easy-To-Use Features

Automatic Alerts
Alerts you if the door is left open, if the temperature rises or if the power goes out so your food stays at its optimal temperature.

SpacePro™ Crisper Bins
Keep a variety of foods fresh and easily accessible with our SpacePro™ Crisper Bins.

SpacePro™ Full-Width Drawer
Fits a variety of fresh foods for quick access.

SpacePro™ Shelving
Optimize your refrigerator space with adjustable shelving.

SpacePro™ Door Bins
Access fresh food from our adjustable gallon-size door bins quickly.

PowerBright™ LED Lighting
Find fresh foods quickly with PowerBright™ LED Lighting.

PrecisionPro Controls™
Adjust settings at the touch of a button.

Sabbath Mode (Star-K® Certified)

Available in:

Stainless (F)

Optional Trim Kits

Single 79" Louvered or 75" Collar Trim Kit (TRIMKITEZ1)
Optional trim kit that is designed to provide a built-in look for the All Refrigerator. Install with louver for 79" fit or easy-to-remove louver for a 75" fitted collar look.

Dual 79" Louvered or 75" Collar Trim Kit (TRIMKITEZ2)
Optional trim kit that is designed to provide a built-in look for the All Refrigerator and All Freezer when the units are installed next to each other. Install with louver for 79" fit or easy-to-remove louver for a 75" fitted collar look.

[1]Based on a six-hour closed door test of certain common odors in the fresh food compartment of a 21 Cu. Ft. refrigerator.

FRIGIDAIRE
PROFESSIONAL.

All Refrigerator

FPRU19F8RF **18.6 Cu. Ft.**

Features	
Door Design	Flat
Door Finish	Smudge-Proof™ Stainless Steel
Door Handle Design	Stainless Steel
Cabinet Finish	Grey
Door Hinge Covers	Hidden
Automatic Door Closer	Yes
Leveling System/Leveling Legs	Yes/4
Controls	
Controls	PrecisionPro™
Location of Controls	Inside Cabinet, on Top
Temperature Display C°/F°	Yes
Control Lock/Light	Yes/No
Temp Failure Alerts (Audible & Duration)	Yes
Door Ajar Alert (Audible)	Yes
Power Failure Alert (Duration)	Yes
Air Filter/Air Filter Change Indicator Light	PureAir Ultra®/Yes
Refrigerator Features	
Refrigerator Shelves	2 SpacePro™ Adjustable Glass
Full-Width Deli Drawer	1 SpacePro™
Full-Width Bottom Crisper	1 SpacePro™
Crisper Divider Quantity	2 (Per Crisper)
Full-Width Gallon Door Bin	2 Clear SpacePro™
Half-Width Liter Bin	4 Clear SpacePro™
Dairy Bin	1 Clear
Lighting	8-Point PowerBright™ LED
Optional Accessories	
Single Louvered Trim Kit	PN# TRIMKITEZ1
Dual Louvered Trim Kit	PN# TRIMKITEZ2
Certifications	
Sabbath Mode (Star-K® Certified)	Yes
Specifications	
Total Capacity (Cu. Ft.)	18.6
Shelf Area (Sq. Ft.)	20.6
Annual Energy (kWH)	331
Annual Energy Cost (.12/kWH)	$40
Power Supply Connection Location	Right Bottom Rear
Voltage Rating	115V/60Hz/20A
Connected Load (kW rating) @ 115 Volts[1]	0.55
Amps @ 115 Volts	15
Minimum Circuit Required (Amps)	20
Shipping Weight (Approx.)	245 Lbs.

[1]An electrical supply with grounded three-prong receptacle is required. The power supply circuit must be installed in accordance with current edition of National Electrical Code (NFPA 70) and local codes & ordinances.

Optional Trim Kits

Kits include top and side trim pieces, louvered grille, reversible kickplate and leveling system to fit 75" or 79" opening height.

Single 79" Louvered or 75" Collar Trim Kit
PN# TRIMKITEZ1

Dual 79" Louvered or 75" Collar Trim Kit
PN# TRIMKITEZ2
(Includes hardware to secure side-by-side units together.)

Note: Both kits attach directly to cabinetry through top trim piece or louvered grille to stabilize unit(s).

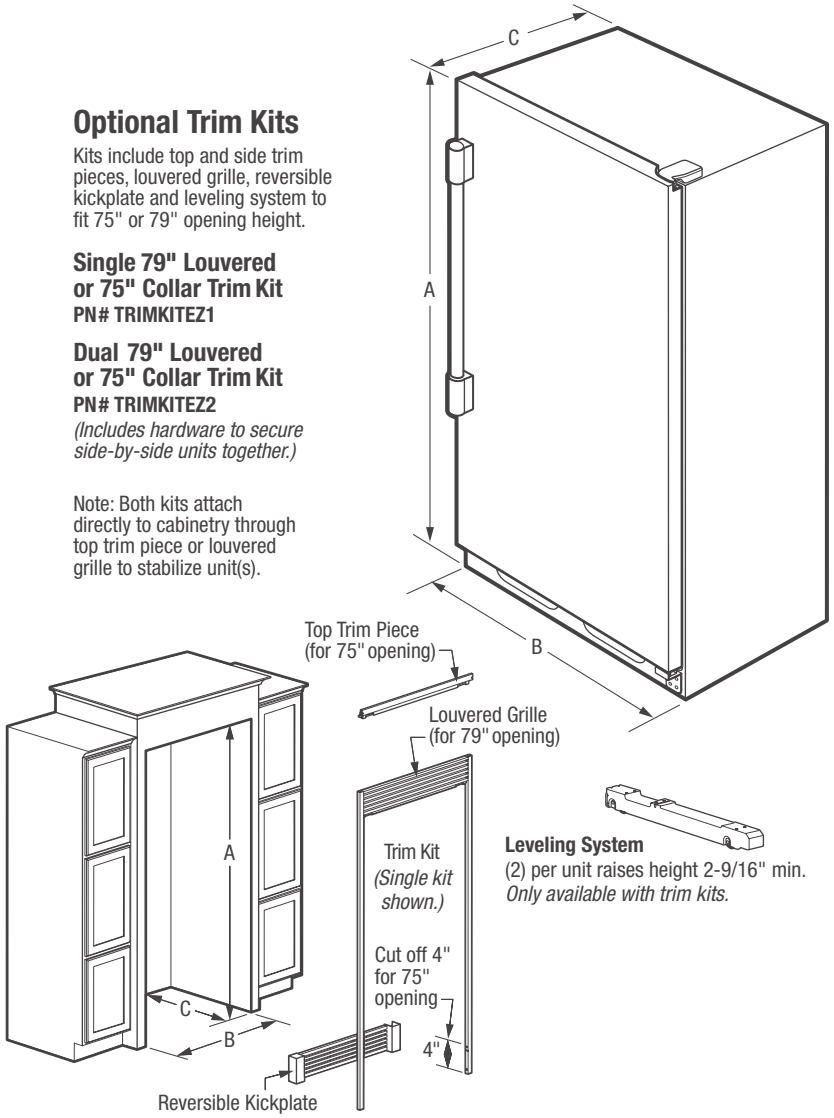

Leveling System
(2) per unit raises height 2-9/16" min.
Only available with trim kits.

NOTE: For planning purposes only. Always consult local and national electric and plumbing codes. Refer to Product Installation Guide for detailed installation instructions on the web at frigidaire.com.

C US

Overall Exterior Dimensions	
A - Height (Incl. Door)/(Cabinet Incl. Hinge)	71-3/8"/70-5/8"
B - Width	32"
C - Depth (Incl. Door)	26-1/2"
Depth with Door Open 90°	57-3/8"

Built-In Cutout Dimensions	
Single Unit without Trim Kit –	
A - Height	72"
B - Width	33"
C - Depth	25-1/4" min.[1]
Single Unit with Trim Kit & Leveling System –	
A - Height	75" or 79"
B - Width	33"
C - Depth	25-1/4" min.[1]

Built-In Cutout Dimensions	
Dual Unit[2] without Trim Kit –	
A - Height	72"
B - Width	66"
C - Depth	25-1/4" min.[1]
Dual Unit[2] with Trim Kit & Leveling System –	
A - Height	75" or 79"
B - Width	66"
C - Depth	25-1/4" min.[1]

[1]Minimum depth from face of cabinet side panels and requires recessed electrical outlet.
[2]Side-by-Side

Accessories information available on the web at ***frigidaire.com***

FRIGIDAIRE
USA • 10200 David Taylor Drive • Charlotte, NC 28262 • 1-800-FRIGIDAIRE • **frigidaire.com**
CANADA • 5855 Terry Fox Way • Mississauga, ON L5V 3E4 • 1-800-265-8352 • **frigidaire.ca**

JUNE 14, 2019

Specifications subject to change.

© 2015 Electrolux Home Products, Inc.

FRIGIDAIRE PROFESSIONAL

All Refrigerator

FPRU19F8RF **18.6 Cu. Ft.**

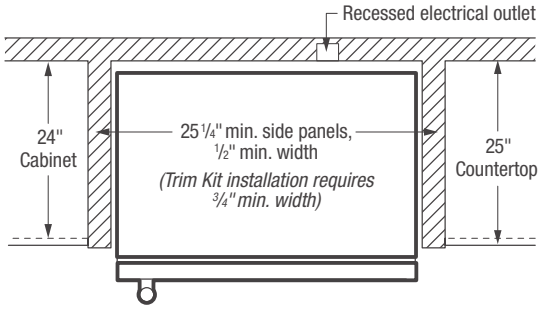

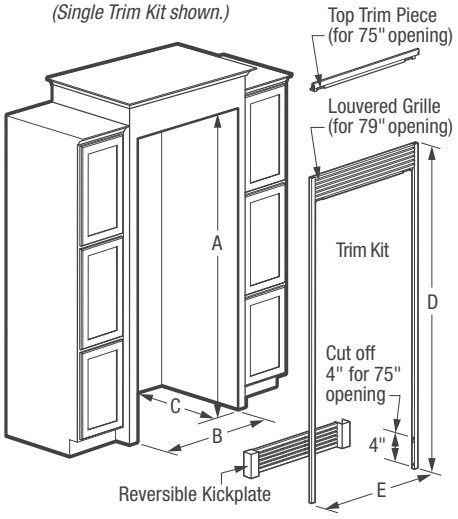

Optional Trim Kits & Dimensions

Kits include top and side trim pieces, louvered grille, reversible kickplate and leveling system to fit 75" or 79" opening height.

Single Louvered Trim Kit
PN# TRIMKITEZ1
(D) 75⅛" or 79⅛" (E) 34¾"

Double Louvered Trim Kit
PN# TRIMKITEZ2
(Includes hardware to secure side-by-side units together.)
(D) 75⅛" or 79⅛" (E) 67⅛"

Note: Both kits attach directly to cabinetry through top trim piece or louvered grille to stabilize unit(s). Refer to detailed kit installation instructions packed with kit or on web.

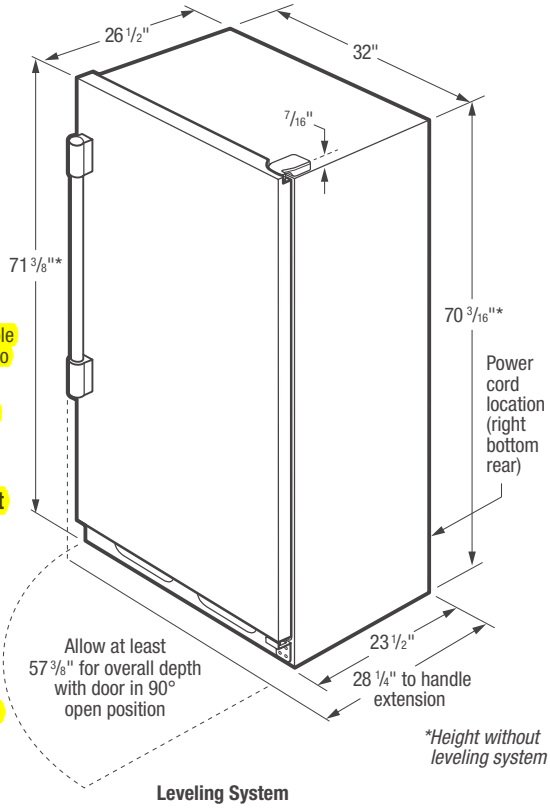

All-Refrigerator Cutout Dimensions

Built-In Installation *(without Trim Kit)*
Single Unit
(A) 72" (B) 33" (C) 25¼" min.†
Double Unit (Side-by-Side)
(A) 72" (B) 66" (C) 25¼" min.†

Built-In Installation *(with Trim Kit & Leveling System)*
Single Unit
(A) 75" or 79" (B) 33" (C) 25¼" min.†
Double Unit (Side-by-Side)
(A) 75" or 79" (B) 66" (C) 25¼" min.†

Leveling System
(2) per unit raises height 2-9/16" min.
Only available with trim kits.

†*Minimum depth from face of cabinet side panels and requires recessed electrical outlet.*

Built-In All-Refrigerator Specifications

- Product Shipping Weight – 245 Lbs.
- An electrical supply with grounded three-prong receptacle is required. The power supply circuit must be installed in accordance with current edition of *National Electrical Code (NFPA 70)* and local codes & ordinances.
- Voltage Rating – 115V / 60 Hz / 20 Amps
- Connected Load (kW Rating) @ 115 Volts = 0.55 kW
- Amps @ 115 Volts = 15 Amps
- Always consult local and national electric codes.
- Minimum 25-1/4" depth requires recessed electrical outlet.
- To allow for ease of installation, tape excess power cord to back of unit.
- When installing refrigerator adjacent to wall, cabinet or other appliance that extends beyond front edge of unit, 20" minimum clearance recommended to allow for optimum 140° door swing, providing complete drawer / crisper access and removal. *(Absolute 4" minimum clearance will ONLY allow for 90° door swing which will provide limited drawer / crisper access with restricted removal.)*
- Minimum 3/8" clearance required for sides and top of refrigerator or freezer with 1" clearance at rear to allow for ease of installation, proper air circulation, and plumbing / electrical connections.
- To ensure optimum performance, *(do not install in areas where temperature drops below 55°F or rises above 110°F)* and avoid installing in direct sunlight or close proximity to range, dishwasher or other heat source.
- Refrigerator must be placed on level surface of hard material, same height as flooring. Surface must support approximately 800 lbs. when fully loaded. Unit equipped with 4-point leveling.

"Built-In Look" Specifications

- Minimum opening of 72" H x 33" W x 25-1/4" D required for single-unit "Built-In Look" installation; 66" W required for double-unit installation. (72" H to be measured from finished floor to underside of soffit or overhead cabinet.)
- Remove all wall / floor molding prior to built-in installation.

Optional Trim Kit Specifications

- If optional Single or Double Louvered Trim Kit is to be used, different cutout dimensions are required. Kit can be adapted to fit either 75" or 79" opening height. *(Refer to cutout dimensions on this page and detailed Louvered Trim Kit installation instructions included with kit or on web.)*
- Remove all wall / floor molding prior to built-in installation.

Note: For planning purposes only. Refer to Product Installation Guide on the web at frigidaire.com for detailed instructions.

Optional Accessories

- Single Louvered Trim Kit – (PN # TRIMKITEZ1).
- Double Louvered Trim Kit – (PN # TRIMKITEZ2).
- PureAdvantage® Air Filter Replacement Cartridge – (PN # 241754001).

FRIGIDAIRE
USA • 10200 David Taylor Drive • Charlotte, NC 28262 • 1-800-FRIGIDAIRE • **frigidaire.com**
CANADA • 5855 Terry Fox Way • Mississauga, ON L5V 3E4 • 1-800-265-8352 • **frigidaire.ca**

JUNE 14, 2019

Specifications subject to change.

FPRU19F8R 07/15

© 2015 Electrolux Home Products, Inc.

3269f

FRIGIDAIRE PROFESSIONAL

All Freezer

FPFU19F8RF

3269f
FREEZER, ALL: SINGLE DOOR
PHOTO REFLECTS COMPANION REFRIGERATOR W OPTIONAL TRIM KIT

18.6 Cu. Ft.

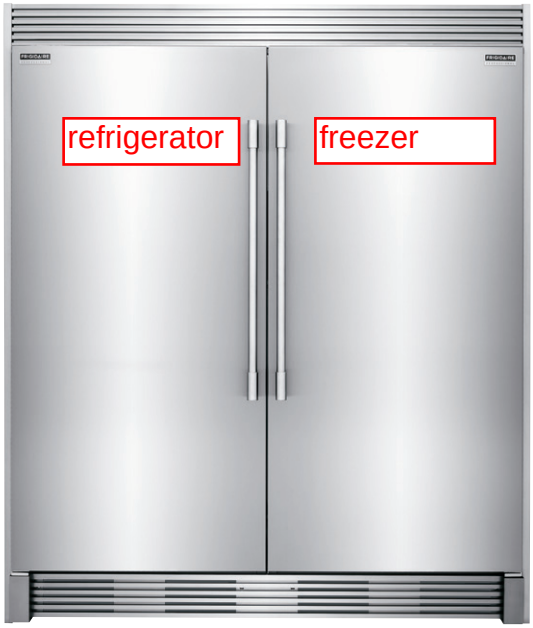

Shown with companion, All-Refrigerator model FPRU19F8RF and optional coordinated Dual 75" Louvered Trim Kit (TRIMKITEZ2).

Signature Features

PureAir Ultra® Filtration System
Fresh air offers great taste. PureAir Ultra® Filtration removes up to 7 times more odor than baking soda to keep ingredients tasting fresh by removing odor particles with fast-acting, highly absorbent carbon technology.[1]

SpacePro™ Shelving System
Always have ingredients on-hand and accessible with organizational solutions designed for space optimization like SpacePro™ Door Bins, SpacePro™ Shelving and SpacePro™ Storage Baskets.

Smudge-Proof™
Resists fingerprints and cleans easily.

JUNE 14, 2019

Product Dimensions

Height (Cabinet Incl. Hinge)	70-5/8"
Width	32"
Depth (Including Door)	26-1/2"

More Easy-To-Use Features

Automatic Alerts
Alerts you if the door is left open, if the temperature rises or if the power goes out so your food stays at its optimal temperature.

Soft Freeze™ Zone
Keep frozen foods soft and easy to eat with the Soft Freeze™ Zone. Great for foods like ice cream, sticks of margarine and bread.

PowerBright™ LED Lighting
Find frozen foods quickly with PowerBright™ LED Lighting.

SpacePro™ Shelving
Optimize your freezer space with adjustable shelving.

SpacePro™ Door Bins
Adjustable door bins for quick access to frozen foods.

SpacePro™ Storage Baskets
Two full-width adjustable storage baskets keep things organized, and accessible.

PowerPlus® Ice Maker
Unlimited access to ice.

PrecisionPro Controls™
Adjust settings at the touch of a button.

Sabbath Mode (Star-K® Certified)

Available in:

Stainless (F)

Optional Trim Kits

Single 79" Louvered or 75" Collar Trim Kit (TRIMKITEZ1)
Optional trim kit that is designed to provide a built-in look for the All Freezer. Install with louver for 79" fit or easy-to-remove louver for a 75" fitted collar look.

Dual 79" Louvered or 75" Collar Trim Kit (TRIMKITEZ2)
Optional trim kit that is designed to provide a built-in look for the All Refrigerator and All Freezer when the units are installed next to each other. Install with louver for 79" fit or easy-to-remove louver for a 75" fitted collar look.

[1]Based on a six-hour closed door test of certain common odors in the fresh food compartment of a 21 Cu. Ft. refrigerator.

FRIGIDAIRE PROFESSIONAL

All Freezer

FPFU19F8RF **18.6 Cu. Ft.**

Features	
Door Design	Flat
Door Finish	Smudge-Proof™ Stainless Steel
Door Handle Design	Stainless Steel
Cabinet Finish	Grey
Door Hinge Covers	Hidden
Automatic Door Closer	Yes
Leveling System / Leveling Legs	Yes / 4
Controls	
Controls	PrecisionPro™
Location of Controls	Inside Cabinet, on Top
Temperature Display C° / F°	Yes
Control Lock / Light	No / Yes
Temp Failure Alerts (Audible & Duration)	Yes
Door Ajar Alert (Audible)	Yes
Power Failure Alert (Duration)	Yes
Air Filter / Air Filter Change Indicator Light	PureAir Ultra® / Yes
Freezer Features	
Freezer Shelves	2 SpacePro™ Adjustable Glass
PowerPlus® Ice Maker	Yes
Ice Bin	Yes
Full-Width Mid-Level Basket	1 Plastic SpacePro™
Full-Width Bottom Basket	1 Plastic SpacePro™
Full-Width Gallon Door Bin	1 Clear SpacePro™
Half-Width Liter Bin	5 Clear SpacePro™
Soft Freeze™ Zone	Yes
Lighting	8-Point PowerBright™ LED
Optional Accessories	
Single Louvered Trim Kit	PN # TRIMKITEZ1
Dual Louvered Trim Kit	PN # TRIMKITEZ2
Certifications	
Sabbath Mode (Star-K® Certified)	Yes
Specifications	
Total Capacity (Cu. Ft.)	18.6
Shelf Area (Sq. Ft.)	20.9
Annual Energy (kWH)	593
Annual Energy Cost (.12 / kWH)	$71
Power Supply Connection Location	Right Bottom Rear
Water Inlet Location	Left Bottom Rear
Voltage Rating	115V / 60Hz / 20A
Connected Load (kW rating) @ 115 Volts[1]	0.55
Amps @ 115 Volts	15
Minimum Circuit Required (Amps)	20
Shipping Weight (Approx.)	245 Lbs.

[1]An electrical supply with grounded three-prong receptacle is required. The power supply circuit must be installed in accordance with current edition of National Electrical Code (NFPA 70) and local codes & ordinances.

Optional Trim Kits

Kits include top and side trim pieces, louvered grille, reversible kickplate and leveling system to fit 75" or 79" opening height.

Single 79" Louvered or 75" Collar Trim Kit
PN# TRIMKITEZ1

Dual 79" Louvered or 75" Collar Trim Kit
PN# TRIMKITEZ2
(Includes hardware to secure side-by-side units together.)

Note: Both kits attach directly to cabinetry through top trim piece or louvered grille to stabilize unit(s).

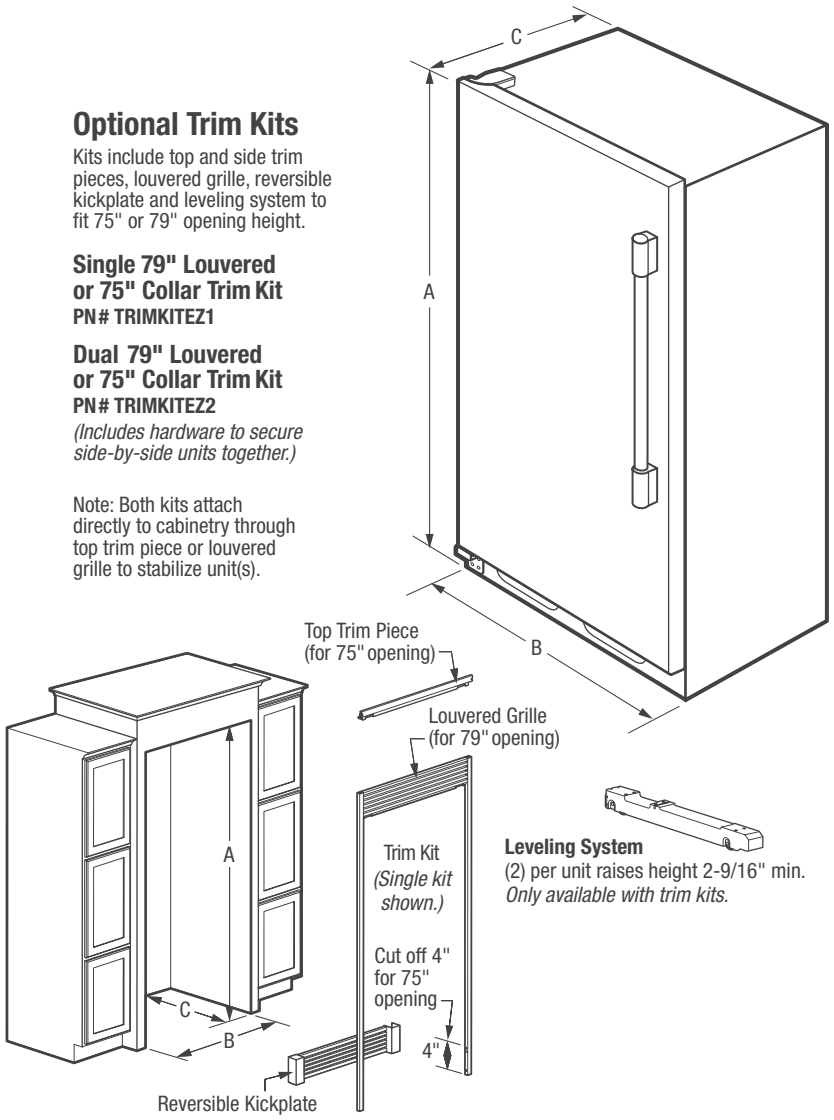

Leveling System
(2) per unit raises height 2-9/16" min.
Only available with trim kits.

NOTE: For planning purposes only. Always consult local and national electric and plumbing codes. Refer to Product Installation Guide for detailed installation instructions on the web at frigidaire.com.

C US

Overall Exterior Dimensions	
A - Height (Incl. Door)/(Cabinet Incl. Hinge)	71-3/8" / 70-5/8"
B - Width	32"
C - Depth (Incl. Door)	26-1/2"
Depth with Door Open 90°	57-3/8"

Built-In Cutout Dimensions	
Single Unit without Trim Kit –	
A - Height	72"
B - Width	33"
C - Depth	25-1/4" min.[1]
Single Unit with Trim Kit & Leveling System –	
A - Height	75" or 79"
B - Width	33"
C - Depth	25-1/4" min.[1]

Built-In Cutout Dimensions	
Dual Unit[2] without Trim Kit –	
A - Height	72"
B - Width	66"
C - Depth	25-1/4" min.[1]
Dual Unit[2] with Trim Kit & Leveling System –	
A - Height	75" or 79"
B - Width	66"
C - Depth	25-1/4" min.[1]

[1]Minimum depth from face of cabinet side panels and requires recessed electrical outlet.
[2]Side-by-Side

*Accessories information available on the web at **frigidaire.com***

FRIGIDAIRE
USA • 10200 David Taylor Drive • Charlotte, NC 28262 • 1-800-FRIGIDAIRE • **frigidaire.com**
CANADA • 5855 Terry Fox Way • Mississauga, ON L5V 3E4 • 1-800-265-8352 • **frigidaire.ca**

JUNE 14, 2019

FPFU19F8R 07/15

© 2015 Electrolux Home Products, Inc.

Specifications subject to change.

FRIGIDAIRE PROFESSIONAL

All Freezer

FPFU19F8RF **18.6 Cu. Ft.**

Note:
no ice maker
in this unit

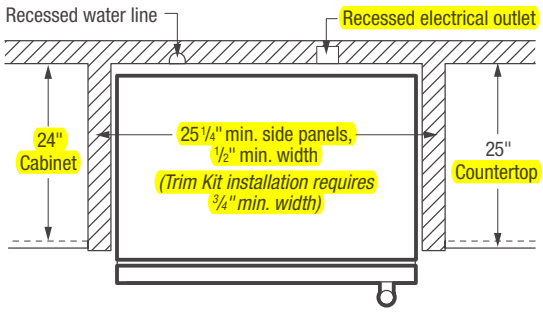

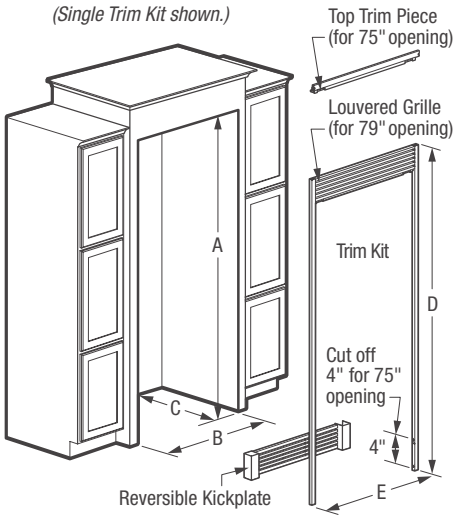

Optional Trim Kits & Dimensions

Kits include top and side trim pieces, louvered grille, reversible kickplate and leveling system to fit 75" or 79" opening height.

Single Louvered Trim Kit
PN# TRIMKITEZ1
(D) 75⅛" or 79⅛" (E) 34¾"

Double Louvered Trim Kit
PN# TRIMKITEZ2
(Includes hardware to secure side-by-side units together.)
(D) 75⅛" or 79⅛" (E) 67⅛"

Note: Both kits attach directly to cabinetry through top trim piece or louvered grille to stabilize unit(s). Refer to detailed kit installation instructions packed with kit or on web.

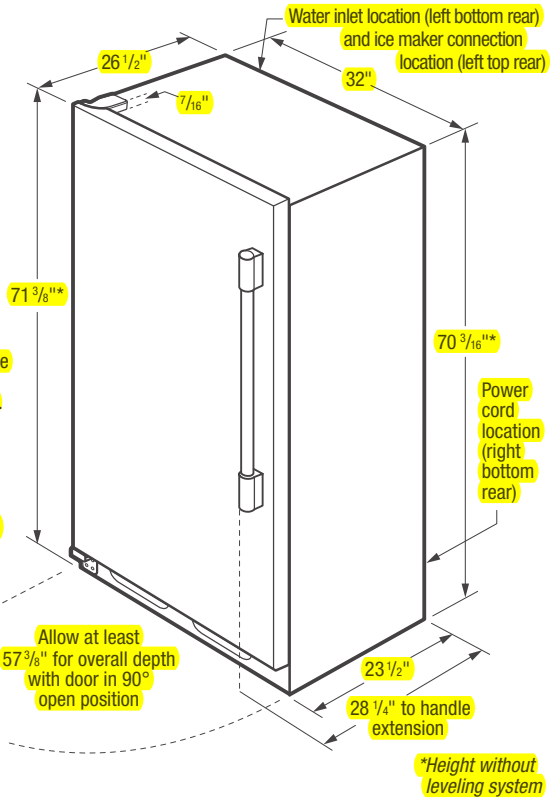

All-Freezer Cutout Dimensions

Built-In Installation
(without Trim Kit)
Single Unit
(A) 72" (B) 33" (C) 25¼" min.†
Double Unit (Side-by-Side)
(A) 72" (B) 66" (C) 25¼" min.†

Built-In Installation
(with Trim Kit & Leveling System)
Single Unit
(A) 75" or 79" (B) 33" (C) 25¼" min.†
Double Unit (Side-by-Side)
(A) 75" or 79" (B) 66" (C) 25¼" min.†

Leveling System
(2) per unit raises height 2-9/16" min.
Only available with trim kits.

†*Minimum depth from face of cabinet side panels and requires recessed electrical outlet.*

Built-In All-Freezer Specifications

- Product Shipping Weight – 245 Lbs.
- An electrical supply with grounded three-prong receptacle is required. The power supply circuit must be installed in accordance with current edition of National Electrical Code *(NFPA 70)* and local codes & ordinances.
- Voltage Rating – 115V/60 Hz/20 Amps
- Connected Load (kW Rating) @ 115 Volts = 0.55 kW
- Amps @ 115 Volts = 15 Amps
- Always consult local and national electric & plumbing codes.
- Water line for ice maker can enter opening through floor or rear wall Copper tubing recommended between cold water line and water connection location. Water line tubing recommended is 48" minimum length by 1/4" diameter. Installation of easily accessible shutoff valve in water line required.
- Minimum 25-1/4" depth requires recessed electrical outlet and copper water line.
- To allow for ease of installation, tape excess power cord to back of unit.
- To allow for ease of moving out side-by-side units after installation, 84" minimum length of coiled copper tubing recommended.
- When installing freezer adjacent to wall, cabinet or other appliance that extends beyond front edge of unit, 20" minimum clearance recommended to allow for optimum 140° door swing, providing complete drawer / crisper access and removal. *(Absolute 4" minimum clearance will ONLY allow for 90° door swing which will provide limited drawer / crisper access with restricted removal.)*
- Minimum 3/8" clearance required for sides and top of refrigerator or freezer with 1" clearance at rear to allow for ease of installation, proper air circulation, and plumbing/electrical connections.
- To ensure optimum performance, *(do not install in areas where temperature drops below 55°F or rises above 110°F)* and avoid installing in direct sunlight or close proximity to range, dishwasher or other heat source.
- Freezer must be placed on level surface of hard material, same height as flooring. Surface must support approximately 800 lbs. when fully loaded. Unit equipped with 4-point leveling.

"Built-In Look" Specifications

- Minimum opening of 72" H x 33" W x 25-1/4" D required for single-unit "Built-In Look" installation; 66" W required for double-unit installation. (72" H to be measured from finished floor to underside of soffit or overhead cabinet.)
- Remove all wall / floor molding prior to built-in installation.

Optional Trim Kit Specifications

- If optional Single or Double Louvered Trim Kit is to be used, different cutout dimensions are required. Kit can be adapted to fit either 75" or 79" opening height. *(Refer to cutout dimensions on this page and detailed Louvered Trim Kit installation instructions included with kit or on web.)*
- Remove all wall / floor molding prior to built-in installation.

Note: For planning purposes only. Refer to Product Installation Guide on the web at frigidaire.com for detailed instructions.

Optional Accessories

- Single Louvered Trim Kit – (PN # TRIMKITEZ1).
- Double Louvered Trim Kit – (PN # TRIMKITEZ2).
- PureAdvantage® Air Filter Replacement Cartridge – (PN # 241754001).

FRIGIDAIRE
USA • 10200 David Taylor Drive • Charlotte, NC 28262 • 1-800-FRIGIDAIRE • **frigidaire.com**
CANADA • 5855 Terry Fox Way • Mississauga, ON L5V 3E4 • 1-800-265-8352 • **frigidaire.ca**

JUNE 14, 2019

Specifications subject to change.

FPFU19F8R 07/15

© 2015 Electrolux Home Products, Inc.

3277

MODEL M600, M601, M601-SL CADAVER LIFT ACCESSORIES

Series M600 Roller Pallet Assembly

STANDARD DESIGN FEATURES

- All stainless steel construction
- 11 gauge tubing for heavy duty use
- 10 maintenance-free nylon rollers for easy transfer
- Can be used from either end for loading or unloading
- Flip style tray stops at each end with bumper protection
- A necessity for the Total Roll Cadaver System.

M600

Model M600-SC Roller Pallet Scale Assembly

- (10) maintenance-free nylon rollers for easy transfer
- Can be used from either end for loading or unloading
- Full-functioning scale

M600 -SC

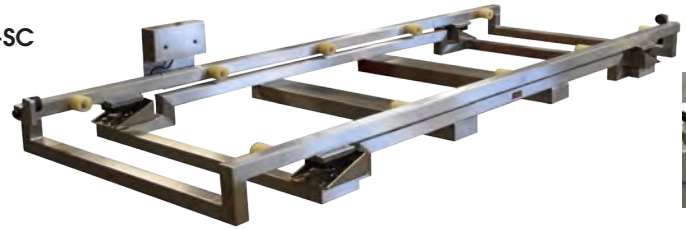

Series M601 Full Roller Pallet Assembly

- (5) maintenance-free conveyor rollers for easy transfer
- Can be used from either end for loading or unloading
- Flip-style tray stops at each end with bumper protection

M601

Model M601-SL Side Loading Roller Pallet Assembly

- (10) maintenance-free conveyor rollers for easy transfer
- Flip-style tray stops for outer side

M601-SL

Series M601-ES End/Side Loading Roller Pallet Assembly

STANDARD DESIGN FEATURES

- All stainless steel construction
- 11 gauge tubing for heavy duty use
- (5) Rows rota-rollers for easy transfer, utilizing both the front or side of the pallet

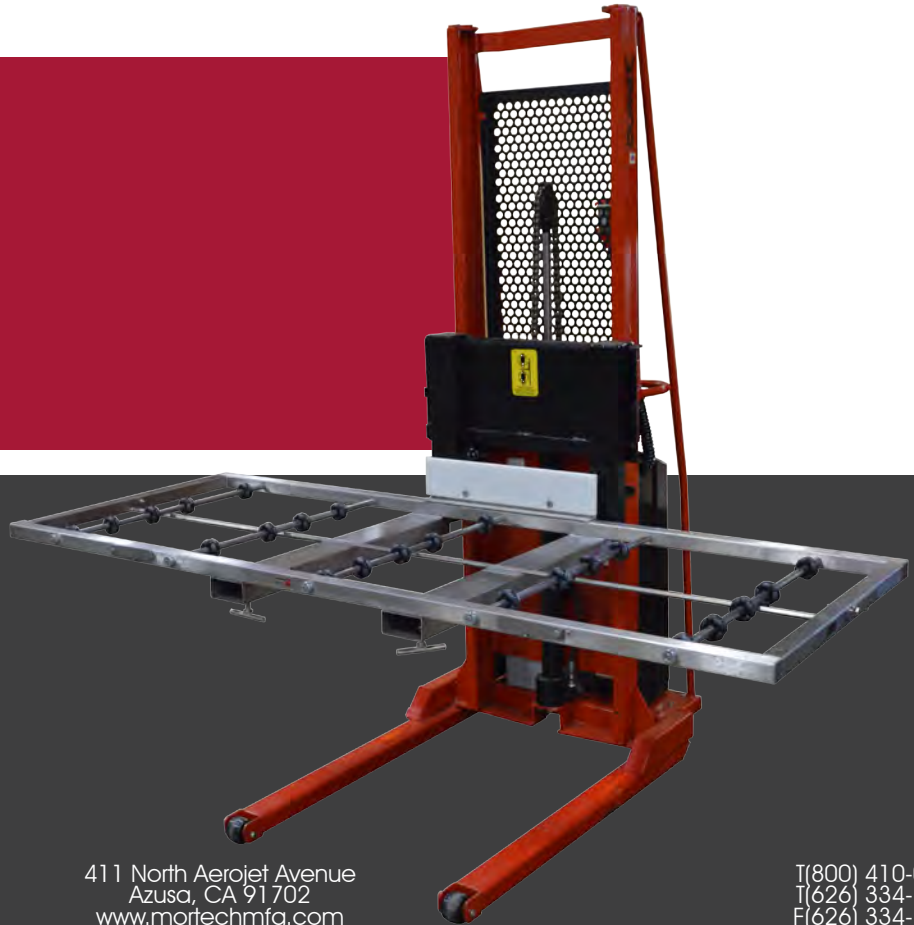

411 North Aerojet Avenue
Azusa, CA 91702
www.mortechmfg.com

T(800) 410-0100
T(626) 334-1471
F(626) 334-1704

CADAVER HANDLING & STORAGE SYSTEMS

SERIES M678-FP MANUAL FOOT PUMP OPERATION CADAVER LIFT

Dimensions
Width: ..... 30 in./76 cm.
Depth: ..... 48.375 in./123 cm.
Height: ..... 77.75 in./197 cm.
Load Capacity: .....1000 lbs./453 k.

STANDARD DESIGN FEATURES

- Floor locks, safety screen, and foot guard are standard
- Front phenolic wheels are 5" diameter and static, rear phenolic swivel casters are 4" diameter

- Forks:1 in./2 cm. thick X 3 in./7 cm. wide X 30 in./76 cm. long
- Adjustable span up to 25 in./63 cm.
- 15 in./38 cm. load center
- Base leg span - 15 in./ 38 cm. inside, 21 in./53 cm. outside

M678-FP FOOT PUMP OPERATED CADAVER LIFT

M678

M678 BATTERY OPERATED HYDRAULIC CADAVER LIFT ADJUSTABLE

SERIES M678 HYDRAULIC CADAVER LIFT

The battery-operated hydraulic cadaver lift is designed with a narrow straddle which allows you to ease through congested work areas and narrow aisles. An expanded metal safety screen with reinforced edges provides operator protection. The hydraulic lift is powered by a heavy-duty 12V battery with a built-in 12A automatic tapering battery charger. The lift is equipped with floor protective 2 in./5 cm. diameter front-load phenolic wheels and a rear foot-controlled floor brake mechanism.

Lifting Specifications

Max Height:..... 61.375 in./156 cm.
(forks @ standard setting)
Min Height:..... 23.875 in./61 cm.
(with forks reversed)
Max. Height:..... 83.5 in./212 cm.
(with forks reversed)

OPTIONAL FEATURES
1. Front and side rolling caster for all-direction moving
2. Front 5" diameter phenolic wheel works with floor ramps

SERIES M678 HYDRAULIC CADAVER LIFT

411 North Aerojet Avenue
Azusa, CA 91702
www.mortechmfg.com

T(800) 410-0100
T(626) 334-1471
F(626) 334-1704

MODEL M600, M601, M601-SL CADAVER LIFT ACCESSORIES

Series M600 Roller Pallet Assembly

STANDARD DESIGN FEATURES

- All stainless steel construction
- 11 gauge tubing for heavy duty use
- 10 maintenance-free nylon rollers for easy transfer
- Can be used from either end for loading or unloading
- Flip style tray stops at each end with bumper protection
- A necessity for the Total Roll Cadaver System.

M600

Model M600-SC Roller Pallet Scale Assembly

- (10) maintenance-free nylon rollers for easy transfer
- Can be used from either end for loading or unloading
- Full-functioning scale

M600 -SC

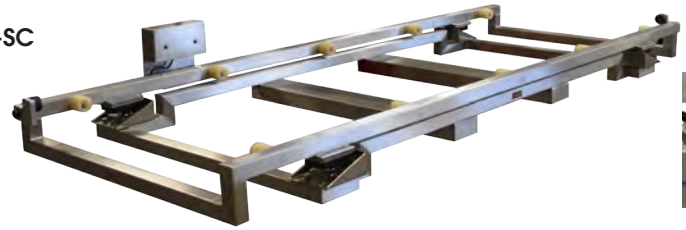

Series M601 Full Roller Pallet Assembly

- (5) maintenance-free conveyor rollers for easy transfer
- Can be used from either end for loading or unloading
- Flip-style tray stops at each end with bumper protection

M601

Model M601-SL Side Loading Roller Pallet Assembly

- (10) maintenance-free conveyor rollers for easy transfer
- Flip-style tray stops for outer side

M601-SL

Series M601-ES End/Side Loading Roller Pallet Assembly

STANDARD DESIGN FEATURES

- All stainless steel construction
- 11 gauge tubing for heavy duty use
- (5) Rows rota-rollers for easy transfer, utilizing both the front or side of the pallet

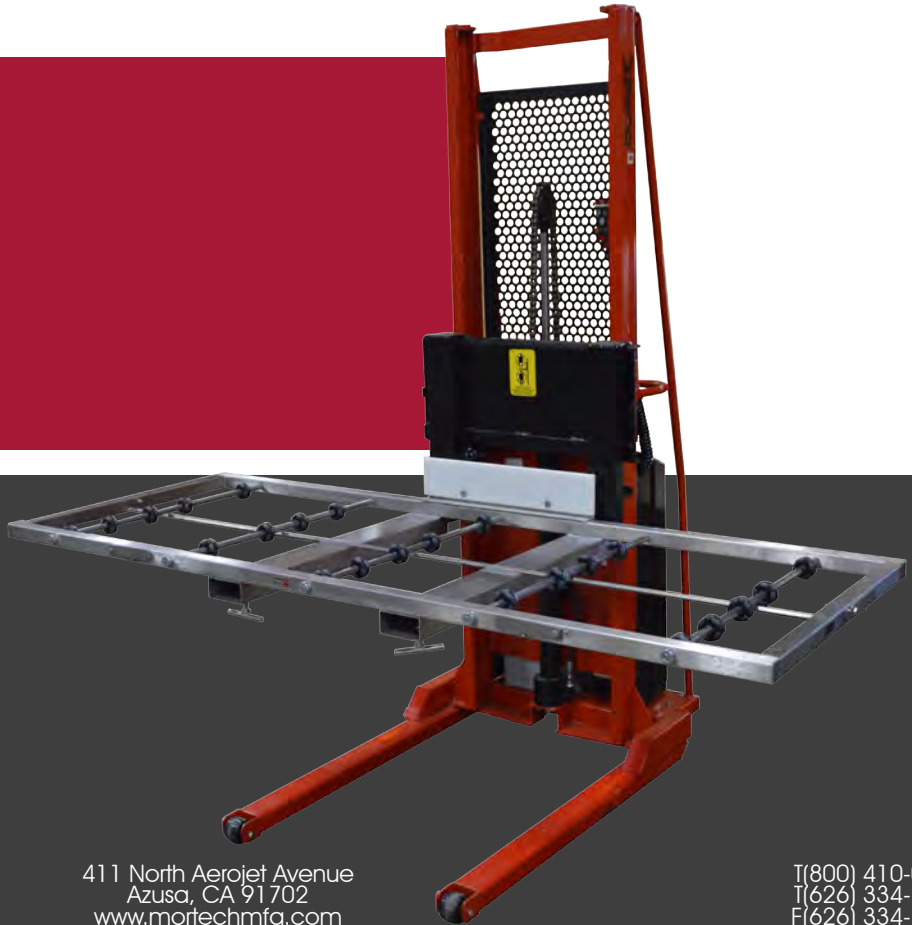

411 North Aerojet Avenue
Azusa, CA 91702
www.mortechmfg.com

T(800) 410-0100
T(626) 334-1471
F(626) 334-1704

Series M678 w/M604-H
Strap Tray Lift Assembly

MODEL M677 w/M604-C
Strap Tray Lift Assembly

Series M678 w/M605-H
Strap Body Lift Assembly

Model M604
Strap Tray Lift Assembly

STANDARD DESIGN FEATURES

- All stainless steel construction
- .120 thick tubing for heavy duty use
- (4) Sturdy strap supports
- Straps attach easily to T3626HS
- Fits any of our cadaver lifts

Model M605
Strap Body Lift Assembly

STANDARD DESIGN FEATURES

- All stainless steel construction
- .120 thick tubing for heavy duty use
- (4) adjustable nylon straps
- Straps slide easily under body
- Fits any of our cadaver lifts

M604 M605

MODEL M604, M605
CADAVER LIFT ACCESSORIES

T(800) 410-0100
T(626) 334-1471
F(626) 334-1704

411 North Aerojet Avenue
Azusa, CA 91702
www.mortechmfg.com

3277
power requirements on page 4 (highligted)

MORTECH™
MANUFACTURING INC.
ISO 9001:2008 CERTIFIED COMPANY

Technical Users' Manual
Installation and Operating Instructions

M678 BATTERY OPERATED HYDRAULIC CADAVER LIFT w/M600 ROLLER & M601 PALLET ASSEMBLIES

CAUTION
• Inspect unit and all components for any loosening that may have occurred during shipping •

ATTENTION
Review entire manual before starting assembly

ATTENTION
All images and Drawing in this manual may not represent your model. Refer to your particular project for exact specifications

WARNING
Biohazard Label is place on the equipment signifying the potentially infectiousness due to the samples or reagents

Mortech™ Manufacturing Inc.
[illegible] Rojet Avenue, Azusa, CA 91702
(626) 334-1471 www.mortechmfg.com

JUNE 14, 2019

JUNE 2013
ISO Doc. #0MM678-M600-M601 (REV C)

It is important that the information provided in this manual is observed. These instructions should be read carefully and observed fully before installation and initial operation.

WARNING

It is crucial that any work performed on Mortech Manufacturing Inc. manufactured items are carried out exclusively by skilled professionals who have the respective training. Improper use, maintenance, parts and service, or modification to the equipment may cause injury and/or damage. Use and maintain the equipment only for the purpose described in this manual. Use only Mortech Manufacturing Inc. prescribed approved parts and service. Use the equipment only as designed by Mortech Manufacturing Inc.

BLOODBORNE DISEASE NOTICE

To reduce the risk of exposure to bloodborne diseases such as HIV-1 and hepatitis when using the equipment, follow the disinfecting and cleaning instructions in this manual.

RECOMMENDED OPERATING SKILLS AND TRAINING

- SKILLS

Operators using the equipment need:

❑ A working knowledge of necessary procedures.

❑ The ability to carry out necessary service procedures.

❑ A complete understanding of the procedures described in this manual.

- TRAINING

❑ Read the this manual as prescribed

❑ Be trained on the use of the equipment.

❑ Practice with the equipment before using it in regular service.

❑ Be tested on their understanding of the equipment operation.

❑ Record their training.

BEFORE USING THE EQUIPMENT

Personnel working with this equipment needs to read this manual. Assemble of the unit following set instructions, and perform any pre-service checks to confirm the units operates properly.

INSPECTING THE UNIT BEFORE USE

Please take time to inspect all shipment prior to signing delivery ticket. If concealed damage is discovered, save the carton and immediately contact carrier agent to initiate claim of damage.

! BE SURE TO CHECK

- Are all components present?
- Do the moving parts operate smoothly?
- Is unit draining properly?
- Are all nuts, bolts, and pins secured in place?
  If unit has an issue contact Mortech Manufacturing Inc.

INSTRUCTION FOR HANDLING

Adhere to state and/or local certification and regulations for operation of forklift and/or pallet jack. Cargo is extremely heavy, be sure to have the necessary manpower as well as equipment to successfully unload shipment from transport. We recommend a forklift and/or pallet jack with the capacity to lift up to 2000 lbs. to remove cargo from transport.

The forklift can be used to unload receiving products safely by placing the load on the floor, maneuvering the forklift into position, tilting the mast forward to vertical position so the load will be level, lowering the load, and smoothly backing away without dragging. Once cargo is unloaded, positioning equipment for installation will once again require a forklift. Read all manual and note on installation of the unit before attempting installing.

The pallet jack can be used (with a loading dock and maneuverability on and off the transport vehicle) to unload receiving products safely. Maneuvering the pallet jack into position (in the appropriate position within the pallet), lifting the pallet then driving the pallet jack off the transport and safely into the place of installation.

Range of Environmental Condition

Mortech Manufacturing. Inc. equipment shall be placed in a controlled environment (housing or housed unit) hindering the weathering effects on the installed units. The equipment will have minimal corrosive and eroding factors that can break down the stability and operation of Mortech Manufacturing Inc. equipment. The impact on the equipment by the operator utilizing water or corrosives in the medical procedures can be controlled and responsibility for the cleaning and maintenance placed upon that person. The effects of anthropogenic (man-made) gasses on the environment, such as carbon dioxide (CO2) that will be omitted from the unit should be minimal.

Due to continuous innovation and product development this installation guide is subject to change without notice.

Please save these instructions for later use.

POWER LIFT STACKER

Operating Instructions and Parts Manual

ATTENTION: To Ensure proper use of your Power Lift Stacker, read these instructions thoroughly before using. it is important that all personnel, involved with the installation, maintenance or operation of the stacker, read the manual.

SPECIFICATIONS

See nameplate on unit for capacity, load center, model number and truck serial number.

This product is manufactured by:

WESCO Industrial Products, Inc.
P.O. Box 47
Lansdale, PA 19446
Tel: (215) 699-7031
FAX: (215) 699-3868

Contact the factory if you have start up problems after reading these instructions, for parts information and parts ordering.

UNPACKING

When unpacking your unit, check carefully for shipping damage. If damage has occurred, file a claim with the delivery carrier within 24 hours and notify the dealer for whom the unit was purchased.

START-UP

1. Remove the plastic cover by removing the for hex bolts, two on the top and one on each side (Fig-1).

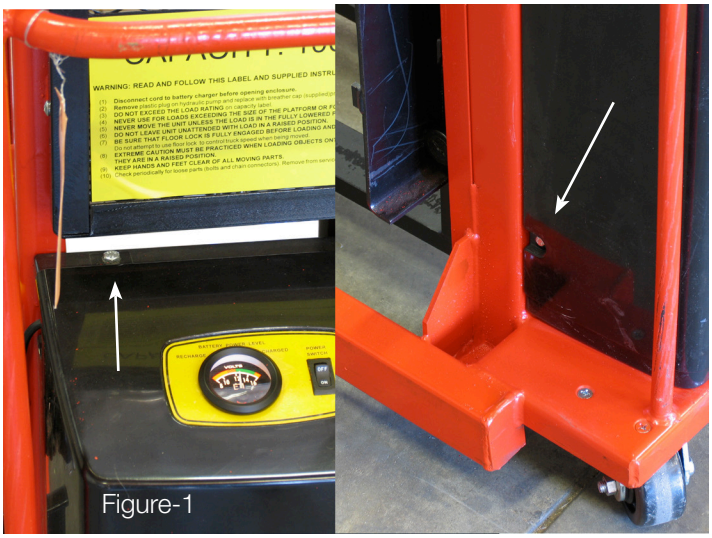

Figure-1

Then disconnect the switch and gage at the plastic connector (Fig-2)

2. check for signs of damage, especially to the back cabinet that houses the battery, electrical/hydraulic power pack.
3. Remove plastic pipe plug from oil reservoir, screw in breather cap.
4. Connect negative (black) wire to negative battery terminal.
5. Check all electrical connections for tightness.
6. Run unit up and down and check for any hydraulic oil leaks.
7. Do not use the lift if there appears to be any damage.

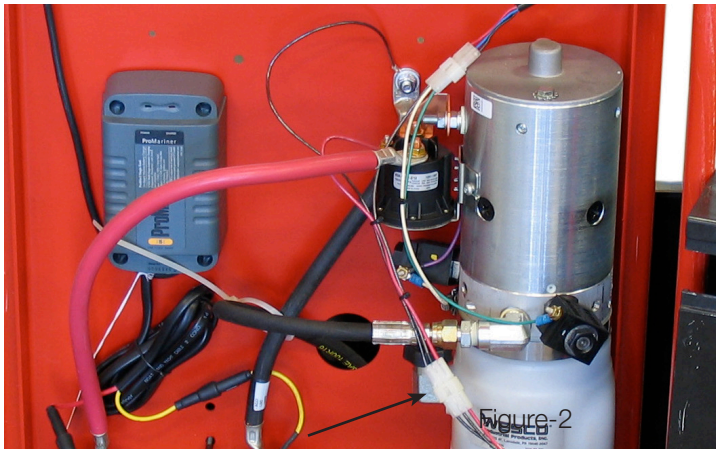

Figure-2

8. Reinstall plastic cover.

GENERAL SAFETY INFORMATION

WARNING Power Lift Stackers are intended for a wide range of uses. To ensure proper use, the following instructions must be adhered to:

1. Load rating- The capacity of your unit is shown on a metal tag attached to the truck. It is based on the load center also shown on the tag.
2. Do not use your unit for loads exceeding the size of the platform or forks.
3. Never move unit unless the load is in the fully lowered position.
4. Power lift Stackers are intended for movement of loads and lifting of loads to work position, not for moving of loads in a raised position.
5. The floor lock is designed for minimizing movement of unit during loading and unloading items from the unit themselves. It is not to be used to control truck sped when being moved. Be sure that lock is fully engaged before loading and unloading.
6. Do not perform any repair work on lift if there is a load on the forks or platform is raised.
7. All personnel must stand clear of the lift while lifting or lowering .
8. Do not stand, sit or climb on the lift or use lift to lift personnel.
9. Do not put hands or feet or stand underneath the forks or platform when raised.
10. Do not use lift on soft, uneven or unstable surfaces.
11. Custom alterations of unit for specific functions not made at the factory void all warranties without exceptions. User made alteration may result in unsafe conditions during use of unit.

OPERATIONS

Operating Instructions

1. Place power switch to ON position.
2. To raise lift, push UP button and hand control pendant.
3. To lower lift, push DOWN button.
4. Whenever the control button is released, the lift will stop.
5. Authorized operation should read and understand all instructions, precautions and warnings. Improper use of this lift truck could result in injury and/or damage to load and equipment.

-Use lift on hard level surfaces only.

-make sure load is evenly distributed, not loose or unstable, and as fa back on the platform or forks as possible.

DO NOT PICK UP LOADS ON TIPS OF FORKS OR EDGE OF PLATFORM.

-For fork models, adjust forks to the maximum practical width. Use two forks not one to pick uploads.

-Make sure travel, work are and overhead are clear of obstructions before lifting or moving loads.

-Make sure floor lock pad is in firm contact with floor before lifting or lowering load or using as a workstation.

6. Turn unit OFF when not in use, to prolong battery life.

(B) Daily Maintenance Checks:

WARNING- Battery should be recharged on a regular basis. Repeated total discharge of battery can result in battery failure.

1. Battery

Check charge level.
Check for corroded or loose terminals.
Visually inspect for any cracks or damage to to battery casing.
Check for loose battery tie downs.

2. Charger

Inspect wire connections.
check power cords for damage

3. Hydraulic system

Inspect pump and cylinder for oil leaks.
Check fluid level. Reservoir should be a minimum of one half full with a good grade of hydraulic oil.

DO NOT USE HYDRAULIC BRAKE FLUID.

Check hydraulic fittings and hoses.
Check piston rod for nicks/damage.

4. Frame assembly

Check floor lock.
Check safety screen and guard.
Check chain/roller assembly connections.
Check for any worn or damaged parts.

(C) Monthly Maintenance Checks

1. Battery

Clean battery compartment area.
Clean terminals.

2. Hydraulic system

Clean and inspect hydraulic cylinder.
Lubricate chain with a rust inhibitive chain lube.
Check chain tension with lift at its lowest height, chain could be tight enough so that it does not come off roller assembly.

3. Frame assembly

Clean and lubricate all roller bearings and cam followers.
Clean and inspect all welds.
Check wheels for wear and damage.
Inspect nameplate for legibility.

(D) Battery charging

1. Plug charging into a nominal 120 volt ground circuit outlet, charging will begin.

2. Battery will be fully charged when voltmeter indicates 12.0-13.4 volts, less than 12.0 volts battery is not fully charged.

3. When battery is fully charged unplug charger cord from electrical outlet.

DO NOT ATTEMPT TO MOVE STACKER WHEN CHARGING BATTERY!

4. The battery charger cord can be left plugged in for an indefinite period of time. The charger may be used any time to extend the operating time of the battery. You may have to wait until the battery is run down.

5. The voltmeter will indicate battery condition even when the charger cord is not plugged in.

Model 102
Folding Operating Table

The Model 102 Folding Operating Table is a true combination table, ideal for embalming, dressing and transferring. An exclusive, one-hand release easily adjusts either end of the table from 32½" to 38½" with the ends being independently adjustable. The table is constructed of a stainless steel top with a convex surface, tubular aluminum frame, and 6" wheels with ball bearings. The swivel wheels lock to keep the table stationary while in use. The drain, located in the center of the foot end, quickly eliminates fluid from the table. The Model 102 folds for storage when not in use and can stand on one end for storage behind a door or in a closet.

Model 102 Folding Operating Table ..... #0661020

Adjustable Height

Folds for Storage

38-BB Body Bridge
#0695790

Side Extension Panels (SEP)
SEP (each) #0695796

SPECIFICATIONS

	Length	Width	Height Max.	Height Min.	Wheelbase	Weight	Load Limit
Model 102	80"	30"	38¾"	32¾"	64"x27¼"	87 lb	1000 lb
	(205 cm)	(77 cm)	(98 cm)	(83 cm)	(163x69 cm)	(39½ kg)	(454 kg)

C-80BAJ-(AD)DS

Self-Contained Cubelet Ice Machine with Built-In Storage Bin

3305

Item #: 3305
Project: CNH/OSU
Qty: 5
AIA#: ADA MODEL #C-80BAJ-AD

W x D x H

C-80BAJ / C-80BAJ-DS
14 7/8" x 22 5/8" x 33 1/2"
Shipping Dimensions 20 3/4" x 30 1/2" x 40"

C-80BAJ-AD / C-80BAJ-ADDS
14 7/8" x 22 5/8" x 31 1/2"
Shipping Dimensions 20 3/4" x 30 1/2" x 38"

* not including handle

(-AD) - ADA Compliant

(-DS) - Customized Cabinet Door System

<<<NOTE: ADA MODEL IS 31.5" H

C-80BAJ
Air-Cooled
(Shown)

C-80BAJ-AD
Air-Cooled
ADA Compliant Unit

C-80BAJ-DS*
with Custom Cabinetry
(Shown)

C-80BAJ-ADDS*
Air-Cooled
ADA Compliant Unit
**Customer responsible for providing cabinetry*

Features

- **Full length stainless steel door handle**
- **UL approved for outdoor use**
- **Undercounter design**

- Up to 80 lbs. of ice production per 24 hours
- Up to 22 lbs. of built-in storage capacity
- Power switch accessible without panel removal
- Less than 34 inches tall (C-80BAJ, C-80BAJ-DS)
- Less than 32 inches tall; ADA Compliant (C-80BAJ-AD, C-80BAJ-ADDS)
- Easily disassembled water circuit for easy cleaning
- Front in and out airflow
- Equipped with 6 ft. Cord with NEMA 5-15 Plug
- R-134A Refrigerant

Warranty:
2 Year Parts & Labor on entire machine.
1 Year Parts & Labor on HS-5061 Drain Pump Assembly.
Valid in United States, Canada, Puerto Rico and U.S. Territories. Contact factory for warranty in other countries.

		ICE PRODUCTION		WATER USAGE		ELECTRICAL						
Condenser	Model	Air / Water Temp Lbs. per 24 hours 70°/ 50°F	90°/ 70°F	Potable Gal. per 100 lbs. 90°/ 70°F	Condenser Gal. per 100 lbs. 90°/ 70°F	kWh Used per 100 lbs. 90°/ 70°F	Max. Fuse Sz or HACR Circuit Bkr	Amperage	Voltage	Heat Rejection BTU/hr.	Refrigerant Charge Amount	Net / Ship Weight (lbs.)
Air	C-80BAJ(-DS)	80	45	12.0	N/A	17.3	15A	4.0A	115V/60/1	1,850	3.92 oz	118 / 130
Air	C-80BAJ-AD(-DS)	80	45	12.0	N/A	17.3	15A	4.0A	115V/60/1	1,850	3.92 oz	118 / 130

Mini Cubelet Dimensions*

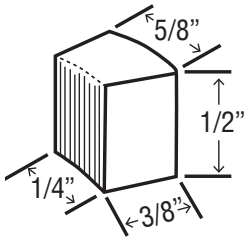

* approximate size in inches, image not to scale

Operating Limits

- Ambient Temp Range 45 - 100°F
- Water Temp Range 45 - 90°F
- Water Pressure 7 - 113 PSIG
- Voltage Range 104-127V

Service

- Allow enough clearance at rear for water and drain connections with 15" (38 cm) clearance in the front.
- Location must provide a firm and level foundation.
- Do not place near ovens, grills or other high heat producing equipment.

Parts

- Optional Side Trim Kit: HS-0182
- Optional Top Trim Kit: HS-2133
- Optioinal Drain Pump Assembly: HS-5061
- Water filter: H9320-51

Plumbing

- Icemaker Water Supply Line: Minimum 1/4" Nominal ID Copper Water Tubing or Equivalent
- Icemaker Drain Line: Minimum 1/2" Nominal ID Hard Pipe or Equivalent

Water Filter

Please refer to water filter spec sheet for recommended configurations.

Printed in the U.S.A. JUNE 14, 2019

Hoshizaki reserves the right to change specifications without notice.

C-80BAJ-(AD)DS

Self-Contained Cubelet Ice Machine with Built-In Storage Bin

3305

mm
[inch]

FRONT VIEW

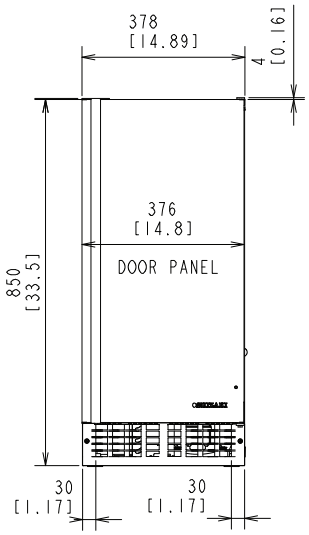

C-80BAJ*

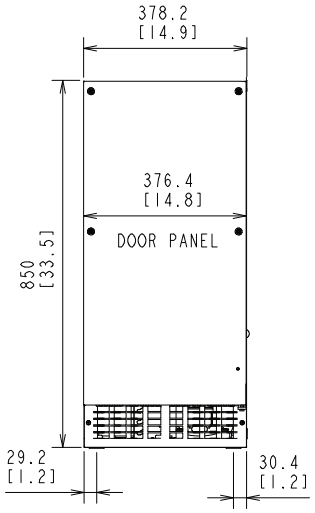

C-80BAJ-DS*

* -AD models have height ot 31.5”

REAR VIEW

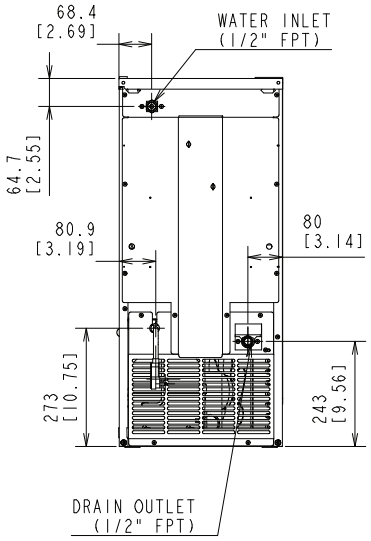

C-80BAJ(-DS)*

* -AD models have height ot 31.5”

SIDE VIEW

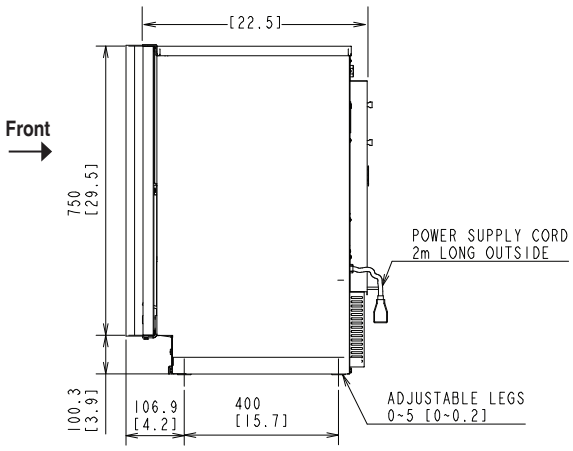

C-80BAJ*

* -AD models have height ot 31.5”

TOP VIEW

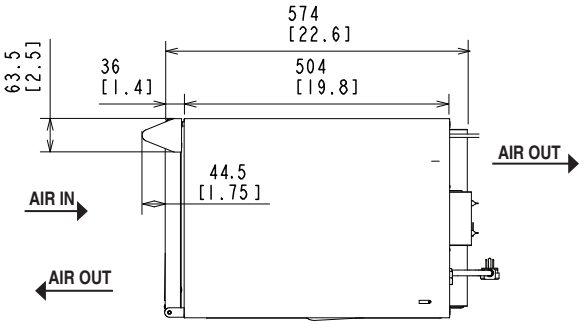

C-80BAJ*

JUNE 14, 2019

© HOSHIZAKI AMERICA, INC. 618 Hwy, 74 S., Peachtree City, GA 30269 | TEL 800-438-6087 | FAX 800-345-1325 | www.hoshizakiamerica.com

Printed in the U.S.A.

SUMMIT

AL54CSSTB

32" x 23.63" x 22.63" (H x W x D)

Built-in undercounter ADA compliant all-refrigerator with wrapped stainless steel exterior, towel bar handle, door storage, and digital controls

Highlights:

32" height fits under lower ADA compliant counters

Flexible design allows built-in or freestanding use in 24" wide spaces

Stainless steel wrapped cabinet and door with professional handle for a deluxe appearance with lasting durability

Product Features:

ADA compliant design	32" height allows easy installation under lower ADA compliant counters
Built-in capable	Front-breathing design lets you make the best use of space by installing your appliance under the counter
Wrapped stainless steel exterior	Cabinet and door feature stainless steel construction for a luxury look built to last
Professional towel bar handle	Curved handle in brushed stainless steel offers a sturdy grip with professional elegance
Factory installed lock	Keyed lock offers added security
Frost-free operation	No-frost operation for minimum user maintenance
Digital thermostat	Electronic controls located inside the unit for precise temperature management
Recessed LED light	Efficient and attractive presentation with LED lighting
Adjustable glass shelves	Rearrange refrigerator space to accommodate all sizes or remove shelves for simple cleanup

3310

SUMMIT

AL54CSSTB Specifications:

Overview	
Height of Cabinet	32.0" (81 cm)
Width	23.63" (60 cm)
Depth	22.63" (57 cm)
Capacity	4.8 cu.ft. (136 L)
Defrost Type	Frost-Free
Door	Stainless Steel
Cabinet	Stainless Steel
US Electrical Safety	ETL
Canadian Electrical Safety	ETL-C
Sanitation	ETL-S
Energy Usage/Year	250.0kWh/year
Amps	1.0
Voltage/Frequency	115 V AC/60 Hz
Weight	110.0 lbs. (50 kg)
Shipping Weight	115.0 lbs. (52 kg)
Parts & Labor Warranty	1 Year
Compressor Warranty	5 Years
Refrigerator Features	
Sabbath Mode	Yes
Door Swing	RHD
Reversible	Factory Reversible
Shelf Type	Glass
Shelf Qty	3
Full Door Shelf Qty	2
Adjustable Shelves	Yes
Thermostat Type	Digital
Fan Type	Interior and Exterior
Refrigerant Type	R600a
Refrigerant Amount	0.99oz.
High Side PSI	270.0
Low Side PSI	105.0
Level Legs Qty	4
Interior Light	Yes
Temperature Range	36 to 43ºF
Dimensions	
Interior Height	25.0" (64 cm)
Interior Width	20.0" (51 cm)
Interior Depth	17.5" (44 cm)
Compressor Step Height	3.25" (8 cm)
Compressor Step Width	20.0" (51 cm)
Compressor Step Depth	5.25" (13 cm)

Scotsman™

NME454 – 400 lb Nugget Ice Machine

NME454 – 400 lb Nugget Ice Machine

Modular Nugget Ice Machine with *AutoSentry*™

Shown on BH550S-C bin.

Key Advantages

AutoSentry™ Monitoring System constantly checks workload on gearbox shutting down system before a problem develops preventing costly repairs.

Electrical conductivity water sensor eliminates low or no water failures and cannot be affected by adverse water conditions.

Plastic drain pan with larger outlet provides greater ability to quickly channel water away preventing particulate build-up and rust.

Rust and restriction free drain system features one-piece plastic drain tubes with larger ID for obstruction-free water flow.

Durable, high grade stainless steel construction with massive, self-aligning spherical roller bearings; patented double-flight auger that evenly distributes the load; and heavy duty direct drive gearbox for high reliability and long life.

24 Hour Volume Production

Air Cooled		
70°F/21°C 50°F/10°C lb/kg	Air Water	90°F/32°C 70°F/21°C lb/kg
460/209		370/168

Water Cooled		
70°F/21°C 50°F/10°C lb/kg	Air Water	90°F/32°C 70°F/21°C lb/kg
510/232		420/191

Modular Bin Options

Model Number	Dimensions W" x D" x H"	ARI Certified Bin Capacity lb/kg	Application Capacity lb/kg	Finish	Ship Weight lb/kg
HTB250-H*	30 x 31.5 x 22.5	190/86	250/113	Poly	80/36
HTB350-H*	30 x 31.5 x 29.5	250/113	350/159	Poly	90/41
HTB555-H*	30 x 34.5 x 44.5	420/190	535/243	Poly	110/50
BH550S-C*	30 x 31.5 x 44	410/186	520/236	SS	140/64
BH801S-A*	42 x 31.5 x 44	580/263	740/336	SS	165/75
BH900S-C*	48.2 x 33.75 x 44	740/336	940/426	SS	200/91

*See price list for Bin Top.

Bin: HTB350-H

Bin: HTB555-H

Nugget Ice

The Original Chewable Ice™! Cools drinks rapidly without foaming. Used in fountain beverages.

Warranty

- 3 years parts and labor on all components.
- 5 years parts on the compressor.

Warranty valid in North, South & Central America. Contact factory for warranty in other regions.

Scotsman Ice Systems
775 Corporate Woods Parkway
Vernon Hills, IL 60061

1-800-SCOTSMAN
Fax: 847-913-9844
E-mail: customer.service@scotsman-ice.com

www.scotsman-ice.com

JUNE 14, 2019

Scotsman™
The Smart Choice in Ice.™

NME454 – 400 lb Nugget Ice Machine

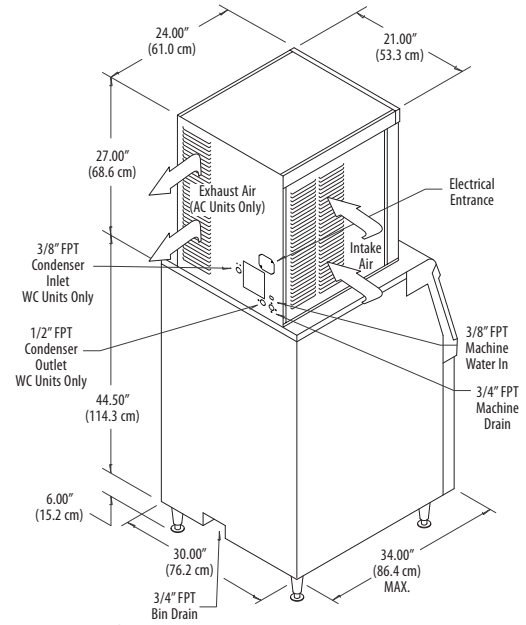

NME454 on HTB555-H bin.

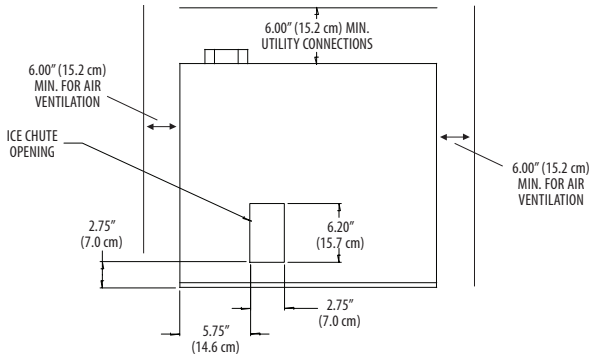

21″ Nugget plan view.

Specifications

Model Number	Condenser Unit	Basic Electrical Volts/Hz/Phase	Max. Fuse Size or HACR Circuit Breaker (amps)	Circuit Wires	Min. Circuit Ampacity	Energy Consumption kWh/100 lb (45.4 kg) 90˚F(32˚C)/70˚F(21˚C)	Water Usage Gallons/100 lb (liters/45.4 kg) Potable 90˚F(32˚C)/ 70˚F(21˚C)	Water Usage Gallons/100 lb (liters/45.4 kg) Condenser 90˚F(32˚C)/ 70˚F(21˚C)
NME454AS-1A	Air	115/60/1	20	2	15.75	5.2	12.0/45.5	-
NME454WS-1B	Water	115/60/1	20	2	14.35	4.2	12.0/45.5	71.2/269.8

All Models

Dimensions (W x D x H):

Unit:
21″ x 24″ x 27″
(53.3 x 61.0 x 68.6 cm)

Shipping Carton:
28″ x 25″ x 32″
(71.1 x 63.5 x 81.3 cm)

Shipping Weight:
205 lb/93 kg

BTUs per hour:
5,600

Accessories

Model Number	Description

* Scotsman recommends all ice machines have water filtration. See Scotsman Sanitation Matrix for details.

Operating Requirements

	Minimum	Maximum
Air Temperatures	50°F (10°C)	100°F (38°C)
Water Temperatures	40°F (4.4°C)	100°F (38°C)
Remote Cond. Temps	-20°F (-29°C)	120°F (49°C)
Water Pressures	20 PSIG (1.4 bar)	120 PSIG (8.3 bar)
Electrical Voltage	-5%	+10%

Specifications and design are subject to change without notice.

Scotsman Ice Systems
775 Corporate Woods Parkway
Vernon Hills, IL 60061

1-800-SCOTSMAN
Fax: 847-913-9844
E-mail: customer.service@scotsman-ice.com

www.scotsman-ice.com

Enodis

JUNE 14, 2019

© 2007 Scotsman Ice Systems.

SIS-SS-NUG-NME454
1M 02-07

B222S, B322S, B330P, B530P/S, B842S, B948S – Storage Bins

B222S, B322S, B330P, B530P/S, B842S, B948S - Storage Bins

Modular Storage Bins

B530S shown with optional KLP8S legs

Features

New sleek, contemporary styling. A perfect match to Prodigy cube ice machines and other Scotsman ice machines.

Convenient, built-in scoop holder.

Easily removable baffle, no tools required for cleaning.

Unique recessed drain fitting for maximum installation flexibility.

Spring loaded door with hidden hinges for easy opening and closing.

Available in stainless steel or durable rotocast plastic.

ARI, NSF approved.

Storage Capacity

B222S		B322S		B330P	
APPLICATION	ARI	APPLICATION	ARI	APPLICATION	ARI
242/110	190/86	370/168	290/132	344/156	270/123

B530P/S		B842S		B948S	
APPLICATION	ARI	APPLICATION	ARI	APPLICATION	ARI
536/244	420/191	778/353	610/277	893/406	700/319

Polyurethane Insulation

Foam insulation is forced between the wall and liner under heat and pressure to form a perfect wall to wall bond, preserving ice supply for long periods.

Bin Interior

The polyethylene bin interior is sanitary and easy to clean. Resists scratches and scuffs from ice scoops.

Warranty

- 3 years parts and labor on all components.

Warranty valid in North, South & Central America. Contact factory for warranty in other regions.

Scotsman Ice Systems
775 Corporate Woods Parkway
Vernon Hills, IL 60061

1-800-SCOTSMAN
Fax: 847-913-9844
E-mail: customer.service@scotsman-ice.com

www.scotsman-ice.com

JUNE 14, 2019

Scotsman
The Smart Choice in Ice.™

B222S, B322S, B330P, B530P/S, B842S, B948S - Storage Bins

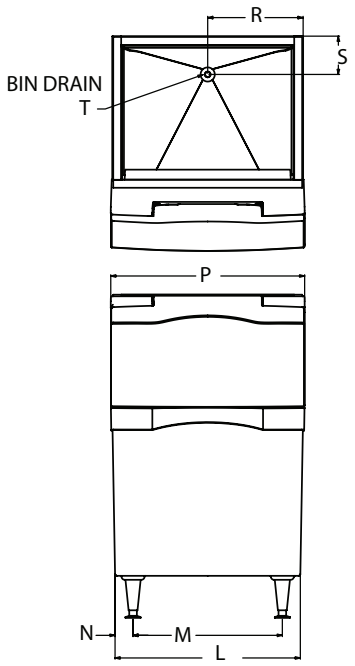

Installation Note: Allow 6" space at back for utility connections.

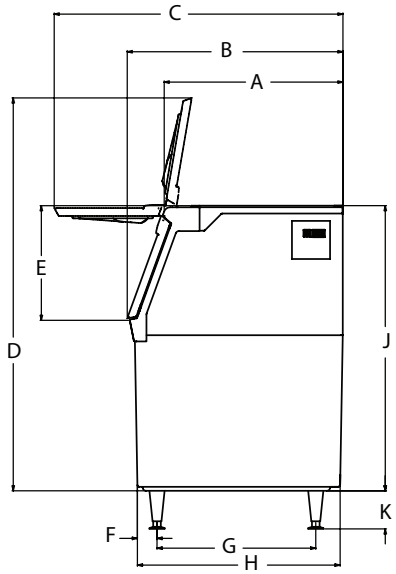

Dimensions

Model #	A	B	C	D	E	F	G	H	J	K	L	M	N	P	R	S	T
B222S	28.23	34	45.5	47.24	18	3.88	25	32.75	31	6	22	15.5	3.25	22.5	11	6	.75 NPT
B322S	28.23	34	45.5	61.24	18	3.88	25	32.75	44	6	22	15.5	3.25	22.5	11	6	.75 NPT
B330P	28.15	34	45.5	47.24	18	3.33	25	32.42	31	6	30	23.5	3.08	30.5	15	6	.75 NPT
B530P/S	28.15	34	45.5	61.24	18	3.09	25	31.93	45	6	30	23.5	2.83	30.5	15	6	.75 NPT
B842S	28.07	34	45.5	61.87	18	3.88	25	32.75	44	6	42	35.5	3.25	42.5	21	6	.75 NPT
B948S	28.05	34	45.5	61.24	18	3.88	25	32.75	44	6	48	41.5	3.25	48.5	24	6	.75 NPT

Finish: S = Stainless Steel, P = Poly

Shipping

Model #	Carton	Weight
B222S	24" x 36" x 35"	120
B322S	24" x 36" x 47"	140
B330P	32" x 36" x 33"	90
B530P/S	32" x 36" x 47"	110 / 150
B842S	44" x 36" x 47"	185
B948S	50" x 36" x 47"	220

Accessories

Model #	Description
KBC1	Kit, Bin Casters for B530S, B842S, B948S & SB380.* Not for use with B222S, B322S or SB480 when using extensions.
KBC1P	Kit, Bin Casters for B330P & B530P.*
KLP7	Kit, Legs, 6", Flanged Feet, For B Bins, HD Dispensers, AFE, CU1/2/3 & NSE.
KLP8S	Kit, legs, 6", Stainless Steel, For B Bins, HD Dispensers, AFE, CU1/2/3 & NSE.
BGS10	Bagger, Hooks on Any Bin.
KBAG	Kit, Bags, 1000, For BGS10.
KSEALER	Kit, Tape Sealer, For BGS10.
KTAPE	Kit, Tape, 180 ft. Roll, For BGS10.
KHOLDER	Kit, Scoop Holder, Stainless Steel.

* 3.5" Diameter, 2 Locking, Raises Bin 4.5".

Operating Requirements

	Minimum	Maximum
Air Temperatures	50°F (10°C)	100°F (38°C)
Water Temperatures	40°F (4.4°C)	100°F (38°C)
Remote Cond. Temps	-20°F (-29°C)	120°F (49°C)
Water Pressures	20 PSIG (1.4 bar)	80 PSIG (5.5 bar)
Electrical Voltage	-10%	+10%

Specifications and design are subject to change without notice.

Scotsman Ice Systems
775 Corporate Woods Parkway
Vernon Hills, IL 60061

1-800-SCOTSMAN
Fax: 847-913-9844
E-mail: customer.service@scotsman-ice.com

www.scotsman-ice.com

Enodis

JUNE 14, 2019

© 2008 Scotsman Ice Systems.

Imbera VRD43 HC BLACK

ESTABLISHING A **NEW STANDARD** IN THE COMMERCIAL REFRIGERATION INDUSTRY.

Energy efficient, environmentally friendly, featuring spark-free components, low refrigerant charge and the most attractive product display.

KEY FEATURES

• Eco-Friendly HC Natural Refrigerant
New R290 HFC-free refrigerant gas that reduces environmental impact and increases efficiency.

• Electronic Temperature Controller
Patented ETC1H electronic controller assures optimal refrigeration performance through precision temperature control, and intelligent control for defrost cycle, compressor & other component functions.

• Electronic Fan Motors
Enhances performance and efficiency. Uses only a fraction of the energy and offers longer life expectancy than industry standard shaded-pole motors.

• Newly Designed Condenser
New condenser featuring a joints reduction down to zero increasing long term refrigeration reliability and safeguarding against any system leaks.

• LED Efficiency +220 LUX Minimum Output
New 5th generation constant power ulta-high efficiency LED uses lowest energy possible, with highest light output.

• Spark-Free Refrigeration Components
All HC models will have spark free refrigeration components for optimal safety, per UL requirements.

CERTIFICATIONS

ENERGY STAR

c UL us LISTED
COMMERCIAL REFRIGERATOR AND/OR FREEZER
9Z42

CLASSIFIED UL EPH
NSF/ANSI 7 COMMERCIAL REFRIGERATOR AND/OR FREEZER
20YY

DOE 2017

JUNE 14, 2019

IMBERA FOODSERVICE | 1293 N. Post Oak Road, Suite 100, Houston, TX 77055
Ph: 678 - 504 - 6835 | **info@imberafoodservice.com**

Imbera® VRD43 HC BLACK

ESTABLISHING A **NEW STANDARD** IN THE COMMERCIAL REFRIGERATION INDUSTRY.

PRODUCT VIEWS

Dimensions rounded up to the nearest inch or millimeter. Specifications subject to change without notice.

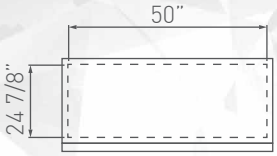

TOP VIEW

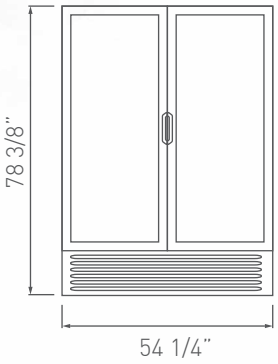

FRONT VIEW

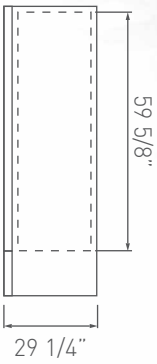

SIDE VIEW

EXTRA OPTIONS

Stainless Steel Door Frame Options available

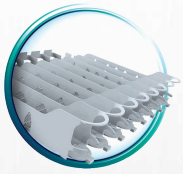

Interior merchandising options incluide gravity kits, Sandwich Trays and freezer baskets

Casters and Legs Available

Lock options with different capabilities available

Customer Service: 866-548-5770 | WWW.**IMBERAFOODSERVICE**.COM

Three year limited warranty is included on all parts and labor. An additional two year warranty is issued on the compressor (USA & Canada only).

Operators must follow installation and operational guidelines per Imbera Users Manual and each cooler must have its own power supply, or warranty will be void.

JUNE 14, 2019

TECHNICAL SPECIFICATIONS

Exterior Dimensions			Interior Dimensions		
H:	78 5/8"	1997 mm	H:	59 5/8"	1515mm
W:	54 1/8"	1375 mm	W:	50"	1270 mm
D:	29 3/4"	756 mm	D:	24 7/8"	633 mm

Usable Interior Capacity			Usable Volume
H:	53 1/4"	1355 mm	41.66 ft³
W:	50"	1270 mm	1180 lts
D:	24 7/8"	633 mm	

Capacity 20 oz. Bottle	Doors	Doors Construction
Flat: 560	2	Standard Black Plastic Frame

Shelves	Shelf Size & Guage		
	W:	24 1/4"	615 mm
10	**D:**	19 3/4"	501 mm

REFRIGERATION PERFORMANCE DATA

Refrigerant R290	Energy Consumption
3.52 oz	3.290 kWh/day*

Compressor Power	Condenser
3/4 HP	Finless

Evaporator	Thermostat Setting Default	Cut-Out	Cut-In
Dynamic		32°F (0°C)	44.6°F (7°C)

Noise
54.50 dB

ELECTRICAL DATA

Power Supply	AMPS	Cord Length	Lighting
115v 60 Hz	8.7 kWh/day	118" 3000mm	411.80 Lux output 18 modules 8 LED per module

Plug Type	Controller
PC-731	Imbera ETC1H controller Pre-programmed temperatures

LOGISTIC DATA

Trailer Loads		Unit Weight w/packaging	Dimensions w/packaging		
53':	30	501.8 Lbs	H:	82 1/2"	2097 mm
40':	24	227.6 kg	W:	56 1/2"	1432 mm
			D:	31 3/8"	798 mm

*Energy consumption based on ANSI/ASHRAE Standard 72-2005.

BMAD System (Low maintenance high performance).
Dimensions rounded up to the nearest inch or millimeter.
Specifications subject to change without notice.

VALPRO COMMERCIAL REFRIGERATION
5256 Eagle Trail Drive
Tampa, FL 33634
813-502-0300
Toll Free 1-888-VALPRO-8
www.ValproRefrigeration.com
sales@ValproRefrigeration.com

PROJECT:	
MODEL #:	
ITEM #:	QTY:
AVAILABLE W/H:	
APPROVAL:	

GLASS DOOR MERCHANDISER

MODEL: VP1F-23

SWING DOOR FREEZER

Valpro glass door merchandisers can be manufactured to your specifications with options for black or white exterior, slide or swing doors, custom illuminated sign panels and side wall decals. Our line of merchandisers utilize reliable energy efficient technology and provide an attractive well illuminated point of purchase while maintaining precise temperatures. All units feature an oversized balanced refrigeration system allowing rapid cooling, and better reliability. All our merchandisers are UL Energy Verified and deliver the lowest operating costs. All Valpro products are manufactured under strict ISO9001 standards for quality assurance, and to consistently deliver to our customers products that satisfy all expectations. All our products are operated, extensively monitored, and undergo rigorous inspection prior to packaging and shipping.

FEATURES

- Energy saving vacuum-insulated triple pane low E-glass door
- Bright LED full door length internal cabinet lighting
- Bright LED back-lit front panel
- Standard door locks for added security
- Self-closing door
- Snap-in magnetic door gaskets removable and replaceable without tools for ease of cleaning
- Powder coated steel exterior and interior
- Stainless Steel interior bottom
- Four heavy duty wire shelves supported by pilasters for easy adjustability', 1/2" increments
- Four 1" wheels with front leg levelers
- High density foamed in-place CFC free polyurethane insulation
- Front mounted electronic thermostat digitally controlled temperature system maintains optimum temperature with easily viewed LED display
- Removable bottom grill slide-out condensing unit for easy maintenance
- Self contained oversized balanced refrigeration system provides better reliability and performance
- UL Energy Verified and tested to NSF Standard 7

WARRANTY
2 YEAR Parts & Labor
5 YEAR Compressor

CLASSIFIED c UL us
CLASSIFIED UL EPH
NSF CERTIFIED TO ANSI/NSF 7
UL Energy Verified

Model:

VP1F-23

Glass Door Merchandiser Freezer

One Section - Swing Door - 23 cu. ft. Capacity

Technical Data

Dimensional Data

Exterior Dimensions	26.8”W x 31.9”D x 79.5”H
Interior Dimensions	23”W x 30”D x 55.5”H
Net Storage Capacity	23 cu. ft.
Net Weight	302 lbs.
Crated Weight	352 lbs.
Shipping Dimensions	28.3”W x 34.8”D x 84.6”H

Refrigeration Data

Temperature Range	-10°F to +10°F
Refrigerant	R-404A
Refrigerating System	Capillary Tube
Temperature Controller	Digital
Horsepower	5/8

Construction Data

Exterior Material	Powder Coated Steel
Interior Floor Material	304 Series Stainless Steel
Interior Wall Material	White Powder Coated Steel
Insulation	CFC Free Polyurethane
Shelves	4 Heavy Duty Epoxy Coated

Electrical Data

Amps	11
Voltage/Frequency/Phase	115V/60Hz/1
Plug Type	NEMA 5-15P
Electrical Cord Length	10 ft.

FRONT VIEW

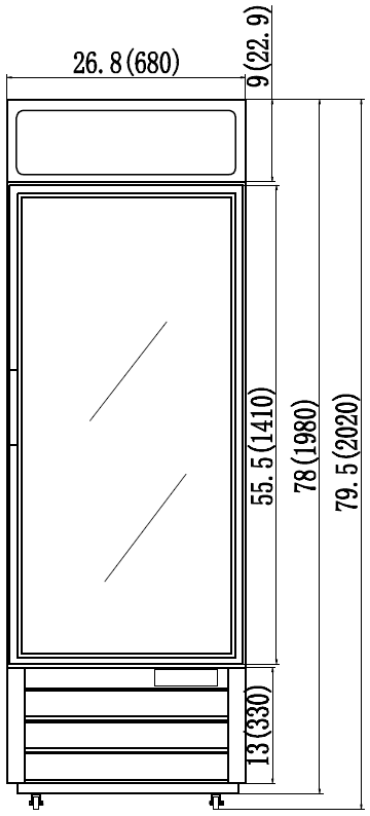

SIDE VIEW

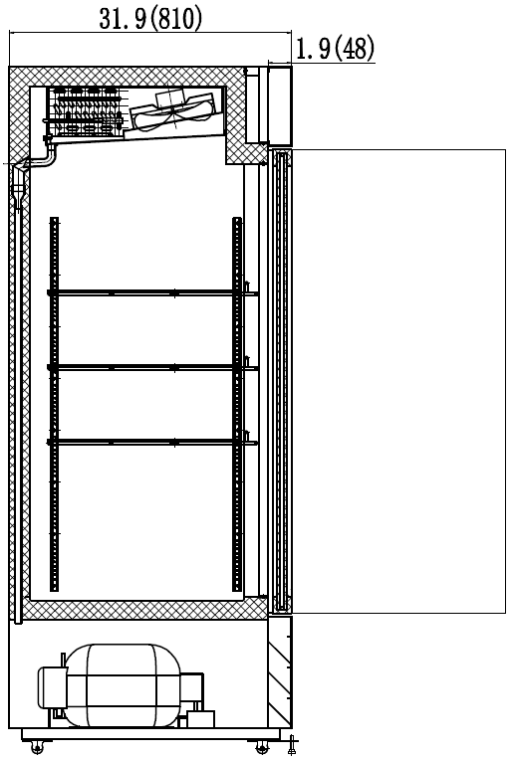

Valpro Commercial Refrigeration
5256 Eagle Trail Drive
Tampa, FL 33634

Tel: 813-502-0300
1-888-VALPRO-8
www.valprorefrigeration.com

Profile™

JES2251SJ – GE Profile™ 2.2 Cu. Ft. Capacity Countertop Microwave Oven

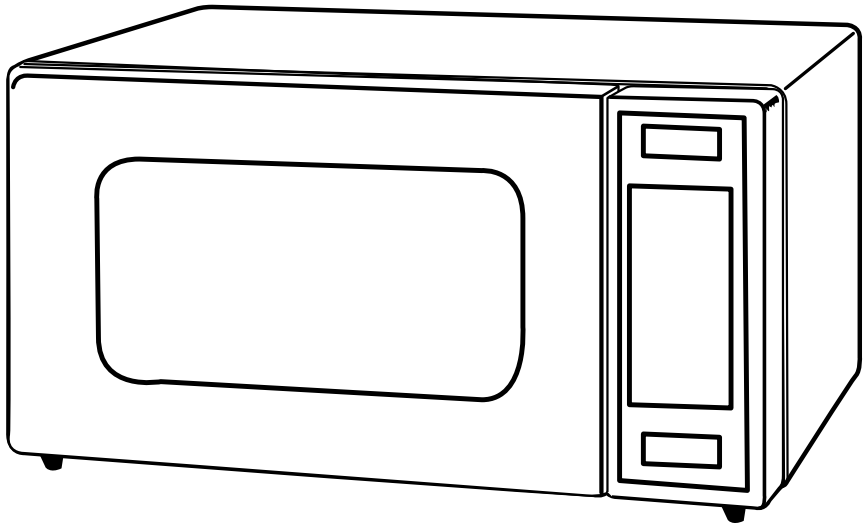

This unit designed to be placed on countertop.

Exterior Dimensions* (in inches)	
W x H x D	24-1/11 x 13-25/32 x 19-13/32

*Height includes feet.

Listed by Underwriters Laboratories

For answers to your Monogram,® GE Profile™ or GE® appliance questions, visit our website at ge.com or call GE Answer Center® service, 800.626.2000.

Specification Revised 1/10
240370

Profile™

JES2251SJ – GE Profile™ 2.2 Cu. Ft. Capacity Countertop Microwave Oven

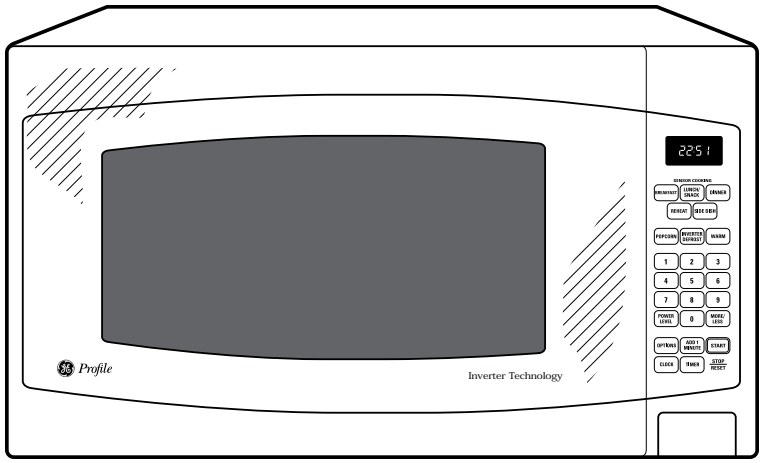

Features and Benefits

- 2.2 cu. ft. capacity – 1200 watts (IEC-705 test procedure)
- Inverter Technology – Consistent heat helps prevent overcooked edges and surfaces
- Sensor cooking controls – Automatically adjust the time and power for perfect cooking results
- Auto and Time Defrost – Automatically defrosts for a specified amount of time
- Turntable – Continually rotates food to ensure even cooking
- Child lock out – Enables you to lock the keypad to prevent the oven from being accidentally started
- Instant On Controls – Allow quick, one-touch cooking and reheating
- Model JES2251SJ – Stainless steel

Specification Revised 1/10
240370

3352a

24" Pocket Handle Dishwasher

500 Series DLX – Stainless Steel SHP865WD5N

BOSCH
Invented for life

SHP865WD5N
Stainless Steel

Also available in:

White	SHP865WD2N
Black	SHP865WD6N

The flexible 3rd rack allows you to accommodate deeper items, while adjustable tines let you customize the rack's loading space.

Features & Benefits

- 44 dBA: Quietest dishwasher brand in the US.
- A flexible 3rd rack with fold down sides adds 30% more loading area.
- The pocket handle seamlessly integrates into your kitchen & installs flush.
- EasyGlide™ rack provides a smooth glide for easier loading & unloading.
- FlexSpace™ Tines fold back to fit your larger pots & pans.

General Properties	
Number of wash cycles	5
Number of options	5
dBA	44
Third rack	Flexible 3rd Rack
Rack adjustability	Rackmatic®
Tub material	Stainless Steel
Control type	Buttons
Concealed heating element	Yes
Leak protection system	24/7 AquaStop®
Water softener	No
Five-level wash	Yes
ChildLock	No
Special features	InfoLight®, Extra Dry Option

Efficiency	
Water usage per cycle	2.9
Energy efficiency class	Tier 1
ENERGY STAR® qualified	Yes
Total annual energy consumption (kWh)	269
Total annual water consumption (g)	623.5

Capacity	
Number of place settings	16

Technical Details	
Watts (W)	1440 W
Current (A)	12 Amps
Volts (V)	120 V
Frequency (Hz)	60 Hz
Power cord length	N/A
Minimum water pressure (lb/sin)	14
Length outlet hose (in)	79"

Dimensions & Weight	
Overall appliance dimensions (HxWxD) (in)	33 7/8" x 23 9/16" x 23 3/4"
Required cutout size (HxWxD) (in)	33 7/8" x 23 5/8" x 24"
Adjustable feet	Yes
Net weight (lbs)	91 lbs

Accessories—Optional	
Drain Hose Extension Kit	SGZ1010UC
Dishwasher Accessory Kit	SMZ5000
Anti-Tarnish Silverware Cassette	SMZ5002UC
Powercord with Cold Plug	SMZPC002UC

For help and assistance with Bosch accessories please visit: www.bosch-eshop.com/eshop/bosch/us or call 1-800-944-2904 Mon-Fri 5am to 6pm PST Sat 6am to 3pm PST

Notes: All height, width and depth dimensions are shown in inches. BSH reserves the absolute and unrestricted right to change product materials and specifications, at any time, without notice. Consult the product's installation instructions for final dimensional data and other details prior to making cutout. Applicable product warranty can be found in accompanying product literature or you may contact your account manager for further details.

Warranties: Bosch warrants that the Product is free from defects in materials and workmanship for a period of three hundred and sixty-five (365) days from the date of purchase. The foregoing timeline begins to run upon the date of purchase, and shall not be stalled, tolled, extended, or suspended, for any reason whatsoever. This Product is also warranted to be free from cosmetic defects in material and workmanship (such as scratches of stainless steel, paint/porcelain blemishes, chip, dents, or other damage) to the finish of the Product, for a period of thirty (30) days from the date of purchase or closing date for new construction. This cosmetic warranty excludes slight color variations due to inherent differences in painted and porcelain parts, as well as differences caused by kitchen lighting, product location, or other similar factors. This cosmetic warranty specifically excludes any display, floor, "As Is", or "B" stock appliances.

For more information on our entire line of products, go to www.bosch-home.com/us or call 1-800-944-2904

JUNE 14, 2019

© BSH Home Appliances Corporation. All rights reserved. Bosch is a registered trademark of Robert Bosch GmbH.

3352a

24" Pocket Handle Dishwasher

500 Series DLX – Stainless Steel SHP865WD5N

BOSCH
Invented for life

Installation Details

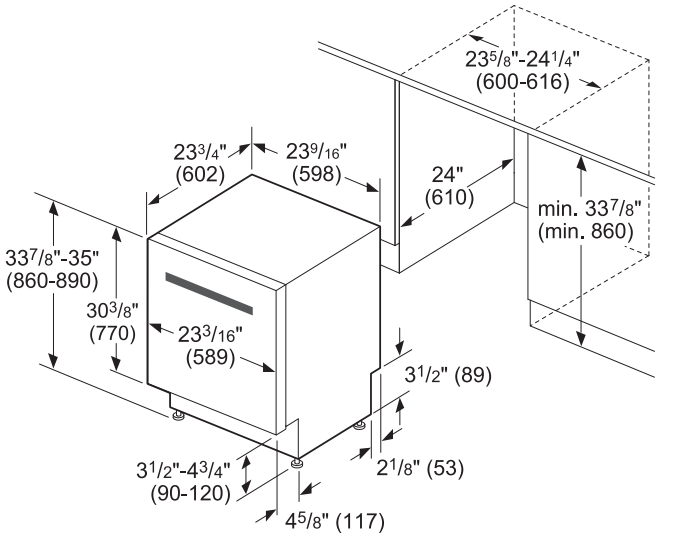

measurements in inches (mm)

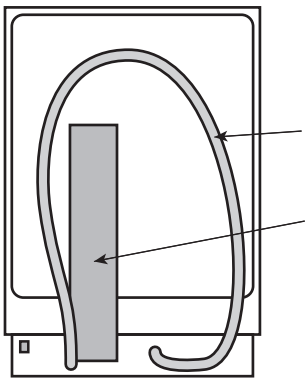

Included:

Pre-connected drain hose

Toe-kick

Power cord with junction box

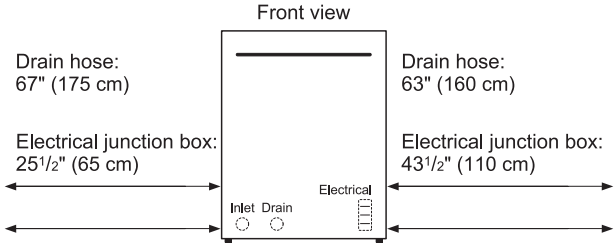

All connections are at the rear of the appliance.
Extension for drain hose available as accessory.
Power cord for connection to electrical outlet (3-prong plug) available as accessory.

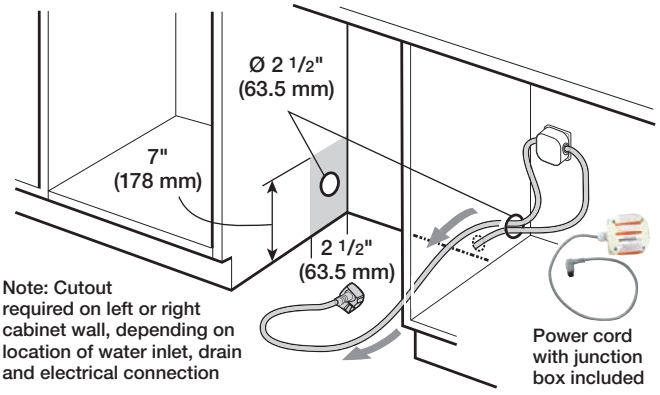

Example of Hardwire Installation

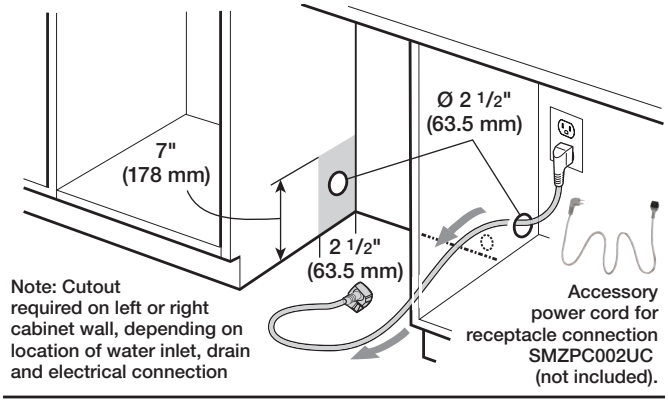

Example of an Electrical Receptacle Installation

For help and assistance with Bosch accessories please visit: www.bosch-eshop.com/eshop/bosch/us or call 1-800-944-2904 Mon-Fri 5am to 6pm PST Sat 6am to 3pm PST

Notes: All height, width and depth dimensions are shown in inches. BSH reserves the absolute and unrestricted right to change product materials and specifications, at any time, without notice. Consult the product's installation instructions for final dimensional data and other details prior to making cutout. Applicable product warranty can be found in accompanying product literature or you may contact your account manager for further details.

Warranties: Bosch warrants that the Product is free from defects in materials and workmanship for a period of three hundred and sixty-five (365) days from the date of purchase. The foregoing timeline begins to run upon the date of purchase, and shall not be stalled, tolled, extended, or suspended, for any reason whatsoever. This Product is also warranted to be free from cosmetic defects in material and workmanship (such as scratches of stainless steel, paint/porcelain blemishes, chip, dents, or other damage) to the finish of the Product, for a period of thirty (30) days from the date of purchase or closing date for new construction. This cosmetic warranty excludes slight color variations due to inherent differences in painted and porcelain parts, as well as differences caused by kitchen lighting, product location, or other similar factors. This cosmetic warranty specifically excludes any display, floor, "As Is", or "B" stock appliances.

For more information on our entire line of products, go to www.bosch-home.com/us or call 1-800-944-2904

© BSH Home Appliances Corporation. All rights reserved. Bosch is a registered trademark of Robert Bosch GmbH.

3352a

24" Pocket Handle Dishwasher

500 Series DLX – Stainless Steel SHP865WD5N

BOSCH
Invented for life

Installation Details

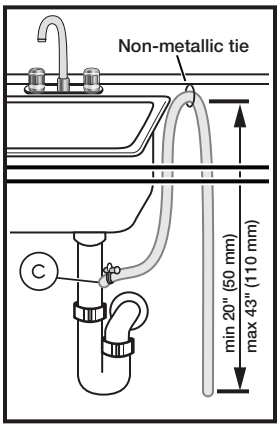

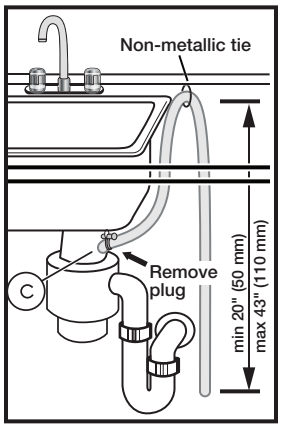

Note: Plumbing installations will vary - refer to local codes. Drain hose included is 79 (201 cm) and can be extended to a maximum of 155 3/4" (396 cm).

Always use the approved drain hose extension kit (SGZ1010UC).

Ensure a portion of the drain hose is raised between min. 20" (50 cm) and max. 43" (110 cm) above the cabinet floor.

For help and assistance with Bosch accessories please visit: www.bosch-eshop.com/eshop/bosch/us or call 1-800-944-2904 Mon-Fri 5am to 6pm PST Sat 6am to 3pm PST

Notes: All height, width and depth dimensions are shown in inches. BSH reserves the absolute and unrestricted right to change product materials and specifications, at any time, without notice. Consult the product's installation instructions for final dimensional data and other details prior to making cutout. Applicable product warranty can be found in accompanying product literature or you may contact your account manager for further details.

Warranties: Bosch warrants that the Product is free from defects in materials and workmanship for a period of three hundred and sixty-five (365) days from the date of purchase. The foregoing timeline begins to run upon the date of purchase, and shall not be stalled, tolled, extended, or suspended, for any reason whatsoever. This Product is also warranted to be free from cosmetic defects in material and workmanship (such as scratches of stainless steel, paint/porcelain blemishes, chip, dents, or other damage) to the finish of the Product, for a period of thirty (30) days from the date of purchase or closing date for new construction. This cosmetic warranty excludes slight color variations due to inherent differences in painted and porcelain parts, as well as differences caused by kitchen lighting, product location, or other similar factors. This cosmetic warranty specifically excludes any display, floor, "As Is", or "B" stock appliances.

For more information on our entire line of products, go to www.bosch-home.com/us or call 1-800-944-2904

© BSH Home Appliances Corporation. All rights reserved. Bosch is a registered trademark of Robert Bosch GmbH.

3355 DRINK VENDING MACHINE
MODEL DZF 3000 IS FOR AN ALL DRINK UNIT

Number One In Quality

SZF/DZF

VARIABLE TEMP GLASSFRONT VENDOR

MODELS:

3207/3207A – SZF/DZF 3000 (3 WIDE)

3208/3208A – SZF/DZF 5000 (5 WIDE)

SERVICE MANUAL

FEB 2007 **P/N 4214792 • D**

SPECIFICATIONS

DIMENSIONS & WEIGHT

TYPE	SZF/DZF3000 (3 WIDE)		SZF/DZF5000 (5 WIDE)	
MODEL	3207	3207A	3208	3208A
WIDTH	29.5 in. (74.9 cm)		41.2 in. (104.6 cm)	
DEPTH	38 in. (96.5 cm)			
HEIGHT	72 in. (182.9 cm)			
ESTIMATED WEIGHT[1]	693 lbs (614 kg)		816 lbs (370 kg)	
EST. SHIPPING WT.[1]	722 lbs (327 kg)		846 lbs (384 kg)	

Note: [1] Weights will vary depending on tray configuration and optional equipment installed.

ELECTRICAL

MODEL		Panasonic Super 1/3 Hp		Danfoss 1/2 Hp	
VOLTAGE		115 VAC	230 VAC	115 VAC	230 VAC
CYCLE		60 Hz	50 Hz	60 Hz	50 Hz
NOMINAL AMPS	HEATED GLASS	8.0 Amps	4.0 Amps	10.5 Amps	5.2 Amps
	NON HEATED GLASS	7.0 Amps	3.5 Amps	9.5 Amps	4.8 Amps
TRANSFORMER		110/24 VAC	230/24 VAC	110/24 VAC	230/24 VAC

REFRIGERATION

HORSEPOWER	Panasonic Super 1/3 Hp	Danfoss 1/2 Hp
TYPE	Hermetically Sealed	Hermetically Sealed
CONTROLS	Electronic	Electronic
REFRIGERANT	R-134a	R-134a
CHARGE	20 oz	16 oz

COIN CHANGER, BILL VALIDATOR, CARD READER

TYPE	Any MDB Peripheral Device

VENDOR OPERATION

LOCATION	Suitable for indoor use only
RECOMMENDED OPERATING TEMPERATURE	Between 32° and 100° Fahrenheit (0° and 38° Celsius)

Your Configured Ricoh MP C6004

*Note: The image is a photo realistic illustration of your selected configuration.

DIMENSIONS

WIDTH	DEPTH	HEIGHT
58.70in	**27.00in**	**47.60in**
(1,491mm)	(686mm)	(1,209mm)

Actual dimensions may vary. These are approximate only.

POWER CONSUMPTION (MAIN UNIT)

120V-127V, 60Hz

Additional power requirements may apply.

Please read each option's description copy to see if additional power sources are needed.

Your Chosen Options

- MP C6004
- Paper Feed Unit PB3160
- LCIT RT3030
- Finisher SR3210
- Bridge Unit BU3070
- Punch Unit PU3050 NA
- PostScript3 Unit Type M19
- Fax Option Type M20

Main Unit

Main Unit

Item/Description	Item #	Power Requirements
MP C6004	417453	120V-127V, 60Hz

Paper Tray & Optional Accessories

Item/Description	Item #	Power Requirements
Paper Feed Unit PB3160	416544	N/A
LCIT RT3030	416548	N/A

Output & Finishing Options

External

Item/Description	Item #	Power Requirements
Finisher SR3210	417483	N/A
Bridge Unit BU3070	417587	N/A

Hole-Punching

Item/Description	Item #	Power Requirements
Punch Unit PU3050 NA	416609	N/A

Print/Scan Options

Network Environment

Item/Description	Item #	Power Requirements
PostScript3 Unit Type M19	417504	N/A

Fax Options

Item/Description	Item #	Power Requirements
Fax Option Type M20	417531	N/A

Main Unit

Main Unit

Item/Description	Item #	Thumbnail
MP C6004 • Output Speed (Letter): 60-ppm • Average Monthly Volume: 15,000 impressions/month • Maximum Monthly Volume: 50,000 impressions/month • Power Requirements: 120V-127V, 60Hz • Weight: 228 lbs. (103.4 kg) • W × D × H (inches): 23.1 × 27 × 37.9 • W × D × H (mm): 586.74 × 685.8 × 962.66 Note: 1. The standard DataOverwriteSecurity System (DOSS) included with the mainframe is not ISO 15408 certified. 2. The DOSS does not overwrite the HDD for the Color Controller E-23C. 3. MP C6004 cannot be installed with Internal Finisher SR3130.	417453	

Paper Tray & Optional Accessories

Item/Description	Item #	Thumbnail
Paper Feed Unit PB3160 Provides an additional 1,100 sheets. Paper Sizes up to 12" x 18". Paper Weights up to 80 lb. Bond/166 lb. Index (300 g/m^2). Weight: 48.5 lbs. (22 kg) W × D × H (inches): 23.1 × 27 × 9.7 W × D × H (mm): 586.74 × 685.8 × 246.38 Note: Paper Feed Unit PB3160 cannot be installed with Paper Feed Unit PB3150, Caster Table Type M3, Paper Feed LCIT PB3230, Cabinet Type F, or any related options.	416544	

LCIT RT3030 Provides an additional 1,500 sheets. Paper Sizes up to 8.5" x 11"/A4. Paper Weights up to 80 lb. Bond/166 lb. Index (300 g/m^2). Weight: 21.6 lbs. (9.8 kg) W × D × H (inches): 13.4 × 21.4 × 11.4 W × D × H (mm): 340.36 × 543.56 × 289.56 Note: 1. LCIT RT3030 cannot be installed with any of these Paper Bank options: Paper Feed Unit PB3150, Caster Table Type M3, or Cabinet Type F. 2. LCIT RT3030 must be configured with either the Paper Feed Unit PB3160 or PB3230.	416548	

Output & Finishing Options

External

Item/Description	Item #	Thumbnail
Finisher SR3210 1,000-sheet Finisher. For offices that produce collated and stapled sets of documents, the SR3210 helps shorten production time. It offers 50-sheet, multi-position stapling, mixed sized stapling, optional hole-punching, and shift-sort collating, as well as a staple-less binding capability of up to 5 sheets. Supports Paper Sizes up to 12" x 18". Weight: 60 lbs. (27 kg) W × D × H (inches): 22.2 × 24.4 × 37.8 W × D × H (mm): 563.88 × 619.76 × 960.12 Note: 1. By choosing this option, the Bridge Unit BU3070 will be added to your configuration. 2. One of the following Paper Feed Units must be selected to add this finisher: Paper Feed Unit PB3160, Paper Feed LCIT PB3230, or Cabinet Type F. 3. Finisher SR3210 cannot be installed with these options: Paper Feed Unit PB3150, Caster Table Type M3, Internal Shift Tray SH3070, Internal Finisher SR3130, Finisher SR3230, Booklet Finisher SR3220, Booklet Finisher SR3240, or any related options.	417483	

Item/Description	Item #	Thumbnail
Bridge Unit BU3070 A required accessory when the main unit is configured with an external finisher. The Bridge Unit transports pages from the standard exit area into a Finisher for online stapling or hole-punching. Note: One of the following finishers must be selected to add this option: Finisher SR3210, Finisher SR3230, Booklet Finisher SR3220, or Booklet Finisher SR3240.	417587	

Hole-Punching

Item/Description	Item #	Thumbnail
Punch Unit PU3050 NA Optional hole punching for the Finisher SR3210 or Booklet Finisher SR3220. Supports Paper Sizes up to 11" x 17". Note: 1. Finisher SR3210 or Booklet Finisher SR3220 must be selected to add this option. 2. Punch Unit PU3050 NA cannot be installed with the Internal Finisher SR3130, Finisher SR3230, or Booklet Finisher SR3240.	416609	

Print/Scan Options

Network Environment

Item/Description	Item #	Thumbnail
PostScript3 Unit Type M19 Recommended for printing more complex color and PDF files. Note: PostScript3 Unit Type M19 cannot be installed with Color Controller E-23C or any related options.	417504	Adobe® PostScript® 3™

Fax Options

Item/Description	Item #	Thumbnail
Fax Option Type M20 Installation required to enable fax services: 33.6 kbps, approximately 2 second transmission speed, standard JBIG, and standard 320 Pages Memory. Includes standard Internet Fax (T.37), LAN Fax, IP-Fax (T.38), Fax Forwarding to Email & Paperless Fax function.	417531	

3763

POWERSHRED® 125Ci

Professional Cross Cut Shredder with 100% Jam Proof System For 3-5 users

- 100% Jam Proof eliminates paper jams and powers through tough jobs
- SilentShred® Technology minimises disruption in shared work spaces
- SafeSense® Technology immediately stops shredding when hands touch the paper entry
- Energy savings system reduces in-use energy consumption and powers down after 2 minutes of inactivity
- Extended runtime of 45 minutes for high volume shredding
- Sleek, modern design
- Shreds 18 sheets of A4 paper per pass into 3.9 x 38mm cross cut particles
- Shreds credit cards, staples, paperclips and CDs
- 49L pull-out bin for easy emptying
- 2 year full warranty/ 20 year cutter warranty

Unique features

SPECIFICATIONS

Model Name	Sheet Capacity	Cut Type	Cut Size / mm	Throat width	Security Level	Bin Capacity	Run Time	Also Shreds	Warranty
125Ci	18	Cross-Cut	3.9 x 38	230	DIN 3	49 L	30-45 mins		2/20 yr

3763

POWERSHRED® 125Ci

Unique Features

How the 100% Jam Proof System works:

The shredder electronically measures paper thickness to prevent jams
Watch the light bar while you shred:

- Green-Yellow = within shredder capabilities
- Red = overfeeding, remove excess paper to continue

If a misfeed occurs our 100% Jam Proof System will power through it!

100% JAM PROOF

100% Jam Proof eliminates paper jams and powers through tough jobs

SilentShred™ Performance

SilentShred® Technology minimises disruption in shared work spaces

SAFE SENSE TECHNOLOGY

SafeSense® Technology immediately stops shredding when hands touch the paper entry

ENERGY savings system

Energy savings system reduces in-use energy consumption and powers down after 2 min of inactivity

LOGISTICS

Model Name	Country version	Item Number	Retail Barcode	Outer Barcode	Product Dim (mm)	Product Weight (kg)	Outer Dim (mm)	Outer Weight (kg)
125Ci	EU UK CH ZA	4612001 4612101 4612701 4612601	043859628032 043859628049 043859632237 043859628094	50043859628037 50043859628044 50043859632232 50043859628099	732 x 280 x 520	26.74	845 x 400 x 645	29.84

3764

POWERSHRED® 225 Series

Commercial Shredder

100% JAM PROOF

Advanced Jam Prevention

Eliminates paper jams and powers through tough jobs

SilentShred™ Performance

Ultra-Quiet
Offers ultra-quiet performance for shared workspaces

ENERGY™ savings system

Energy Saving
Reduces energy consumption by up to 70%*

SAFE SENSE TECHNOLOGY

Advanced Safety
Stops shredding when hands touch the paper opening

Specifications

Model #	225Ci	225i
Item	3825001	3322001
Sheets/Pass	20	20
Cut Type	Cross-Cut	Strip-Cut
Security	Level 3	Level 2
Cut Size	5/32" x 1½"	7/32"
Users	3-5	
Max Run Time	Continuous	
Bin Capacity	16 Gallons	
Bin Type	Removable Basket	
Throat Width	9.5"	
Dimensions	38.5"H x 17.4"W x 17.75"D	
Also Shreds		
Warranty	2-year product and service plus lifetime on cutters	

*Compared to conventional commercial shredders during normal usage

3765

COMMERCIAL CROSS CUT SHREDDER 35 GALLON CAPACITY

Description

Destroy documents, credit cards and CDs with this Fellowes Powershred 425Ci 100 percent jam-proof cross-cut shredder. Dispose of sensitive material with this cross-cut shredder. With the ability to run continuously without the need for cooling, this shredder destroys up to 30 sheets of paper in a single pass for efficient processing. The patented Jam Proof System easily handles paper clips, CDs and credit cards to accommodate the toughest jobs, and SafeSense technology ensures this shredder disables when hands touch the paper opening, providing added safety and protection. This Fellowes Powershred cross-cut shredder has a 30-gallon bin to accommodate high-volume shredding, and the LED full-bin indicator light eliminates frequent emptying.

- Commercial cross-cut shredder is designed for busy professionals
- Shreds credit cards, staples, paper clips, CDs/DVDs, and paper up to 30 sheets at 20' per minute
- Measures 37.3"H x 22"W x 20"D
- Equipped with Jam Proof System
- Includes wastebasket bin with 30 gal. capacity
- Shredder provides sufficient security (Level P-4)
- Bin full indicator simplifies emptying
- SafeSense technology stops shredder when hands touch the paper opening
- SilentShred offers ultra-quiet shredder performance for shared workspaces
- 2-year manufacturer limited warranty; limited lifetime warranty on cutter

Shreds 28 sheets per pass into 5/32” x 1-1/8” cross-cut particles (Security Level P-4) with an extra wide 12" Throat Width

SOURCE: https://www.quill.com/fellowes-powershred-425ci-30-sheet-cross-cut-commercial-shredder-38425/cbs/014105.html?cm_mmc=CSE_MSN_TECH_RLSA_014105&mcode=CSE_MSN_TECH_RLSA_014105&gclid=COmO0cHf2OECFQnfDQodDHkMBw&gclsrc=ds

pitney bowes

Shipping & Mailing

SendPro® C200

Make the smart sending choice every time.

Eliminate guesswork with our all-in-one solution.

The SendPro C200 is the simplest, all-in-one technology for office mailing and package shipping. It's a complete sending solution that makes it easy to process mail and send packages all from one place. You'll be able to:

- Process daily mail and print postage quickly and accurately.
- Save on postage and get access to special discounts.
- Compare options from three major carriers, like USPS and UPS®.
- Print shipping labels for three carriers right from the system.
- Track packages and costs across three major carriers in one consolidated report.

Plus, with the integrated scale you can accurately calculate postage and shipping charges for all of your letters, flats and packages. The C200 makes it easy for your office to consistently choose the ideal mailing or shipping option.

Save money and eliminate overspend.

Using a color touchscreen display, the C200 makes your selections of carrier, class and services simple and accurate. For letter mail, simply select the postal class and services you want, then seal and print postage in one easy step. For larger items, you can compare each carrier's shipping options and print a shipping label. Plus, the C200 is digitally connected so you'll always be up-to-date with automatic postal and carrier updates, low ink alerts, service warnings and diagnostic notifications.

*Actual savings may vary depending on weight, zone and services requested.

For more information, visit us online: pitneybowes.com/us/sendpro-c-series

Make the confident choice, no matter what you send.

With the SendPro® C200, you can consistently choose the ideal carrier, class or service to get your items delivered—all at the best price for your needs. Just weigh the item to see your carrier's options with a cost and estimated delivery time. A common address book works across all three carriers and verifies the recipient addresses to ensure accurate delivery. Then, after selecting the ideal choice for your unique business needs, the C200 will print a shipping label from the attached label printer.

Ship and track from anywhere.

Access C200's shipping and tracking capabilities away from your mail area with secure access from your desktop computer. You'll always have a consolidated view of your cost history and tracking information for carrier shipments. By having multiple information on a single platform, the C200 eliminates having to use multiple carriers' websites to process a package or track a shipment.

Maximize savings every time you send.

The C200 is designed to save you and your office staff time and money in many ways. You can get automatic ink replenishments at savings of 20% off the retail price when you enroll in the AutoInk™ program. When shipping, you immediately save with USPS® shipping discounts for Priority Mail and other package services. As a certified Ready Provider of UPS®, Pitney Bowes offers savings on UPS Next Day Air® and UPS Ground Commercial and Residential.

Specifications

User display	Color touchscreen
Envelope processing	Up to 40 letters per minute; semi-automatic feeding
Envelope moistener	Standard
Integrated scale	Standard: Up to 5 lbs.
External scale	Optional
USPS retail rates and extra services	Standard; No Presort rate option
Electronic return receipt	Not available—use standard USPS return receipt
USPS shipping (Commercial Base Pricing)	Standard
Multi-carrier shipping	Optional; Use existing business account (UPS and other carrier)
Multi-user access	Optional
Shipping label printer (4" x 6")	Optional; Compliant to USPS and alternate carriers
Label and report printing	Optional: Laser printer for reports
Cost accounting	Optional: 25 accounts, and INVIEW™ Analytics web access
Connectivity	Standard: LAN (wired) or Wi-Fi (wireless)
Envelope sizes	Up to 3/8" thickness. Media sizes: 3" x 5" up to 13" x 15"
Differential weighing	Optional
Electrical and approvals	100 – 120 VAC, 50/60 Hz, 1.0A
Dimensions	16 1/2" L x 15 1/2" D x 11 1/2" H (with integrated scale)

For more information, visit us online: pitneybowes.com/us/sendpro-c-series

pitney bowes

United States
3001 Summer Street
Stamford, CT 06926-0700

RECYCLE PLEASE
recycleplease.org

Pitney Bowes, the Corporate logo, SendPro and AutoInk are trademarks of Pitney Bowes Inc. or a subsidiary.
All other trademarks are the property of their respective owners. © 2017-2018 Pitney Bowes Inc. All rights reserved.

18SMB06973_US

3769

GBC® Ultima® 35 EZload® Thermal Roll Laminator, 12" Max. Width, 1 Min Warm-Up

1701680

Each information

Depth	20.875"
Width	21.875"
Height	15.375"
Gross weight	39.8lbs
UPC#	033816054516
Unit quantity	1

Case information

Depth	20.88"
Width	21.88"
Height	15.38"
Gross weight	39.8lbs
UPC#	033816054516
Unit quantity	1

Shipping Information

Country of origin	CN
Minimum Order Quantity	1
Lowest possible unit	Each

General information

Color	120 VOLT
Layer/Pallet	3
Cases/Layer	2

Product Description

Ultima 35 desktop roll laminator delivers high quality results and features EZload technology. EZload roll film is made to ensure correct loading.

Features

- Thermal roll laminating machine with EZload technology eliminates film loading mistakes
- Compatible with 1.7 to 5 mil 12" width EZload roll film
- Fast 1 minute warm-up time
- Fixed 39" per minute laminating speed
- Laminates documents up to 11.75" wide. Leaves a small lamination film border.
- Built-in trimmer, reverse and auto shut off functions
- Limited 2-year warranty
- 18.11" x 11.14" x 16.92"

Specifications

- **Period of Warranty** Limited 2-year
- **Warranty Group** N/A
- **Speed Settings** Fixed
- **Thickness (mil)** Up to 10 mil
- **Warm-up time (minutes)** 1

Other information

- **Dimensions** 18.11" x 11.14" x 16.92"
- **Power Requirements** 120V - 60Hz 7A

midmark™

6211 Secure Laptop Workstation

- **Capacity**
  20 lb max weight.

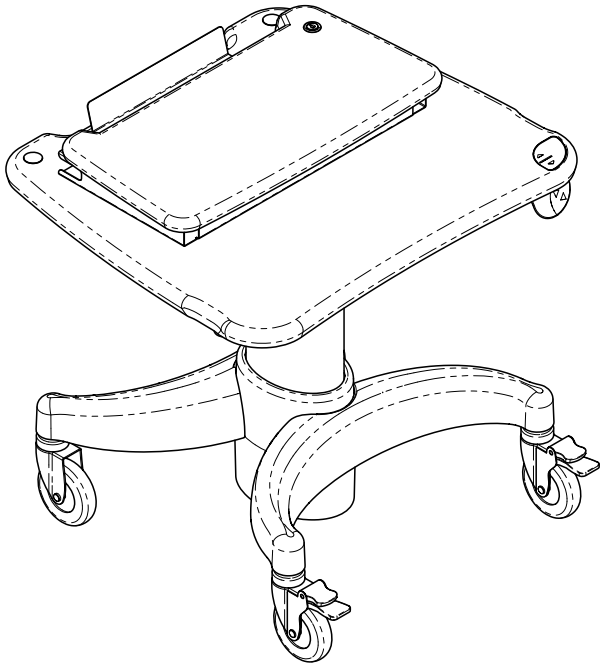

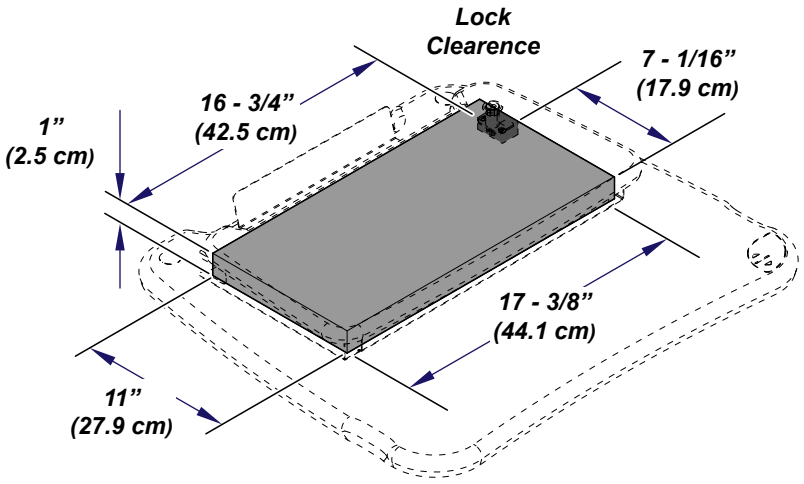

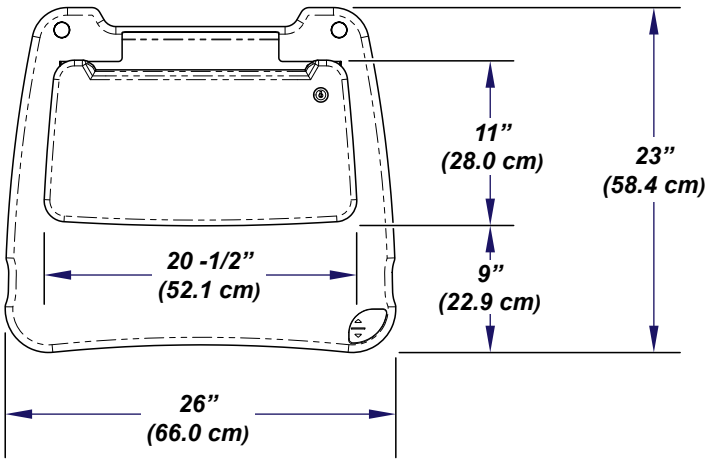

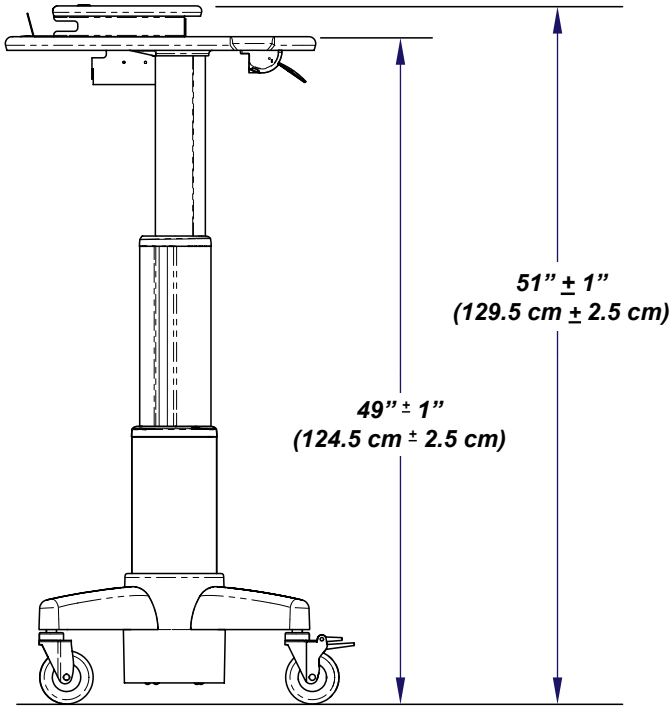

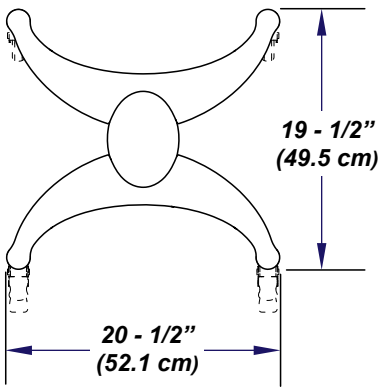

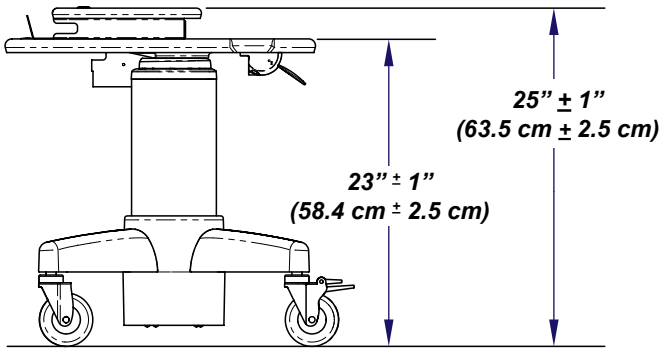

MA11101i

© 2018 Midmark Corporation | 60 Vista Drive Versailles, OH 45380 USA | 1-800-643-6275 | 1-937-526-3662 | midmark.com

3904a

NOTE: REQUIRES STRONG WALL BACKING

Standard Duty Wall Mounted Workstation

Healthcare is changing. Are you changing with it?

The MIDMARK® Standard Duty Wall Mounted Workstation is industry leading with over 22” of height adjustments. It is ergonomically designed to be comfortable in a seated or standing position.

FEATURES & BENEFITS:

1. **Monitor Adjustments**
   9.5” of height adjustment, 45° of tilt and 180° of rotation with the quick connect VESA for portrait to landscape viewing
2. **Keyboard Height Adjustment**
   22” of keyboard height adjustment
3. **Workstation**
   Upper level work surface for papers and small technology
4. **Compact Design**
   Stores just 9.47” off the wall with the tray flipped up, perfect for high traffic areas, hallways or patient rooms
5. **Cable Management**
   Integrated wire management system in the mounting arm for neat and quick wire installation
6. **Wall Track**
   Available in 34” length for direct to drywall applications optimizing locations with limited space
7. Compliant with TAA regulations
8. Compliant with RoHS regulations

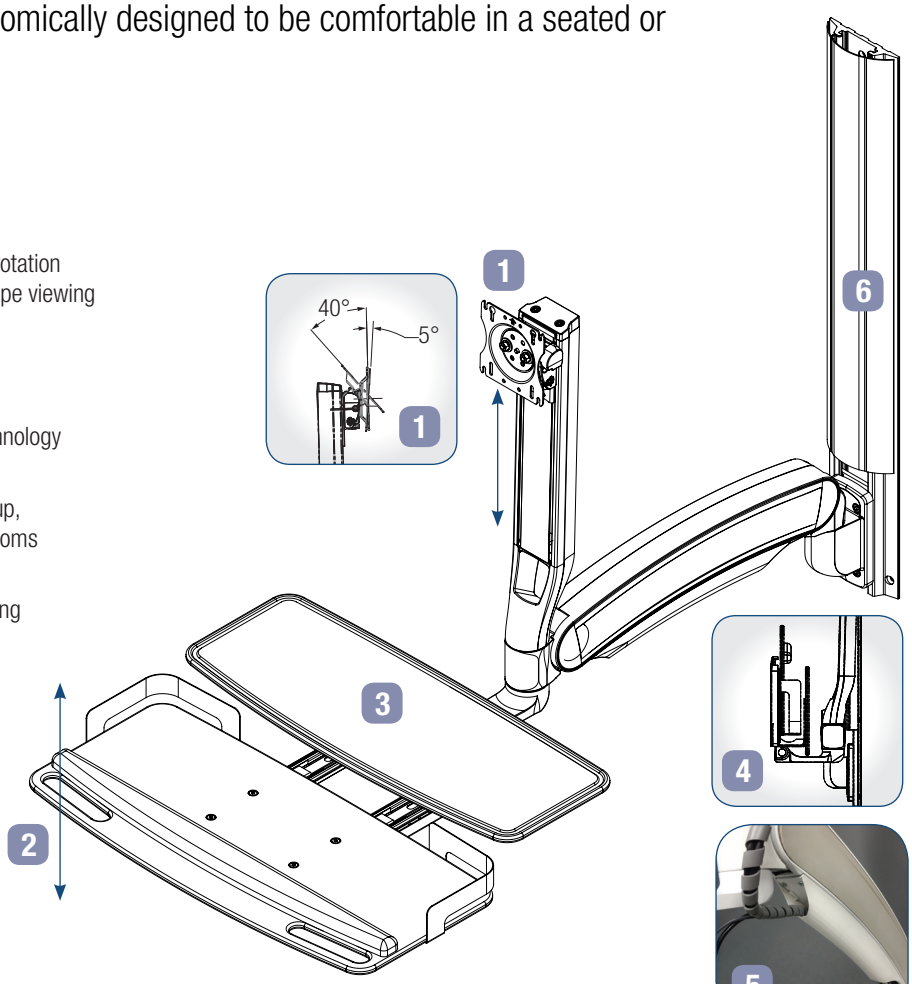

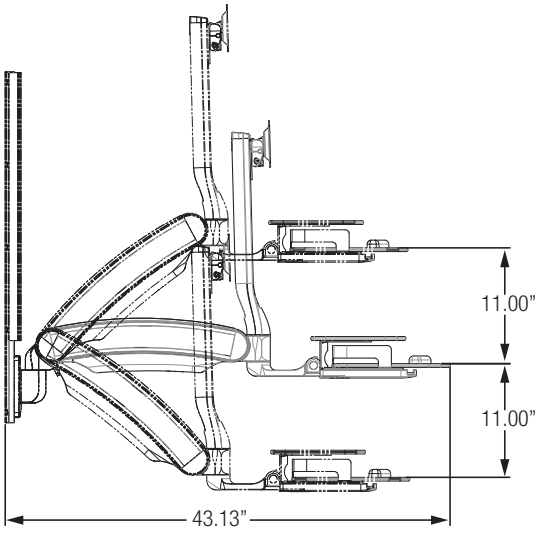

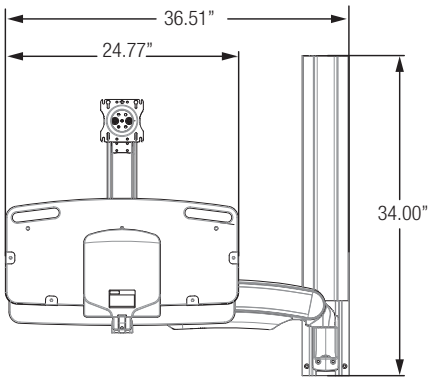

Model	Description	OPM#	Tray Width	Tray Depth	Tray Height	Weight Capacity	Mounting Standard
6282	Standard Duty Wall Mounted Workstation	0217-013	25”	10”	2.1”	5-20 lbs.	VESA 75mm/100mm

JUNE 14, 2019

3909

Standalone Kiosk

For iPad, Windows & Android

Easily share & interact with your visitors.

Built from steel and unbreakable thermoplastics, our Standalone model is made to secure tablets for public use.

This freestanding kiosk features a stable, non-tip base and a large, lockable body with plenty of room for accessories and branding.

Standard Features

- Radio-transparent tablet enclosure is scratch and fingerprint-resistant.
- Powdercoated for a durable, professional finish.
- Restricts access to tablet buttons while still allowing private access without disassembly.
- Tablet can be displayed in either landscape or portrait mode.
- Secondary cable exit through the base of the kiosk for hidden AC power supply and a cordless appearance.
- Designed to meet ADA compliance.

Options

- Home button and/or camera access
- Custom powdercoat color
- Can be bolted to floor
- Wheel stand base
- Branding panels
- Vinyl body wrap
- Printer, card reader, and barcode scanner integration

Dimensions

	iPad 2 - Air 2	iPad Pro	10" Android & Windows	12" Android & Windows
w	19"	19"	19"	19"
d	16.5"	16.5"	16.5"	16.5"
h	46.5"	48.5"	47.6"	48"
wt	51 lb.	53.4 lb.	50.2 lb.	52.1 lb.

3909

Specifications

iPadKiosks.com
iOS • Windows • Android

info@kioskgroup.com
(301) 732-4629

Supported Tablets

- iPad 2, 3 and 4
- iPad Air & Air 2
- iPad Pro
- Surface Pro 2 & 3
- Samsung Galaxy
- Any tablet

Accessories

- Keyboard attachment
- Headphone hook
- Audible alarm system
- Screen protector
- Brochure holder
- Signature stylus
- Remote low-voltage power
- External battery backup
- Magnetic stripe card reader shell
- Thermal printer cabinet
- Flight case

Supported Peripherals

Printers

- AirPrint enabled
- Star Micronics
- Custom America

Barcode Scanners

- UPC readers
- QR Code readers
- 2D & 3D

Card readers

- MagTek
- ID Tech
- Square

Need something special?

Just ask; we love the challenge.
If you can dream it,
we can build it.

3972

TRADES CART FOR FACILITIES MAINTENANCE

TRADES CART WITH LOCKING CABINET, INCLUDES 2 PARTS BOXES AND 4 PARTS BINS, BLACK

SKU: FG618088BLA

The Rubbermaid Commercial Rolling Tool Chest moves productivity right to the work site with a total tool storage and mobile workbench system.

- Won't rust, dent, chip, or peel
- Rounded corners protect walls and furniture
- Easy-access bottom shelf
- 5" non-marking casters
- Four 5" non-marking casters maneuver the cart easily over hard surfaces and through doorways

RUBBERMAID FG618088BLA SPECS	
Length	38 Inches
Width	19 3/16 Inches
Height	33 3/8 Inches

SOURCE: https://www.webstaurantstore.com/rubbermaid-fg618088bla-38-x-19-3-16-black-trades-cart-with-locking-cabinet/690FG61808BK.html?utm_source=bing&utm_medium=cpc&utm_campaign=Shopping%20LP&utm_term=110400560686&utm_content=Equipment

4100

USER GUIDE

Mobility MiX Cart

HKPX2VC/A Mobility MiX Cart 30

HKPY2VC/A Mobility MiX Cart 45

COST SOURCE:
https://www.amazon.com/Bretford-Mobility-Notebooks-Platinum-HKPY2BG1/dp/B06WVW9ZFB

TECHNICAL SPECIFICATIONS

CAPACITY per slot width	1″	1.25″	1.5″	
HKPX2VC/A 2 modules	30	24	20	devices
HKPY2VC/A 3 modules	45	36	30	devices

COMPATIBILITY Optimized for use with most Apple MagSafe (45W, 60W, 85W), USB (10W, 12W), and USB-C (29W, 61W, 87W) power adapters, supporting all sizes and models of MacBook and iPad.

OUTSIDE DIMENSIONS 33.50″W x 26.00″D x 44.5″H

SLOT DIMENSIONS 1″ or 1.25″ or 1.5″ W x 10″H or 10″H x 17″D

WEIGHT WITHOUT DEVICES 176 lb (30 cart)
190 lb (45 cart)

POWER MANAGER Digital

POWER REQUIREMENTS 100 -125V AC, 12A, 50/60Hz;
220-240V AC, 8A, 50/60Hz;
optional USB output; 5V DC, 2.4A

SHIPPING Ships fully assembled, ready to load devices

WARRANTY 12 years cart, 3 years electrical. For full warranty terms and conditions, please visit: bretford.com/warranty

MADE IN USA with globally sourced components

c UL us LISTED

MOBILE MEDIA CABINETS

As the level of technology in today's educational environments skyrockets, the need for connecting students to various media increases as well. Wenger's Mobile Media Storage Carts are portable, lockable, media hubs that will get your technology where it needs to be. It has a durable worksurface on top, plenty of room for electronics inside and is easy to maneuver. Like the Wenger Fixed Media Cabinets, these come in one or two-column designs and are configurable with many of the accessories shown on the back cover.

Two column cabinet with Rackmount type on the left and Standard on the right. Shown in Solar Oak finish.

One column Standard cabinet. Shown in Fusion Maple finish.

CONSTRUCTION

- Size: 1 column: 32"w x 24⅝"d x 42"h (813 w x 625 d x 1067 mm h)
  2 column: 48¼" x 24⅝"d x 42"h (1226 w x 625 d x 1067 mm h)
- Cabinet is constructed of ¾" (19 mm) thick industrial grade composite wood with no added formaldehyde
- Worksurface is thermofoil over composite core for high wear resistance
- Panels are finished with thermally fused polyester laminate in Wenger standard colors
- Full locking wood doors
- Durable, smooth rolling swivel casters
- Locking rear access door
- Cable management with clips, cable pass through and cord wrap
- Steel pilaster rail to allow for mounting of shelves and drawers and ability to reposition along its length
- Two 5-knuckle steel hinges with powder-coat painted finish, through-bolted to door and side panels
- Ten-year warranty

Slide-Out Shelf
A full width slide-out shelf for a laptop, keyboard or added worksurface area. Included with the two-column model or as an add-on with the single column design.

Mobility
Sturdy handles and wheels make transport easy.

Rear Access
It's easy to access your cables and connections with a lockable access door on the back.

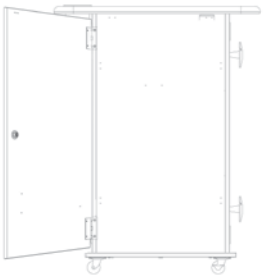

Standard
Our base model, perfectly suited for filling with drawers and shelves from top to bottom.

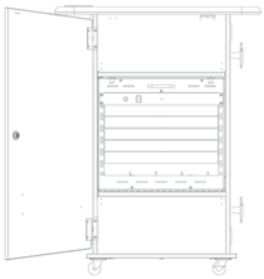

Rackmount
Choose the rackmount model that holds seven rackmount units. Power strip included.

4102 & 4103

CONFIGURABILITY – MAKE IT YOUR OWN

Every facility's storage needs are different, so a cookie-cutter storage solution just won't do. Wenger's new mobile and fixed storage cabinets are configurable – giving you the flexibility to make the most of your storage space. Add drawers, shelves, hooks, baskets and more. Just contact your representative or use our new online configurator to create your media storage cabinet today. Go to www.wengercorp.com/mediacabinets

Rackmount
19" (483 mm) standard 7-unit rackmount. Order up to three per column in a fixed cabinet and one per column in a mobile cabinet. (Power strip included.)

4" Drawer
(102 mm) Steel body drawer. A great spot for mics, adapters, clamps, zip ties, tools, etc.

Adjustable Shelf
Brackets on the cabinet let you add shelves right where you need them.

Fixed Shelf
All cabinets come with one or two fixed shelves.

Combination Keypad
You can opt for a combination keypad instead of a standard lock if you wish.

Power Strip
Optional 6-unit power strip to add to standard cabinets.

File Drawer
Perfect storage for instructional materials, manuals, warranties and other paperwork.

Slide-Out Shelf
Add a slide out shelf to create an instant workspace for laptops, electronics, or minor repairs.

Cable Pass Through
Easily route cables or power cords out the side of your cabinet.

Storage Bins
Semi-opaque bins are available for storing small parts, connectors and more.

Accessories (Organizer model)**:**
The grid that comes on the back panel and inside door of the Organizer model allows you to add holders and hooks as needed. (not available for mobile models)

Storage Basket

Cable Minder

Single Hook

Mic Stand Holder

CD Holder

Optional Accessories ✔	Fixed Standard	Fixed Organizer	Fixed Rackmount	Mobile Standard	Mobile Rackmount
Fixed Shelf	Included	Included	Included		Included
Adjustable Shelf	✔	✔	✔	✔	✔
Slide-Out Shelf	✔		✔	✔*	✔*
4" (102 mm) Drawer	✔		✔	✔	✔
File Drawer	✔		✔	✔	✔
Rackmount			✔		✔
Power Strip	✔		Included	✔	Included
Lock with Key	Included	Included	Included	Included	Included
Keypad Lock	✔	✔	✔	✔	✔
Storage Basket		✔			
Cable Minder		✔			
Single Hook		✔			
CD Holder		✔			
Mic Stand Holder		✔			

All fixed and mobile cabinets can be ordered in single or double column. *Double mobile unit comes with full-width slide-out shelf included.

Color Options (All models)

Cherry | Evening Tigris | Fusion Maple | Solar Oak | Wenger Maple | Oyster | Pebble | Graphite

Mobile cabinet worksurface available in Shark Grey only.

Wenger JR CLANCY GEARBOSS

© 2019 Wenger Corporation
USA/2-19/200/W/LT0378D

WENGER CORPORATION Phone 800.4WENGER (493-6437) Worldwide +1.507.455.4100 | Parts & Service 800.887.7145 | Canada Office 800.268.0148 | wengercorp.com
555 Park Drive, PO Box 448 | Owatonna | MN 55060-0448

JR CLANCY Phone 800.836.1885 Worldwide +1.315.451.3440 | jrclancy.com | 7041 Interstate Island Road | Syracuse | NY 13209-9713

GEARBOSS Phone 800.493.6437 | email gearboss@wengercorp.com | gearboss.com | 555 Park Drive, PO Box 448 | Owatonna | MN 55060-0448

4108

8 SPECIFICATIONS

■ General

Item	Specifications		
Power source	12VDC (AC adapter: 100 ~ 240VAC)		
Power consumption	30W (AC adapter included)		
Outside dimensions	457×562×138mm (18.0×22.1×5.4 in) (When folded)		
	457×519×587mm (18.0×20.4×23.1 in) (When set up)		
Weight	Approx. 8.5kg (18.7 lbs) (Main body only)		
Input selection	Main body / External one system		
Output terminal	DVI output	DVI-D 24P connector, female	×1
	RGB output	Mini DSUB 15P connector, female	×1
	Composite video output	RCA pin jack / 75Ω unbalanced (NTSC/PAL)	×1
Input terminal	RGB input	Mini DSUB 15P connector, female	×1
Ext. control terminal	RS-232C	Dsub 9P connector, male	×1
	USB (2.0 compliant)	Type B receptacle	×1
Memory interface	SD card slot		×1

4109

NOTE: PLEASE SEE INSTALLATION RECOMMENDATIONS HIGHLIGHTED ON PAGE 2

DATA SHEET

Polycom® Ceiling Microphone Array

Extraordinary room coverage with superior audio pickup

Polycom's digital microphone array is the only audio pickup device on the market that offers consistent, reliable, 360-degree voice pickup and Polycom StereoSurround™ audio. When paired with Polycom video conferencing system or installed audio solutions, the audio capture and delivery is unmatched.

Polycom's easy-to-mount Ceiling Microphone Array eliminates conference table clutter and stays out of the way of pencil tappers and paper rustlers, while providing the same clear, crisp audio delivery as our tabletop microphone arrays. Unobtrusively, the microphone elements are located in the room, while the electronics are mounted above the ceiling tile, so you don't even know it's there. This makes the Ceiling Microphone Array the perfect solution for any application, large or small, from the classroom to the boardroom to the huddle room, anywhere "out of sight, out of mind" is a good philosophy.

Acoustic Fence™ Technology

Open workspaces are prevalent but can create challenges for effective collaboration across remote locations. Create a virtual fence in open workspaces with RealPresence® Group Series Acoustic Fence technology to isolate sound capture within the fence. Ceiling Microphone Arrays define the fence area so audio outside of the beam is attenuated. Remote participants are no longer forced to hear distracting noises and can focus on important problem solving within the meeting instead.

Stereo pickup with a single microphone array

The Ceiling Microphone Array eliminates acoustic noise coming from the ceiling, while boosting sensitivity gain even when the speaker is directly beneath the microphone. To achieve up to 1,600 square feet of coverage, simply connect up to four Ceiling Microphone Arrays to a single Polycom® RealPresence® Group Series 500 or 700 video system. Adjustable drop height from ceiling will accommodate any room size or environment. This huge coverage area is up to three times larger than competitive unidirectional ceiling microphones. It is delivered as a complete kit with all mounting hardware required for easy installation.

Polycom Ceiling Microphone Arrays seamlessly integrate with the RealPresence Group Series video systems and Polycom SoundStructure® installed audio solutions, so you'll always enjoy the best audio quality in echo cancellation, noise reduction and automatic gain control.

Benefits

- **Superior audio pickup** — Adjustable drop height provides extraordinary voice pickup from anywhere in the room
- **Award-winning technology** — Makes full use of Polycom's digital microphone and 22 kHz StereoSurround™ audio
- **Superb room coverage** — 360-degree coverage from three cardioid elements can handle a room up to 1,600 square feet with four arrays, three times greater than competitive unidirectional products
- **Capture the speaker** — The only ceiling microphone on the market with a directional microphone beam, automatically pointing to the person speaking
- **Neat, easy installation** — Complete kit includes everything you need to hide electronics in the ceiling, out of the way of the floor and tabletop

Product Specifications

Primary solution includes

- Microphone array available in white or black
- Electronics enclosure with ceiling mounting hardware (UL 2043 compliant and suitable for use in air-handling spaces)
- (1) 24” (60 cm) microphone interface cable*
- (1) 50’ (1524 cm) plenum C-Link 2 cable (RJ45)
- Wall plate
- Walta to RJ45 adapter cable used for installations with RealPresence Group and HDX 6000/7000/8000 series systems

Extension kit includes

- Microphone array available in white or black
- Electronics enclosure with ceiling mounting hardware (UL 2043 compliant and suitable for use in air-handling spaces)
- (1) 24” (60 cm) microphone interface cable*
- (1) 25” (762 cm) plenum C-Link II cable (RJ45)

Digital microphone specifications

- 360-degree directional pickup
- Three cardioid elements per microphone – elements spaced 120 degrees apart
- Each Ceiling Microphone Array covers a 24’ diameter
- Total coverage area for a single Ceiling Microphone Array is 400 square feet

Video System Compatibility	Maximum CMAs Supported
RealPresence Group 500 & 700, SoundStructure C12, SoundStructure C16, HDX 9000	Up to 4
HDX 8000	Up to 3
RealPresence Group 300/310, SoundStructure C8, HDX 7000	Up to 2
HDX 6000	Up to 1

Audio features**

- Dynamic microphone steering
- Full-duplex digital audio
- Instant adaptation echo cancellation
- Automatic noise suppression (ANS)
- Automatic gain control (ACG)

Product characteristics

- Dimensions (W/D/H): 4”/6”/1⅝”, 101.6 mm/152.4 mm/41.3 mm
- Weight 14 oz; 397 kg

Installation guidelines

- Avoid interference with fluorescent lighting
- Avoid close proximity with AC vents
- Secure mounting ears for electronic boxes
- Avoid all other obvious sources of noise
- Microphone array should be 7-8’ above the floor
- Maximum cable distance to the primary (first) electronics box is 100’; maximum cable distance between extensions is 25’

Warranty

- One-year return for factory parts and labor

Usage environment ideas

- K-12, primary and secondary school locations
- Higher education including universities, colleges, community colleges, technical colleges
- Corporate training rooms
- Auditoriums
- Large lecture halls
- Medical training facilities
- Corporate boardrooms
- Military training/distributed learning rooms, command centers, briefing centers
- Continuing education center
- Museums or hospitals

* Also available as an option: 6’ white or black

** Features supported with Polycom room video codecs and SoundStructure installed audio solutions

About Polycom

Polycom helps organizations unleash the power of human collaboration. More than 400,000 companies and institutions worldwide defy distance with video, voice and content solutions from Polycom. Polycom and its global partner ecosystem provide flexible collaboration solutions for any environment that deliver the best user experience and unmatched investment protection.

Polycom, Inc.
1.800.POLYCOM
www.polycom.com

Polycom Asia Pacific Pte Ltd
+65 6389 9200
www.polycom.com.sg

Polycom EMEA
+44 (0)1753 723282
www.polycom.co.uk

© 2018 Polycom, Inc. All rights reserved. All Polycom® names and marks associated with Polycom products are trademarks or service marks of Polycom, Inc. and are registered or common law marks in the United States and other countries. All other trademarks are property of their respective owners. No portion hereof may be reproduced or transmitted in any form or by any means, for any purpose other than the recipient’s personal use, without the express written permission of Polycom.

34180-0518

JUNE 14, 2019

4110

DATA SHEET

Polycom® EagleEye™ Series Cameras

High definition video imaging

Polycom EagleEye IV 12x Camera (silver)

Polycom EagleEye IV 4x Camera (black)

Polycom EagleEye Acoustic Camera

Polycom® EagleEye™ cameras provide the ultimate experience to optimize video collaboration. EagleEye™ IV and EagleEye™ Acoustic cameras are designed to meet your varying environments and applications in conjunction with Polycom® RealPresence® Group Series video systems. From huddle rooms, to desktops, classrooms to customized board rooms, Polycom EagleEye cameras deliver best in class video quality to all participants.

All Polycom EagleEye cameras offer the following features:

- High definition video transmission
- Clear, crisp natural colors from precisely tuned optics
- Quick, fluid movements with sharp focus
- Camera power supplied by Polycom RealPresence Group Series video system eliminating the need for a power supply

Multiple camera options to meet your needs

EagleEye IV

The Polycom EagleEye IV 4x and 12x cameras have a completely digital camera sensor to capture incredible detail for more natural communication. With a wide field of view, these cameras are flexible enough to use in any room environment, from a small huddle room to a large boardroom. With the optional Polycom EagleEye Digital Extender, the cameras can be mounted up to 330 feet away from the video system, providing you the flexibility to move the camera where you need it. Combine the EagleEye IV camera with EagleEye™ Producer or EagleEye™ Director II for an automated camera experience.

EagleEye Acoustic

The Polycom EagleEye Acoustic camera is an optimal solution for a smaller environment. With built-in microphones and small footprint, this camera will easily blend into an executive office or huddle room.

	EagleEye IV	EagleEye Acoustic
Camera type	1/2.33” CMOS	1/2.7” CMOS
H/V resolution	1920 x 1080	1920 x 1080
Output	SMPTE 296M 1280 x 720p60, SMPTE 274M 1920 x 1080p, 60/50	SMPTE 274M 1920 x 1080p, 30/25
Lens focal length	f=3.76–37.6 mm	f=4.37 mm
Lens F#	1.2	2.0
Zoom	4x optical (black), 10x/12x (silver) optical/digital	2x digital
Focus	Auto	Auto
Horizontal field of view	65°, 85° with wide angle adaptor	67°
Vertical field of view	39°	39°
Min. illumination	50 lux	50 lux (F2.0)/50 IRE
Exposure	Auto-iris, AGC	AGC
SNR	50 dB	50 dB
Pan range	+/-100°	+/-24°
Tilt range	+20/-30°	+/-14°
I/O	Mini-HDCI—Hirose DH60-37P	HDCI, 60 pin (incl: power, Comm, IR, HDMI, audio)
IR detectors	•	•
Power consumption	12 v @ <1.2A power	200 mA @ 12V DC
Dimensions (W x H x D)	218 x 138 x 118 mm	45.4 x 43 x 111 mm
Built-in-microphones		•
Video system compatibility	RealPresence Group Series	RealPresence Group Series
Room size	Small, medium, large	Small

* All camera data is subject to change without notice and performance may vary based upon environmental conditions.

Automated camera options

EagleEye Producer Kit—Utilizing the latest in facial recognition technology, the system continually scans the room and seamlessly commands the MPTZ camera to appropriately frame the users. This intelligent method of dynamic framing greatly improves the user experience and solves the common problem of wide angle shots that fail to immerse participants in a meeting. EagleEye Producer enables you to see true expressions and vital non-verbal communications for more naturally effective meetings.

Compatible with EagleEye IV 4x and 12 cameras. The EagleEye Producer mounting kit uses the Universal Camera mount to mount the EagleEye Producer and the EagleEye camera on the wall, display or tripod.

EagleEye Director II Kit—Changes the face of group video communications by enabling close-up views of every speaker in a video conference, regardless of their location or the number of people in the room. By highlighting, zooming in, and framing active speakers, everyone can clearly see critical facial expressions and read the subtle body language which enables deeper engagement and more effective meetings.

Compatible with EagleEye IV 12x cameras.

Available accessories

Wide angle lens—extends the field of view for EagleEye IV to 85°

Cables—The EagleEye IV camera uses a mini-HDCI to HDCI cable which comes in a variety of different sizes to meet your needs:

- 300mm (2457-64356-030)
- 457mm (2457-64356-018)
- 1m (2457-64356-100)
- 3m (2457-64356-001)
- 10m (2457-64356-101)

EagleEye Digital Extender—allows EagleEye IV or EagleEye Acoustic, sans audio, to be mounted 330 feet away with a Cat6a cable to extend the video, control and power from the source to the destination.

Digital Breakout Adapter—breaks out the EagleEye IV or EagleEye Acoustic to HDMI type connector and DB9 connector. One version at the camera also provides power to the camera. At the codec the Digital Breakout Adapter connects to an available HDCI input.

Universal Mounting Shelf—supports the EagleEye IV cameras. Provides necessary parts to mount the EagleEye IV on the wall, a tripod or a display.

Codec Shelf Mounting Kit —allows the RealPresence Group Series 300, 310 or 500 and EagleEye™ IV camera to be mounted together in conjunction with the Universal Mounting Shelf.

Privacy Cover—For added security, the privacy cover for either the EagleEye IV or the EagleEye III secures to the camera allowing you to open and close the cover as needed.

About Polycom

Polycom helps organizations unleash the power of human collaboration. More than 400,000 companies and institutions worldwide defy distance with video, voice and content solutions from Polycom. Polycom and its global partner ecosystem provide flexible collaboration solutions for any environment that deliver the best user experience and unmatched investment protection.

Polycom, Inc.
1.800.POLYCOM
www.polycom.com

Polycom Asia Pacific Pte Ltd
+65 6389 9200
www.polycom.com.sg

Polycom EMEA
+44 (0)1753 723282
www.polycom.co.uk

© 2017 Polycom, Inc. All rights reserved. All Polycom® names and marks associated with Polycom products are trademarks or service marks of Polycom, Inc. and are registered or common law marks in the United States and other countries. All other trademarks are property of their respective owners. No portion hereof may be reproduced or transmitted in any form or by any means, for any purpose other than the recipient's personal use, without the express written permission of Polycom.

28930-0517

JUNE 14, 2019

\Orchestrating a brighter world NEC

M353WS
Professional Short-Throw Projector

Datasheet

The excellent price performance ratio makes this projector especially suitable for classrooms and mid-sized meeting rooms. The filter free design with dust-protected DLP light engine, very long lamp life and low power consumption results into remarkably low cost of ownership. Various innovative new ECO functions such as the Ambient Light Sensor help to significantly reduce power consumption. A vast number of input terminals boosts connectivity and allows advanced interactive multimedia capabilities.

The interactive Multi-pen option and optional DisplayNote Presenter software turn this short-throw projector into the centerpiece of a modern learning and meeting environment.

Benefits

Connect and share – with up to 40 wireless devices with the NEC Image Express Utility (Windows & MAC) as well as Wireless Image Utility (iOS & Android) software.

Less Shadow and Glare – not standing in the light beam gives you more space to engage with your audience when presenting.

Optional Multi-pen and Touch Interactivity – with auto-calibration on any kind of surface.

Robust and dust resistant – thanks to sealed DLP light engine.

Great connectivity – due to numerous analog and digital connection terminals as well as network capability.

Low cost of ownership – up to 8000h lamp life, low power consumption.

JUNE 14, 2019

Product Information

Product Name	M353WS
Product Group	Professional Short-Throw Projector
Order Code	60003975

Image

Projection Technology	1-chip DLP™ Technology
Native Resolution	1280 x 800 (WXGA)
Aspect Ratio	16:10
Contrast Ratio [1]	10000:1
Brightness [1]	3500 ANSI Lumen (approx. 75% in Eco Mode)
Lamp	270 W AC (162 W AC Eco Mode)
Lamp Life [hrs]	8000 Eco / 5500 Normal / 3500 High Bright Mode
Lens	F= 2.4, f= 6.5 mm
Projection Angle [°]	40.7 - 40.9
Projection Factor	0.45 : 1
Projection Distance [m]	0.56 – 1.48
Screen Size (diagonal) [cm] / [inch]	152.4 / 60" - 381 / 150"
Zoom	Digital Zoom
Focus Adjustment	Manual
Supported Resolutions	1920 x 1080 (HDTV 1080i/60; HDTV 1080i/50); 1680 x 1050 (WSXGA+); 1600 x 1200 (UXGA); 1600 x 900 (WXGA++); 1440 x 900 (WXGA+); 1400 x 1050 (SXGA+); 1366 x 768 (WXGA); 1360 x 768 (WXGA); 1280 x 1024 (Maximum resolution of digital input); 1280 x 1024 (SXGA); 1280 x 1024 (MAC 23"); 1280 x 960 (SXGA); 1280 x 800 (WXGA); 1280 x 768 (WXGA); 1280 x 720 (HDTV 720p); 1152 x 870 (MAC 21"); 1152 x 864 (XGA); 1024 x 768 (XGA); 832 x 624 (MAC 16"); 800 x 600 (SVGA); 720 x 576 SDTV 480p/480i; 720 x 576 (DVD progressive); 720 x 480 SDTV 576p/576i; 720 x 480 (SDTV 480p); 640 x 480 (VGA/MAC 13")
Frequency	Horizontal: 15–100 kHz (RGB: 24 kHz– 100 kHz); Vertical: 50 – 120 Hz

Connectivity

RGB (analog)	Input: 1 x Mini D-sub 15-pin, compatible to component (YPbPr) Output: 1 x Mini D-sub 15 pin
Digital	Input: 2 x HDMI™ (Deep Color, Lip sync)
Video	Input: 1 x RCA
Audio	Input: 1 x 3.5 mm Stereo Mini Jack; 1 x RCA Stereo Output: 1 x 3.5 mm Stereo Mini Jack (variable)
Microphone	Input: 1 x 3.5 mm Monaural Mini Jack (Dynamic mic / Condenser mic)
Control	Input: 1 x D-Sub 9 pin (RS-232) (male)
LAN	1 x RJ45; Optional WLAN
USB	1 x Type A (USB 2.0 high speed); 1 x Type B
3D Sync	Output: 1 x Mini DIN 3pin
Video Signals	NTSC; NTSC 4.43; PAL; PAL-M; PAL60; SECAM

Remote Control

Remote Control	Aspect Ratio; Audio Control; Auto Adjust; Automatic Picture Adjustment; AV Mute; Digital Zoom; Freeze; Help Eco Mode; ID set; Keystone Correction; Lamp Mode Control; Magnify-function; Optional Presentation and Mouse Control; Picture Adjust; Source Select

Electrical

Power Supply	100-240 V AC; 50 - 60 Hz
Power Consumption [W]	278 (Normal) / 246 (Eco) / 2.9 (Network Stand-by) / 0.4 (Stand-by); 335 (High Bright)

Mechanical

Dimensions (W x H x D) [mm]	368 x 97 x 286 (without lens and feet)
Weight [kg]	3.6
Fan Noise [dB (A)]	30 / 30 / 36 (ECO / Normal / High Bright)

Environmental Conditions

Operating Temperature [°C]	5 to 40
Operating Humidity [%]	20 to 80
Storage Temperature [°C]	-10 to 50
Storage Humidity [%]	20 to 80

Ergonomics

Safety and Ergonomics	CE; EAC; Gost-R; RoHS; TUEV Type Approved
Speakers [W]	1 x 20 (mono)

Additional Features

Special Characteristics	3D ready; Ambient Light Sensor; Auto Eco Mode; Auto Power-ON Function; Automatic and manual Keystone Correction (V= +/-30°); Carbon Savings Meter; Colour Management; Constant Brightness Mode; Content Transmission via Network; Crestron RoomView; DICOM Simulation; Direct Power-Off Function; Full 3D DLP® LINK support; High Altitude Mode; Kensington security slot; Keypad Lock; Magnify; NaViSet Administrator 2; Off-Timer; Optional User Logo; Optional WLAN; OSD with 29 languages; Password Security System; Quick Start; Remote control and administration via LAN and RS232; Security Bar; Simple Access Point; USB Viewer for JPEG; Virtual Remote for direct PC control; Wall Colour Correction

Green Features

Energy Efficiency	75 % AV mute function; Auto ECO Mode; ECO scheduler; Green one touch ECO and AV mute button; ImageCare® Technology; Intelligent Power Management; Longer lamp life; Reduced power consumption. Only 0.4W stand-by; Software scheduling
Ecological Materials	100% recyclable packaging; Downloadable manuals; ECO packaging
Ecological Standards	ErP compliant; RoHs compliant; WEEE

Warranty

Projectors	3 years pan-European service
Light Source	6 months, max. 1000 hrs

Shipping Content

Shipping Contents	IR Remote Control (RD-469E); Lens Cap; Mini D-SUB Signal Cable; Power Cord (3 m); Quick Setup Guide; Security Sticker; Users Manual on CD-ROM

Optional Accessories

Optional Accessories	Cable Cover (NP05CV); DisplayNote; DLP-Link 3D Glasses (NP02GL, VolfoniFit); Interactive Unit (NP03Wi); Lamp (NP30LP); Wall Mount Kit (NP05WK); Wireless LAN module (NP05LM)

[1] Compliance with ISO21118-2012

TUEV Type Approved

CE

Gost-R

RoHS

This document is © 2019 NEC Display Solutions Europe GmbH.

All rights reserved in favour of their respective owners. All hardware and software names are brand names and/or registered trademarks of the respective manufacturers. All specifications are subject to change without notice. Errors and omissions are excepted. 12.02.2019

JUNE 14, 2019

NEC NEC Solutions (America), Inc.	**Installation and Assembly - Universal Ceiling Mount**	**Model: NP01UCM**

Maximum Load Capacity: 50 lb (22.7 kg)

Read instruction sheet before you start installation and assembly.

⚠ WARNING

- Make sure that the supporting surface will safely support the combined load of the equipment and all attached hardware and components.

IMPORTANT! Be sure not to touch the projector while tightening the set screw on the ball and socket mount. This may cause the image to be unaligned when you let go.

IMPORTANT! Turn to the appropriate page for your ceiling installation.

Applications:

Flush Mount ..... page 7

Extension Column ..... page 8

Installations:

To Wood Joist Finished Ceilings, Exposed Wood Joists, or Wood Beam Ceilings ..... page 5

To Concrete Ceilings ..... page 6

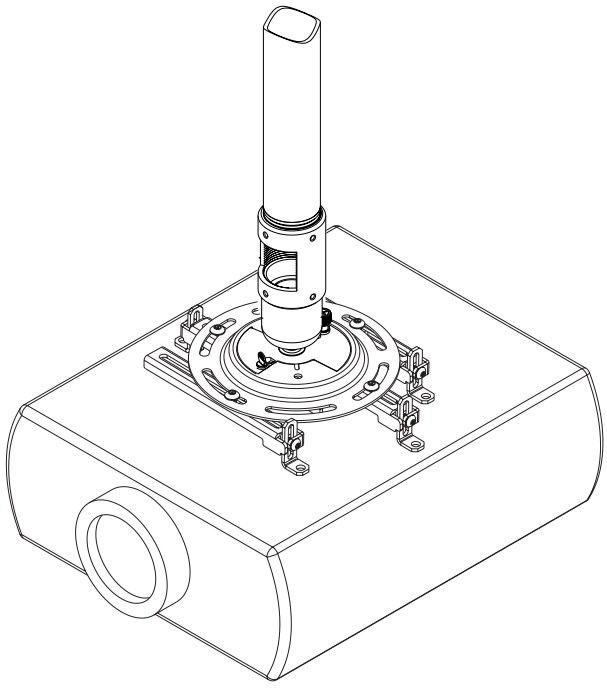

Compatability Chart for NEC Projectors

Manufacturer	Model	Manufacturer	Model
NEC	HT410	NEC	MT1035
NEC	HT510	NEC	MT1035+
NEC	GT1150	NEC	MT830
NEC	GT2150	NEC	MT830+
NEC	GT5000	NEC	MT1040
NEC	GT6000	NEC	MT1045
NEC	GT6000R	NEC	MT840
NEC	GT2000	NEC	MT850
NEC	GT2000R	NEC	MT1050
NEC	GT950	NEC	MT1055
NEC	LT10	NEC	MT1056
NEC	LT140	NEC	MT860
NEC	LT84	NEC	MT1060
NEC	LT150	NEC	MT1060R
NEC	LT150z	NEC	MT1065
NEC	LT75	NEC	Multisync LT245
NEC	LT75z	NEC	NP1000
NEC	LT85	NEC	NP2000
NEC	LT154	NEC	V37
NEC	LT155	NEC	LT380
NEC	LT156	NEC	VT440
NEC	LT157	NEC	VT440K
NEC	LT158	NEC	VT540
NEC	LT170	NEC	VT540K
NEC	LT180	NEC	VT650
NEC	LT220	NEC	VT45
NEC	LT240	NEC	VT45K
NEC	LT240K	NEC	VT46
NEC	LT245	NEC	VT460
NEC	LT260	NEC	VT465
NEC	LT260K	NEC	V47
NEC	LT265	NEC	VT560
NEC	LT280	NEC	VT660
NEC	LT35	NEC	VT660K
NEC	HT1000	NEC	VT770
NEC	HT1100	NEC	VT47
NEC	MT1000	NEC	VT470
NEC	MT1020	NEC	VT480
NEC	MT810	NEC	VT48
NEC	MT820	NEC	VT570
NEC	MT1030	NEC	VT575
NEC	MT1030+	NEC	VT580
		NEC	VT670
		NEC	VT676
		NEC	WT600

Before you start check the parts list to insure all of the parts shown are included.

Parts List

	Description	Qty.	Part Number
A	ball and socket mount	1	055-0016
B	4 mm security allen wrench	1	560-9646
C	M5 x .8 x 10 mm socket pin type F screw	1	520-2031
D	#10-32 x 3/8" spade thumb screw	1	560-2107
E	#10-32 x 3/8" serrated washer head socket pin screw	1	520-2151
F	#14 x 2.5 phillips hex head wood screw	2	5S1-015-C04
G	ceiling plate	1	580-4042
H	.25" ID x .56" OD x .26 spacer	2	590-2071
I	extension column connector with cord management	1	580-4025
J	#10-32 x 3/8" socket pin screw	2	520-2084
K	#10-32 x 3/16" slotted set screw	3	520-2187
L	adapter plate	1	055-0614
M	M3 x 8 mm serrated washer head socket pin screw (not shown)	4	510-2004
N	M4 x 10 mm serrated washer head socket pin screw (not shown)	4	510-2060
O	M5 x 10 mm serrated washer head socket pin screw (not shown)	4	510-2063
P	M6 x 10 mm serrated washer head socket pin screw (not shown)	4	510-2066
Q	2 mm security allen wrench	1	560-1097
R	washer	4	540-2025

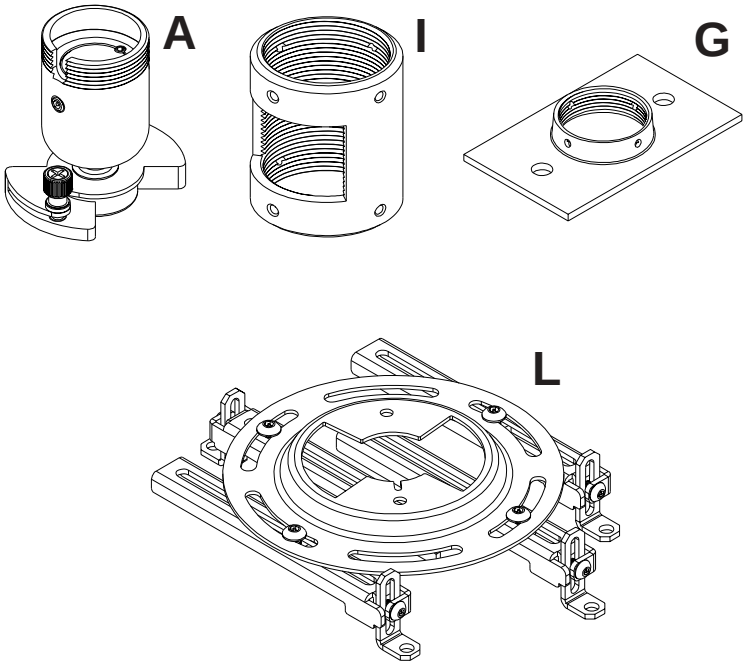

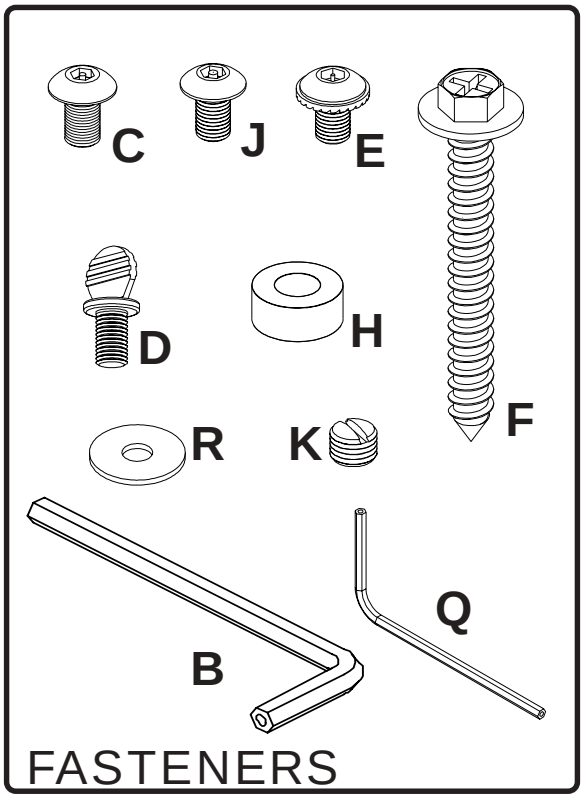

Note: Actual parts may appear slightly different than illustrated.

Installation and assembly - Universal Adapter Plate

Note: The projector you are installing may differ in appearance from the sample illustrated below.

1 Place projector upside down. Locate adapter plate (**L**) with notch facing forward as close to projector center of gravity as possible without covering any mounting holes. Loosen channels, and if there are only three mounting holes remove fourth channel. Using one channel for each mounting hole, position feet of channels over mounting holes as shown below. **Important**: If projector does not have at least three mounting holes, do not use this adapter plate.
Note: Some projectors have feet which can be removed and the corresponding threaded insert can be used for a mounting hole.
Note: Once channels are in position retighten fasteners.
*Notch indicates front of projector.

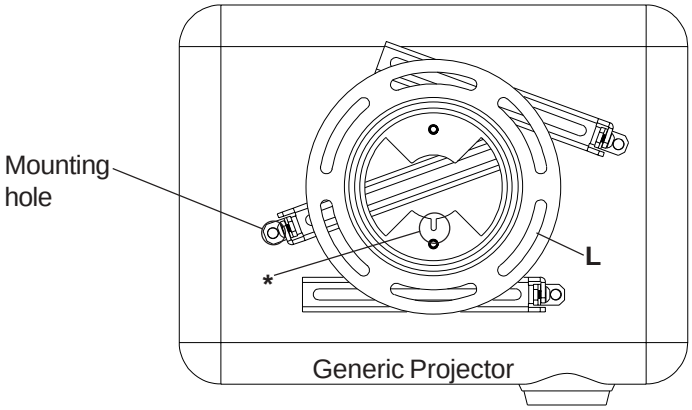

2 Attach adapter plate (**L**) to projector using one screw (**M, N, O, or P**) for each channel as shown below. Tighten all screws, while keeping the center of gravity. Be sure that adapter plate (**L**) is straight. Adjust the feet of the channels to keep the adapter plate level. Tighten all screws with 4 mm security allen wrench (**B**) or wrench provided with projector mount, while keeping the center of gravity. If M3 screws are used, tighten using 2 mm security allen wrench (**Q**).
Note: Projectors will require different size screws for mounting. Use a combination of screws (**M, N, O, or P**) and foot adjustment that will result in channels of adapter plate (**L**) fitting tightly against projector. **Important**: In order to properly engage the threads in the mounting holes, the screw must be turned at least 3 full turns.
Note: If using screw (**M**), place washer (**R**) between screw (**M**) and foot of channel.

CAUTION

- It is the responsibility of the installer to ensure that the projector is properly ventilated. Feet of channels are used to raise the mount off the projector surface.

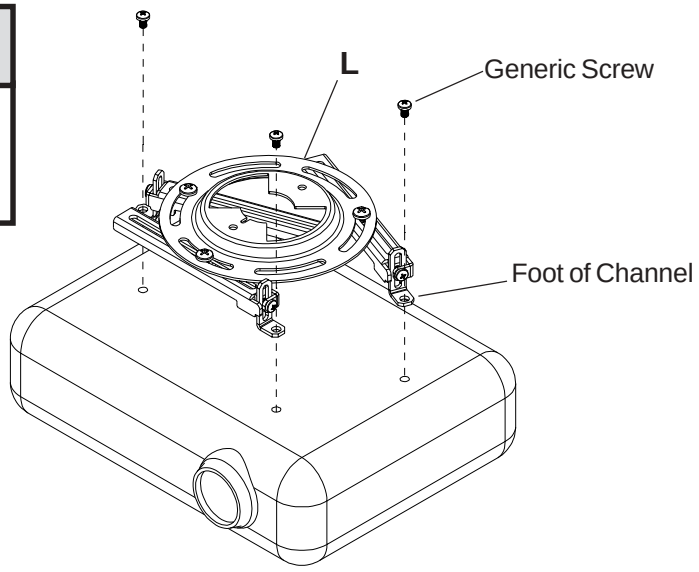

Installation To Wood Joist Finished Ceilings, Exposed Wood Joists, or Wood Beam Ceilings

1 Drill two 5/32" (4 mm) dia. holes to a minimum depth of 2.5" (64 mm). Attach ceiling plate (**G**) with two #14 x 2.5" (6 mm x 65 mm) wood screws (**F**) as shown using 3/8" (10 mm) socket wrench.

Skip to step 2.

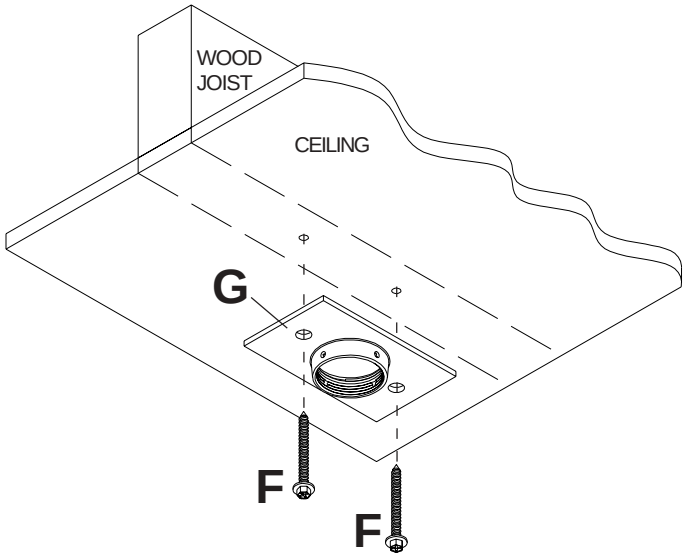

⚠ WARNING

- Tighten wood screws (**F**) so that wall plate (**G**) is firmly attached, but do not overtighten. Overtightening can damage the screws, greatly reducing their holding power.
- Never tighten in excess of 80 in • lb (9 N.M.).
- Make sure that mounting screws are anchored into the center of the studs. The use of an "edge to edge" stud finder is highly recommended.

⚠ WARNING

- It is the responsibility of the installer to verify that the supporting surface will safely support the combined load of all attached hardware and components.

IMPORTANT: Be sure to drill holes into the joist CENTER!

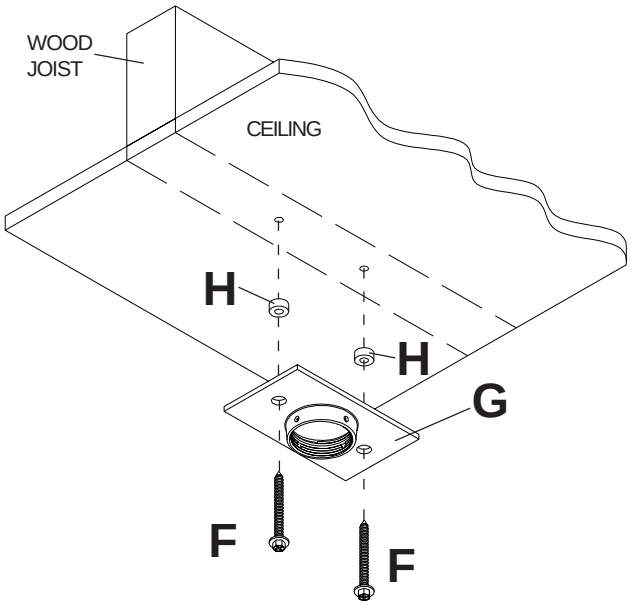

For optional Cord Management, install two spacers (**H**) between ceiling plate (**G**) and ceiling.

⚠ WARNING

- When installing wall mounts on concrete, verify that you have a minimum of 1 5/8" of actual concrete surface in the 1/4" diameter hole to be used for the concrete anchors. Do not drill into mortar joints! Concrete must meet ASTM C-90 specifications.
- Concrete must be 2000 psi density minimum. Lighter density concrete may not hold concrete anchor.
- Make sure that the supporting surface will safely support the combined load of the equipment and all attached hardware and components.
- Never exceed the Maximum Load Capacity of 50 lb (22.7 kg).

Installation to Concrete Ceilings

ACC 203 (Alligator® concrete anchors) are recommended.

1 Drill two 1/4" (6 mm) dia. holes to a minimum depth of 2.5" (64 mm). Attach ceiling plate (**G**) using two concrete anchors and #14 x 2.5" wood screws (**F**) as shown in **Illustration A** and **1**, **2**, and **3** (below). Tighten all fasteners.

IMPORTANT: It is the responsibility of the installer to verify that the ceiling will safely support the combined load of all attached hardware and components.

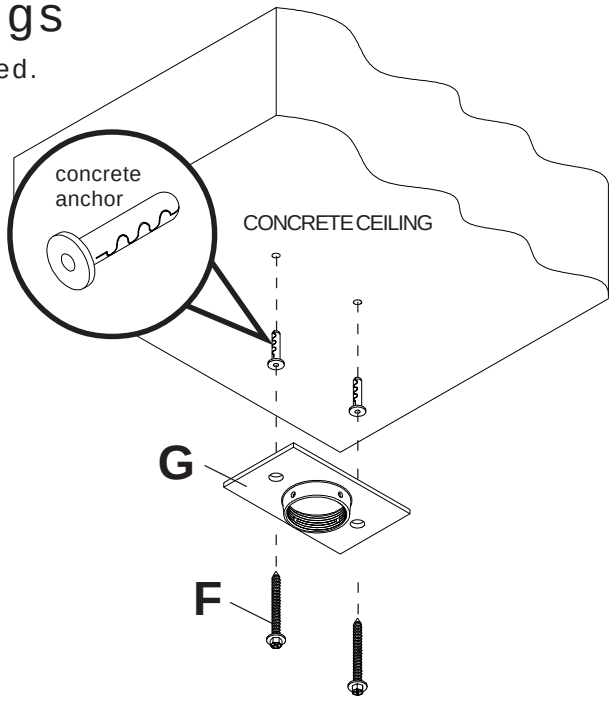

Illustration A

⚠ WARNING

- Tighten wood screws so that wall plate is firmly attached, but do not overtighten. Overtightening can damage the screws, greatly reducing their holding power.
- Never tighten in excess of 80 in • lb (9 N.M.).
- Make sure that mounting screws are anchored into the center of the studs. The use of an "edge to edge" stud finder is highly recommended.

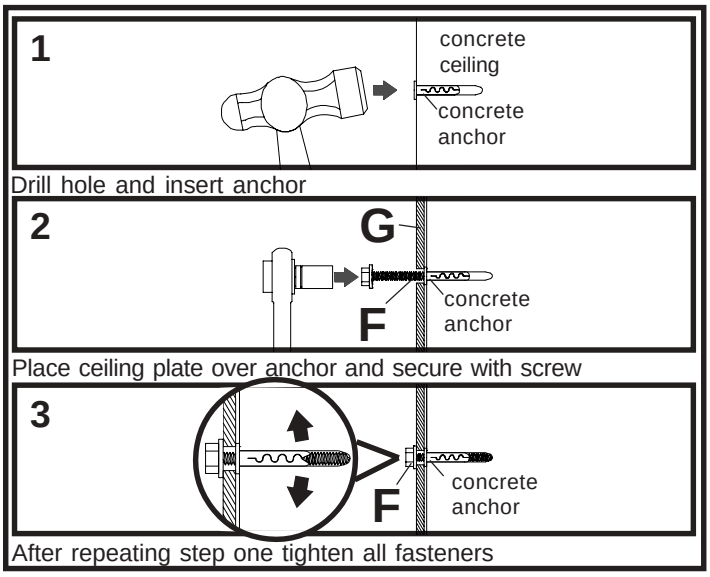

⚠ WARNING

- **FOR DIRECT ATTACHMENT TO LOAD BEARING CONCRETE ONLY!** Concrete expansion anchors are **not** intended for attachment to concrete ceilings covered with a layer of plaster, drywall, or other finishing material. If mounting to concrete ceiling covered with plaster / drywall is unavoidable, plaster / drywall must be counterbored as shown below.

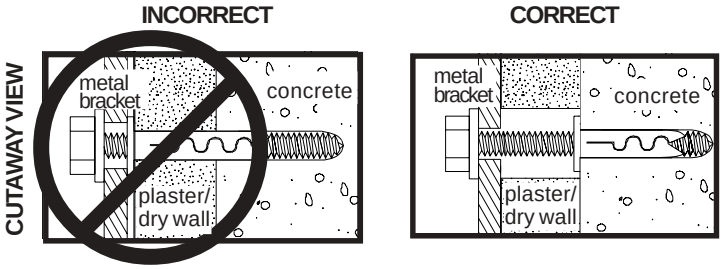

Flush Mount Application

2 Screw ball and socket mount (**A**) into ceiling plate (**G**). Align the notch with one of the four holes of the ceiling plate (**G**) and secure ball and socket mount (**A**) with a M5 x 10 mm socket pin screw (**C**) using security allen wrench (**B**) as shown in **detail 1**.
Note: Slotted set screw (**K**) is used to jam against the threads of the ball and socket mount to prevent any excess movement of the ball and socket mount (**A**). Do not overtighten screw; overtightening screw will damage threads making it difficult to separate the products.

Skip to step 3.

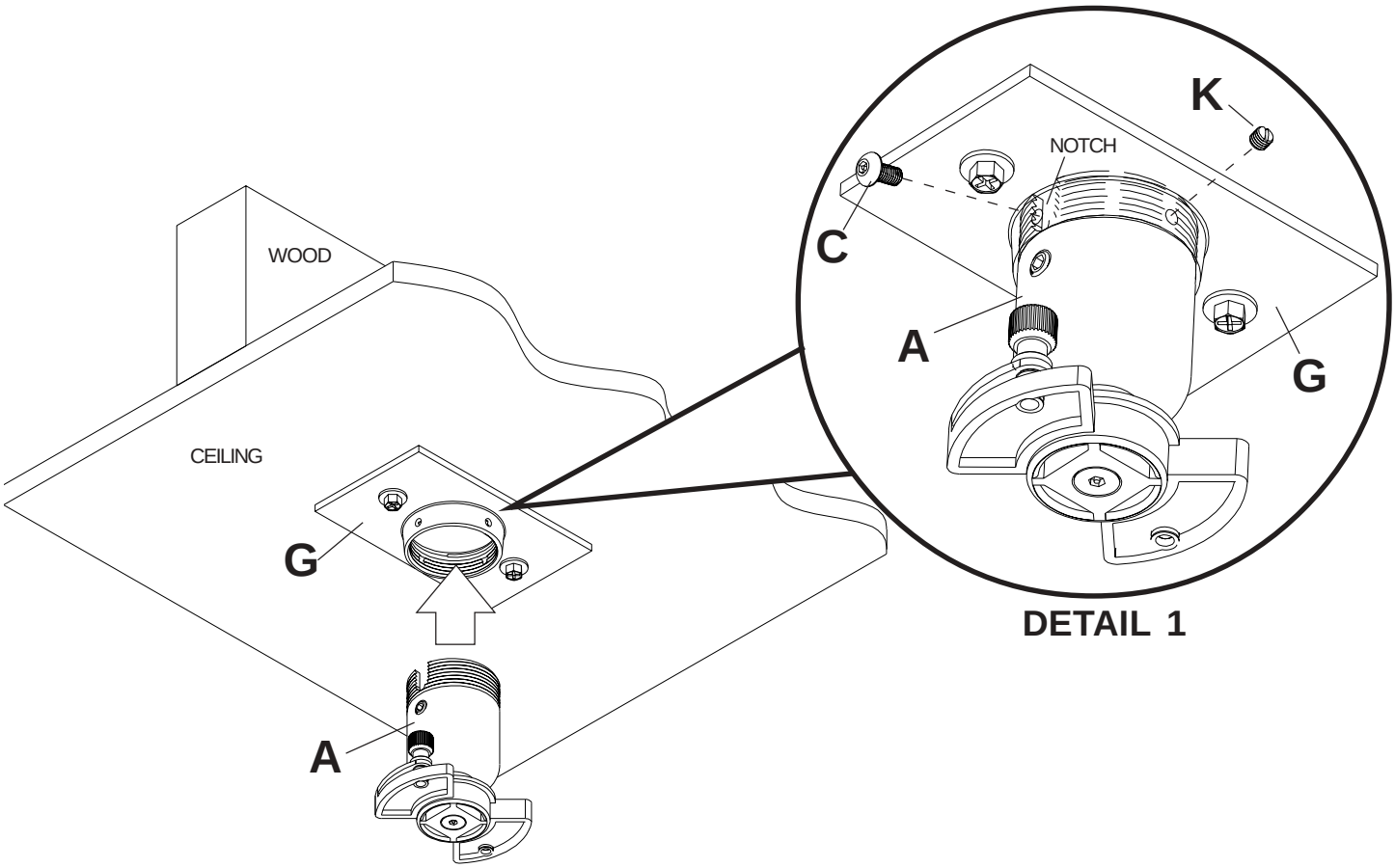

Installation to Extension Column

2 Screw extension column to ceiling plate (**G**). Align the notch with one of the four holes in the ceiling plate (**G**) and secure extension column with a M5 x 10 mm socket pin screw (**C**) using security allen wrench (**B**). **See detail 4.**

Screw extension column connector (**I**) to extension column. Align slot in extension column with one of the top holes in extension column connector (**I**). Insert and tighten one #10-32 x 3/8" socket pin screw (**J**) through extension column connector (**I**) into slot on extension column using security allen wrench (**B**). **See detail 5.**

Screw ball and socket mount (**A**) to extension column connector (**I**). Align slot in ball and socket mount (**A**) to one of the bottom holes in extension column connector (**I**). Insert and tighten one #10-32 x 3/8" socket pin screw (**J**) through extension column connector into slot in ball and socket mount (**A**) using security allen wrench (**B**). **See detail 6.**

Note: Slotted set screws (**K**) are used to jam against the threads of each connecting joint to prevent any excess movement. Do not overtighten screws; overtightening screws will damage threads making it difficult to separate the products.

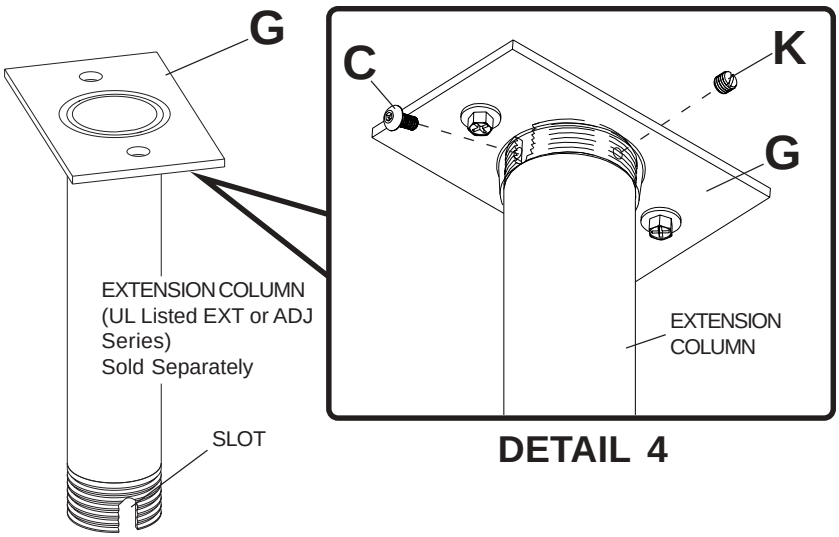

DETAIL 4

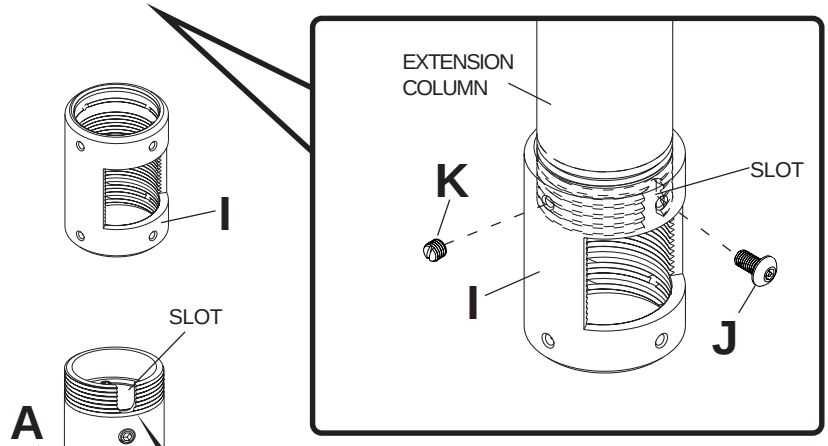

DETAIL 5

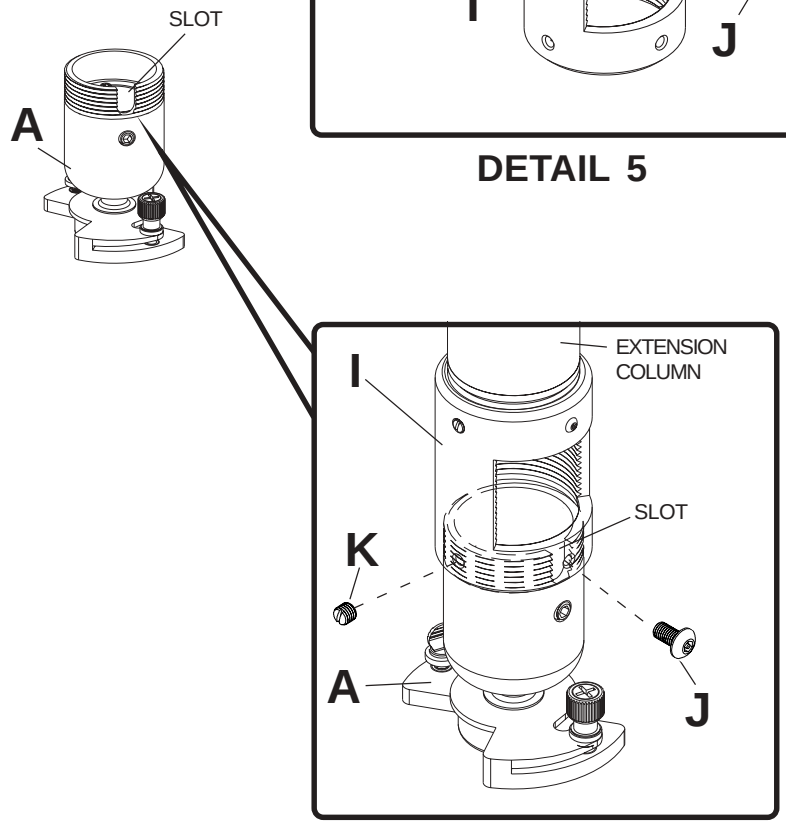

DETAIL 6

Note: The projector adapter plate and projector you are installing may differ in appearance from the sample illustrated below.

3 Attach projector, with adapter plate already on it, to the ball and socket mount (**A**) by inserting the ball and socket mount (**A**) into the adapter plate connection and twisting until the adapter plate will no longer turn (about 75°). The spring loaded captive screw should line up with a corresponding hole on the adapter plate (this should line up automatically when the two are connected). Push down and tighten the spring loaded captive screw to secure the adapter plate to the mount. If not using the optional security feature, fasten thumb screw (**D**) in the hole opposite the spring loaded captive screw.

OPTIONAL: For security, insert serrated washer head socket pin security screw (**E**) in the hole opposite the spring loaded captive screw. Tighten with security allen wrench (**B**). This will prevent the projector from being removed.

Note: Be sure to only use the #10-32 x 3/8" screw (E) (or the thumb screw (D)) opposite the spring loaded captive screw.

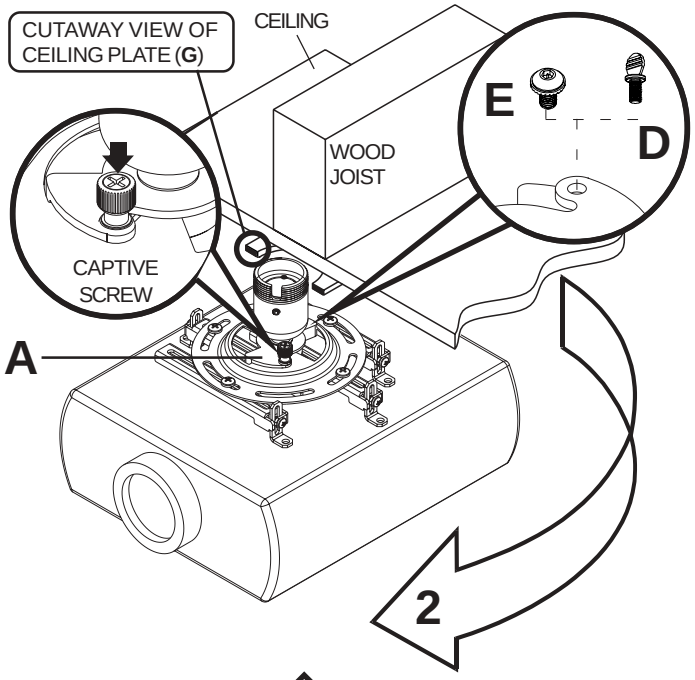

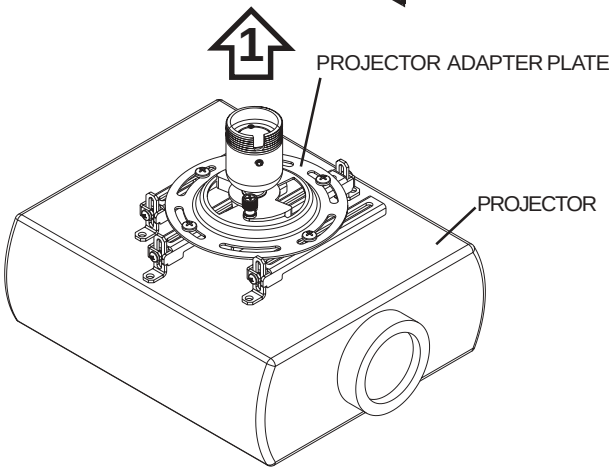

4 To adjust roll, pitch, and yaw loosen the set screw (shown below) using security allen wrench (**B**) or standard 4 mm allen wrench. You should be able to just slightly loosen the screw so that your adjustments can be set without having to hold the projector. Move projector to desired position and slowly tighten set screw.

Note: Be sure not to touch the projector while tightening the set screw. This may cause the image to be unaligned when you let go.

IMPORTANT: Allen wrench is your key for projector removal. Store it in a safe place.

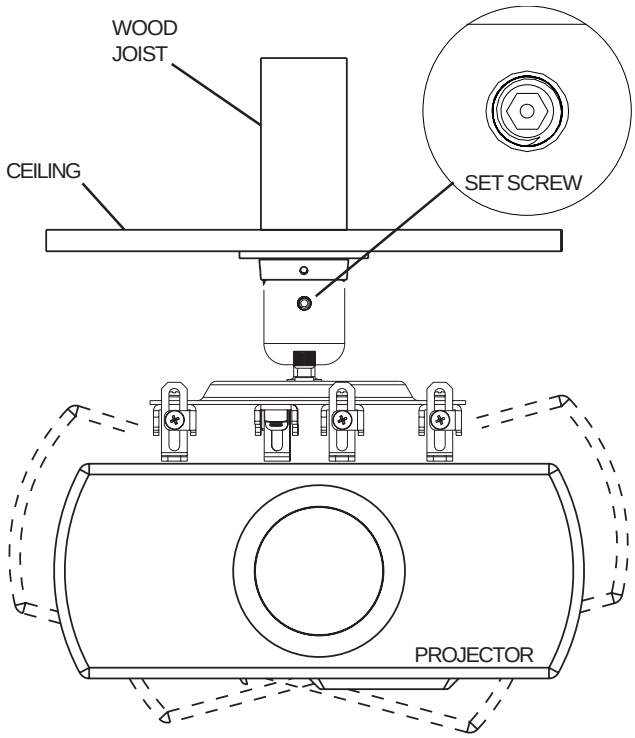

⚠ WARNING

- Do not lift more weight than you can handle! Use additional man power or mechanical lifting equipment to safely handle placement of the projector!

Q6FN TV

4130

4K ULTRA HD CONNECTED

PRODUCT HIGHLIGHTS

- Q | Color™
- Q | HDR™
- Q | Style™
- Smart TV with Bixby Voice

SIZE CLASS

82"	75"	65"	55"	49"
82Q6FN	75Q6FN	65Q6FN	55Q6FN	49Q6FN

The eye will savor the 2018 Q6. Welcome to the prestigious QLED lineup that tantalizes your vision with 1 billion+ shades of Q Color™ while Ambient Mode™ alters the screen into a spectacular visual display.

KEY FEATURES

Product Type
- QLED TV

Q Picture™
- Q | Color™
- Q | Contrast™
- Q | HDR™
- 100% Color Volume
- Auto Game Mode
- Q | Engine™
- Motion Rate 240
- Ultra Slim Array

Q Style™
- Clean Cable Solution®
- Wide Viewing Angle
- Ambient Mode™
- 360° Design
- Bezel Color: Eclipse Silver
- Stand Color: Eclipse Silver
- Bezel-free Design

Q Smart™ with Bixby Voice
- Universal Browse
- Connect & Share
- Samsung OneRemote[1]

Connections
- 4 HDMI Connections[2]
- 2 USB Connections
- LAN Port
- 802.11AC built-in Wi-Fi
- Bluetooth®
- RS232 Control Support (EX-Link)
- IP Control Support[3]
- Optical Audio Output Port

Audio
- Dolby® Digital Plus
- 40 Watt 2.1 Channel

Included Accessories
- Samsung OneRemote

Industry Certifications
- CTA 4K Ultra HD Connected

[1]Color may vary by model.
[2]HDMI—CEC (Consumer Electronics Control) facilitates convenient control functions with compatible devices.
[3]Requires third-party control system installation. See www.samsung.com/us/business/custominstall.

JUNE 14, 2019

SAMSUNG

SEE BACK FOR DETAILS

KEY FEATURES (page 1 of 2)

Q | Picture™

A TV for real-world conditions, even daytime TV looks brilliant in sun-drenched rooms. Over 1 billion color shades appear vibrant and real, thanks to our proprietary Quantum Dots reserved for our flagship QLED TVs.

Q | Color™
Push the boundaries of color with Quantum Dots and a billion+ shades, reserved for our flagship QLED TVs.[4]

Q | Contrast™
Experience dramatic depth from the darkest to brightest scenes.

Q | HDR™
See colors in movies and shows pop, just as the director intended—in stunning high dynamic range.

100% Color Volume
The secret behind color is that it may fade in bright scenes; QLED 100% Color Volume seemingly rejuvenates color in challenging content for a brilliant visual experience.

Auto Game Mode
Get a leg up on the competition—your console automatically optimizes TV settings for an enhanced gaming experience with minimal input lag and ultrafast refresh rates.

Q | Engine™
Heighten breathtaking color and detail with a powerful processor that optimizes your content for 4K clarity, color and HDR.

Motion Rate 240
Enjoy our absolute best moving picture resolution with remarkable refresh rate, processing speed and backlight technology.

Ultra Slim Array
The Ultra Slim Array dynamically fine-tunes the deepness of the blacks, to the brightness of the whites, for a picture with sensational contrast.

HDR Formats Supported
HDR10 (Static MetaData), HDR10+ (Dynamic MetaData), HLG (Hybrid Log Gamma). All Samsung 4K UHD TVs also meet the CTA HDR-Compatible Definition.

Q | Style™

A thoughtful design with a Clean Cable Solution® allows you to focus on a TV without the clutter.

Clean Cable Solution®
Neatly manages cords for a crisp, clean look.

Wide Viewing Angle
You thought the best seats were taken, but you're alright with wide angle viewing.

Ambient Mode™
Part TV, part chameleon. Ambient Mode on your QLED mimics your wall pattern for an astonishing visual effect when you're not watching TV.[5]

360° Design
The sleek, clean design looks attractive from any angle.

Q Smart™ with Bixby Voice

A revolutionary way to help find streaming and live TV shows with a universal guide, OneRemote and voice assistance.

Universal Browse
A revolutionary new way to help find streaming and live TV shows with a universal guide.

Connect & Share
Sync your TV to your compatible smartphone to access and control your content on the big screen.

Samsung OneRemote
OneRemote automatically detects and controls all your connected devices[6] and content.[1]

[4]Samsung QLED is a Quantum Dot-based TV.
[5]Background feature accuracy may vary based on TV location, dependent on wall designs, patterns and/or colors. SmartThings app on a mobile device (Android, iOS) is required for some functionality. App features may be limited at launch; please continue to check for updates.
[6]Compatible devices only.

SAMSUNG

KEY FEATURES (page 2 of 2)

Connections

HDMI
Enjoy higher-quality audio and video with an HDMI connection that transmits both signals over a single cable. Compatible with next-generation Ultra HD Blu-ray™ players and HDR content decoding. Includes 1 Audio Return Channel (ARC).

Wi-Fi
Enjoy your favorite on-demand content seamlessly through your existing network with built-in Wi-Fi (802.11AC).

Audio

Dolby® Digital Plus
Enjoy the ultimate digital sound quality on all your favorite movies, TV shows and streaming content. Dolby Digital Plus optimizes your entertainment experience with enhanced sound richness and clarity.

Included Accessories

Samsung OneRemote (TM-1850A)

Industry Certifications

4K Ultra HD Connected
All Samsung 2018 4K UHD and QLED televisions comply with the CTA 4K Ultra High-Definition Connected definition requirements. The trade organization known as the Consumer Technology Association (CTA™) is considered an industry authority on engineering standards for consumer electronics in the United States. Visit www.cta.tech for more information.

©2018 Samsung Electronics America, Inc. Samsung is a registered trademark of Samsung Electronics Co., Ltd. Samsung and Samsung SMART TV are both trademarks or registered trademarks of Samsung Electronics Co., Ltd. All other brand, product and service names and logos are marks and/or registered trademarks of their respective owners. Screen images are simulated. Some devices may require internet access. Apps may vary by product model. 4K UHD launch timing may vary by provider. Selection of 4K UHD content subject to individual content provider availability. Only select titles are available in 4K UHD. QLED televisions can produce 100% Color Volume in the DCI-P3 color space, the format for most cinema screen and HDR movies for television.

SAMSUNG

MODELS

MODEL: QN82Q6FN
ORDER CODE: QN82Q6FNAFXZA

SCREEN SIZE CLASS: 82"

SCREEN DIAGONAL MEASUREMENT: 81.5"

UPC CODE: 887276260228

COUNTRY OF ORIGIN: Mexico

DIMENSIONS (INCHES W x H x D):
- **TV WITHOUT STAND:** 72 x 41.6 x 2.4
- **TV WITH STAND:** 72 x 45.1 x 15.2
- **SHIPPING:** 79.4 x 48.1 x 11.6
- **STAND FOOTPRINT:** 2.5 x 10.3 x 15.2

WEIGHT (LB):
- **TV WITHOUT STAND:** 98.1
- **TV WITH STAND:** 100.8
- **SHIPPING:** 135.8

VESA SUPPORT: Yes (400mm x 400mm)

ACCESSORIES INCLUDED IN BOX:
- **REMOTE MODEL:** TM-1850A

NU7100 TV

4131

PRODUCT HIGHLIGHTS

- PurColor™
- Motion Rate 120
- HDR
- Smart TV

SIZE CLASS

75"	65"	58"	55"	50"	43"	40"
75NU7	65NU7	58NU7	55NU7	50NU7	43NU7	40NU7

4K ULTRA HD CONNECTED

Step up from Full HD with the clarity of the NU7100. Get 4X the resolution of Full HD, plus non-4K TV content is upscaled to 4K via a powerful UHD Engine™ This TV is a clear upgrade for your content.

KEY FEATURES

Product Type
- Ultra HDTV

4K UHD Picture
- PurColor™
- Essential Contrast
- HDR
- 4K UHD
- Game Mode
- UHD Engine™
- Motion Rate 120
- UHD Dimming
- Contrast Enhancer

Design
- Clean Cable Solution®[1]
- Slim Design
- Bezel Color: Charcoal Black
- Stand Color: Dark Gray

Smart TV
- Universal Browse
- Connect & Share

Connections
- 3 HDMI Connections[2]
- 2 USB Connections
- 1 Component Video Input (shared)
- 1 Composite Video Input (shared)
- 802.11n built-in Wi-Fi
- RS232 Control (requires adaptor)[3]
- Optical Audio Output Port

Audio
- Dolby® Digital Plus
- 20 Watt 2 Channel

Included Accessories
- Standard Remote

Industry Certifications
- CTA 4K Ultra HD Connected

[1]Clean Cable Solution® not available on the 40" & 43" NU7100 and NU7200 Series TVs.
[2]HDMI–CEC (Consumer Electronics Control) facilitates convenient control functions with compatible devices.
[3]Serial control requires USB adaptor provided by participating dealers and distributors.

JUNE 14, 2019

SAMSUNG

SEE BACK FOR DETAILS

NU7100 TV

KEY FEATURES (page 1 of 2)

4K UHD Picture

A quest for clarity beyond the standard was researched and developed, creating an engine that drives breathtaking resolution 4X more than Full HD.

PurColor™
Enjoy millions of shades of color, fine-tuned to create an incredibly vibrant picture.

Essential Contrast
Discern lifelike details in the brightest and dimmest scenes.

HDR
View stunning high-dynamic-range content with a TV designed to support HDR10+.

4K UHD
See what you've been missing on a crisp, clear picture that's 4X the resolution of Full HD.

Game Mode
Get a leg up on the competition, thanks to an optimized gaming experience with minimal input lag.

UHD Engine™
A powerful processor optimizes your content for 4K picture quality.

Motion Rate 120
Smooth action on fast-moving content.

UHD Dimming
Optimizes color, contrast and image detail for greater enjoyment of action movies and sports.

Contrast Enhancer
Experience a greater sense of depth with optimized contrast across all areas of the screen.

HDR Formats Supported
HDR10 (Static MetaData), HDR10+ (Dynamic MetaData), HLG (Hybrid Log Gamma). All Samsung 4K UHD TVs also meet the CTA HDR-Compatible Definition.

Design

From finish to function, a thoughtful design that amazes.

Clean Cable Solution®
Neatly manages cords for a crisp, clean look.

Slim Design
An elegant, slim design for a modern look you'll admire.

Smart TV

Access your streaming services all in one place using the Samsung Remote Control.

Universal Browse
An easy way to find streaming content and live TV shows with a single universal guide.

Connect & Share
Sync your TV to your compatible smartphone to access and control your content on the big screen.[4]

Samsung Remote Control
Adjusts TV functions and navigates Samsung Smart TV menus.[5]

[4]Some features vary. Bluetooth not available on NU7300 or NU7100 TVs.
[5]Compatible devices only. All devices must be on the same network, and internet connection is required.

SAMSUNG

NU7100 TV

KEY FEATURES (page 2 of 2)

Connections

HDMI
Enjoy higher-quality audio and video with an HDMI connection that transmits both signals over a single cable. Compatible with next generation Ultra HD Blu-ray™ players and HDR content decoding. Includes 1 Audio Return Channel (ARC).

Wi-Fi
Enjoy your favorite on-demand content seamlessly through your existing network with built-in Wi-Fi (802.11n).

Audio

Dolby® Digital Plus
Enjoy the ultimate digital sound quality on all your favorite movies, TV shows and streaming content. Dolby Digital Plus optimizes your entertainment experience with enhanced sound richness and clarity.

Included Accessories

Standard Remote (TM-1240A)

Industry Certifications

4K Ultra HD Connected
All Samsung 2018 4K UHD and QLED televisions comply with the CTA 4K Ultra High-Definition Connected definition requirements. The trade organization known as the Consumer Technology Association (CTA™) is considered an industry authority on engineering standards for consumer electronics in the United States. Visit www.cta.tech for more information.

©2018 Samsung Electronics America, Inc. Samsung is a registered trademark of Samsung Electronics Co., Ltd. Samsung and Samsung SMART TV are both trademarks or registered trademarks of Samsung Electronics Co., Ltd. All other brand, product and service names and logos are marks and/or registered trademarks of their respective owners. Screen images are simulated. Some devices may require internet access. Apps may vary by product model. 4K UHD launch timing may vary by provider. Selection of 4K UHD content subject to individual content provider availability. Only select titles are available in 4K UHD.

SAMSUNG

NU7100 TV

4131

MODELS

MODEL: UN65NU7100
ORDER CODE: UN65NU7100FXZA

SCREEN SIZE CLASS: 65"

SCREEN DIAGONAL MEASUREMENT: 64.5"

UPC CODE: 887276257532

COUNTRY OF ORIGIN: Mexico

DIMENSIONS (INCHES W x H x D):

- **TV WITHOUT STAND:** 57.4 x 33 x 2.4
- **TV WITH STAND:** 57.4 x 36.1 x 12.3
- **SHIPPING:** 63 x 38.2 x 7
- **STAND FOOTPRINT:** 1.9 x 7.8 x 12.3

WEIGHT (LB):

- **TV WITHOUT STAND:** 55.1
- **TV WITH STAND:** 56.2
- **SHIPPING:** 74.3

VESA SUPPORT: Yes (400mm x 400mm)

ACCESSORIES INCLUDED IN BOX:

- **REMOTE MODEL:** TM-1240A

SAMSUNG

NU7100 TV

4132

PRODUCT HIGHLIGHTS

- PurColor™
- Motion Rate 120
- HDR
- Smart TV

SIZE CLASS

75"	65"	58"	55"	50"	43"	40"
75NU7	65NU7	58NU7	55NU7	50NU7	43NU7	40NU7

4K ULTRA HD CONNECTED

Step up from Full HD with the clarity of the NU7100. Get 4X the resolution of Full HD, plus non-4K TV content is upscaled to 4K via a powerful UHD Engine™ This TV is a clear upgrade for your content.

KEY FEATURES

Product Type
- Ultra HDTV

4K UHD Picture
- PurColor™
- Essential Contrast
- HDR
- 4K UHD
- Game Mode
- UHD Engine™
- Motion Rate 120
- UHD Dimming
- Contrast Enhancer

Design
- Clean Cable Solution®[1]
- Slim Design
- Bezel Color: Charcoal Black
- Stand Color: Dark Gray

Smart TV
- Universal Browse
- Connect & Share

Connections
- 3 HDMI Connections[2]
- 2 USB Connections
- 1 Component Video Input (shared)
- 1 Composite Video Input (shared)
- 802.11n built-in Wi-Fi
- RS232 Control (requires adaptor)[3]
- Optical Audio Output Port

Audio
- Dolby® Digital Plus
- 20 Watt 2 Channel

Included Accessories
- Standard Remote

Industry Certifications
- CTA 4K Ultra HD Connected

[1]Clean Cable Solution® not available on the 40" & 43" NU7100 and NU7200 Series TVs.
[2]HDMI–CEC (Consumer Electronics Control) facilitates convenient control functions with compatible devices.
[3]Serial control requires USB adaptor provided by participating dealers and distributors.

JUNE 14, 2019

SAMSUNG

SEE BACK FOR DETAILS

NU7100 TV

4132

KEY FEATURES (page 1 of 2)

4K UHD Picture

A quest for clarity beyond the standard was researched and developed, creating an engine that drives breathtaking resolution 4X more than Full HD.

PurColor™
Enjoy millions of shades of color, fine-tuned to create an incredibly vibrant picture.

Essential Contrast
Discern lifelike details in the brightest and dimmest scenes.

HDR
View stunning high-dynamic-range content with a TV designed to support HDR10+.

4K UHD
See what you've been missing on a crisp, clear picture that's 4X the resolution of Full HD.

Game Mode
Get a leg up on the competition, thanks to an optimized gaming experience with minimal input lag.

UHD Engine™
A powerful processor optimizes your content for 4K picture quality.

Motion Rate 120
Smooth action on fast-moving content.

UHD Dimming
Optimizes color, contrast and image detail for greater enjoyment of action movies and sports.

Contrast Enhancer
Experience a greater sense of depth with optimized contrast across all areas of the screen.

HDR Formats Supported
HDR10 (Static MetaData), HDR10+ (Dynamic MetaData), HLG (Hybrid Log Gamma). All Samsung 4K UHD TVs also meet the CTA HDR-Compatible Definition.

Design

From finish to function, a thoughtful design that amazes.

Clean Cable Solution®
Neatly manages cords for a crisp, clean look.

Slim Design
An elegant, slim design for a modern look you'll admire.

Smart TV

Access your streaming services all in one place using the Samsung Remote Control.

Universal Browse
An easy way to find streaming content and live TV shows with a single universal guide.

Connect & Share
Sync your TV to your compatible smartphone to access and control your content on the big screen.[4]

Samsung Remote Control
Adjusts TV functions and navigates Samsung Smart TV menus.[5]

[4]Some features vary. Bluetooth not available on NU7300 or NU7100 TVs.
[5]Compatible devices only. All devices must be on the same network, and internet connection is required.

SAMSUNG

KEY FEATURES (page 2 of 2)

Connections

HDMI
Enjoy higher-quality audio and video with an HDMI connection that transmits both signals over a single cable. Compatible with next generation Ultra HD Blu-ray™ players and HDR content decoding. Includes 1 Audio Return Channel (ARC).

Wi-Fi
Enjoy your favorite on-demand content seamlessly through your existing network with built-in Wi-Fi (802.11n).

Audio

Dolby® Digital Plus
Enjoy the ultimate digital sound quality on all your favorite movies, TV shows and streaming content. Dolby Digital Plus optimizes your entertainment experience with enhanced sound richness and clarity.

Included Accessories

Standard Remote (TM-1240A)

Industry Certifications

4K Ultra HD Connected
All Samsung 2018 4K UHD and QLED televisions comply with the CTA 4K Ultra High-Definition Connected definition requirements. The trade organization known as the Consumer Technology Association (CTA™) is considered an industry authority on engineering standards for consumer electronics in the United States. Visit www.cta.tech for more information.

©2018 Samsung Electronics America, Inc. Samsung is a registered trademark of Samsung Electronics Co., Ltd. Samsung and Samsung SMART TV are both trademarks or registered trademarks of Samsung Electronics Co., Ltd. All other brand, product and service names and logos are marks and/or registered trademarks of their respective owners. Screen images are simulated. Some devices may require internet access. Apps may vary by product model. 4K UHD launch timing may vary by provider. Selection of 4K UHD content subject to individual content provider availability. Only select titles are available in 4K UHD.

SAMSUNG

NU7100 TV

4132

MODELS

MODEL: UN43NU7100
ORDER CODE: UN43NU7100FXZA

SCREEN SIZE CLASS: 43"

SCREEN DIAGONAL MEASUREMENT: 42.5"

UPC CODE: 887276257501

COUNTRY OF ORIGIN: Mexico

DIMENSIONS (INCHES W x H x D):

- **TV WITHOUT STAND:** 38.2 x 22.2 x 2.3
- **TV WITH STAND:** 38.2 x 25.1 x 8.2
- **SHIPPING:** 43.2 x 26.7 x 5.9
- **STAND FOOTPRINT:** 1.4 x 6.6 x 8.2

WEIGHT (LB):

- **TV WITHOUT STAND:** 21.2
- **TV WITH STAND:** 21.6
- **SHIPPING:** 30

VESA SUPPORT: Yes (200mm x 200mm)

ACCESSORIES INCLUDED IN BOX:

- **REMOTE MODEL:** TM-1240A

SAMSUNG

4136

FWD55X800E

55" diag 4K/UHD Pro Bravia Display

$1,459.99

U.S.List Price

UPC: 027242286047

Overview

4k resolution 55" display Featuring advanced image processing for exceptional picture quality. IP and serial control and HTML5 capabilty making this an ideal professional display

Highlights

* 4K 55"display
* Advanced image processing for exceptional picture quality
* WiFI connectivity
* RS232C
* Edge lit LED

Specifications

Contol Inputs Specifications	Detail
Network	RJ 45
Digital Inputs Specifications	**Detail**
HDMI	4
Display Specifications	**Detail**
Backlight Technology	Edge Lit LED
Display Technology	LCD
Image Aspect Ratio	16 by 9
Native Aspect Ratio	16 by 9
Resolution	3840 by 2160
Screen Size	55" (54.6")
Viewing Angle	178(89/89) degree
General Specifications	**Detail**
Dimensions (W x H x D)	48 5/8 x 28 1/4 x 2 1/4(9/16) inch
Wall/Arm Mount	VESA mount 300mm by 200mm
Weight	38.8 lb
Power Requirements Specifications	**Detail**

Power Consumption	149W
Power Requirements	120V

4136

Accessories

Supplied Accessories

Model:	Description:	U.S.List Price
	Power Cord	Pricing available upon request
	Voice Activated Remote	Pricing available upon request
	Operation manual	Pricing available upon request

This PDF was printed at sony.com/professional. Copyright 2011, Sony Electronics Inc All Rights Reserved.

SLIM LED

F6400 Slim LED TV

MODELS

75" CLASS UN75F6400

65" CLASS UN65F6400

60" CLASS UN60F6400

55" CLASS UN55F6400

50" CLASS UN50F6400

46" CLASS UN46F6400

40" CLASS UN40F6400

Smart Touch Remote Control

PRODUCT HIGHLIGHTS

Smart TV 2.0 with S-Recommendation

Dual Core Processor

Samsung Active 3D Full HD

Micro Dimming

KEY FEATURES

PICTURE QUALITY
- Full HD 1080p
- Micro Dimming
- Clear Motion Rate 480

SMART TV 2.0
- Dual Core Processor
- Smart Hub
- Full Web Browser
- S-Recommendation

SMART INTERACTION 2.0
- Motion Control Ready (limited gesture)*
- Voice Control

SMART CONNECTIVITY
- AllShare™
- Samsung Smart View (Clone View Only)

2D AND 3D IN FULL HD

SLIM DESIGN

CONNECTIONS
- 4 HDMI® Connections
- 3 USB Connections
- Wi-Fi® Built-in
- 1 Component in
- 1 Shared Composite in (AV)

AUDIO
- Dolby® Digital Plus, Dolby® Pulse
- DTS Premium Sound | 5.1™ decoding with DTS Studio Sound™processing

INCLUDES
- Smart Touch Remote Control
- 2 pairs of 3D Active Glasses (SSG-5100GB)

*Requires Skype™ Camera (sold separately)

F6400 Slim LED TV

PICTURE QUALITY

Full HD 1080p:
The realistic detail of Full HD images invites you to enjoy a viewing experience that redefines reality.

Micro Dimming:
Advanced picture contrast technology controls and enhances LED screen brightness, for even whiter whites and deeper blacks.

Clear Motion Rate 480:
A Clear Motion Rate of 480 is a remarkable level of motion-clarity. TVs with this CMR can display action-packed movement with in-depth sharpness, clarity and contrast. Clear Motion Rate was developed to accurately measure how well an LCD or LED TV can depict fast-moving images. Previously, motion-clarity was calculated by the frame refresh rate alone. But CMR offer a more complete measure by calculating 3 factors: frame refresh rate, image processor speed and backlight technology.

SMART TV 2.0:
The Samsung Smart TV finds the movies and TV shows you like – and more. Navigate within the 5 Smart Hub content panels. Easily discover movies, shows, and social posts with less searching and more watching.

Dual Core Processor:
Makes multitasking fast. Browse the web faster and quickly download Apps with this feature.

Smart Hub:
Our new interface organizes your entertainment and content into 5 convenient panels: On TV, Movies and TV Shows, Social, Apps, and a panel for your Photos, Videos and Music.

Full Web Browser:
All the benefits of Full Web Browsing, right on your TV. From social sites like Facebook® and Twitter® to news, weather, entertainment, blogs and more. Discover even more content possibilities with your Smart TV.

S-Recommendation:
Discover what you want to watch without surfing channels just by asking your TV. It will respond to your voice and find a selection of customized content options based on your preferences. Ask the TV for recommendations while you're watching TV, for example "what football games are on?" Or visit the full S-Recommendation hub to find new things to watch.

SMART INTERACTION 2.0:

Speaking into the built-in microphone on the Smart Touch Remote Control along with hand gestures* all control your TV in new and unexpected ways. Use S-Recommendation with voice interaction to ask your TV to find things to watch and get program suggestions.

2D AND 3D IN FULL HD:

Experience vivid, lifelike detail and clarity in both 2D and immersing 3D.

SMART CONNECTIVITY

AllShare™:
Samsung AllShare Play lets you and your family seamlessly share your content across your DLNA-connected Samsung devices, without the need for a network, cables or a connecting device.

Samsung Smart View (Clone View Only):
Stream content playing on your TV straight to your mobile device so you never miss a second of the action.

CONNECTIONS

HDMI®:
High-quality single-cable digital audio/video interface for connecting the TV to a digital cable box, satellite box, DVD and Blu-ray Disc® Player, PC computers, PC portable devices, new-generation tablets and devices featuring the HDMI® output. CEC capability permits the control of the TV and component from one remote control handset.

USB:
Connects a variety of computer, audio and video devices to the TV. USB movie capability allows the streaming of video from storage devices, cameras, camcorders and USB drives.

Wi-Fi Built-in:
No additional equipment is needed to connect with an existing wireless router in your home network and start accessing Samsung Apps or other Smart TV features.

Component in:
Analog video connection transmits HD RGB video using three RCA connections.

*Requires Skype™ Camera (sold separately)

SAMSUNG

F6400 Slim LED TV

Shared Composite in (AV):
Analog video connection transmits video using one RCA connection.

AUDIO

Dolby® Digital Plus / Dolby® Pulse:
Optimizes the TV sound quality when viewing and listening to Internet movies, Internet music and other content played back from wired or wireless mobile phones, PCs and tablet devices.

DTS Premium Sound | 5.1™ decoding with DTS Studio Sound™ processing:
Delivers immersive 5.1 surround sound from any DTS-encoded content and converts any two-channel audio content into a 5.1 DTS surround sound track for discrete surround sound playback. Experience surround sound with maximum bass response, dialog clarity and consistent volume levels from all your content, including Blu-ray™ movies, TV programming, streaming and games.

ACCESSORIES INCLUDED

Smart Touch Remote Control:
Enjoy all the benefits of a Universal Remote with the Smart Touch Remote Control. Use it to control multiple devices connected to your Smart TV, including the set top box, Blu-ray Disc ™ Player and Home Entertainment System. The innovative touch pad allows for quick and intuitive navigation, while the built-in microphone provides an alternative way to control your Smart TV with your voice.

3D Active Glasses:
When combined with Samsung 3D entertainment, 3D Active Glasses bring viewing to vivid life. Samsung's newest 3D Active Glasses offer even greater comfort over hours of viewing.

WARRANTY

1-year parts and 1-year labor warranty (90-days parts and labor for commercial use) with in-home service, backed by Samsung toll-free support.

Appearance and performance of products may vary. Some features may not be available in all areas. The guide is provided for dealer information purposes only. All information included herein is subject to change without notice. Samsung is not responsible for any direct or indirect damages, arising from or related to use of or reliance on the content.

©2013 Samsung Electronics America, Inc. Samsung is a trademark or registered trademark of Samsung Electronics Co., Ltd. Blu-ray Disc® and Blu-ray™ are trademarks of the Blu-ray Disc® Association. All other brand, product, service names and logos are marks and/or registered trademarks of their respective owners. Screen images are simulated. Some devices may require Internet access. Apps may vary by product model.

All other product and brand names are trademarks or registered trademarks of their respective owners.

Screen images are simulated.

SAMSUNG

F6400 Slim LED TV

MODELS
75" CLASS UN75F6400 – UPC 887276023397
Order code: UN75F6400AFXZA

65" CLASS UN65F6400 – UPC 887276023328
Order code: UN65F6400AFXZA
DIMENSIONS (WxHxD)
TV without stand: 57.9" x 33.4" x 2.0"
TV with stand: 57.9" x 36.8" x 14.8"
Package: 73.1" x 38.7" x 9.3"
WEIGHT
TV without stand: 59.7 lbs.
TV with stand: 65.7 lbs.
Package: 82.2 lbs.

60" CLASS UN60F6400 – UPC 887276023311
Order code: UN60F6400AFXZA
DIMENSIONS (WxHxD)
TV without stand: 54.0" x 31.2" x 1.9"
TV with stand: 54.0" x 34.7" x 14.8"
Package: TBD
WEIGHT
TV without stand: 50.3 lbs.
TV with stand: 56.2 lbs.
Package: 69.7 lbs.

55" CLASS UN55F6400 – UPC 887276020532
Order code: UN55F6400AFXZA
DIMENSIONS (WxHxD)
TV without stand: 49.2" x 28.5" x 1.9"
TV with stand: 49.2" x 31.8" x 12.1"
Package: 61.2" x 32.3" x 6.7"
WEIGHT
TV without stand: 37.3 lbs.
TV with stand: 40.8 lbs.
Package: 52.2 lbs.

50" CLASS UN50F6400 – UPC 887276023304
Order code: UN50F6400AFXZA
DIMENSIONS (WxHxD)
TV without stand: 44.7" x 26.0" x 1.9"
TV with stand: 44.7" x 29.3" x 12.1"
Package: 56.2" x 30.4" x 6.4"
WEIGHT
TV without stand: 30.6 lbs.
TV with stand: 34.2 lbs.
Package: 43.7 lbs.

46" CLASS UN46F6400 – UPC 887276020525
Order code: UN46F6400AFXZA
DIMENSIONS (WxHxD)
TV without stand: 41.7" x 24.3" x 2.0"
TV with stand: 41.7" x 27.7" x 12.1"
Package: 52.9" x 28.3" x 6.2"
WEIGHT
TV without stand: 25.4 lbs.
TV with stand: 28.9 lbs.
Package: 37.5 lbs.

40" CLASS UN40F6400 – UPC 887276020518
Order code: UN40F6400AFXZA
DIMENSIONS (WxHxD)
TV without stand: 36.5" x 21.4" x 2.0"
TV with stand: 36.5" x 24.3" x 10.4"
Package: 45.5" x 24.3" x 5.8"
WEIGHT
TV without stand: 19.4 lbs.
TV with stand: 21.6 lbs.
Package: 26.9 lbs.

SAMSUNG

JUNE 14, 2019

PRODUCT HIGHLIGHTS

LED TV

- Smart TV with Smart Content
- WiFi built-in
- LED picture quality

Entertainment is taken to new HD heights.

You'll never miss a moment with this 32" LED Smart HDTV. Smart Content includes new ways to explore and locate your favorite shows, movies games and more. A Full Web Browser with Wifi built-in and innovative apps made for TV, along with Signature Services, enhances your enjoyment. AllShare™ Play allows you to stream content from other devices and enjoy it on the big screen. The Wide Color Enhancer Plus provides vibrant natural-looking images and it's all in a sleek Ultra Slim Design.

UN32EH5300

32" Class (31.5" Diagonal) LED HDTV with 1080p Resolution

FEATURES

- Smart TV
- Smart Content with Signature Services
  - Family Story
  - Fitness
  - Kids Story
- Apps built for TV
- Web Browser & Search All
- Smart Hub
- WiFi built-in
- AllShare™ Play
- ConnectShare™ Movie

PICTURE QUALITY

- Clear Motion Rate 120
- Wide Color Enhancer Plus

AUDIO

- 10W x 2
- Dolby® Digital Plus/Dolby® Pulse
- SRS TheaterSound HD™

CONNECTIONS

- HDMI®: 3
- USB: 2
- Ethernet: 1
- Component in: 1
- Digital audio output: 1 optical

NET DIMENSIONS (WxHxD)

TV without stand: 29.1" x 17.5" x 3.7"
TV with stand: 29.1" x 19.6" x 7.6"

UPC

036725236929

4137a

LED TV SERIES

UN32EH5300 32" Class (31.5" Diagonal) LED HDTV with 1080p Resolution

FEATURES

Smart TV: Never miss a moment with Samsung Smart TV. Watch your favorite movies while you browse the web or explore the Smart Hub. Find more content you love by searching for shows, movies, and videos across vudu,™ Hulu Plus,™ YouTube™ and other digital content providers. Movies are handpicked for you through recommendations based on your viewing history and ratings. Access all your apps and download new ones, such as Netflix, Facebook,® YouTube,™ Hulu Plus,™ and Twitter™! Browse the web while you watch movies and TV shows, and enjoy TV while you chat with friends and family online, all on one screen. With Samsung Social TV, you can use Twitter,™ Facebook® and Google Talk™ to make comments, crack jokes and share all the fun.

Smart Content: With the introduction of the new Smart TV features, you can now enjoy a more fun and entertaining experience at home. The Smart TV offers an entire suite of easy-to-use, innovative features that entertain your family while instilling a healthy lifestyle. The features are designed to make learning fun again or to enjoy precious family moments by sharing photos and videos.

Signature Services

Family Story: Share your most precious family moments with Family Story on your new Samsung Smart TV. Family Story provides a quick way to upload photos to a gallery, even from your mobile device. You can also chat in real time, post messages and share important family events so everyone is kept up to date.

Fitness: Now you can maintain a healthy lifestyle with Samsung Smart TV's Fitness. Exercise at home through the video-on-demand service and manage your workout history. You can also track your progress by downloading the Exercise App onto your mobile device.

Kids Story: Combine home entertainment and education with Samsung's new Smart TV. Through this TV, we can recommend a variety of child-friendly programming so you can watch your child enjoy the pleasures of learning. The fun and exciting games will entertain your child and family for hours.

Apps built for TV: Download a wide range of apps for your Smart TV through the world's first TV app store. Samsung Apps has thousands of world-renowned apps, such as YouTube™ and Facebook,® and popular local ones available for downloading. Now you can enjoy your favorite apps from the comfort of your couch.

Web Browser: Easily stream your favorite movies and TV shows, download apps, shop online, browse the web, update your status on Facebook® and Twitter,™ and enjoy all of the benefits of full web browsing right on the big screen.

Search All: Quickly search for web content related to the program you're watching or access other features like VOD, apps and social networking services. You can even search USB drives or other external hard drives connected to your TV with ConnectShare™.

Smart Hub: Samsung Smart TV has retooled its Smart Hub feature to further expand its access to a world of online entertainment. Smart Hub enables multitasking and delivers an optimized viewing experience with single point access to the content that's the most important to you. It also allows you to search through hundreds of apps and use the fully optimized Web Browser for a seamless user experience.

WiFi built-in: With a wireless LAN built right into the TV, it is easier than ever to browse the web right on the big screen.

AllShare™ Play: Enables your TV to wirelessly access and stream content from any compatible device, like a PC. That means you can share movies, photos and music all through a single device — your TV. Now with the benefits of cloud technology, you can access and even share content when you're away from home.

ConnectShare™ Movie: Have movies and pictures on a USB drive? Now easily view that content right on the TV. Just plug the drive into the USB port and you are ready for a big screen experience.

PICTURE QUALITY

Clear Motion Rate (CMR): A comprehensive measure of a TV's ability to display images in motion. The higher the CMR, the better. Samsung achieves high CMR numbers based on panel processing advancements. See the picture quality difference for yourself.

Wide Color Enhancer Plus: Allows you to see picture color the way the director originally intended, brought to life on your screen to bring you exceptionally vibrant, yet natural-looking images and depicts subtle details and tones.

AUDIO

10 watts x 2 audio power stereo broadcast reception: Supports multi-channel sound (MTS) and second audio program (SAP) with 181-channel capacity.

Dolby® Digital Plus/Dolby® Pulse: An advanced surround sound audio processing feature designed to optimize the TV's sound quality when viewing and listening to Internet movies, Internet music and other content played back from wired or wireless mobile phones, PCs and tablet devices.

SRS TheaterSound HD™: A high-definition audio experience that delivers surround sound multi-channel content, using built-in TV speakers to significantly enhance both the depth and dimension of audio right through the TV. Enjoy a simulated surround sound experience!

CONNECTIONS

HDMI®: 3
HDMI® (High-Definition Multimedia Interface) is a convenient, high-quality single cable digital audio/video interface for connecting the TV to a digital cable box, satellite box, DVD/Blu-ray Disc® Player, PC computers, PC portable devices, new generation tablets and devices featuring the HDMI® output.

USB: 2
Universal Serial Bus (USB) is an industry standard for connecting a variety of computer, audio and video devices to the TV. USB movie capability allows the streaming of video from storage devices, cameras, camcorders and USB drives.

Ethernet: 1

Component in: 1

Digital audio output: 1 optical

SAMSUNG

4137a

LED TV SERIES 5

UN32EH5300 32" Class (31.5" Diagonal) LED HDTV with 1080p Resolution

NET DIMENSIONS & WEIGHT (WxHxD)

TV without stand: 29.1" x 17.5" x 3.7"
TV without stand weight: 12.8 lbs
TV with stand: 29.1" x 19.6" x 7.6"
TV with stand weight: 14.3 lbs

SHIPPING DIMENSIONS & WEIGHT (WxHxD)

Dimensions: 35.5" x 20.9" x 6.4"
Weight: 17.6 lbs

WARRANTY

1-year parts and 1-year labor warranty (90-days parts and labor for commercial use) with in-home service, backed by Samsung toll-free support.

ORDER CODE

UN32EH5300FXZA

UPC

036725236929

©2012 Samsung Electronics America, Inc. All rights reserved. Samsung is a registered trademark of Samsung Electronics Co., Ltd.

Design and specifications are subject to change without notice. Non-metric weights and measurements are approximate. HDMI, the HDMI logo and High-Definition Multimedia Interface are trademarks or registered trademarks of HDMI Licensing LLC.

ConnectShare, AllShare and Samsung Smart TV are trademarks of Samsung Electronics Co., Ltd. YouTube and the YouTube logo are trademarks of Google Inc.

All other product and brand names are trademarks or registered trademarks of their respective owners.

Screen images are simulated.

SAMSUNG

SONY

KDL-48W650D

48” class (47.5” diag) Built-in Wi-Fi® with Full HD TV

The best in entertainment. Access a world of movies, TV and apps[3], and enjoy every moment in picture quality that goes beyond Full HD. With X-Reality PRO™, you’ll enjoy stunning clarity, sharpness and a more refined picture.

Bullets

- Stunning Full HD with the clarity and sharpness of X-Reality PRO™
- Access YouTube™ and more with built-in Wi-Fi®[3]
- Living-room friendly, slim design
- Keep wires out of sight
- Precise motion clarity with Motionflow™ XR 240
- Enjoy pure, natural audio with smooth reproduction

Features

X-Reality PRO™: a cleaner, more refined picture

Enjoy outstanding clarity, sharpness and picture quality with everything you watch. Our combination of noise reduction technologies sharpen every scene, so the picture gleams with clear detail.

Enjoy stunning Full HD 1080p

Experience the detail of Full HD 1080p across all your entertainment. From Blu-ray Discs™ to your favorite TV shows, you can see it all in perfect clarity on the big screen with this Sony TV.

Great entertainment and apps wirelessly with built-in Wi-Fi®

Link up easily to your home network. With built-in Wi-Fi®, you’re free to go online and browse movies, enjoy video channels like YouTube™ and access services like Netflix and Hulu[3]. Best of all, you can stream entertainment from your wireless home network and the Internet and download a variety of apps without the clutter of cables.

Enjoy digital content from any USB

Enjoy your favorite digital content from any USB stick. Play music, video clips and view photo collections all through your TV with super multi-format USB play. Supporting a wide range of codecs, you can experience ultimate format versatility — simply plug in and you’re ready to go.

Incredibly slim

The screen has a narrow frame, accented with minimal bezels, so you can focus on your entertainment with near edge-to-edge pictures.

Cable management

Keep wires out of sight. All of your cables can be neatly arranged across the back of the TV and channeled into the stand, so everything looks tidy.

Motionflow™ keeps the action smooth

TV that keeps up with real life. Sony’s refresh rate technology (Motionflow™ XR 240) allows fast moving action sequences in sports and movies to be seen with precise motion clarity.

Clear Phase™ for smooth, balanced frequencies

SONY

Enjoy pure, natural audio with smooth, even reproduction of all frequencies. This TV uses a powerful computer model to analyze and compensate for inaccuracies in speaker response by "sampling" the speaker frequency with higher precision.

Your smartphone to the big screen

Screen mirroring lets you enjoy content and apps from your smartphone on your Sony TV[2]. Supersize all your memories and enjoy them on the big screen with family and friends.

Make the moment with Photo Sharing Plus

Let everyone share those special photo memories on the big screen. Up to ten people in the room can send photos and short video clips wirelessly from their smartphone straight to the TV to enjoy with a choice of your own optional background music[1]. Your TV even creates its own dedicated Wi-Fi® network — ideal for guests.

Specifications

Audio	
Bass/Treble/Balance	Balance
Speaker Configuration	2ch, Full Range (40 x 80 mm) x 2
Speaker Position	Down Firing
Speaker Type	Open Baffle
Audio Features	
Alternate Audio (Digital)	Yes
Audio Out	Fixed / Variable
Auto Mute (on no signal)	Yes
Clear Phase	Yes
Digital Out Format	Dolby Digital, DTS, PCM
Dolby®	Dolby Digital, Dolby Digital Plus, Dolby pulse
Headphone/Speaker Link	Yes
S-Master	S-Master Digital Amplifier
Sound Mode	Standard Music Cinema Game Sports
Convenience Features	
Auto Shut-off	Yes
BRAVIA® Sync™	Yes (including HDMI-CEC)
Channel Block (with password)	Analog & Digital
Multiple Language Display	English Spanish French
On/Off Timer	Yes
On-Screen Clock	Yes
Parental Control	Yes
Photo Frame Mode	Yes

Scene Select	Photo Music Cinema Game Graphics Sports Auto
Show/Hide Channels	Yes
Sleep Timer	Yes
USB Play	Yes (Supported File System: FAT16 / FAT32 / NTFS)
USB Play (Contents)	MPEG1 / MPEG2PS / MPEG2TS / AVCHD / MP4Part10 / MP4Part2 / AVI(XVID) / AVI(MotionJpeg) / WMV9 / MKV / WEBM / WAV / MP3 / WMA / JPEG
Design Features	
Stand Design	Black U Slate
Display Features	
Backlight Type	Direct LED
Dimming Type	Frame Dimming
Display Device	LCD
Display	
Aspect Ratio	16:9
Display Resolution	Full HD
Number of pixels(H x V)	1920 x 1080
Screen Size (cm)	120.9 cm
Screen Size (measured diagonally)	48" (47.6")
Viewing Angle (Right/ Left)	178 (89/89) degree
Viewing Angle (Up/ Down)	178 (89/89) degree
Energy Saving & Efficiency	
Backlight Off Mode	Yes
Dynamic Backlight Control	Yes
Power Consumption (On Mode) for Energy Star	57.00W
Power Consumption (Standby Mode) for Energy Star	0.50W
Power Saving Modes	Yes
General Features	
Closed Captions (CC)	Analog Digital
Demo Mode	Yes
Hotel Mode Menu	Yes
Inputs and Outputs	
AC Power Input	AC Adapter (Bottom)
Analog Audio Input(s) (Total)	1 (Bottom)
Audio Out	1 (Side / Hybrid w/HP and SubWoofer Out)
Component Video (Y/ Pb/Pr) Input(s)	1 (Bottom Mini Video Conversion Hybrid w/ Composite)
Composite Video Input(s)	1 (Bottom Mini Video Conversion Hybrid w/ Component)
Digital Audio Output(s)	1 (Rear)
Ethernet Connection(s)	1 (Bottom)
HDCP	HDCP1.4
HDMI PC Input Format	640 x 480 (31.5kHz, 60Hz) 800 x 600 (37.9kHz, 60Hz) 1024 x 768 (48.4kHz, 60Hz) 1280 x 768 (47.4kHz, 60Hz) 1280 x 768 (47.8kHz, 60Hz) 1360 x 768 (47.7kHz, 60Hz) 1280 x 1024 (64.0kHz, 60Hz) 1920 x 1080 (67.5kHz, 60Hz)
HDMI Signal	1080p (30,60Hz), 1080/24p, 1080i (60Hz), 720p (30,60Hz), 720/24p, 480p, 480i
HDMI™ Connection(s) (Total)	2 (1 Rear/1 Side)
Headphone Output(s)	1 (Side / Hybrid w/HP and Subwoofer Out)
RF Connection Input(s)	1 (Side)
Subwoofer Out	1 (Side / Hybrid w/HP and SubWoofer Out)

SONY

USB 2.0	2 (Side)
Network Features	
Home Network	MPEG1 / MPEG2TS / AVCHD / MP4 / AVI / WMV / LPCM / MP3 / WMA / JPEG
Internet Browser	Yes (Opera) (OTA) (Except US and some countries)
Opera Apps (System)	Yes
Photo Sharing Plus / Photo Share	Yes
Screen mirroring(Miracast)	Yes
Wi-Fi Certified	Yes
Wi-Fi Direct	Yes
Wi-Fi Frequency	2.4GHz only
Wi-Fi Standard	b/g/n
Wireless LAN	Integrated
Annual Power Consumption	108kWh/Year
Power	
Power Consumption (in Operation) max.	75W
Power Consumption (in Standby)	120V : 0.50W / 240V : 0.50W
Power Requirements (voltage)	DC 19.5V
Regulation and Standards Compliance	
VESA® Hole Pitch	7 7/8 x 7 7/8 in (200 x 200 mm)
VESA® Hole Spacing Compatible	Yes
Service and Warranty Information	
Limited Warranty Term	12 months
TV System	
Channel Coverage (Analog)	VHF: 2-13 / UHF: 14-69 / CATV: 1-135
Channel Coverage (Digital Cable)	CATV: 1-135
Channel Coverage (Digital Terrestrial)	VHF: 2-13 / UHF: 14-69
Color System	NTSC
Memory	4G
Number of Tuners (Terrestrial/Cable)	1 (Digital / Analog)
OS	Linux
TV System (Analog)	M
TV System (Digital Cable)	Clear QAM
TV System (Digital Terrestrial)	ATSC
Video	
Video Signal	1080p (60 Hz) 1080i (60 Hz) 720p (60 Hz) 480p 480i
Video Features	
24p True Cinema™ Technology	Yes
4:3 Default	Yes
Advanced Contrast Enhancer (ACE)	Yes
Auto Wide	Yes
Blinking Type	Frame Blinking
LED Motion Mode	Yes
Live Color™ Technology	Yes
Motionflow™ XR Technology	Motionflow XR 240
Picture Mode	Vivid Standard Custom Photo-Vivid Photo-Standart Photo-Custom Cinema Game Graphics Sports
Video Processing	X-Reality PRO
Wide Mode	Wide Zoom Normal Full Zoom Normal / Full1 / Full2 for PC
Weights and Measurements	
Dimensions (Approx.)	TV only: 43 x 25 3/8 x 2 5/8(3/8) in (1092 x 643 x 66(8.9) mm) TV with stand: 43 x 27 x 9 3/8 in (1092 x 683 x 235 mm)
Packaging (Approx.)	Carton dimensions: 46 1/2 x 29 5/8 x 6 3/8 in (1180 x 752 x 161 mm) Carton weight: 30.9 lbs (14 kg)
Weight (Approx.)	TV only: 22.5 lbs (10.2 kg) TV with stand: 23.6 lbs (10.7 kg)
Accessories	
Supplied Accessories	Mini-plug Video Adapter Remote Control (RMT-TX102U) Batteries (R03) AC Power Adaptor (ACDP-085S03, ACDP-085E03) AC Power Cord Spec: (Inlet C7, US plug type, 2pin, straight shape) Operating Instructions Quick Setup Guide / Supplement CUE (GA) Table Top Stand (Separate, assemble required)

4142

DARTBOARD WITH SOFT TIP DARTS

Standing Electronic Dartboard with 24 Games, 132 Variations, and 6 Soft-Tip Darts Included

Turn your rec room into an arcade with this Arachnid Arcade Style Cabinet with Cricket Pro 650 Electronic Dart Game. This black freestanding cabinet with Bullshooter logo houses the feature-packed CricketPro 650 Electronic Dart Game, which includes a regulation 15.5" target area and 24 games with 132 options, including 5 cricket games. The LED display keeps score for up to eight players at one time, so you can have plenty of friends over for arcade-style fun. The cabinet has convenient storage with three shelves plus additional storage space under the lid for all of your darting accessories. Assembly required. Dartboard accessories included

- Features 8-player cricket with 24 games and 132 options, including 5 Cricket games, and an 8-player score display
- Dartboard has a regulation 15.5" target area as well as tournament spider and trademarked tournament colors
- Micro-thin segment dividers dramatically reduce bounce outs while the Nylon Tough segments improve playability and durability
- Dartboard features a voice prompt for players to throw, a solo play option, a player handicap feature and sleep mode
- Includes 6 soft-tip darts with extra tips, an AC adapter and mounting hardware for assembly

Specifications:

Electrical: 110V

Brand & Model: Arachnid- E650FS-BK2

Material: Wood, Dark Black

Features: Darts Included, 4 player Display

Assembled Product Dimensions (12.50 “L x 23.50 “W x 85”H)

SOURCE: https://www.walmart.com/ip/Arachnid-Cricket-Pro-650-Standing-Electronic-Dartboard-with-24-Games-132-Variations-and-6-Soft-Tip-Darts-Included/5358921

4144

FOOSEBALL GAMING

SKU: 55-699

Brand: Berner Billiards

Berner Billiards Premium Foosball Table in Black finish. This table features telescoping safety rods which do not protrude out the opposite side. Great if you have young children!

- Black mica cabinet
- One or Three Man Goalie Play - You Decide During Game Set Up
- 15.7 mm Telescopic Rods
- 1-3/16" thick cabinet
- 3/8" Thick non-glare playfield
- Large rubber grips
- Solid hardwood legs with support rod
- 5" Leg Levelers
- Reinforced cabinet
- Manual Scorers
- Includes 4 Balls
- This table is commercial grade
- Assembly Required

Regulation size: 55"L x 29"W x 35H"
Weight 180 pounds

SOURCE: http://www.gametables4less.com/productcart/pc/Berner-Premium-Foosball-Table-in-Black-with-both-1-3-Man-Goalie-br-FREE-SHIPPIING-16p2592.htm

JUNE 14, 2019

4228

FIRST AID KIT, WALL MOUNTED

This compact 125-piece first aid kit meets OSHA requirements for a 25 employee job site or office. The kit contains an assortment of first aid items to quickly treat minor injuries on the job. All items are packaged in a clearly marked wall-mountable plastic case with handle. Meets ANSI Z308.1 Standard.

Dimensions: 7" w x 7.5" h x 3" d

125-Piece OSHA 10-Person First Aid Kit Contents:

- 20 Adhesive Bandage 3/4" x 3"
- 20 Adhesive Bandage 1" x 3"
- 2 Butterfly Closures
- 2 Fingertip Bandages
- 1 Triangular Bandage 40" x 40" x 56"
- 2 Gauze Pad 4" x 4" 2-Piece
- 4 Gauze Pad 3" x 3" 2-Piece
- 4 Gauze Pad 2" x 2" 2-Piece
- 1 Gauze Roll 3”
- 1 Combo Trauma Pad 5" x 9"
- 10 Cotton Top Applicators
- 1 Adhesive Tape 1/2" x 5 yds.
- 6 Burn/First Aid Cream
- 6 Sting Relief Pads
- 10 Alcohol Cleansing Pads
- 20 Antiseptic Wipes
- 1 Tweezers
- 4 Exam Gloves - 2 Pair
- 1 CPR Face Shield
- 1 First Aid Guide
- 4 Finger Splints
- 2 Safety Pins
- 1 Splinter Remover (Lancets)
- Packaged in a Hard Plastic Case with Handle.

SOURCE: https://www.firesupplydepot.com/25-person-osha-first-aid-kit-125-piece.html

4229

SDS COMPLIANCE CENTER

Keep Safety Data Sheets readily available for quick, easy access.

- Meets OSHA Right-to-Know requirements.
- **Standard** – Includes 2" SDS binder, 36" binder security chain, wire basket and mounting hardware.

MODEL NO.	DESCRIPTION	SIZE H x W x D	PRICE EACH	
			1	3+
S-15383	Standard	20 x 14 x 4"	$75	$70

DIMENSIONS:

- Ring Diameter: 1 1/2"

NOT INCLUDED:

- SDS pages

SOURCE:
https://www.uline.com/Signin/SignIn?reloc=%2fProduct%2fProductDetail%3fmodel%3dS-15383%26ref%3d0%26addfav%3dY

4234

Cabela's®

Commercial Grade 10” Slicer

Cabela’s Item Number: 54-1006

Please read this manual in its entirety prior to using this product.
Visit www.cabelas.com or call for assistance 1-800-237-4444.

JUNE 14, 2019

WARNING

Read carefully and understand all instructions before operating. Failure to follow the safety rules and other basic safety precautions may result in serious personal injury. Save these instructions in a safe place and on hand so that they can be read when required.

	WARNING! Before cleaning, assembling or disassembling the MEAT SLICER, check the plug and make sure PLUG IS REMOVED FROM THE OUTLET/POWER SOURCE!
SHARP BLADE	**WARNING!** HANDLE CAREFULLY! KEEP FINGERS AWAY FROM BLADE. NEVER USE FINGERS TO FEED FOOD BY HAND. ALWAYS USE THE FOOD Carriage! Always use the meat slicer completely assemble with food carriage and food pusher. If possible use protective cut-resistant gloves whenever handling the blade.

IMPORTANT

Before using your 10" Commercial Grade Meat Slicer for the first time, wash all parts thoroughly, taking particular care to remove all grease and oil from surface. Dry all parts thoroughly before reassembling. (*REFER TO CLEANING & MAINTENANCE SECTION OF MANUAL ON PAGE 8)*

OPERATING YOUR 10" MEAT SLICER

Now that your Cabela's 10" Commercial Grade Meat Slicer is fully assembled and ready to use, it is time to slice your favorite meats, cheeses and vegetables. Be sure to read and fully understand the General Safety Rules at the beginning of this manual before you start.

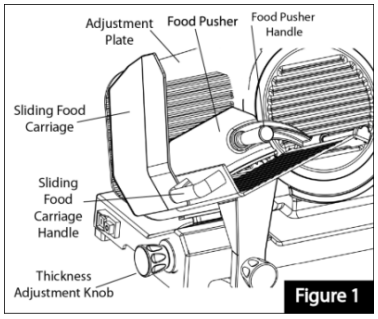

Figure 1

1. Place the Meat Slicer on a flat stable surface. Plug the appliance into a properly rated electrical outlet (120V AC, 15 Amps).
   NOTE: Be sure to remove protective blade guards from the edge of the **Blade**[9] before plugging slicer into outlet. These are used for shipping only.
2. Place food on to the **Sliding Food Carriage**[5] between the **Adjustment Plate**[13] and the **Food Pusher**[12] . To avoid injury, **ALWAYS** use the **Food Pusher Handle**[6]. **(Fig. 1)**
3. Turn the **Thickness Adjustment Knob**[2] to set the **Adjustment Plate**[13] for the desired cutting thickness. Turn clockwise for thinner cuts, counter-clockwise for thicker slicing. **(Fig. 1)**

5030

Pyxis MedStation 4000 system typical configuration

TYPICAL COMPONENTS (MODULES) FOR EQUIPMENT #5030

Pyxis MedStation 4000 mains

Pyxis MedStation 4000
6-drawer main

22.8" W x 27" D x 54.3" H

Pyxis MedStation 4000
4-drawer main plus bin

22.8" W x 27" D x 55" H

Pyxis MedStation 4000
2-drawer main

22.8" W x 27" D x 27.8" H

Pyxis MedStation 4000
0-drawer main

22.8" W x 27" D x 11.5" H

5030

Pyxis MedStation 4000 auxiliaries

Pyxis MedStation 4000
7-drawer auxiliary

22.8″ W x 27″ D x 47″ H

Pyxis MedStation 4000
half-height column auxiliary
(2 doors)

31″ W x 28″ D x 43″ H

Pyxis MedStation 4000
single column auxiliary
(4 doors)

31″ W x 28″ D x 79.5″ H

Pyxis MedStation 4000
double column auxiliary
(8 doors)

52″ W x 28″ D x 79.5″ H

Related products

Pyxis SMART Remote Manager
Pyxis Remote Manager
(refrigerator not included)

Pyxis MedStation 4000 drawers

CUBIE® pockets

Carousel drawer

Matrix drawer with optional return bin

MiniDrawer *(I-6)*

MiniDrawer *(I-18)*

2D barcode scanner included

Pyxis MedStation 4000 consoles

Pyxis MedStation 4000
console and cabinet

30″ W x 24″ D x 49″ H

Pyxis MedStation 4000
workstation

16.25″ W x 8.25″ D x 17.5″ H

5824g

SonoSite Edge II

TAKING TRANSDUCER DURABILITY TO THE ARMORED LEVEL

How often do transducer cables get rolled over, stepped on or twisted? Talking to our customers, the response is "all the time," "too often to count," or simply "a lot."

With an embedded metal jacket, armored cables protect your transducers from these common scenarios. By safeguarding electrical connections inside, armored cables help maintain image quality over the life of your transducer.

Standard Cable

Armored Cable

ULTRASOUND FOR CLARITY AND CONFIDENCE.

5
TECHNOLOGY DRIVEN
5-YEAR STANDARD WARRANTY
MADE IN THE USA

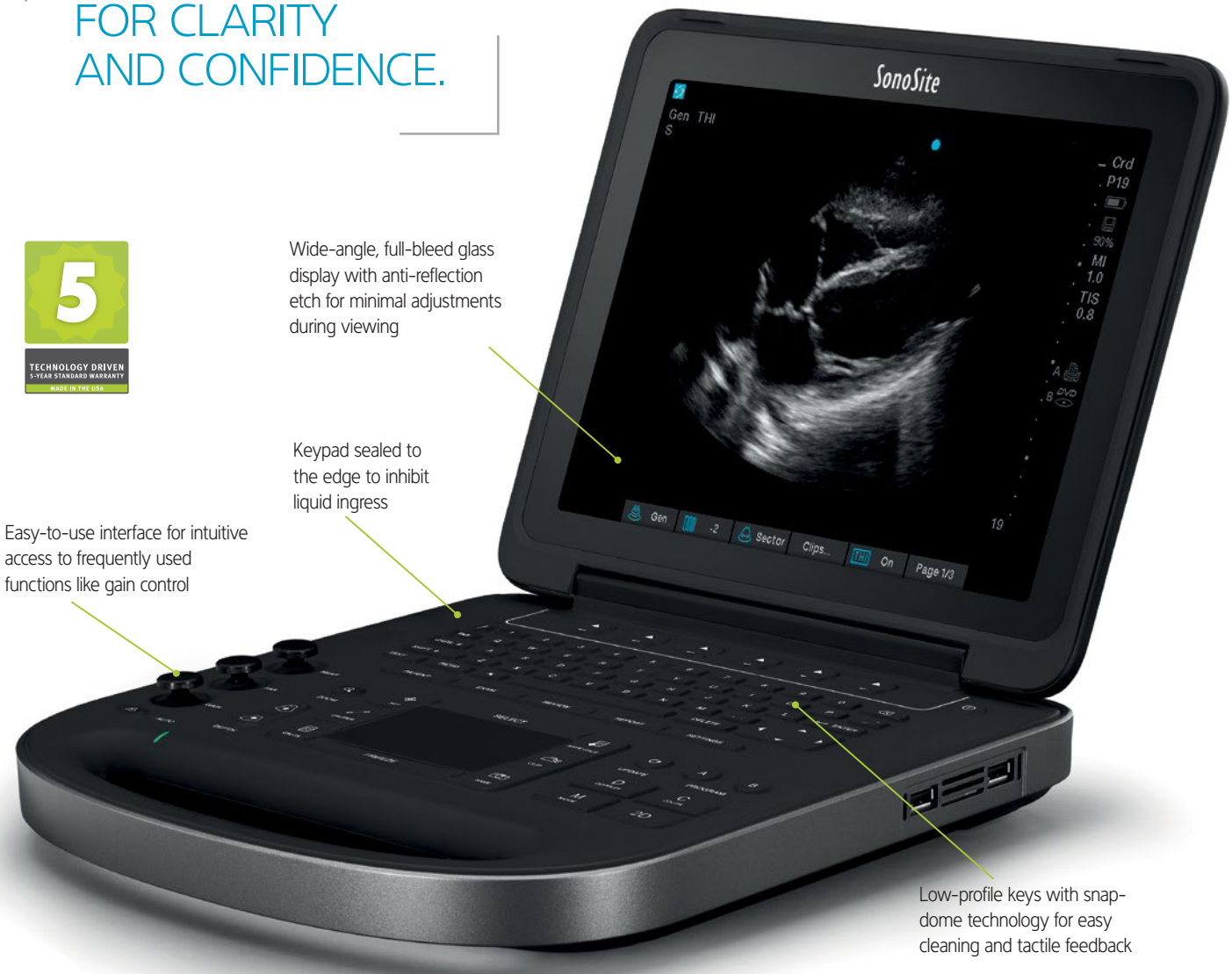

Wide-angle, full-bleed glass display with anti-reflection etch for minimal adjustments during viewing

Keypad sealed to the edge to inhibit liquid ingress

Easy-to-use interface for intuitive access to frequently used functions like gain control

Low-profile keys with snap-dome technology for easy cleaning and tactile feedback

JUNE 14, 2019

5824g

FUJIFILM
Value from Innovation

SonoSite Edge II

SONOSITE EDGE II TRANSDUCERS

L38xi ●●

10-5 MHz Linear

Applications:
lung, nerve, small parts, arterial, venous

Scan depth: 9 cm

HFL38xi ●

13-6 MHz Linear

Applications:
breast, lung, musculoskeletal, nerve, ophthalmic, small parts, arterial, venous

Scan depth: 6 cm

HFL50x ●

15-6 MHz Linear

Applications:
breast, musculoskeletal, nerve, small parts

Scan depth: 6 cm

L25x ●●

13-6 MHz Linear

Applications:
lung, musculoskeletal, nerve, superficial, arterial, venous, ophthalmic

Scan depth: 6 cm

C11x

8-5 MHz Curved

Applications:
abdominal, neonatal, nerve, arterial, venous, cardiology (vet)

Scan depth: 13.5 cm

rC60xi ●●●

5-2 MHz Curved

Applications:
abdominal, musculoskeletal, nerve, ob, gyn

Scan depth: 30 cm

ICTx ●

8-5 MHz Curved

Applications:
ob, gyn

Scan depth: 13 cm

rP19x ●●

5-1 MHz Phased

Applications:
abdominal, cardiology, lung, ob, orbital, TCD

Scan depth: 35 cm

P10x ●

8-4 MHz Phased

Applications:
ped. abdominal, ped. cardiology, neonatal head

Scan depth: 14 cm

HSL25x

13-6 MHz Linear

Applications:
lung, musculoskeletal, nerve, superficial, arterial, venous, ophthalmic

Scan depth: 6 cm

TEExi

8-3 MHz Multi

Applications:
adult cardiology, multiplane transesophageal 180° rotation of the imaging plane, providing a 360° field of view

Scan depth: 18 cm

L52x (Vet) ●

10-5 MHz Linear

Applications:
musculoskeletal, ob, arterial

Scan depth: 15 cm

C35x ●

8-3 MHz Curved

Applications:
abdominal, musculoskeletal, nerve, ob, spine

Scan depth: 15 cm

C8x ●

8-5 MHz Curved

Applications:
prostate

Scan depth: 11.5 cm

P11x

10-5 MHz Phased

Applications:
venous, vascular

Scan depth: 12 cm

- ● **DirectClear Technology.**
- ● **Optional Armored Cable.**
- ● **Needle guides and kits available.**
- ● **A transverse needle guide available.**

5824g

SYSTEM SPECIFICATIONS

System weight	9.21 lbs/4.18 kg with battery
Dimensions	12.8" x 12.1" x 2.5"/ 32.6 cm x 30.7 cm x 6.4 cm (L x W x H)
Display	12.1"/30.7 cm diagonal LCD (NTSC or PAL) with chemically-etched glass layer
Viewing Angles	85 degrees up/down/left/right
Architecture	All-digital broadband
Dynamic range	Up to 165 dB
Gray scale	256 shades
HIPAA compliance	Comprehensive tool set

IMAGING MODES

2D / Tissue Harmonic Imaging / M-Mode

Velocity Color Doppler / Color Power Doppler

PW, PW Tissue Doppler and CW

Doppler angle, correct after freeze

IMAGE PROCESSING

SonoADAPT™ Tissue Optimization

SonoHD2™ Imaging Technology

Dual Imaging, Duplex Imaging, 2x pan/zoom capability, Dynamic range and gain

ColorHD™ Technology

STEEP NEEDLE PROFILING

C35x - Nerve, MSK, Spine

HFL38xi – Nerve, MSK, Breast, Small Parts, Arterial, Venous

HFL50x – Nerve, MSK, Breast, Small Parts

L25x – Nerve, MSK, Arterial, Venous

HSL25x – Nerve, MSK, Arterial, Venous

L38xi – Nerve

rC60xi – Nerve, MSK

USER INTERFACE AND REMAPPABLE CONTROLS

Softkeys to drive advanced features

Programmable A and B keys: each can be assigned by the user for increased ease of use

Low profile keyboard, sealed completely to edge for maximum infection control

Track pad with select key for easy operation and navigation

Doppler controls: angle, steer, scale, baseline, gain and volume

Image acquisition keys: review, report, clip store, save

Dedicated AutoGain and exam keys to allow quick activation

Color controls: size/position, angle, scale, baseline and invert

TRANSDUCERS

Broadband/Multifrequency:

DirectClear Technology (rC60xi, rP19x)

Armored Cable Technology (Optional on rC60xi, rP19x, L38xi, L52x)

Linear Array, Curved Array, Phased Array, Multiplane TEE and Micro-Convex

Center line marker for linear transducers

Exam types: abdominal, breast, cardiology, gyn, lung, musculoskeletal, neonatal, nerve, ob, ophthalmic, orbital, small parts, spine, superficial, TCD, arterial, venous

DURABILITY

Drop-tested at 3 feet/91.4 cm

APPLICATION SPECIFIC CALCULATIONS

OB/Gyn/Fertility: Diameter/ellipse measurements, volume, ten follicle measurements, estimated fetal weight, established due date, gestational age, last menstrual period, growth charts, user-defined tables, multiple user-selectable authors, ratios, amniotic fluid index, patient report, humerus and tibia measurement and charts, HR, Fetal HR, MCA, UMBA, Ovarian Volume, Follicle Volume, Uterine Volume, Endometrial thickness

Arterial: Diameter/ellipse/trace measurements, volume, volume flow, percent diameter and area reduction, Lt/Rt CCA, ICA, ECA, ICA/CCA ratio, peak trace, ICA/CCA ratio, patient report, HR, Bulb, Vertebral Artery, TAP

Cardiac: LVO, Automated Cardiac Output package and patient report including: ventricular, aortic and atrial measurements; ejection fraction, volume measurements, Simpson's rule, continuity equation, pressure half-time and cardiac output; IVC Collapse Ratio, LA/RA Volume, TAPSE, PA AT, TV E, A, PHT, TVI, MV time, Pulm Veins, LV Mass, TDI e', TDI a', HR, dP:dT, Qp/Qs

Ability to view EF and FS simultaneously

Transcranial Doppler (TCD): Complete TCD package including Time Average Peak (TAP)

ONBOARD IMAGE AND CLIP STORAGE/REVIEW

16GB internal flash memory storage capability

Storage support for up to 500 patients

Clip Store capability (maximum single clip length: 60 seconds)

Clip Store capability via either number of heart cycles (using the ECG) or time base. Maximum storage in ECG beats mode is 10 heart cycles. Maximum storage in time base mode is 60 seconds

Start/Stop toggle capability for clips

USB Auto Export

Encryption of patient data on system

Cine review up to 255 frame-by-frame images

MEASUREMENT TOOLS, PICTOGRAMS AND ANNOTATIONS

2D: Distance calipers, ellipse and manual trace

Doppler: Velocity measurements, pressure half time, auto and manual trace

M-Mode: Distance and time measurements, heart rate calculation

User-selectable text and pictograms

User-defined, application-specific annotations

Biopsy guidelines

CONNECTIVITY (EXTERNAL DATA MANAGEMENT)

SonoSite Patient Data Archival Software (PDAS) for Wireless/Wired Image, Report Management

Q-path ultrasound management system

DICOM® Image Management (TCP/IP): Print and Store, Modality Work List, Storage Commit: Modality, Perform, Procedure Step

PC Workstation Image Management (TCP/IP, USB): Direct writing capability to USB 2.0 mass storage removable media (PC and MAC compatible)

Supported export formats: MPEG-4 (H.264), JPEG, BMP, and HTML

CONNECTIVITY (SYSTEM PORTS)

Ports, External Video/Audio:

USB ports (2)

ECG input (1)

Integrated Speakers

With Mini-dock:

S-Video (in/out) to VCR for record and playback

DVI output

Composite video output (NTSC/PAL) to VCR or video printer

Audio output

Ethernet or Wireless Image/Data Transfer

USB Port (1)

RS-232 Transfer

POWER SUPPLY

System operates via battery or AC power

Rechargeable lithium-ion battery

AC: universal power adapter, 100-240 VAC, 50/60 Hz input, 15 VDC output

Less than 25 sec. from power-on to scanning

EDGE II STAND AND PERIPHERALS

Mini-dock, transducer and gel holders

AC Cord Retainer

Larger baskets with easy removal feature for cleaning

Casters to prevent accidental locking

Optional Triple Transducer Connect (TTC) to quickly activate transducers electronically

Optional foot switch

Optional PowerPark and PowerPack

OPTIONAL PERIPHERALS

Printers: Medical-grade black and white or color

External data input devices: Bar code reader

ECG Slave Cable and Adapter Kit: Used to interface with external ECG monitors

ECG module: 3-lead ECG – works with standard ECG leads and electrodes

Bluetooth is a registered trademark of Bluetooth SIG, Inc.

Mac is a trademark of Apple Inc., registered in the U.S. and other countries.

DICOM is the registered trademark of the National Electrical Manufacturers Association for its standards publications relating to digital communications of medical information.

FUJIFILM
Value from Innovation

FUJIFILM SonoSite, Inc.
Worldwide Headquarters
21919 30th Drive SE, Bothell, WA 98021-3904
Tel: +1 (425) 951-1200 or +1 (877) 657-8050
Fax: +1 (425) 951-6800
www.sonosite.com/products/edgeii

SonoSite Worldwide Offices

FUJIFILM SonoSite Australasia Pty Ltd: Australia 1300-663-516
FUJIFILM SonoSite Australasia Pty Ltd: New Zealand 0800-888-204
FUJIFILM SonoSite Brazil . . . . . +55 11-5574-7747
FUJIFILM SonoSite Canada Inc. . . . . +1 888-554-5502
FUJIFILM (China) Investment Co., Ltd . . . . . +86 21-5010-6000
FUJIFILM SonoSite GmbH – Germany . . . . . +49 69-80-88-40-30
FUJIFILM SonoSite, Inc. – USA . . . . . +1 425-951-1200
FUJIFILM SonoSite India Pvt Ltd. . . . . +91 124-288-1100
FUJIFILM SonoSite Italy S.r.l. . . . . +39 02-9475-3655
FUJIFILM SonoSite Iberica SL – Spain . . . . . +34 91-123-84-51
FUJIFILM SonoSite Korea Ltd . . . . . +65 6380-5589
FUJIFILM SonoSite Ltd – United Kingdom . . . . . +44 1462-341151
FUJIFILM SonoSite SARL – France . . . . . +33 1-82-88-07-02

SONOSITE, the SONOSITE logo and EDGE II are trademarks and registered trademarks of FUJIFILM SonoSite, Inc. in various jurisdictions. FUJIFILM is a trademark and registered trademark of FUJIFILM Corporation in various jurisdictions. All other trademarks are the property of their respective owners. Copyright © 2016 FUJIFILM SonoSite, Inc. All rights reserved. Subject to change.

JUNE 14, 2019

MKT02792 Rev D 10/2016

7112

EXERCISE MATS & WALL HANGERS TYPICAL

WILL REQUIRE BACKING FOR SUPPORT

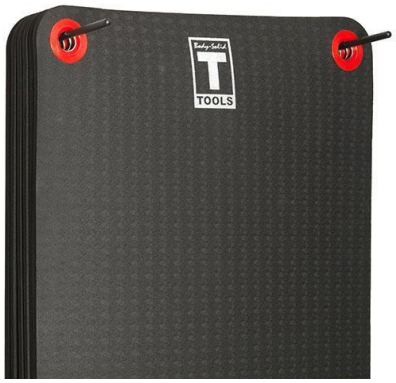

Body-Solid Hanging Foam Exercise Mat

The Body-Solid Tools Hanging Exercise Mat offers unmatched comfort and quality for yoga, stretching, low-impact and core-based exercises. Two reinforced eyelet rings allowing users to hang the BSTFM20 on a wall or door, saving space between workouts. Durable foam construction ensures the Body-Solid Tools Hanging Exercise Mat maintains both its shape and flatness over time while offering superior impact absorption and comfort. The non-slip surface is both water resistant and easy-to-clean, providing safety, stability and cleanliness to the BSTFM20 before, after and during all workouts.

- For use with yoga, stretching, low impact and core-based exercises
- Reinforced eyelets to hang mat on wall or door
- Quality foam construction offers durability and comfort
- Water-resistant & easy-to-clean non-slip surface
- Measures 71" x 23" x 3/8" Thick

SOURCE: https://www.fitnessfactory.com/item/6528/bstfmh/body-solid_foam_mat_wall_hanger/#sthash.lqHHXHuV.dpbs

7114

YOGA MAT-EXTRA THICK TO BE PLACED IN A BASKET WHEN ROLLED UP

YOGA MAT-WALMART ITEM #565342943

Mat measures 15 mm thick, which is almost 3/4 Inch. The mat's ridged texture creates a cooling, non-stick, moisture-resistant surface so you can work out with confidence. When not in use, each mat is easily rolled for storage. Best of all, the carrying handle makes it convenient to transport from home to the gym or yoga studio. This mat is great for absorbing impact, so it's a great source of body support and alignment during a workout. The non-slip bottom grips the floor, helping to prevent injuries. Perfect for gyms, schools, exercise classes and yoga studios, this ultra-thick foam mat can also serve as a sleeping pallet for camping trips or day care facilities. Available colors include black, red, blue and pink. Each mat measures 72 Inch long and 24 1/4 Inch wide.

- High-density foam mat measures almost 3/4 Inch
- Perfect for Pilates, Yoga and other floor exercises
- Ridged texture creates a non-stick, moisture-resistant surface for a comfortable workout

BASKET INFO:

Features: -Hand woven from burmese rattan. -Natural and sustainable product. Product Type: -Basket. Primary Material: -Wicker/Rattan. Nesting: -Yes. Size 31" x 25" x 14"

SOURCE FOR Crown Sporting Goods 3/4" Extra Thick Yoga Mat::

https://www.walmart.com/ip/Crown-Sporting-Goods-3-4-Extra-Thick-Yoga-Mat/40331748

SOURCE FOR BASKET: https://www.walmart.com/ip/Greyleigh-Albin-Rattan-Basket-with-Hoop-Handles/541453736?selected=true

JUNE 14, 2019

2-tier Dumbbell Rack w/ Saddles

MG-A84

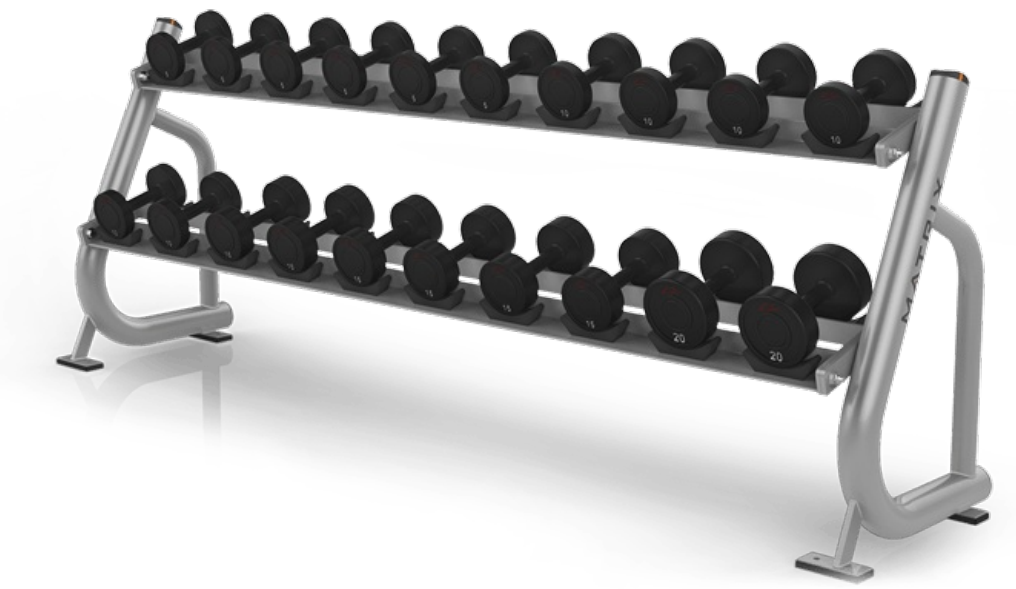

- Storage space for 10 pairs of pro-style dumbbells of any size
- Offset angle prevents wrist strain when removing and replacing dumbbells

FRAME	
Frame Finish	Proprietary two-coat powder process

TECH SPECS	
Shipping Weight	91 kg / 200 lbs.
Overall Dimensions (L x W x H)	46 x 239 x 81 cm / 18” x 94” x 32”

MATRIX

A7xi Ascent Trainer

- 41 cm / 16" capacitive touchscreen with FitTouch Technology offers intuitive operation
- WiFi connectivity accommodates integrated Matrix Asset Management system, plus optional Workout Tracking Network and Personal Trainer Portal
- xID single-point user sign-in offers a seamless personal experience
- Custom interface configuration through Matrix Asset Management facilitates personalized communication with users
- Advanced Sprint 8 High Intensity Interval Training program
- Integrated Virtual Active programming provides an immersive exercise experience
- Optimized app interface designed specifically for fitness offers easy access to social media and web content
- Compatible with IPTV
- RFID compatible to provide touch-free login
- Compatible with most smartphones and tablets for video, audio, charging and on-screen playlist selection
- Vista Clear Television Technology offers the most vibrant picture quality in the industry
- Integrated 3-speed personal fan
- Premium footpad insert enhances user comfort
- Adjustable incline and resistance for greater workout variety
- 51-61 cm / 20-24" adjustable stride length for increased range of motion
- 20-33 cm / 8-13” step-over height engages glutes, hamstrings and core stabilizer muscles
- Low 24 cm / 9.5" step-on height for easy accessibility
- Constant Rate of Acceleration and our patented suspension design delivers a perpetually smooth motion free of wheels and tracks
- Contralateral action with tapered, dual action handlebars mimics the body
- Ergo Form Grips with integrated controls enhance comfort and accessibility of key functions
- Removable disk for easy serviceability

CONSOLE	
Display Type	41 cm / 16″ class projective capacitive touchscreen LCD
Display Feedback	Time of Day, Time Elapsed, Time Remaining, Total Program Time, Distance (Kilometers or Miles), Calories, Calories per Hour, Level, Speed, Pace, Average Pace, Incline, RPM, Heart Rate, Peak Heart Rate, METs, Watts, Dynamic Profile Display, Static Profile Display
Secondary Data Display	Yes
User-defined Multi-language Display	English, German, French, Italian, Spanish, Dutch, Portuguese, Chinese (s), Chinese (t), Japanese, Korean, Swedish, Finnish, Russian, Arabic, Turkish, Polish, Welsh, Basque, Vietnamese, Somali, Danish
Resistance Range	1–25
Workouts	Manual, Rolling Hills, Target HR, Interval Training, Constant Watts, Fat Burn, Fitness Test, Random, Calorie Goal, Distance Goal, Time Goal, Sprint 8, Virtual Active
CSAFE Ready-FitLinxx™ Certified	Yes
IPTV Compatible	Yes
Pro:Idiom Compatible	Yes
FitTouch™ Technology	Yes
One-button Start	Yes

On-the-fly Program Change	Yes
Integrated Vista Clear™ Television Technology	Yes
FITCONNEXION™ Ready	No
WiFi Enabled	Yes
Bluetooth Enabled	Yes
Connects to Apple Watch	Yes
iPod® / iPhone® Compatible	Made for iPod, iPhone
Multimedia Playback	Compatible with most tablet and smartphone systems
Personal Fan	Yes
Personal Trainer Portal Compatible	Yes
USB Port	Yes
Virtual Active™ Compatible	Included
Asset Management Compatible	Included
Workout Tracking Network Compatible	Yes
Web Connectivity	Custom app interface in addition to web browser
Facility Communication Portal/Calendar	Programmed through Asset Management
RFID Compatible	Included

FEATURES	
Stride Length	53.3 cm / 21"
Incline Range	24% - 54% (15° range)
Step-on Height	24 cm / 9.5"
Contact & Telemetric HR	Yes
Footpad Insert	No
Pedal Spacing	6.4 cm / 2.5"
Handlebar Design	Multi-position dual action / custom ergo-bend stationary
Remote Buttons	Yes
Pause Function	Yes

FRAME	
Available Colors	Iced Silver or Matte Black

RESISTANCE SYSTEM	
Resistance System	Brushless generator

TECH SPECS	
Reading Rack	Yes
Power Requirements	Self-powered / powered 100v-240v - 50/60Hz AC
Minimum Watts	21 powered & self-powered
Minimum RPM	25 powered & self-powered
Assembled Dimensions	178 x 74 x 174cm / 70" x 29.2" x 68.5"
Max User Weight	182 kg / 400 lbs.
Assembled Weight	202.7 kg / 445 lbs.
Shipping Weight	216.5 kg / 476 lbs.

JUNE 14, 2019

MATRIX

C7xi ClimbMill

- 41 cm / 16" capacitive touchscreen with FitTouch Technology offers intuitive operation
- WiFi connectivity accommodates integrated Matrix Asset Management system, plus optional Workout Tracking Network and Personal Trainer Portal
- xID single-point user sign-in offers a seamless personal experience
- Custom interface configuration through Matrix Asset Management facilitates personalized communication with users
- Landmarks program enables users to scale 21 of the most famous buildings and monuments around the world
- Integrated Virtual Active programming provides an immersive exercise experience
- Optimized app interface designed specifically for fitness offers easy access to social media and web content
- Compatible with IPTV
- RFID compatible to provide touch-free login
- Compatible with most smartphones and tablets for video, audio, charging and on-screen playlist selection
- Vista Clear Television Technology offers the most vibrant picture quality in the industry
- Integrated 3-speed personal fan
- 25.4 cm / 10in step depth accommodates a wide range of users, and color variations aid the user in proper foot placement
- Step positioning software ensures the steps will lock at the lowest possible point for easy entry and exit
- Control Zone features a sensor that stops the step rotation when triggered by an object or person
- Our exclusive Sweat Management System was designed to track sweat away from the user and critical components – prolonging the life of the product
- Ergo Form Grips with integrated controls enhance comfort and accessibility of key functions
- Step-up plate for easy accessibility
- Anti-rust design prevents corrosion, prolonging the life of the product
- Rear-locking and leveling castors allow easy placement within facility
- Removable side access panels for easy serviceability
- Oil-free ECB modular drive system for maintenance free performance and quiet operation
- EN ISO 20957-8 certified

CONSOLE	
Connects to Apple Watch	Yes
Display Type	41 cm / 16″ class projective capacitive touchscreen LCD
Display Feedback	Time of Day, Time Elapsed, Time Remaining, Total Program Time, Total Steps, Floors Climbed, Calories, Calories per Hour, Level, Speed, SPM, Average SPM, Heart Rate, Peak Heart Rate, METs, Watts, Dynamic Profile Display, Static Profile Display
Secondary Data Display JUNE 14, 2019	Yes
User-defined Multi-language Display	English, German, French, Italian, Spanish, Dutch, Portuguese, Chinese (s), Chinese (t), Japanese, Korean, Swedish, Finnish, Russian, Arabic, Turkish, Polish, Welsh, Basque, Vietnamese, Somali, Danish
Resistance Range	1-25
Workouts	Manual, Rolling Hills, Target HR, Interval Training, Fat Burn, Stepper Fitness Test, Time Goal, Calorie Goal, Floor Goal, Landmarks, Virtual Active
CSAFE Ready-FitLinxx™ Certified	Yes
IPTV Compatible	Yes

Pro:Idiom Compatible	Yes
FitTouch™ Technology	Yes
One-button Start	Yes
On-the-fly Program Change	Yes
Integrated Vista Clear™ Television Technology	Yes
FITCONNEXION™ Ready	No
WiFi Enabled	Yes
Bluetooth Enabled	Yes
iPod® / iPhone® / iPad® Compatible	Made for iPod, iPhone, iPad
Multimedia Playback	Compatible with most tablet and smartphone systems
Personal Fan	Yes
Personal Trainer Portal Compatible	Yes
USB Port	Yes
Virtual Active™ Compatible	Included
Asset Management Compatible	Included
Workout Tracking Network Compatible	Yes
Web Connectivity	Custom app interface in addition to web browser
Facility Communication Portal/Calendar	Programmed through Asset Management
RFID Compatible	Yes
Pause Function	Yes
Reading Rack	Yes

FEATURES	
Step Depth	25.4 cm / 10"
Step Height	20.31 cm / 8"
Contact & Telemetric HR	Yes
Delineated Steps	Yes
Handlebar Design	Optimized handrails with Ergo Form Grips
Remote Buttons	Yes
Control Zone	Yes
Auto-stop Function	Yes

FRAME	
Available Colors	Iced Silver or Matte Black

RESISTANCE SYSTEM	
Resistance Technology	ECB with Flywheel

TECH SPECS	
Power Requirements	100v-240v – 50/60Hz AC
Assembled Dimensions	165 x 85 x 212 cm / 65" x 40.3" (with cupholders) x 83.5"
Max User Weight	182 kg / 400 lbs.
Assembled Weight	171 kg / 377 lbs.

R7xi Recumbent Cycle

- 41 cm / 16" capacitive touchscreen with FitTouch Technology offers intuitive operation
- WiFi connectivity accommodates integrated Matrix Asset Management system, plus optional Workout Tracking Network and Personal Trainer Portal
- xID single-point user sign-in offers a seamless personal experience
- Custom interface configuration through Matrix Asset Management facilitates personalized communication with users
- Advanced Sprint 8 High Intensity Interval Training program
- Integrated Virtual Active programming provides an immersive exercise experience
- Optimized app interface designed specifically for fitness offers easy access to social media and web content
- Compatible with IPTV
- RFID compatible to provide touch-free login
- Compatible with most smartphones and tablets for video, audio, charging and on-screen playlist selection
- Vista Clear Television Technology offers the most vibrant picture quality in the industry
- Integrated 3-speed personal fan
- Ergo Form seat and back pad enhance comfort and support
- Intuitive one-hand adjustment fine-tunes seat position
- Step-thru entry for easy access

CONSOLE

Display Type	41 cm / 16″ class projective capacitive touchscreen LCD
Display Feedback	Time of Day, Time Elapsed, Time Remaining, Total Program Time, Distance (Kilometers or Miles), Calories, Calories per Hour, Level, Speed, Pace, Average Pace, RPM, Heart Rate, Peak Heart Rate, METs, Watts, Dynamic Profile Display, Static Profile Display
Secondary Data Display	Yes
User-defined Multi-language Display	English, German, French, Italian, Spanish, Dutch, Portuguese, Chinese (s), Chinese (t), Japanese, Korean, Swedish, Finnish, Russian, Arabic, Turkish, Polish, Welsh, Basque, Vietnamese, Somali, Danish
Resistance Range	30-Jan
Workouts	Manual, Rolling Hills, Target HR, Interval Training, Constant Watts, Fat Burn, Fitness Test, Calorie Goal, Distance Goal, Time Goal, Sprint 8, Virtual Active™
CSAFE Ready-FitLinxx™ Certified	Yes
IPTV Compatible JUNE 14, 2019	Yes
Pro:Idiom Compatible	Yes
FitTouch™ Technology	Yes
One-button Start	Yes
On-the-fly Program Change	Yes
Integrated Vista Clear™ Television Technology	Yes
FITCONNEXION™ Ready	No
WiFi Enabled	Yes

Bluetooth Enabled	Yes
Connects to Apple Watch	Yes
iPod® / iPhone® Compatible	Made for iPod, iPhone
Multimedia Playback	Compatible with most tablet and smartphone systems
Personal Fan	Yes
Personal Trainer Portal Compatible	Yes
USB Port	Yes
Virtual Active™ Compatible	Included
Asset Management Compatible	Included
Workout Tracking Network Compatible	Yes
Web Connectivity	Custom app interface in addition to web browser
Facility Communication Portal/Calendar	Programmed through Asset Management
RFID Compatible	Included

FEATURES	
Contact & Telemetric HR	Yes
Handlebar Design	Seat side and Front ergo bend
Integrated Arm Rests	Yes
Remote Resistance Controls	Yes
Bottle Holder	Yes
Pause Function	Yes

FRAME	
Available Colors	Iced Silver or Matte Black

RESISTANCE SYSTEM	
Resistance System	Brushless generator

TECH SPECS	
Reading Rack	Yes
Crank Design	Three piece with forged arms
Power Requirements	Self-powered / powered 100v-240v - 50/60Hz AC
Minimum Watts	4 powered / 10 self-powered
Minimum RPM	25 powered / 25 self-powered
Assembled Dimensions	150.3 x 65.4 x 140 / 59.2" x 25.7" x 55.1"
Max User Weight	182 kg / 400 lbs
Assembled Weight	89 kg / 196.3 lbs.
Shipping Weight	101.3 kg / 223.5 lbs.

MATRIX

T7xi Treadmill

- 48 cm / 19" capacitive touchscreen with FitTouch Technology offers intuitive operation
- WiFi connectivity accommodates integrated Matrix Asset Management system, plus optional Workout Tracking Network and Personal Trainer Portal
- xID single-point user sign-in offers a seamless personal experience
- Custom interface configuration through Matrix Asset Management facilitates personalized communication with users
- Advanced Sprint 8 High Intensity Interval Training program
- Integrated Virtual Active programming provides an immersive exercise experience
- Optimized app interface designed specifically for fitness offers easy access to social media and web content
- Compatible with IPTV
- RFID compatible to provide touch-free login
- Compatible with most smartphones and tablets for video, audio, charging and on-screen playlist selection
- Vista Clear Television Technology offers the most vibrant picture quality in the industry
- Integrated 3-speed personal fan
- Crossbar speed and incline controls make adjustments quick and easy
- Ultimate Deck System for superior performance and durability
- 56 cm / 22" wide belt provides an added sense of security and freedom
- Matrix 5.0 Hp AC motor with Dynamic Response Drive System fine-tunes response based on footfall pattern for a smooth, consistent, natural workout

CONSOLE	
Display Type	48 cm / 19" class projective capacitive touchscreen LCD
Display Feedback	Time of Day, Time Elapsed, Time Remaining, Total Program Time, Distance (Kilometers or Miles), Calories, Calories per Hour, Speed, Pace, Average Pace, Elevation Gained, Incline, Heart Rate, Peak Heart Rate, METs, Watts, HD Dynamic Profile Display
Secondary Data Display	Yes
User-defined Multi-language Display	English, German, French, Italian, Spanish, Dutch, Portuguese, Chinese, Japanese, Korean, Swedish, Finnish, Russian, Arabic, Turkish, Polish, Welsh, Basque, Vietnamese, Somali, Danish
Workouts	Manual, Rolling Hills, Fat Burn, Sprint 8, Target HR (incline), Gerkin Protocol, Calorie Goal, Distance Goal, Time Goal, Army PFT, Navy PRT, Marine PFT, Air Force PRT, Physical Efficiency Battery (PEB), Virtual Active
CSAFE Ready-FitLinxx™ Certified	Yes
IPTV Compatible	Yes
Pro:Idiom Compatible	Yes
FitTouch™ Technology	Yes
One-button Start	Yes
On-the-fly Program Change	Yes
Integrated Vista Clear™ Television Technology	Yes
FITCONNEXION™ Ready	No
WiFi Enabled	Yes

Bluetooth Enabled	Yes
Connects to Apple Watch	Yes
iPod® / iPhone® Compatible	Made for iPod®, iPhone®
Multimedia Playback	Compatible with most tablet and smart phone systems
Personal Fan	Yes
Personal Trainer Portal Compatible	Yes
USB Port	Yes
Virtual Active™ Compatible	Included
Asset Management Compatible	Included
Workout Tracking Network Compatible	Yes
Web Connectivity	Custom app interface in addition to web browser
Facility Communication Portal/Calendar	Programmed through Asset Management
RFID Compatible	Included
Pause Function	Yes
Reading Rack	No

DRIVE SYSTEM	
Drive System	Matrix 5.0 hp AC Dynamic Response Drive System™

FEATURES	
Deck Type	Ultimate hard-wax reversible 1" deck
Belt Type	Habasit, 2-ply commercial grade
Running Area	152 x 56 cm / 60" x 22"
Step-on Height	24 cm / 9.5"
Cushion System	Ultimate Deck™ cushioning system
Incline Range	0-15% (590-kg / 1,300-lb. thrust elevation motor)
Speed Range	0.8 - 24.1 km/h / 0.5 - 15 mph
Contact & Telemetric HR	Yes
Crossbar Controls	Go, stop, cool down, speed and incline control
Tread Sense	Yes

FRAME	
Available Colors	Iced Silver or Matte Black

TECH SPECS	
Power Requirements	20-amp dedicated circuit required, non-looped grounded
Electrical Receptacle & Plug	NEMA 5-20R 120v
Assembled Dimensions	215 x 93 x 161 cm / 84.6" x 36.5" x 63.5"
Max User Weight	182 kg / 400 lbs.
Assembled Weight	181 kg / 399 lbs.
Shipping Weight	200 kg / 440 lbs.

MATRIX

U7xi Upright Cycle

- 41 cm / 16" capacitive touchscreen with FitTouch Technology offers intuitive operation
- WiFi connectivity accommodates integrated Matrix Asset Management system, plus optional Workout Tracking Network and Personal Trainer Portal
- xID single-point user sign-in offers a seamless personal experience
- Custom interface configuration through Matrix Asset Management facilitates personalized communication with users
- Advanced Sprint 8 High Intensity Interval Training program
- Integrated Virtual Active programming provides an immersive exercise experience
- Optimized app interface designed specifically for fitness offers easy access to social media and web content
- Compatible with IPTV
- RFID compatible to provide touch-free login
- Compatible with most smartphones and tablets for video, audio, charging and on-screen playlist selection
- Vista Clear Television Technology offers the most vibrant picture quality in the industry
- Integrated 3-speed personal fan
- Intuitive one-hand adjustment fine-tunes seat position
- Race-inspired handles provide a comfortable ride experience
- Step-thru entry for easy access

CONSOLE

Display Type	41 cm / 16″ class projective capacitive touchscreen LCD
Display Feedback	Time of Day, Time Elapsed, Time Remaining, Total Program Time, Distance (Kilometers or Miles), Calories, Calories per Hour, Level, Speed, Pace, Average Pace, RPM, Heart Rate, Peak Heart Rate, METs, Watts, Dynamic Profile Display, Static Profile Display
Secondary Data Display	Yes
User-defined Multi-language Display	English, German, French, Italian, Spanish, Dutch, Portuguese, Chinese (s), Chinese (t), Japanese, Korean, Swedish, Finnish, Russian, Arabic, Turkish, Polish, Welsh, Basque, Vietnamese, Somali, Danish
Resistance Range	30-Jan
Workouts	Manual, Rolling Hills, Target HR, Interval Training, Constant Watts, Fat Burn, Fitness Test, Calorie Goal, Distance Goal, Time Goal, Sprint 8, Virtual Active™
CSAFE Ready-FitLinxx™ Certified	Yes
IPTV Compatible JUNE 14, 2019	Yes
Pro:Idiom Compatible	Yes
FitTouch™ Technology	Yes
One-button Start	Yes
On-the-fly Program Change	Yes
Integrated Vista Clear™ Television Technology	Yes
FITCONNEXION™ Ready	No
WiFi Enabled	Yes

Bluetooth Enabled	Yes
Connects to Apple Watch	Yes
iPod® / iPhone® Compatible	Made for iPod, iPhone
Multimedia Playback	Compatible with most tablet and smartphone systems
Personal Fan	Yes
Personal Trainer Portal Compatible	Yes
USB Port	Yes
Virtual Active™ Compatible	Included
Asset Management Compatible	Included
Workout Tracking Network Compatible	Yes
Web Connectivity	Custom app interface in addition to web browser
Facility Communication Portal/Calendar	Programmed through Asset Management
RFID Compatible	Included

FEATURES	
Contact & Telemetric HR	Yes
Handlebar Design	Molded racing design with elbow support
Integrated Arm Rests	Yes
Remote Resistance Controls	Yes
Bottle Holder	Yes
Pause Function	Yes

FRAME	
Available Colors	Iced Silver or Matte Black

RESISTANCE SYSTEM	
Resistance System	Brushless generator

TECH SPECS	
Reading Rack	Yes
Crank Design	Three piece with forged arms
Power Requirements	Self-powered / powered 100v-240v - 50/60Hz AC
Minimum Watts	4 powered / 10 self-powered
Minimum RPM	25 powered / 25 self-powered
Assembled Dimensions	130.7 x 65.4 x 153.7 / 51.5" x 25.7" x 60.5"
Max User Weight	182 kg / 400 lbs
Assembled Weight	87.8 kg / 193.5 lbs.
Shipping Weight	102 kg / 224.9 lbs.

MATRIX

Flat Bench

G3-FW81

- Integrated foot supports for greater user stability
- Integrated wheels facilitate movement around facility
- Bench has 3-point contact for improved leveling

FRAME	
Over-sized Frame Tubing	Yes
Frame finish	Proprietary two-coat powder process
Frame Color	Iced Silver

TECH SPECS	
Total Weight	26 kg / 57 lbs.
Overall Dimensions	156.2 x 68.7 x 43.0 cm / 61.5” x 27.0” x 16.9”

MATRIX

Functional Trainer

G3-MSFT300/400

- 1:4 ratio for low starting resistance and high-speed movements
- Available with 290lb (MSFT300) or 390lb (MSFT400) stacks
- Swivelling accessory station accommodates more training handles and attachments
- Multi-grip position pull-up handles with unique rock climbing attachment
- Integrated foldaway step for easy access
- Includes 10 standard grips and attachments

EASE OF USE	
Color-coded Pivots & Adjusts	Yes
Instructional Placards	Yes
Bottle & Towel Holder	Yes
Ergo Form Cushions	No

FRAME	
Over-sized Frame Tubing	Yes
Frame Finish	Proprietary two-coat powder process
Frame Color	Iced Silver

TECH SPECS	
Total Weight Functional Trainer G3-MSFT 300	601 kg / 1324 lbs.
Weight Stack Functional Trainer G3-MSFT 300	2 x 131 kg / 2 x 290 lbs. (1:4 Ratio)
Effective Resistance G3-MSFT 300	32.9 kg / 72.5 lbs (per side)
Total Weight Functional Trainer G3-MSFT 400	697 kg / 1537 lbs.
Weight Stack Functional Trainer G3-MSFT 400	2 x 176 kg / 2 x 390 lbs. (1:4 Ratio)
Effective Resistance G3-MSFT 400	44.2 kg / 97.5 lbs (per side)
Overall Dimensions	169.2 x 130.2 x 234.4 cm / 66.6” x 51.2” x 92.3”
Cable Travel Length	457 cm / 15'

WEIGHT STACK	
Weight Pins	Magnetic & tethered
Guards & Pulleys Covers	Yes
Suspension	3-Point Design
Self-lubricating Weight Stack Bushings	Solid cold-rolled steel plate, with Teflon inner bushings.

MATRIX

Lat Pulldown / Seated Row

VS-S331

- Thigh pad easily adjusts to provide stability and comfort
- Elevated foot rests provide stability and comfort during heavy lifts
- Stainless-steel cable guides provide added protection for lasting durability
- Clearly indicated adjustments for ease of use

ADJUSTMENTS	
Color coded pivots & points of adjustment	Yes

FRAME & CABLES	
Frame color	Iced Silver
Frame finish	Proprietary two-coat powder process
Cable transmission	Internally lubricated cables & fittings
Machine anchoring	Machine anchoring locations

TECH SPECS	
Product Weight (Standard Stack)	246 kg / 543 lbs.
Product Weight (Heavy Stack)	278 kg / 613 lbs.
Overall Dimensions (L x W x H)	180.5 x 157.9 x 226.3 cm / 71.1” x 62.2” x 89.1”

USER AMENITIES	
Rear placards	Color-coded machine identification & machine specific stretching
Front placards	Muscle call outs, machine specific stretching, start & finish exercise illustrations, proper machine movements
Placard color coding	Yellow (upper body)
Contoured seat	Yes
Personal storage	Bottle holder, storage area and towel holder (towel holder on rep counter only)
Rep counter	Electronic counter displays reps, exercise time and rest time & provides towel holder hook
Foot Support	Foot support accommodates users of all sizes for additional lower body support

JUNE 14, 2019

WARRANTY	
Frame and welds (not coatings)	10 years
Weight Stacks	5 years
Pulleys & Pivot Bearings	5 years
Other Items Not Specified	3 years
Labor	3 years
Upholstery/cables/grips/springs	1 year

Accessories	6 months
Air Filled Shock	90 days

WEIGHT STACK	
Weight stack guarding	Full front and rear shields
Incremental weight system	5 lbs (2.3 kg)
Standard Stack	72.6 kg / 160 lbs.
Heavy Stack	104.3 kg / 230 lbs.

MATRIX

Leg Press / Calf Press

VS-S70

- One-handed start adjustment for ease of use
- Air shock assisted foot platform provides smoother adjustments
- Assistance handle and low step over height for easy access
- Footplate identifies user foot position with unique visual indicators
- Incremental weight

ADJUSTMENTS	
Color coded pivots & points of adjustment	Yes
Range of Motion Adjustment	Gas Assisted Foot Platform Adjustment

FRAME & CABLES	
Frame finish	Proprietary two-coat powder process
Frame color	Iced Silver
Cable transmission	Internally lubricated cables & fittings
Machine anchoring	Machine anchoring locations

TECH SPECS	
Product Weight	361 kg / 795 lbs.
Overall dimensions	232.4 x 102.4 x 167.1 cm / 91.5” x 40.3” x 65.8”
Rep counter machine usage tracking	Service mode tracks total machine reps and hours of use
Rep counter battery life	Approximately 3 years
Rep counter power supply	2 AA batteries

USER AMENITIES	
Personal storage	Bottle holder, storage area and towel holder (Towel Holder on Rep Counter Only)
Rep counter	Electronic counter displays reps, exercise time and rest time & provides towel holder hook
Front placards	Muscle call outs, machine specific stretching, start & finish exercise illustrations, proper machine movements
Placard color coding	Blue (lower body)
Rear placards	Color-coded machine identification & machine specific stretching

JUNE 14, 2019

WEIGHT STACK	
Weight stack guarding	Full front and rear shields
Weight plate increments	25 lbs (11 kg)
Incremental weight system	5 lbs (2.3 kg)
Consistent stack height	Yes

7179

Total stack weight	415 lbs (188 kg)

JUNE 14, 2019

MEGA Half Rack

MG-MR690

- Open-front design gives users freedom of movement
- As shown with adjustable safety bars, dual-grip chin bar, bar storage, band storage and weight storage
- J-hooks made of high-density polyethylene (HDPE) to protect bar knurling from scratches
- Visual height indicator and colored locking pin make bar-level changes quick and easy
- 3 retractable lower band pegs on each side (6 total)

FRAME	
Frame Construction	10.2 x 10.2 cm / 4” x 4” uprights are made of 7-gauge, laser-cut steel tubing
Frame Construction	Main frame is made of 10.2 x 7.6 cm / 4” x 3” steel tubing
Integrated Frame Components	2 sets of chin bars: 1 set of 3.2 cm / 1.25”; 1 set of 5.1 cm / 2” Fat Bar (both have neutral and pronated positions)
Integrated Frame Components	1 set of band hooks standard
Integrated Frame Components	2 additional chain-storage horns

STORAGE	
Weight	10 weight-storage horns capable of holding both Bumper and Olympic plates
Bar	1 bar-storage tube

TECH SPECS	
8' Overall Dimensions (L x W x H)	170.5 x 207 x 246.5 cm / 67” x 81.5” x 97”
9' Overall Dimensions (L x W x H)	171 x 207 x 277 cm / 67.5" x 81.5" 109"
8' Product Weight	259 kg / 570 lbs
9' Product Weight	282.1 kg / 622 lbs
Max. User Weight	181.5 kg / 400 lbs.
Max. Training Weight	408.5 kg / 900 lbs.

Multi-Adjustable Bench LP

MG-A82

- Seat automatically adjusts with the back pad for ease of use
- Adjustable back pad with 8 positions from 0 to 75 degrees
- Wide back pad stabilizes users during heavy lifts
- Molded guards protect high wear / scuff areas
- Transport handle and integrated wheels simplify movement within facility
- Low 46 cm / 17.8” floor-to-pad height minimizes lower back stress and prevents arching

TECH SPECS	
Overall Dimensions (L x W x H)	152 x 78 x 46 cm / 59.7” x 30.6” x 17.8”
Product Weight	55 kg / 121.5 lbs
Max User Weight	159 kg / 350 lbs
Max Training Weight	272 kg / 600 lbs.

WARRANTY	
Frame and welds (not coatings)	10 years
Weight Stacks	5 years
Pulleys & Pivot Bearings	5 years
Other Items Not Specified	3 years
Labor	3 years
Upholstery/cables/grips/springs	1 year
Accessories	6 months

JUNE 14, 2019

MATRIX

Multi-Press

VS-S131

- Designed for easy entry and exit
- Dual-position hand grips allow for greater training variety
- Elevated foot rests provide stability and comfort during heavy lifts
- Reclined position offers greater lumbar support
- Smoothly transition between exercises with one simple adjustment
- Clearly indicated adjustments for ease of use

ADJUSTMENTS	
Color coded pivots & points of adjustment	Yes
User adjustment range	3 user start options

FRAME & CABLES	
Frame color	Iced Silver
Frame finish	Proprietary two-coat powder process
Cable transmission	Internally lubricated cables & fittings
Machine anchoring	Machine anchoring locations

TECH SPECS	
Product Weight (Standard Stack)	236 kg / 520 lbs.
Product Weight (Heavy Stack)	268 kg / 590 lbs.
Overall Dimensions (L x W x H)	154.3 x 157.2 x 199.9 cm / 60.7” x 61.9” x 78.7”

USER AMENITIES	
Rear placards	Color-coded machine identification & machine specific stretching
Front placards	Muscle call outs, machine specific stretching, start & finish exercise illustrations, proper machine movements
Placard color coding	Yellow (upper body)
Contoured seat	Yes
Personal storage	Bottle holder, storage area and towel holder (towel holder on rep counter only)
Rep counter	Electronic counter displays reps, exercise time and rest time & provides towel holder hook
Foot Support	Foot support accommodates users of all sizes for additional lower body support

WARRANTY	
Frame and welds (not coatings)	10 years
Weight Stacks	5 years
Pulleys & Pivot Bearings	5 years
Other Items Not Specified	3 years

Labor	3 years
Upholstery/cables/grips/springs	1 year
Accessories	6 months
Air Filled Shock	90 days

WEIGHT STACK	
Consistent stack height	Yes
Weight stack guarding	Full front and rear shields
Incremental weight system	5 lbs (2.3 kg)
Standard Stack	72.6 kg / 160 lbs.
Heavy Stack	104.3 kg / 230 lbs.

MATRIX

Utility Bench

G3-FW84

- Back angle is 85 degrees, improving comfort and stability for overhead movements
- Integrated foot supports increase stability
- Integrated wheels facilitate movement around facility

FRAME	
Frame Color	Iced Silver
Frame finish	Proprietary two-coat powder process
Over-sized Frame Tubing	Yes

TECH SPECS	
Shipping Weight	32 kg / 71 lbs.
Product Weight	27 kg / 60 lbs.
Overall Dimensions	118.9 x 75.9 x 96.2 cm / 46.8” x 29.9” x 37.9”

MATRIX

Olympic Decline Bench

G3FW15

- Bench is angled at 15 degrees for effective muscle stimulation
- Three take-off positions provide adaptability for users with varying arm lengths
- Tibia adjuster allows for near-infinite adjustment positions

FRAME & BELT	
Frame Color	Iced Silver
Over-sized Frame Tubing	Yes
Frame finish	Proprietary two-coat powder process

TECH SPECS	
Overall Dimensions (L x W x H)	211 x 159 x 127 cm / 83” x 63” x 50”
Total Weight	90 kg / 198 lbs.
Shipping Weight	108 kg / 238 lbs.

7316

OXYGEN FLOWMETER

CHEMETRON

Timeter Oxygen flowmeter 0-15 lpm w/Chemetron adapter

SKU#: 607-15002-03

-

The Timeter Soft-Touch flowmeter is durable, long-lasting and easy to maintain. Brass body for more durability. 5 years warranty. Manufactured by Allied Healthcare Products, Timeter Safe Grip.

NSN: 6680-01-253-0290.

• Flowmeter hood is made of crack-resistant polycarbonate

• Easier readability on the 0-5 Lpm range

• The dual tapered metering tube provides outstanding accuracy

• Steel float eliminates sticking caused by static electricity

• The nickel-plated solid brass body provides high durability and long life

• Larger, easier to grip Soft-Touch knob • Color coded for air or oxygen

SOURCE: **https://www.lifemedicalsupplier.com/timeter-o2-flowmeter-chemetron-male-quick-connector.html**

7317

CHEMETRON VACUUM REGULATORL TYPICAL

SKU: GT881VR300CHA

REGULATOR,SUCTION,CONT/INT,CHEMTRON

Continuous / Intermittent Suction Regulators

REGULATOR, SUCTION, CONT / INT, CHEMTRON

- Medline Gentec Suction Regulators feature antimicrobial additives in the rotary knobs and switches*.
- Extremely durable, with a full 10-year manufacturer's warranty.
- Available MRI conditional (can be used near MRI equipment; a minimum distance of only 1 ft. is required).
- They feature large user-friendly mode selector switches and a 1.25" (3.2 cm)diameter adjustment knob, easy-to-read numbers, a large 2.5" (64.cm) diameter gauge with glow-in-the dark scale and arrow.
- Color-coding available to help facilities manage inventory and allocation across different departments(color must be specified in sales notes).
- Available with ranges 0-300 mmHg or 0-160 mmHG .
- Settings include continuous, off and intermittent.
- Factory default settings for on/off cycles are 16 seconds (+/- 2) on, 8 seconds (+/- 2) off; on/off settings can be adjusted without opening the case (controls are not accessible without tools).

Specifications

Adapter Type	Chemetron Adapter
Bottom Fitting	None
Connector Type	No Bottom Fitting
HPIS Code	680_330_60_0
Latex Free	Yes
Suction	Continuous/Intermittent
UNSPSC	42271707
mmHg	0-160

SOURCE:
https://www.medline.com/sku/item/MDPGT881VR160CHA;ecomsessionid=Ce0lqWctHREG15v4yJSO8SjBUangKK50oIE4yoKW.OC4-b2b?skuIndex=S2&question=&flowType=&indexCount=

JUNE 14, 2019

7318

MOBILE OXYGEN TANK KIT

E Oxygen Cylinder Kit on Cart

Product #: 1630AE

DESCRIPTION:

1602E Aluminum Oxygen Cylinder, 1335 adj. flow reg. (2 - 8 LPM), nasal cannula, 370C cart (Empty)

Approximate Size: 10”w x 10”d x 32”h

SOURCE: https://www.madamedical.com/category/oxygen-kits/product/1630AE

PORTABLE SUCTION UNIT

General Specifications

CHARACTERISTICS	SPECIFICATIONS
Size	17"L x 9"H x 5.25"W (43.18cm L x 22.86cm H x 13.33cm W)
Weight	10.15 lbs/4.6 kgs Device only
Vacuum Pump	12V DC oil-less diaphragm. Clinical Airflow >= 30LPM
Variable Regulator (7)	Controls negative pressure
Gauge (8)	Calibrated in mmHg. Color-coded.
Power Source: Battery (DC Power)	Rechargeable Sealed Lead Acid. SSCOR part # 80635
Medical Switcher (AC Power)	100V-240VAC, 47-63Hz Uses 1ea. 3A 250V fast acting fuse
Switch (5) -	Off/Standby/On membrane switch
AC receptacle (1A)	Uses (2) 2.5A 250V fast acting fuses
Collection Canister (13)	1200cc/ml SSCOR part #48041
Patient tubing	Vinyl tubing 9/32"ID x 72"L (7.1mm ID x 182.88 cm L) SSCOR part #43200
Suction Tip	HI-D® "Big Stick®" SSCOR part #44241C

ReVel® ventilator specifications

Transport ventilation

7325

Certified Airworthiness Release (AWR) for compliance with military transport aircraft

Breath types	Volume control, pressure control, pressure regulated volume control (PRVC), pressure regulated volume support (PRVS), pressure support (PS), spontaneous
Breath modes	Assist control, synchronized intermittent mandatory ventilation (SIMV), continuous positive airway pressure (CPAP) plus PS, noninvasive positive pressure ventilation (NPPV), apnea backup

Physical dimensions	
Size	11.3" *(h)* x 7.1" *(w)* x 3.3" *(d)* *(28.7 cm x 18.0 cm x 8.4 cm)*
Weight	9.5 lb *(4.3 kg)*

Maneuver	
Maneuver	**Function**
Expiratory hold	0–6 sec
Inspiratory hold	0–6 sec

PTM patient and ventilator data	
Waveform	PTM display only
Loop	PTM display only
Trending	24-hr trend of all patient monitors

Maneuver monitor	
Monitor	**Range**
Auto positive end-expiratory pressure (PEEP)	0–99 cmH_2O
Delta pressure (dPaw)	1–99 cmH_2O
Expiratory pressure (Pexp)	0–100 cmH_2O
Plateau pressure (Pplat)	1–99 cmH_2O
Static lung compliance (Cstatic)	1–999 mL/cmH_2O

LED display	
Display type	12 5x7 dot matrix
Resolution	49 bicolor manometer
Viewable size	7 segment

CareFusion

Control setting	
Control	**Range**
Bias flow	3–10 LPM
Breath rate	1–80 BPM
Breath type	Volume Control, Pressure Control, PRVC
Flow termination	10–40% of peak flow
High pressure alarm delay	0, 1, 2 breaths
Inspiratory time	0.3–9.9 sec
Leak comp	On, Off
LPP alarm control	All Breaths, Control Only
NPPV	On, Off
O_2%	LPS, 21–100
PEEP	0–20 cmH_2O
Pressure control	1–99 cmH_2O
PS	Off, 1–60 cmH_2O
Pressure trigger	1–20 below PEEP
Pressure control flow termination	On, Off
Rise time	**Rise time setting** / **Commanded rise time *(sec)*** 1 / 0.100 2 / 0.133 3 / 0.178 4 / 0.237 5 / 0.316 6 / 0.422 7 / 0.562 8 / 0.750 9 / 1.000
Safety valve delta pressure	5–30 cmH_2O
Flow sensitivity	P, 1–9 LPM
Tidal volume	50–2,000 mL
Time termination	0.3–3 sec
Ventilation mode	Assist/Control (A/C), SIMV, CPAP plus PS
SBT O_2%	LPS, 21–100
SBT PEEP	0–20 cmH_2O

Control setting *(continued)*	
Control	**Range**
SBT PS	"- -" *(off)*, 1–30 cmH_2O
SBT time	15–120 min
SBT f/Vt display	"On," "Off"

Roll stand	
Physical dimension	
Height	40.9" *(103.9 cm)*
Weight	52 lb *(23.6 kg)*
Wheels	5 casters *(2 lockable)*
Ground clearance	2.75" *(7 cm)*

Adjustable alarm	
Alarm	**Range**
Apnea *(interval)*	10–60 sec
High pres	5–100 cmH_2O
High f	1–120 BPM, or "- -" *(off)*
High PEEP	3–40 cmH_2O, or "- -" *(off)*
High pulse	18–299 BPM, or "- -" *(off)*
High SpO_2	80–99%, or "- -" *(off)*
Low FiO_2	"- -" *(off)*, or 18–95%
Low min vol	"- -" *(off)*, or 0.1–99 L
Low pk pres	"- -" *(off)*, or 1–60 cmH_2O
Low PEEP	"- -" *(off)*, or 1–20 cmH_2O
Low pulse	"- -"*(off)*, or 19–300 BPM
Low SpO_2	"- -"*(off)*, or 60–99%
SBT > f	15–80 BPM, or SBT Hi f off
SBT > f/Vt	70–900 BPM/L, or Hi f/Vt off
SBT < f	SBT Lo f off, or 1–40 BPM
SBT < f/Vt	Lo f/Vt off, or 5–90 BPM/L
SBT Hi PEEP	3–40 cmH_2O, or "- -" *(off)*
SBT Lo PEEP	"- -" *(off)*, or 1–20 cmH_2O

7325

Alarm system

Audible volume	45–85 dBA

Procedure

Procedure	Function
O_2 flush	Delivers a pre-selected increase in O_2 percentage for a pre-selected duration
Nebulization	Provides a flow of 6 LPM ± 10% O_2 to drive a nebulizer *(optional)*; configurable as continuous or inspiration only
Spontaneous breathing trial (SBT)	During the SBT procedure, delivers ventilation in CPAP +PS mode with the selected SBT control settings in Extended Features; calculates f/Vt

Power

Input voltage		
11–16 VDC		
Removable battery pack		
Type	Lithium-ion	
Duration	4-hr internal battery *(hot swappable)*	
Feature/spec.	**Detail**	
Electrical	Nominal voltage output	10.8 VDC
	Nominal capacity	5,800 mAH *(at 1C rate)*, min
	Charge rating	12.3 VDC, 2.0 A max
Charge time	Transition battery is fully recharged within 5 hr	
	Removable battery pack can be recharged within 8 hr	

Environmental

Storage	
Temperature	-4 to 140 °F *(-20–60 °C)*
Humidity	5 to 95% relative, non-condensing
Operating	
Temperature	32–104 °F *(0–40 °C)*
Humidity	5–95% relative, non-condensing
Altitude	
Storage	50,000' max *(11.6 kPa)*
Operating	-2,300 to 10,600' *(68–110 kPa)*

Device monitor

Monitor	Range
Measured Leak	0–30 LPM
O_2 Source Pressure	2–99.9 psi
Peak Expiratory Flow	0–190 LPM
Removable Battery Capacity Remaining	0–120%
Vent Usage Meter, non resettable	0–500,000 hr
Vent Usage Meter, resettable	0–500,000 hr

Patient monitor

Monitor	Range
Airway Pressure (Paw)	-6 to +90 cmH_2O measured at the patient wye
Exhaled Minute Volume (VE)	0–99.9 L
Exhaled Tidal Volume (Vte)	0–4,000 mL
Fraction of Inspired Oxygen (FiO_2)	12–103% O_2
I:E Ratio, Calculated (IEcalc)	1:99–4.0:1
I:E Ratio, Measured	1:99–45:1
Mean Airway Pressure (MAP)	0–99 cmH_2O
Peak Inspiratory Flow	3–190 LPM measured at the patient wye
Peak Inspiratory Flow, Calculated	10–120 LPM
Peak Inspiratory Pressure (PIP)	0–120 cmH_2O, or hPa
PEEP	0–99 cmH_2O, or hPa
Pulse Oximetry signal strength	Green/Amber/Red
Pulse Rate	18–300 BPM
SBT f/Vt	0–999 BPM/L
SBT time remaining	00:00 *(mm:ss)*–01:59:59 *(hh:mm:ss)*
SpO_2	0–100%
Spontaneous Breath Rate (Sp f)	0–120 BPM
Spontaneous Tidal Volume (SpVte)	0–4,000 mL
Total Breath Rate (f)	0–120 BPM

8051

PEDIGO®

bassinets

JUNE 14, 2019

8051

bassinets

PEDIGO®
manufacturing lifetime value

shown with optional bassinet and pad

P-1110-SS
bassinet stand

features
- Design allows close approach from both sides
- Basket can be raised at either end
- 3" double ball bearing swivel casters
- *Lower shelf available as an option*

frame size
18¼"W x 31"L x 37¾"H
- Height with bassinet basket: 41"H

shown with optional bassinet and pad

P-1110-A-SS
bassinet stand with drawer

features
- Side mounted drawer measures: 16½"W x 13¼"L x 7⅜"H
- Design allows close approach from both sides
- Basket can be raised at either end
- 3" double ball bearing swivel casters
- *Lower shelf available as an option*

frame size
18¼"W x 31"L x 37¾"H
- Height with bassinet basket: 41"H

shown with optional bassinet and pad

P-1110-B-SS
bassinet stand with drawer

features
- Side mounted drawer measures: 16½"W x 21¼"L x 3⅛"H
- Design allows close approach from both sides
- Basket can be raised at either end
- 3" double ball bearing swivel casters
- *Lower shelf available as an option*

frame size
18¼"W x 31"L x 37¾"H
- Height with bassinet basket: 41˝H

shown with optional bassinet and pad

P-1114-SS
bassinet stand with tote box drawers

features
- Design consistent with rooming-in techniques
- Two 10" deep tote boxes accessible from either side
- 4" double ball bearing swivel casters

dimensions
32"W x 20"L x 33"H
- Height with bassinet basket: 41˝H

shown with optional bassinet and pad

P-1115-A-SS
bassinet cabinet

features
- Bassinet carriage slides back to allow working area
- Friction lock secures the bassinet in both open and closed positions
- Removable internal shelf, positioned in middle left compartment
- 4" double ball bearing swivel casters

dimensions
19¾"W x 30⅞"L x 37¼"H
- Height with bassinet 44⅛"

cabinet dimensions
- 17"W x 29½"L x 24⅞"H

drawer frame with removable pan
- 11¼"W x 16½"L x 4"H

shown with optional bassinet and pad

P-1115-SS
bassinet cabinet

features
- Bassinet carriage slides back to allow working area
- Friction lock secures the bassinet in both open and closed positions
- Removable internal shelf, positioned in middle left compartment
- 4" double ball bearing swivel casters

dimensions
19¾"W x 30⅞"L x 37¼"H
- Height with bassinet 44⅛"

cabinet dimensions
- 17"W x 29½"L x 24⅞"H

drawer frame with removable pan
- 11¼"W x 16½"L x 4"H

ST-1833-SS
pediatric scale table

features
- Designed for use with common electronic scales
- Oversize 4" casters for easy movement
- One brake caster forstability

dimensions
33"W x 18"D x 35½"H

OPTIONS

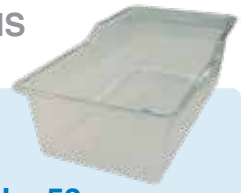

Part No. 53
Bassinet Basket

basket measures
16"W x 30¼"L x 9⅝"H

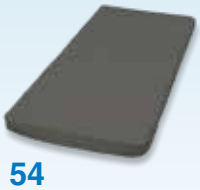

Part No. 54
Bassinet Pad - Grey

pad measures
12½"W x 26½"L x 1" Thick

800.822.3501 • FAX 360.696.1700 • www.pedigo-usa.com

4000 SE Columbia Way • Vancouver, Washington 98661

Proudly Made in the USA

Printed using 100% Clean Wind Power

8060

stryker

Gynnie®
OB/GYN Stretcher

Easy. Multi-functional. Convenient.

Gynnie combines the durability and features of Stryker's standard stretcher with supreme OB/GYN functionality. This multi-functional stretcher is ideal for pelvic exams and can also be utilized for general use.

Pelvic exam conversion
3 easy steps to convert stretcher into a pelvic exam with self-locking stirrups.

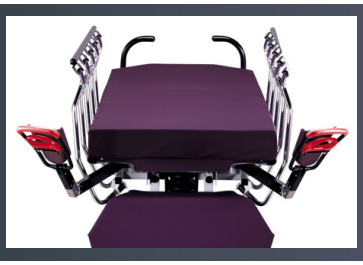

4" Ultra Comfort support surface
Heat sealed seams help prevent fluid collection.

Glideaway siderails
Swings up and out for patient comfort and allows for zero transfer gap when lowered.

Retractable fifth wheel helps improve mobility.

Permanently attached parts to maximize caregivers' time.

Optional calf supports

Dual pedestal hydraulics to help optimize stability.

Four wheel, steel ring brakes with dual side and head activators to help secure platform and accessibility.

8060

stryker

Gynnie
OB/GYN Stretcher

Standard features

- 4″ (10 cm) Ultra Comfort support surface with sealed seams
- 8″ (20 cm) Omni Surface casters with wheel covers
- 26″ (66 cm) wide patient surface
- Dual cylinder pneumatic backrest
- Dual pedestal hydraulics with constant rate descent
- Dual side-mounted foot control hydraulics
- Retractable fifth-wheel steering
- Four-wheel, steel-ring brakes with dual side and head activators
- Glideaway siderails
- Integrated storage tray with oxygen bottle holder
- Permanently-attached folding foot section
- Permanently-attached foot supports
- Pop-up push handles
- Roller bumpers
- Two IV receptacles
- Unique one-handed foot section release lever

Specifications

Model number	1061
Overall length	81″ (205.7 cm)
Overall width	
Siderails up	31.5″ (80 cm)
Siderails down	28″ (71 cm)
Weight capacity	500 lb. (225 kg)
Height range (to litter top)	
High	35.75″ (90.8 cm)
Low	22″ (55.5 cm)
Litter positioning	
Backrest	0°– 90°
Knee gatch	0°– 90°
Trend./Reverse Trend.	±18°
Maximum angle	87.5°
Patient surface	26″ x 75.5″ (66 x 191.5 cm)
Siderails	13″ x 39″ (34 x 99 cm)
Caster diameter	8″ (20 cm)
Break away point from wall	68″ (172.7 cm)

Optional features

- Hoop for drainage basin
- Patient restraints
- Serving/instrument tray
- Siderail pads
- IV poles
  - Permanent folding two- or three-stage at foot end
  - Removable
- Upright oxygen bottle holder
- Extended warranty available intermediate supports
- Upright oxygen bottle holder

Warranty

One year parts, labor and travel or two years parts

Stryker reserves the right to change specifications without notice.

Stryker Corporation or its divisions or other corporate affiliated entities own, use or have applied for the following trademarks or service marks: Gynnie, Ultra Comfort, Stryker. All other trademarks are trademarks of their respective owners or holder.

3800 E. Centre Avenue
Portage, MI 49002 USA
t: 269 329 2100
toll free: 800 327 0770

patienthandling.stryker.com

JUNE 14, 2019

Copyright © 2017 Stryker
Mkt Lit-70 01262005 Rev H.1
Printed in U.S.A.

8066

stryker®

Medical

GoBed® II Med/Surg Bed

Safe. Simple. Mobile.

The acceptable number of adverse events in your facility is zero. With the right technologies and processes in place, potential adverse events often can be predicted and prevented.

Extensive input and feedback from nursing professionals helped qualify the need for a med/surg bed that helps add efficiency and mobility to patient care practices. Numerous one-button or one-handed controls allow caregivers to spend their time helping patients recover quickly in a secure and comforting environment.

The GoBed II features full length siderail coverage to aid in patient safety.

A low bed height of 14.5 inches promotes proper patient positioning for safe entry and exit.

Conveniently located on the footboard, the integrated pump holder and 120-volt outlet help to maximize space at the foot end of the bed.

Available with Stryker's Chaperone® Bed Exit System and Zone Control® technology.

Single-button, in-bed scale provides repeatable weights with the patient in any position.

Complete siderail coverage and 14.5-inch low bed height contribute to a safe patient platform.

Centrally located fifth-wheel helps improve maneuverability and ease transport.

Integrated pump holder and optional 120-volt outlet conveniently located on the footboard.

JUNE 14, 2019

8066

stryker®

Medical

GoBed II Med/Surg Bed

3800 E. Centre Ave.
Portage, MI 49002 U.S.A.
t: 269 329 2100 **f:** 269 329 2311
toll free: 800 787 9537

www.stryker.com

Standard Features

- 14.5-inch (37 cm) low-bed height
- Retractable fifth-wheel steering
- StayPut® retractable bed frame design
- 6-inch (15 cm) casters
- Trend./reverse Trend.
- Four independent electric motors
- Trend. display on footboard (only available with scale option)
- Centrally-located steer and four-wheel brake mechanism
- Four drainage bag hooks
- Eight IV pole/traction equipment sockets
- Roller bumpers
- Manual back-up for head and knee control
- Integrated pump holder
- Nurse controls on footboard and siderails
- Fixed patient controls on siderails
- Degree indicator for head elevation
- Patient restraint locations
- Electronic function lockout controls
- One-handed dampened siderail release
- Auto contour
- Photo-sensitive night light

GoBed II LX: All Standard Features Plus

- Chaperone Bed Exit System
- In-bed scale system
- CPR release

GoBed II EX: All Standard Features Plus

- Chaperone Bed Exit System
- In-bed scale system
- One-button cardiac chair
- CPR release
- Siderail communications package (includes nurse call with speakers, TV, radio, volume, room/read lights)

Specifications

Model Number	FL28C, FL28EX
Overall Length	94.25" (239.4 cm)
Overall Width	
Siderails Up	40" (101.6 cm)
Siderails Down	39" (99.1 cm)
Weight Capacity	500 lb. (227 kg)
Height Range (to litter top)	
High	29" (73.7 cm)
Low (standard with 6" casters)	14.5" (36.8 cm)
Litter Positioning	
Backrest	0°– 60° (siderails down)
Knee Gatch	0°– 28°
Trend./Reverse Trend.	±14°
Retraction	10" (25 cm)
Patient Surface	36" x 84" (91 x 213 cm)
Caster Diameter	6" (15 cm)

Electronics

Agency Approvals	UL60601-1, CSA601.1 and IEC60601-2-38
Volts	100 VAC, 120 VAC, 200 VAC, 220 VAC
Current Leakage	< 100 microamperes
Frequency	50 – 60 Hz
Hospital Grade Plug	Yes

Stryker reserves the right to change specifications without notice.

Optional Features

- Chaperone Bed Exit System
- Chaperone with Zone Control
- In-bed scale system
- CPR release
- Smart TV (includes closed caption, channel up/down and mute)
- Support Surfaces: pressure ulcer prevention and management
- Bed extender with pad
- Pillow speaker interface
- Removable litter covers
- Upright oxygen bottle holder
- IV poles
  - Permanent
  - Removable
- 120-volt auxiliary outlet
- Patient helper system
- Emergency crank handle
- Footboard-mounted monitor tray

Mkt LR-116-07282009 Rev E.4
JUNE 14, 2019
Copyright © 2015 Stryker

FSC
www.fsc.org
MIX
Paper from responsible sources
FSC® C020250

8067

stryker

LD304
Birthing Bed

Your partner in delivery

LD304 birthing bed provides comfort and security for both mom and caregiver. Simple operation, mobility and an ergonomic design provide safety while positioning to mom's comfort.

Convenient controls, such as single-button Trendelenburg and Stryker's powered Skoocher feature, allow customized positioning with minimal effort.

The ergonomic design of Stryker's foot section promotes proper body mechanics to help protect you from back strain and injury.

Length-adjustable footrests provide multiple leg positioning capabilities

Patented Lock-Rite foot section glides off for quick and easy breakdown.

Ultra Comfort Support Surface with integrated, high-memory egg crate topper promotes comfort.

Patented Skoocher feature moves mom closer to the perineal edge of the bed with the touch of a button

8067

stryker

LD304
Birthing Bed

Standard features

- Lock-Rite slide-off foot section
- Lightweight, self-standing foot section
- Glideaway foot supports with six-way adjustability
- Single-button Trend.
- Three-position siderails
- In-rail motion controls with lockout
- 17.5-inch (44 cm) low bed height
- 5-inch (13 cm) Ultra Comfort head and seat support surface
- 3-inch (8 cm) foot mattress
- 6-inch (15 cm) Omni Surface casters with wheel covers
- Locking-caster steering
- Four-wheel, steel-ring brake system with centrally located activation pedal
- 33-inch (84 cm) mattress width with four motor functions (head, bed, foot, Trend.)
- Automatic pelvic tilt
- CPR release
- Manual backup
- Self-storing labor grips
- Plastic fluid basin
- Under-bed night light
- Wood headboard
- Permanent folding three-stage IV pole
- Two year parts and labor warranty

Specifications

Model number	4701
Overall length	93″ (236 cm)
Overall width	
Siderails up	41″ (104 cm)
Siderails down	37″ (94 cm)
Lift capacity	
Bed	500 lb. (226.7 kg)
Foot section	300 lb. (136.0 kg)
Height range (to litter top)	
High	35.5″ (90 cm)
Low	17.5″ (44 cm)
Litter positioning	
Backrest	0°-70°
Pelvic tilt	4°
Maximum Trend.	8°
Patient surface	33″ x 81″ (84 x 206 cm)
Support surface thickness	
Head/seat	5″ (13 cm)
Foot	3″ (8 cm)
Seat depth	
Standard	12.5″ (32 cm)
With Skoocher	12.5-8.5″ (32-22 cm)
Caster diameter	
Standard	6″ (15 cm)
Optional	8″ (20 cm)

Electronics

Agency approvals	C-US UL (120 V AC)
Volts	120 VAC (Domestic) 230 VAC (International)
Ampere rating	10 A
Current leakage	< 300 microamperes
Frequency	60 Hz (Domestic) 50/60 Hz (International)
Hospital grade plug	Yes
EMC Compatible	Yes
Motor function	Bed, head, foot, Skoocher (optional), Trend.

Stryker reserves the right to change specifications without notice.

Optional features

- Patented Skoocher adjusts seat depth from 12.5 inches to 8.5 inches (32 cm to 22 cm)
- Choice of removable or permanent calf supports
- Lumbar pillow and seat pillow
- Mattress overlay
- Basin liners
- Wallsaver quick-release connecting kit
- Siderail communications — includes nurse call only or nurse call with speaker, TV, radio, volume, room/read lights
- Smart TV — includes channel up/down, mute
- Pendant control
- Pendant port
- 8-inch (20 cm) casters
- Labor bar
- Linen for head and foot mattresses
- Extended warranty

Mkt Lit-1702 10 DEC 2018 REV A
Copyright © 2018 Stryker

3800 E. Centre Avenue
Portage, MI 49002 USA
t: 269 329 2100
toll free: 800 327 0770

stryker.com

JUNE 14, 2019

Stryker Corporation or its divisions or other corporate affiliated entities own, use or have applied for the following trademarks or service marks: Lock-Rite, Skoocher, Stryker. All other trademarks are trademarks of their respective owners or holder.

8075

KICK BUCKET, STAINLESS STEEL

NEED TO DETERMINE IF KICKSTAND AND COVER ARE REQUIRED

SKU: BA007Category: Buckets, Trays & Strainers

- **Dimensions:** 12.5 qt (11.8 L), 12″ (30.5 cm) top diameter, 7.875″ (2o cm) base diameter, 10″ (25 cm) depth
- **Material:** Non-corrosive stainless steel

AVERAGE COST: FOR 15 OR MORE $440

SOURCE: https://www.mopec.com/product/set-kickstand-bucket-cover-2

Loaded Emergency Crash Cart

#LC037930

The Complete Emergency Crash Cart Kit contains a 6 drawer Crash Cart and all of the equipment that should be attached to or kept on top of the cart. It also contains the equipment and supplies necessary to prepare for adult and pediatric infusion and intubation, as well as the most commonly used medications. Explore our predesigned kits or design your own!

CS037951 - 6 Drawer Tall Steel Emergency Cart Included

Equipment and Supplies	
(1) Cardiac Board and Brackets	(1) Set of Utility Hooks, Railing and Supports
(1) IV Pole and Brackets	(100) Plastic Seals
(1) Collapsible Side Shelf	

LC037901 - Drawer 1 - Simulated Medications	
(2) Amiodarone 150 mg/3 ml Vial	(2) Lidocaine 100 mg 5 ml Syringes
(2) Atropine 1 mg/10 ml Syringe	(2) Sodium Bicarbonate 50 mEq/50 ml Syringe
(2) Calcium Chloride 1 gm/10 ml Syringe	(2) Vasopressin 20 units/ml 1 ml Vial
(2) Dextrose 50% 0.5 mg/ml 50 ml Syringe	(10) Povidone-Iodine Swabstick
(2) Dopamine Vial	(1) Box Alcohol Swabs
(2) Epinephrine 1 mg/10 ml (1:10,000) Syringe	

LC037902 - Drawer 2 - Adult Intubation Supplies	
(1) 6.0 Adult Microcuff ET Tube	(2) Adult Stylet: 14 FR
(1) 7.0 Adult Microcuff ET Tube	(1) CO2 Colorimetric Indicator
(1) 8.0 Adult Microcuff ET Tube	(1) Flashlight
(1) 9.0 Adult Microcuff ET Tube	(2) Luer Lock Syringe: 35 mL
(1) Twill Tape	(1) Magill Forceps: Adult
(10) Packets Sterile Lubricating Jelly	(1) Disposable Macintosh #3 Laryngoscope Blade
(3) Bite Block	(1) Disposable Macintosh #4 Laryngoscope Blade
(1) Nasopharyngeal Airways: 26 FR	(1) Disposable Miller #3 Laryngoscope Blade
(1) Nasopharyngeal Airways: 30 FR	(1) Disposable Laryngoscope Handle
(1) Nasopharyngeal Airways: 32 FR	(2) Plastic Airway: 90 mm
(1) Box Tongue Depressor	(2) Plastic Airway: 100 mm
(1) Kelly Forceps	

7013 Orchard Road, Suite 110, West Bloomfield, Michigan 48322 USA
Phone: 248-855-3966 | 877-593-6011 | Fax: 248-671-1550
www.DiaMedicalUSA.com | www.MedMattress.com | Info@DiaMedicalUSA.com

LC037903 - Drawer 3 - Pediatric Intubation Supplies	
(1) 3.0 mm Microcuff ET Tube 35111	(2) Huggable ECG Electrode
(1) 3.5 mm Microcuff ET Tube 35112	(2) Neonatal Armboard: 3" x 1"
(1) 4.0 mm Microcuff ET Tube 35113	(2) Infant Armboard: 3" x 2"
(1) 4.5 mm Microcuff ET Tube 35114	(2) Spinal Needle: 22 GA - 3½
(1) 5.5 mm Microcuff ET Tube 35115	(2) Insyte Autoguard: 22 GA - 0.9 x 25 mm
(2) Neonatal Stylet 6 FR	(2) Insyte Autoguard: 24 GA - 0.75" x 19 mm
(1) Disposable Miller Laryngoscope Blade: #0	(5) Skin Protectant Swabstick
(1) Disposable Miller Laryngoscope Blade: #1	(1) Infant Feeding Tube: 5 FR
(1) Disposable Miller Laryngoscope Blade: #2	(1) Salem Sump (NG/OG): 10 FR
(1) Disposable Macintosh Laryngoscope Blade: #2	(1) Suction Catheter Kit: 6 FR
(1) Disposable Laryngoscope Handle	(1) Suction Catheter Kit: 8 FR
(1) Magill Forceps (Pediatric)	(1) Suction Catheter Kit: 10 FR
(2) Airway Size 40 mm	(1) Suction Catheter Kit: 12 FR
(2) Airway Size 60 mm	

LC037904 - Drawer 4 - IV Start Supplies	
(2) IV Start Kit	(1) Insyte Autoguard: 18 G 1.16" 1.3 x 30 mm
(1) Angiocath. 14 G 5.25" 2.1 x 133 mm	(1) Insyte Autoguard: 20 G 1.16" 1.1 x 30 mm
(3) Chloraprep	(1) Needle: 18 G x 1½"
(3) Luer Lock Syringe: 10 mL	(2) Needle: 18 G x 3½"
(2) Luer Lock Syringe: 6 mL	(2) Needle: 20 G x 1½"
(2) Luer Lock Syringe: 3 mL	(2) Needle: 19 G x 1½" Filter Needle
(2) Luer Lock Syringe: 1 mL	(2) Transpore Tape: 1"
(2) TB Syringe: 25 G 5/8" Syringe – 1 mL	(5) Monoject SmarTip Needleless Vial Access Cannula
(3) Tourniquet	(1) VAMP VMP400
(1) Insyte Autoguard: 14 G 1.75" 2.1 x 45 mm	(3) Way Stopcock
(1) Insyte Autoguard: 16 G 1.16" 1.7 x 30 mm	(1) Smallbore 7" Ext. Set with MicroClave Connector

LC037905 - Drawer 5 - IV Supplies and Tubing	
(2) Luer Lock Syringe: 30 mL	(1) Betadine Prep Pads
(2) Luer Lock Syringe: 20 mL	(2) Adhesive Tape 1"
(1) Catheter Tip Syringe: 60 mL	(1) IV Gravotu Set
(1) Portex Pro-Vent Arterial Blood Sampling Kit: 3 mL	(2) Sodium Chloride 0.9% - 100 mL Bag
(1) Adult Armboard	(2) Sodium Chloride 0.9% - 1000 mL Bag
(1) Betadine solution 4 oz	(2) Dextrose 5% - 250 mL Bag
	(2) Sodium Chloride Flush Syringe - 10 mL

7013 Orchard Road, Suite 110, West Bloomfield, Michigan 48322 USA
Phone: 248-855-3966 | 877-593-6011 | Fax: 248-671-1550
www.DiaMedicalUSA.com | www.MedMattress.com | Info@DiaMedicalUSA.com

LC037906 - Drawer 6 - Common Supplies	
(1) Box Surgical Gloves - 6.0	(1) Yankauer with Suction Tubing
(1) Box Surgical Gloves - 6.5	(5) Sterile Field
(1) Box Surgical Gloves - 7.0	(2) Suction Cath Kit 14 FR
(1) Box Surgical Gloves - 7.5	(2) Slip Tip Syringe: 10 mL
(1) Box Surgical Gloves - 8.0	(2) Slip Tip Syringe: 12 mL
(1) Box Sensi Care Gloves: Large – Non Sterile and Latex	(5) Kerlix Sponges
(1) Suture: 3.0 Silk	(1) Cricothyroidotomy Pack
(1) Needle Holder	

7013 Orchard Road, Suite 110, West Bloomfield, Michigan 48322 USA
Phone: 248-855-3966 | 877-593-6011 | Fax: 248-671-1550
www.DiaMedicalUSA.com | www.MedMattress.com | Info@DiaMedicalUSA.com

Loaded Pediatric Crash Cart

#LC017910

CS037930 - 9 Drawer Pediatric Crash Cart Included

LC017910 - Drawer 1 - Simulated Medications
(2) Adenosine Syringe
(1) Atropine Syringe
(1) Amiodarone Vial
(1) Calcium Chloride Vial
(1) Dextrose 50% Vial
(1) Dextrose 50% Syringe
(2) Epinephrine 1:10000 Syringe
(1) Epi-Pen
(1) Lidocaine 2% Syringe
(1) Naloxone (Narcan) 0.4 mg/ml Vial
(1) Naloxone (Narcan) 1 mg/ml Syringe
(3) Sodium Bicarbonate 4.2% Syringe
(1) Broselow tape

The Complete 9 Drawer Pediatric Cart Kit comes with a full size, color coded 9 drawer Pediatric/Braslow cart, as well as all the supplies needed to stock drawers 1 through 9. Explore our predesigned kits or design your own!

LC017902 - Drawer 2 - Patient Weight: 0.5 kg - 8 kg	
VASCULAR ACCESSORIES	AIRWAY EQUIPMENT
(1) IV Start Kit	(1) Cuffed Endotracheal Tube: 3.0 mm
(2) IV Catheter: 22 Gauge	(1) Cuffed Endotracheal Tube: 4.0 mm
(2) IV Catheter: 24 Gauge	(1) Small Stylet: 6 FR
(2) Butterfly Needle: 23 Gauge	(1) Suction Catheter: 6 FR
(2) IV Extension Set: Male to Female	(1) Suction Catheter: 8 FR
(2) IV Extension Set: Male to Male	(1) Nasogastric Tube: 5 FR - 15”
(2) 3-Way Stopcock	(1) Nasogastric Tube: 8.0 FR - 15”
(5) Sodium Chloride Flush Syringe: 3 mL	(1) Lubrication Packet
(5) Sodium Chloride Flush Syringe: 10 mL	(1) Syringe: 35 mL
(2) Safety Needles 1.5”: 22 Gauge	(1) Nasal Airway Rusch: 12 FR
(2) Safety Needles 1.5”: 25 Gauge	(1) Oral Airway #0: 50 mm
(2) Luer Lock Syringe: 60 mL	(1) Oral Airway #1: 60 mm
(2) Luer Lock Syringe: 20 mL	
(2) Luer Lock Syringe: 10 mL	
(2) Luer Lock Syringe: 3 mL	
(2) Luer Lock Syringe: 1 mL	

5807 W. Maple Road, Suite 175, West Bloomfield, Michigan 48322 USA
Phone: 248-855-3966 | 877-593-6011 | Fax: 248-671-1550
www.DiaMedicalUSA.com | www.MedMattress.com | Info@DiaMedicalUSA.com

LC017903 - Drawer 3 - Patient Weight: 9 kg - 11 kg	
VASCULAR ACCESSORIES	AIRWAY EQUIPMENT
(1) IV Start Kit	(1) Cuffed Endotracheal Tube: 3.5 mm
(2) IV Catheter: 22 Gauge	(1) Cuffed Endotracheal Tube: 4.0 mm
(2) IV Catheter: 24 Gauge	(1) Small Stylet: 6 FR
(2) Butterfly Needle: 23 Gauge	(1) Suction Catheter: 8 FR
(2) IV Extension Set: Male to Female	(1) Suction Catheter: 10 FR
(2) IV Extension Set: Male to Male	(1) Nasogastric Tube: 8.0 FR - 15”
(2) 3-Way Stopcock	(1) Lubrication Packet
(5) Sodium Chloride Flush Syringe: 3 mL	(1) Syringe: 35 mL
(5) Sodium Chloride Flush Syringe: 10 mL	(1) LMA # 1.5
(2) Safety Needles 1.5”: 22 Gauge	(1) Nasal Airway Rusch: 16 FR
(2) Safety Needles 1.5”: 25 Gauge	(1) Oral Airway #1: 60 mm
(2) Luer Lock Syringe: 60 mL	
(2) Luer Lock Syringe: 20 mL	
(2) Luer Lock Syringe: 10 mL	
(2) Luer Lock Syringe: 3 mL	
(2) Luer Lock Syringe: 1 mL	

LC017904 - Drawer 4 - Patient Weight: 12 kg - 14 kg	
VASCULAR ACCESSORIES	AIRWAY EQUIPMENT
(1) IV Start Kit	(1) Cuffed Endotracheal Tube: 4.0 mm
(2) IV Catheter: 20 Gauge	(1) Cuffed Endotracheal Tube: 4.5 mm
(2) IV Catheter: 22 Gauge	(1) Small Stylet: 6 FR
(2) Butterfly Needle: 23 Gauge	(1) Suction Catheter: 10 FR
(2) IV Extension Set: Male to Female	(1) Lubrication Packet
(2) IV Extension Set: Male to Male	(1) Syringe: 35 mL
(2) 3-Way Stopcock	(1) LMA # 2.0
(5) Sodium Chloride Flush Syringe: 3 mL	(1) Oral Airway #2: 60 mm
(5) Sodium Chloride Flush Syringe: 10 mL	
(2) Safety Needles 1.5”: 22 Gauge	
(2) Safety Needles 1.5”: 25 Gauge	
(2) Luer Lock Syringe: 60 mL	
(2) Luer Lock Syringe: 20 mL	
(2) Luer Lock Syringe: 10 mL	
(2) Luer Lock Syringe: 3 mL	
(2) Luer Lock Syringe: 1 mL	

5807 W. Maple Road, Suite 175, West Bloomfield, Michigan 48322 USA
Phone: 248-855-3966 | 877-593-6011 | Fax: 248-671-1550
www.DiaMedicalUSA.com | www.MedMattress.com | Info@DiaMedicalUSA.com

LC017905 - Drawer 5 - Patient Weight: 15 kg - 18 kg	
VASCULAR ACCESSORIES	AIRWAY EQUIPMENT
(1) IV Start Kit	(1) Cuffed Endotracheal Tube: 4.5 mm
(2) IV Catheter: 18 Gauge	(1) Cuffed Endotracheal Tube: 5.0 mm
(2) IV Catheter: 20 Gauge	(1) Small Stylet: 6 FR
(2) IV Catheter: 22 Gauge	(1) Suction Catheter: 10 FR
(2) Butterfly Needle: 23 Gauge	(1) Suction Catheter: 12 FR
(2) IV Extension Set: Male to Female	(1) Lubrication Packet
(2) IV Extension Set: Male to Male	(1) Syringe: 35 mL
(2) 3-Way Stopcock	(1) LMA # 2.5
(5) Sodium Chloride Flush Syringe: 3 mL	(1) Oral Airway #2: 70 mm
(5) Sodium Chloride Flush Syringe: 10 mL	
(2) Safety Needles 1.5": 22 Gauge	
(2) Safety Needles 1.5": 25 Gauge	
(2) Luer Lock Syringe: 60 mL	
(2) Luer Lock Syringe: 20 mL	
(2) Luer Lock Syringe: 10 mL	
(2) Luer Lock Syringe: 3 mL	
(2) Luer Lock Syringe: 1 mL	

LC017906 - Drawer 6 - Patient Weight: 19 kg - 23 kg	
VASCULAR ACCESSORIES	AIRWAY EQUIPMENT
(1) IV Start Kit	(1) Cuffed Endotracheal Tube: 5.0 mm
(2) IV Catheter: 18 Gauge	(1) Cuffed Endotracheal Tube: 5.5 mm
(2) IV Catheter: 20 Gauge	(1) Medium Stylet: 10 FR
(2) Butterfly Needle: 23 Gauge	(1) Suction Catheter: 10 FR
(2) IV Extension Set: Male to Female	(1) Suction Catheter: 12 FR
(2) IV Extension Set: Male to Male	(1) Lubrication Packet
(2) 3-Way Stopcock	(1) Catheter Tip Syringe: 60 mL
(5) Sodium Chloride Flush Syringe: 3 mL	(1) LMA # 3.0
(5) Sodium Chloride Flush Syringe: 10 mL	(1) Oral Airway #2: 70 mm
(2) Safety Needles 1.5": 22 Gauge	(1) Oral Airway #3: 80 mm
(2) Safety Needles 1.5": 25 Gauge	
(2) Luer Lock Syringe: 60 mL	
(2) Luer Lock Syringe: 20 mL	
(2) Luer Lock Syringe: 10 mL	
(2) Luer Lock Syringe: 3 mL	
(2) Luer Lock Syringe: 1 mL	

5807 W. Maple Road, Suite 175, West Bloomfield, Michigan 48322 USA
Phone: 248-855-3966 | 877-593-6011 | Fax: 248-671-1550
www.DiaMedicalUSA.com | www.MedMattress.com | Info@DiaMedicalUSA.com

LC017907 - Drawer 7 - Patient Weight: 24 kg - 50 kg	
VASCULAR ACCESSORIES	AIRWAY EQUIPMENT
(1) IV Start Kit	(1) Cuffed Endotracheal Tube: 5.5 mm
(2) IV Catheter: 18 Gauge	(1) Cuffed Endotracheal Tube: 6.0 mm
(2) IV Catheter: 20 Gauge	(1) Medium Stylet: 10 FR
(2) Butterfly Needle: 23 Gauge	(1) Suction Catheter: 12 FR
(2) IV Extension Set: Male to Female	(1) Suction Catheter: 14 FR
(2) IV Extension Set: Male to Male	(1) Lubrication Packet
(2) 3-Way Stopcock	(1) Catheter Tip Syringe: 60 mL
(5) Sodium Chloride Flush Syringe: 3 mL	(1) Nasal Airway Rusch: 26 FR
(5) Sodium Chloride Flush Syringe: 10 mL	(1) Nasal Airway Rusch: 28 FR
(2) Safety Needles 1.5": 22 Gauge	(1) Oral Airway #2: 70 mm
(2) Safety Needles 1.5": 25 Gauge	(1) Oral Airway #3: 80 mm
(2) Luer Lock Syringe: 60 mL	
(2) Luer Lock Syringe: 20 mL	
(2) Luer Lock Syringe: 10 mL	
(2) Luer Lock Syringe: 3 mL	
(2) Luer Lock Syringe: 1 mL	

LC017908 - Drawer 8 - Patient Weight: 50 kg +	
VASCULAR ACCESSORIES	AIRWAY EQUIPMENT
(1) IV Start Kit	(1) Cuffed Endotracheal Tube: 7.0 mm
(2) IV Catheter: 14 Gauge	(1) Cuffed Endotracheal Tube: 8.0 mm
(2) IV Catheter: 18 Gauge	(1) Large Stylet: 12 FR
(2) IV Catheter: 20 Gauge	(1) Suction Catheter: 12 FR
(2) Butterfly Needle: 23 Gauge	(1) Suction Catheter: 14 FR
(2) IV Extension Set: Male to Female	(1) Lubrication Packet
(2) IV Extension Set: Male to Male	(1) Catheter Tip Syringe: 60 mL
(2) 3-Way Stopcock	(1) LMA # 4
(5) Sodium Chloride Flush Syringe: 3 mL	(1) Nasal Airway Rusch: 30 FR
(5) Sodium Chloride Flush Syringe: 10 mL	(1) Nasal Airway Rusch: 32 FR
(2) Safety Needles 1.5": 22 Gauge	(1) Oral Airway #4: 90 mm
(2) Safety Needles 1.5": 25 Gauge	(1) Oral Airway #5: 100 mm
(2) Luer Lock Syringe: 60 mL	
(2) Luer Lock Syringe: 20 mL	
(2) Luer Lock Syringe: 10 mL	
(2) Luer Lock Syringe: 3 mL	
(2) Luer Lock Syringe: 1 mL	

5807 W. Maple Road, Suite 175, West Bloomfield, Michigan 48322 USA
Phone: 248-855-3966 | 877-593-6011 | Fax: 248-671-1550
www.DiaMedicalUSA.com | www.MedMattress.com | Info@DiaMedicalUSA.com

LC017909 - Drawer 9 - Common Supplies	
AIRWAY EQUIPMENT	VASCULAR ACCESS EQUIPMENT
(1) Laryngoscope Handle: Small	(2) 0.9% NaCl IV Bag: 1000 mL
(1) Laryngoscope Handle: Large	(2) 5% Dextrose IV Bag: 500 mL
(1) Laryngoscope Bulbs: Small – Pack of 6	(5) Tegaderm Dressings
(1) Laryngoscope Bulbs: Large – Pack of 6	(5) Blank IV Lables
(1) Miller Blade: Size 0	(50) Gauze Sponge: 2” x 2”
(1) Miller Blade: Size 1	(10) Skin Protectant Wipe
(1) Miller Blade: Size 2	(25) Tourniquet
(1) Mac Blade: Size 2	(3 Pairs) Sterile Gloves: Size 6.0
(1) Mac Blade: Size 3	(3 Pairs) Sterile Gloves: Size 7.0
(1) McGill Forceps	(3 Pairs) Sterile Gloves: Size 8.0
(5) Bulb Syringe	MISCELLANEOUS EQUIPMENT
(1) Yankauer Suction Tube	(1 Box) Non Sterile Gloves: Small
(3) White Tape Rolls: ½ Inch, 1 Inch	(1 Box) Non Sterile Gloves: Medium
(1) Pediatric Non-Rebreather Mask	(1 Box) Non Sterile Gloves: Large
(5) Basic Face Mask	(1) Flashlight
(1) Nasal Cannula	(5) Isolation Gown
(1) Nipple Adaptors	(4) Mask with Face Shield
(1) Stethoscope	(1 Box) Isolation Mask
(1) Peep Valve	

5807 W. Maple Road, Suite 175, West Bloomfield, Michigan 48322 USA
Phone: 248-855-3966 | 877-593-6011 | Fax: 248-671-1550
www.DiaMedicalUSA.com | www.MedMattress.com | Info@DiaMedicalUSA.com

8166

650 Ford Street
Colorado Springs, CO 80915
Toll:(800)433-4064 * Ph: (719)637-0300
Fax:(719)597-8273 * www.harloff.com

Aluminum Universal Line Super 7 Drawer Procedure/Nurse Supply Cart with Basic Electronic Pushbutton Lock #AL810E7

Harloff's 20 years of innovation in hospital cart design and construction has resulted in the Universal Line. Its modern appearance incorporates industry-leading standard features with flexible configuration options.

Color Shown is Beige.
Additonal Colors Available

Specifications

Construction:

- Aluminum construction

Features:

- Internal Pullout shelf on left side
- Basic Electronic Pushbutton Lock
- Key Lock Override
- Factory Set User and Supervisor Code
- Cabinet may be programmed in the field
- 32.5" of vertical drawer space
- Cabinet design allows for customized drawer configurations
- Painted steel top rail / push handle
- Removable plastic top
- Protective pontoon bumpers
- Extended caster footprint for stability when drawers are extended
- 5" (12.7 cm) ball-bearing premium casters, all full swivel- one tracking, one braking
- Ball-bearing full extension drawer slides
- Cart is delivered wheels-on and mostly assembled
- Pre-drilled hole locations for standard accessories – many are pre-threaded for ease of installation
- Latex free
- Durable, hard-baked powder coat finish available in 16 colors
- Twelve year manufacturer's warranty

Drawer Configuration:

- (5) – 3.25" (8.3 cm)
- (1) – 6.5" (16.5 cm)
- (1) – 9.75" (24.8 cm)

Internal Drawer Dimensions:

- 23" W x 17" D (58.4 cm W x 43.2 cm D)

Assembled Cart Dimensions:

- 48" H x 31" W x 24.75" D (121.9 cm H x 78.7 cm W x 62.9 cm D)
- Cart weight: 122 pounds (55.5 kg)
- Approximate shipping weight: 152 pounds (69 kg)

8181

stryker

Cub®
Pediatric Crib

Safe. Access. Ease of use.

When you're using our products that are developed with safety and ease-of-use at the forefront of design, you can feel confident you're giving your patients the best care possible. The Cub Pediatric Crib has a simple, safe design that's warm friendly appearance cultivates a comforting environment for small children and their families.

Swing-open access doors allow convenient patient care without disturbing a sleeping child. The access doors have built in safety features to help ensure a child cannot open it from the inside.

All four siderails can be lowered to provide unobstructed access which allows caregivers to have 360° access.

All activation points are colored red and require two adult size hand movements to initiate. This helps to ensure movements are deliberate and the patient remains in the crib.

Retractable fifth wheel helps improve caregiver mobility.

Retracting backrest helps eliminate head-end gap while raising the head end of the stretcher.

Counterbalance system on siderail for easy raising and lowering.

Optional protective top can be equipped with intermediate support position on each side.

Optional integrated scale system obtains accurate weights with the child in any position.*

Multiple sticker color options allow you to customize the stretcher for identification purposes.

Red Blue Gray Green Purple Burgundy

*The scale system allows the reading of a patient's weight in pounds (lb) or kilograms (kg) with a ± 0.5 lb (0.2 kg) at 50 lb or less ± 1.01 lb (0.4 kg) at ≥ 50 lb (22 kg).

8181

stryker

Cub
Pediatric Crib

Standard features

- 4″ (10 cm) Ultra Comfort support surface
- Manually-operated pneumatic-assist backrest
- Manual foot prop
- Siderail with 9″ (23 cm) mandatory stop
- Counterbalance system on siderail for easy raising and lowering
- Oxygen bottle holder
- Access doors at all four corners
- Fully-lowerable side rails provide unobstructed access around entire unit
- Retractable fifth-wheel steering
- 6″ (15 cm) Omni Surface™ casters
- Central-locking brake system
- Dual side-mounted foot control hydraulics
- Uni-lower pedal
- Hands-free Trendelenburg and reverse Trendelenburg

Warranty

- One year parts, labor and travel or two years parts

Specifications

Model number	FL19H
Overall length and width	
No accessory supports	65.5″ x 37″ (166 x 94 cm)
With accessory supports	72.25″ x 37.5″ (184 x 95 cm)
Weight capacity	400 lb. (181 kg)
Safe working load	100 lb. (45 kg)
Height range (to litter top)	
High	40″ (102 cm)
Low	33″ (84 cm)
Litter positioning	
Manual activated	0° / 25° / 40° / 55°
Pneumatic assist	0 - 50°
Trend./reverse Trend.	±9.5°
Foot section angle	0° / 6° / 12°
Support surface	30.13″ x 58.25″ (76.5 x 148 cm)
Caster diameter	6″ (15 cm)

Optional features

- Integrated scale system
  (scale system is not CE marked)
- Siderail without 9″ (23 cm) mandatory stop
- Accessory supports with roller bumpers
  (head, foot or both ends)
- Chart shelf
- IV caddy
- Monitor tray
  (not compatible at foot-end when scale option is selected)
- Oxygen bottle retaining ring
- Siderail pads
- IV poles
  - Permanent folding two- or three-stage
  - Standard removable
- Retractable protective top with or without intermediate supports
- Upright oxygen bottle holder

Stryker reserves the right to change specifications without notice.

Stryker Corporation or its divisions or other corporate affiliated entities own, use or have applied for the following trademarks or service marks: Cub, Stryker. All other trademarks are trademarks of their respective owners or holder.

3800 E. Centre Avenue
Portage, MI 49002 USA
t: 269 329 2100
toll free: 800 327 0770

patienthandling.stryker.com

JUNE 14, 2019

Copyright © 2017 Stryker
Mkt Lit-62-01262005 Rev K.3
Printed in the U.S.A.

8201
8202a

HEARTSINE 350P AED & SMALL WALL CABINET KIT

What's Included:

- Brand New Heartsine Samaritan AED
- 8 Year Manufacturer's Warranty Adult Pad-Pak (electrode pads/battery combo pack)
- Quick Reference Card
- Heart Smart AED Wall Cabinet w/Standard Alarm (HST-CAB01)
- Heart Smart AED Projection Wall Sign (2-Way) (HST-WS01)
- Carrying Case
- Training DVD (downloadable)
- Medical Prescription / Authorization
- Heart Smart CPR/AED Rescue Kit (HSRK-10)
- Heart Smart Inspection / Maintenance Tag (HST-ACC01)
- Heart Smart "AED Equipped Facility" Decal (HST-ACC02)
- Cloud Based AED Program Management

Small Cabinet

Width: 14”
Height: 11 5/8”
Depth: 6”

Product Code: BUS-PKG-SAM (AVERAGE RETAIL COST $1295

SOURCE: https://www.heartsmart.com/heartsine-samaritan-pad-aed-defibrillator-package-p/bus-pkg-sam.htm

JUNE 14, 2019

INSTALLATION INSTRUCTIONS: LIFESTART® AED CABINETS

SURFACE MOUNT METAL OR WOOD FRAMING:

1. Remove all hardware and glazing, unlock cabinet if provided.
2. Use holes provided in back wall of cabinet tub for attaching to studding. If wall configuration does not allow for that, then follow step 2 below; otherwise, skip to step 4. Hollow wall anchors may be used in a maximum of (2) positions. The other two must be firmly anchored in framing members.
3. [Drilling Additional Holes] Drill (2) 1/8" holes through back wall of tub that correspond to location of framing members.
4. Place cabinet in position, attach with Universal # 10 x 1-1/2" self-drilling screws.
5. Check cabinet door for freedom of movement. If it binds, shim as necessary to remove any racking of tub attachments or studding.

RECESSED METAL OR WOOD FRAMING:

1. Install a framed opening above, below and at both sides of cabinet opening at specified location. Wall opening width, height and depth must correspond with dimensions indicated in catalog or detail and submittal sheet.
2. Use holes provided in cabinet tub for attaching to studding. If wall configuration does not allow for that, then follow step 3 below; otherwise, skip to step 4.
3. [Drilling Additional Holes] Drill (2) 1/8" holes through tub on each side of cabinet.
4. Place cabinet in position, attach with Universal # 10 x 1-1/2" self-drilling screws.
5. Check cabinet door for freedom of movement. If it binds, shim as necessary to remove any racking of tub attachments or studding.

MASONRY:

1. Leave or create an opening in the masonry wall at specified location. Wall opening width, height and depth must correspond with dimensions indicated in catalog or detail and submittal sheet.
2. Use holes provided in cabinet tub for attaching to studding. If wall configuration does not allow for that, then follow step 3 below; otherwise, skip to step 4.
3. [Drilling Additional Holes] Drill (2) 1/8" holes through tub on each side of cabinet.
4. Place cabinet in position and mark location of attachments on masonry using 1/8" holes as marking guides.
5. Remove cabinet and drill appropriately sized holes for your masonry anchors into masonry at marked points, and install anchors.
6. Place cabinet in position and attach with screws into masonry anchors.
7. Check cabinet door for freedom of movement. If it binds, shim as necessary to remove any racking of tub attachments or studding.

ON/OFF Key Switch Located on Front or Side of Cabinet

Alarm compartment 9-volt battery located inside

INSTALL GLAZING, HANDLE AND ALARMS:

1. Remove protective plastic from plexiglass or glass and install decal if intended for glass.
2. Align glazing on inside of door, holding in place while installing glass mounting clips on inside of door with sheet metal screws. (2) glass clips are provided for each side of door. Mounting holes are provided. Do not over-tighten.
3. Install handle with machine thread screws and roller catch or SAF-T-LOK™ in door.
4. Commander alarm is pre-installed in cabinet. See page 2 for operating instructions.

See photos below for more details of installing door components.

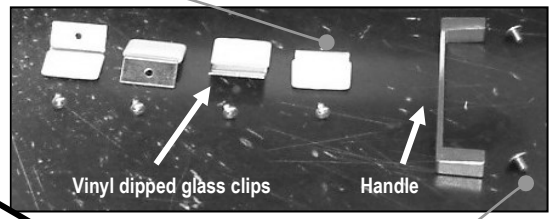

Adjustable roller catch catch

JL INDUSTRIES

ACTIVAR INC. www.activarcpg.com
Construction Products Group

SEE SEPARATE FIRE-RATED INSTALLATION INSTRUCTIONS FOR FIRE-RATED CABINETS

Copyright 2015 Activar

14I-REV B

HEADQUARTERS & JL:4450 WEST 78TH ST CIRCLE, BLOOMINGTON, MN 55435-5416 **PH**: 800-554-6077 **FAX:** 952-835-2218 **EMAIL:** SALES@ACTIVARCPG.COM **WWW.ACTIVARCPG.COM** 8/21/15
ACPG WEST COAST/SAMSON: COMMERCE CA **ACPG WAREHOUSES**: FORT MYERS FL, ATLANTA GA, LANCASTER PA, DALLAS TX, COMMERCE CA , CHICAGO IL, SEATTLE WA, FARGO ND, OMAHA NE

INSTALLATION INSTRUCTIONS: LIFESTART® AED CABINETS

COMMANDER ALARM OPERATING INSTRUCTIONS & TROUBLE SHOOTING GUIDE

AED cabinets comes standard with a 9-volt battery operated “Commander Alarm” and 2 keys that turn the alarm on or off. Alarm controller is a chrome key switch that is located on the exterior of the cabinet—either the front or the side.

Alarm Operation

1. Key in the vertical (Off) position alarm will not sound
2. Key in the horizontal (On) position - Door is opened - Alarm will sound – Close to stop alarm.
3. Key switch is turned to the vertical (Off) position when the door is opened – The Alarm will stop.

Maintenance

Replace 9-Volt battery yearly or as needed. Open alarm compartment by twisting the key or a coin inserted into the slot at the top of the unit.

Trouble Shooting Guide

1. Alarm Key Switch On – Door Open – Alarm Not Sounding: Change Battery
2. Alarm Key Switch On – Door Closed – Alarm Continues to Sound: Test by opening door & pushing in the plunger switch with finger, then turn on the alarm. If alarm does not come on until you release the plunger switch, Reposition the alarm compartment.

Detail of Alarm Compartment

Fire-Rated Wall Note:
See separate installation instructions for Fire-rated cabinets.

8570d

Welch Allyn Green Series Medical Exam and Procedure Lights

GS Exam Light IV

GS Exam Light IV

8570d

> Perfect for the OB/GYN office or for specialties that require very focused light in specific areas

> One LED with 3X the typical light output than halogen

> Highly flexible light pipe that is twice as long as conventional pipes with a compact, unobtrusive head that ensures pinpoint accuracy

GS 300 General Exam Light

GS 300 General Exam Light

> Ideal for primary care facilities, emergency rooms, outpatient facilities and dermatology

> One LED provides the perfect combination of intense light output and cool operation, all delivered in a compact design

> Affordable price and rugged performance

GS 600 Minor Procedure Light

GS 600 Minor Procedure Light

> Ideal for minor procedures and exams in any healthcare environment

> Touchless intensity controls provide the output you need, when you need it

> Features 3 LEDs and a wider head specifically for demanding viewing conditions that require exceptionally good light

GS 900 Procedure Light

GS 900 Procedure Light

> Perfect for minor procedures/procedures in the hospital, ambulatory care center, outpatient facility or physician's office

> Features 6 LEDs with intensity controls, outstanding durability, extraordinary maneuverability and unparalleled spot quality

> Ceiling mount option gives ability to maximize floor space and direct light wherever it is needed during a procedure

note: when ordering stand is sold separately!

A VARIETY OF MOUNTING OPTIONS AVAILABLE:

#44215
12" Wall Mount Extension

(Order separately with #44610 or #44410 for setup)

24" High Standard Stand

(shipped with #44400 or #44600)

8570d stand required

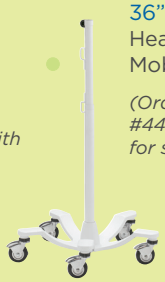

36" High #48960 Heavy Duty/Tall Mobile Stand

(Order separately with #44610 or #44410 for setup)

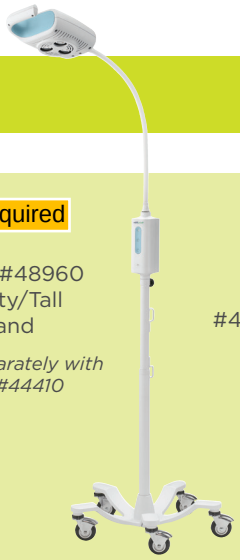

#44900

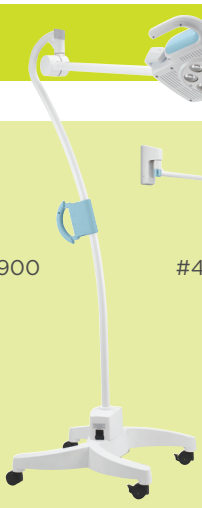

#44900-W

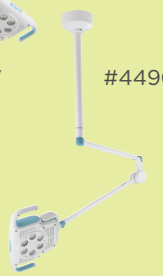

#44900-C

JUNE 14, 2019

Appendix A: Specifications

Charging station power supply classification: US, Canada, & International; Class I and internally powered

Characteristic	Specification
Input	100-240v / 50-60Hz 160-80 mA
Output	5v DC 1400 mA
Category	Not AP/APG Equipment

Physical specifications

Characteristic	Specification
Illuminator	1.96 W x 1.37 D x 3.74 H in; 50 W x 35 D X 95 H mm
Charger	3.14 x 4.33 x 2.55-4.60 in; 80 W x 110 D X 65-117 H mm
Power supply	1.24 W x 2.16 L x 1.61 D in; 31.5 W x 55 L x 41 D mm
LED radiation output	<6.67mW at 400-750 wavelengths
Battery cell	Capacity 400mAh Voltage 3.7 V Chemistry Li-Ion Polymer Rechargeable Li-Ion Polymer Battery Charge time 4 hours On-Time use 80 minutes

Environment (temperature and humidity)

Characteristic	Specification

8705

PRODUCT BROCHURE

PHYSIO CONTROL

LIFEPAK® 15 MONITOR/DEFIBRILLATOR

For Emergency Medical Services

JUNE 14, 2019

SPECIFICATIONS

GENERAL

The LIFEPAK 15 monitor/defibrillator has six main operating modes:

AED Mode: for automated ECG analysis and a prompted treatment protocol for patients in cardiac arrest.

Manual Mode: for performing manual defibrillation, synchronized cardioversion, noninvasive pacing, and ECG and vital sign monitoring.

Archive Mode: for accessing stored patient information.

Setup Mode: for changing default settings of the operating functions.

Service Mode: for authorized personnel to perform diagnostic tests and calibrations.

Demo Mode: for simulated waveforms and trend graphs for demonstration purposes.

PHYSICAL CHARACTERISTICS

Weight:

Basic monitor/defibrillator with new roll paper and two batteries installed: 7.9 kg (17.5 lb)

Fully featured monitor/defibrillator with new roll paper and two batteries installed: 8.4 kg (18.5 lb)

Lithium-ion battery: ≤0.6kg (1.3lb)

Accessory Bags and Shoulder Strap: 1.77 kg (3.9 lb)

Standard (hard) Paddles: 0.95 kg (2.1 lb)

Height: 31.7 cm (12.5 in)

Width: 40.1 cm (15.8 in)

Depth: 23.1 cm (9.1 in)

DISPLAY

Size (active viewing area): 212 mm (8.4 in) diagonal; 171 mm (6.7 in) wide x 128 mm (5.0 in) high

Resolution: display type 640 dot x 480 dot color backlit LCD

User Selectable Display Mode: full color or SunVue™ display high contrast

Display: a minimum of 5 seconds of ECG and alphanumerics for values, device instructions, or prompts

Display: up to three waveforms

Waveform Display Sweep Speed: 25 mm/sec for ECG, SpO_2, IP, and 12.5 mm/sec for CO_2

DATA MANAGEMENT

The device captures and stores patient data, events (including waveforms and annotations), and continuous waveform and patient impedance records in internal memory.

The user can select and print reports, and transfer the stored information via supported communication methods.

Report Types:

- Three format types of CODE SUMMARY™ critical event record: short, medium, and long
- 12-lead ECG with STEMI statements
- Continuous Waveform (transfer only)
- Trend Summary
- Vital Sign Summary
- Snapshot

Memory Capacity: Total capacity is 360 minutes of continuous ECG, 90 minutes of continuous data from all channels, or 400 single waveform events.

Maximum memory capacity for a single patient includes up to 200 single waveform reports and 90 minutes of continuous ECG.

COMMUNICATIONS

The device is capable of transferring data records by wired or wireless connection. This device complies with Part 15 of the FCC rules, and its operation is subject to the following two conditions: (1) this device may not cause harmful interference, and (2) this device must accept any interference received, including interference that may cause undesired operation.

Serial Port RS232 communication + 12V available

Limited to devices drawing maximum 0.5 A current

Bluetooth® technology provides short-range wireless communication with other Bluetooth-enabled devices

MONITOR

ECG

ECG is monitored via several cable arrangements:

A 3-wire cable is used for 3-lead ECG monitoring.

A 5-wire cable is used for 7-lead ECG monitoring.

A 10-wire cable is used for 12-lead ECG acquisition. When the chest electrodes are removed, the 10-wire cable functions as a 4-wire cable.

Standard paddles or QUIK-COMBO pacing/defibrillation/ECG electrodes are used for paddles lead monitoring.

Frequency Response:

Monitor: 0.5 to 40 Hz or 1 to 30 Hz

Paddles: 2.5 to 30 Hz

12-lead ECG diagnostic: 0.05 to 150 Hz

Lead Selection:

Leads I, II, III, (3-wire ECG cable)

Leads I, II, III, AVR, AVL, and AVF acquired simultaneously (4-wire ECG cable)

Leads I, II, III, AVR, AVL, AVF, and C lead acquired simultaneously (5-wire ECG cable)

Leads I, II, III, AVR, AVL, AVF, V1,V2,V3,V4,V5, and V6 acquired simultaneously (10-wire ECG cable)

ECG size: 4, 3, 2.5, 2, 1.5, 1, 0.5, 0.25 cm/mV (fixed at 1 cm/mV for 12-lead)

Heart Rate Display:

20–300 bpm digital display

Accuracy: ±4% or ±3 bpm, whichever is greater

QRS Detection Range Duration: 40 to 120 msec

Amplitude: 0.5 to 5.0 m

Common Mode Rejection (CMRR): ECG Leads: 90 dB at 50/60 Hz

SpO_2/SpCO/SpMet

Sensors:

MASIMO® sensors including RAINBOW® sensors

NELLCOR® sensors when used with the MASIMO RED™ MNC adapter

SpO_2

Displayed Saturation Range: "<50" for levels below 50%; 50 to 100%

Saturation Accuracy: 70–100% (0–69% unspecified)

Adults/Pediatrics:
±2 digits (during no motion conditions)
±3 digits (during motion conditions)

Dynamic signal strength bar graph

Pulse tone as SpO_2 pulsations are detected

SpO_2 Update Averaging Rate User selectable: 4, 8, 12 or 16 seconds

SpO_2 Sensitivity User selectable: Normal, High

SpO_2 Measurement: Functional SpO_2 values are displayed and stored

Pulse Rate Range: 25 to 240 bpm

Pulse Rate Accuracy (Adults/Pediatrics):
±3 digits (during no motion conditions)
±5 digits (during motion conditions)

Optional SpO_2 waveform display with autogain control

SpCO®

SpCO Concentration Display Range: 0 to 40%

SpCO Accuracy: ±3 digits

SpMET®

SpMet Saturation Range: 0 to 15.0%

SpMet Display Resolution: 0.1% up to 10%

SpMet Accuracy: ±1 digit

NIBP

Blood Pressure Systolic Pressure Range: 30 to 255 mmHg

Diastolic Pressure Range: 15 to 220 mmHg

Mean Arterial Pressure Range: 20 to 235 mmHg

Units: mmHg

Blood Pressure Accuracy: ±5 mmHg

Blood Pressure Measurement Time: 20 seconds, typical (excluding cuff inflation time)

Pulse Rate Range: 30 to 240 pulses per minute

Pulse Rate Accuracy: ±2 pulses per minute or ±2%, whichever is greater

Operation Features Initial Cuff Pressure: User selectable, 80 to 180 mmHg

Automatic Measurement Time Interval: User selectable, from 2 min to 60 min

Automatic Cuff Deflation Excessive Pressure: If cuff pressure exceeds 290 mmHg

Excessive Time: If measurement time exceeds 120 seconds

CO_2

CO_2 Range: 0 to 99 mmHg (0 to 13.2 kPa)

Units: mmHg, %, or kPa

Respiration Rate Accuracy:
0 to 70 bpm: ±1 bpm
71 to 99 bpm: ±2 bpm

Respiration Rate Range: 0 to 99 breaths/minute

Rise Time: 190 msec

Response Time: 3.3 seconds (includes delay time and rise time)

Initialization Time: 30 seconds (typical), 10-180 seconds

Ambient Pressure: automatically compensated internally

Optional Display: CO_2 pressure waveform

Scale factors: Autoscale, 0–20 mmHg (0–4 Vol%), 0–50 mmHg (0–7 Vol%), 0–100 mmHg (0–14 Vol%)

Invasive Pressure

Transducer Type: Strain-gauge resistive bridge

Transducer Sensitivity: 5µV/V/mmHg

Excitation Voltage: 5 Vdc

Connector: Electro Shield: CXS 3102A 14S-6S

Bandwidth: Digital filtered, DC to 30 Hz (< -3db)

Zero Drift: 1 mmHg/hr without transducer drift

Zero Adjustment: ±150 mmHg including transducer offset

Numeric Accuracy: ±1 mmHg or 2% of reading, whichever is greater, plus transducer error

Pressure Range: -30 to 300 mmHg, in six user selectable ranges

Invasive Pressure Display

Display: IP waveform and numerics

Units: mmHg

Labels: P1 or P2, ART, PA, CVP, ICP, LAP (user selectable)

Temperature

Range: 24.8° to 45.2°C (76.6° to 113.4°F)

Resolution: 0.1°C

Accuracy: ±0.2°C including sensor

Reusable Temperature Cable: 5 foot or 10 foot

Disposable Sensor Types: Surface–Skin; Esophageal/Rectal

Trend

Time Scale: Auto, 30 minutes, 1, 2, 4, or 8 hours

Duration: Up to 8 hours

ST Segment: After initial 12-lead ECG analysis, automatically selects and trends ECG lead with the greatest ST displacement

Display Choice of: HR, PR (SpO_2), PR (NIBP), SpO_2 (%), SpCO (%), SpMet (%), CO_2 ($EtCO_2$/$FiCO_2$), RR (CO_2), NIBP, IP1, IP2, ST

ALARMS

Quick Set: Activates alarms for all active vital signs

VF/VT Alarm: Activates continuous (CPSS) monitoring in Manual mode

Apnea Alarm: Occurs when 30 seconds has elapsed since last detected respiration

Heart Rate Alarm Limit Range: Upper, 100–250 bpm; lower, 30–150 bpm

INTERPRETIVE ALGORITHM

12-Lead Interpretive Algorithm: University of Glasgow 12-Lead ECG Analysis Program, includes AMI and STEMI statements

PRINTER

Prints continuous strip of the displayed patient information and reports

Paper Size: 100 mm (3.9 in)

Print Speed: 25 mm/sec or 12.5 mm/sec

Optional: 50 mm/sec time base for 12-lead ECG reports

Delay: 8 seconds

Autoprint: Waveform events print automatically

Frequency Response:

Diagnostic: 0.05 to 150 Hz or 0.05 to 40 Hz

Monitor: 0.67 to 40 Hz or 1 to 30 Hz

DEFIBRILLATOR

Biphasic Waveform: Biphasic Truncated Exponential

The following specifications apply from 25 to 200 ohms, unless otherwise specified:

Energy Accuracy: ±1 joule or 10% of setting, whichever is greater, into 50 ohms, ±2 joules or 15% of setting, whichever is greater, into 25-175 ohms.

Voltage Compensation: Active when disposable therapy electrodes are attached. Energy output within ±5% or ±1 joule, whichever is greater, of 50 ohms value, limited to the available energy which results in the delivery of 360 joules into 50 ohms.

Paddle Options: QUIK-COMBO® pacing/defibrillation/ECG electrodes (standard). Cable Length 8 foot long (2.4 m) QUIK-COMBO cable (not including electrode assembly).

Standard paddles (optional)

Manual Mode

Energy Select: 2, 3, 4, 5, 6, 7, 8, 9, 10, 15, 20, 30, 50, 70, 100, 125, 150, 175, 200, 225, 250, 275, 300, 325, and 360 joules

Charge Time: Charge time to 360 joules in less than 10 seconds, typical

Synchronous Cardioversion: Energy transfer begins within 60 msec of the QRS peak

Paddles Leads OFF Sensing: When using QUIK-COMBO electrodes, the device indicates Paddles Leads OFF if the resistive part of the patient impedance is greater than 300 ±15% ohms, or if the magnitude of the patient impedance is greater than 440 ±15% ohms.

AED Mode

Shock Advisory System™ (SAS): an ECG analysis system that advises the operator if the algorithm detects a shockable or non-shockable ECG rhythm. SAS acquires ECG via therapy electrodes only.

Shock Ready Time: Using a fully charged battery at normal room temperature, the device is ready to shock within 20 seconds if the initial rhythm finding is "SHOCK ADVISED"

Biphasic Output: Energy Shock levels ranging from 150–360 joules with same or greater energy level for each successive shock

cprMAX™ Technology: In AED mode, cprMAX™ technology provides a method of maximizing the CPR time that a patient receives, with the overall goal of improving the rate of survival of patients treated with AEDs.

Setup Options:

- Auto Analyze: Allows for auto analysis. Options are OFF, AFTER 1ST SHOCK
- Initial CPR: Allows the user to be prompted for CPR for a period of time prior to other activity. Options are OFF, ANALYZE FIRST, CPR FIRST
- Initial CPR Time: Time interval for Initial CPR. Options are 15, 30, 45, 60, 90, 120, and 180 seconds.
- Pre-Shock CPR: Allows the user to be prompted for CPR while the device is charging. Options are OFF, 15, 30 seconds.
- Pulse Check: Allows the user to be prompted for a pulse check at various times. Options are ALWAYS, AFTER EVERY SECOND NSA, AFTER EVERY NSA, NEVER
- Stacked Shocks: Allows for CPR after 3 consecutive shocks or after a single shock. Options are OFF, ON
- CPR Time: 1 or 2 User selectable times for CPR. Options are 15, 30, 45, 60, 90, 120, 180 seconds and 30 minutes.

PACER

Pacing Mode: Demand or non-demand rate and current defaults

Pacing Rate: 40 to 170 PPM

Rate Accuracy: ±1.5% over entire range

Output Waveform: Monophasic, truncated exponential current pulse (20 ± 1 ms)

Output Current: 0 to 200 mA

Pause: Pacing pulse frequency reduced by a factor of 4 when activated

Refractory Period: 180 to 280 msec (function of rate)

ENVIRONMENTAL

Unit meets functional requirements during exposure to the following environments unless otherwise stated.

Operating Temperature: 0° to 45°C (32° to 113°F); -20°C (-4°F) for 1 hour after storage at room temperature; 60°C (140°F) for 1 hour after storage at room temperature

Storage Temperature: -20° to 65°C (-4° to 149°F) except therapy electrodes and batteries

Relative Humidity, Operating: 5 to 95%, non-condensing. NIBP: 15 to 95%, non-condensing

Relative Humidity, Storage: 10 to 95%, non-condensing

Atmospheric Pressure, Operating: -382 to 4,572 m (-1,253 to 15,000 ft). NIBP: -152 to 3,048 m (-500 to 10,000 ft)

Water Resistance, Operating: IP44 (dust and splash resistance) per IEC 529 and EN 1789 (without accessories except for 12-lead ECG cable, hard paddles, and battery pack)

Vibration: MIL-STD-810E Method 514.4, Propeller Aircraft - category 4 (figure 514.4-7 spectrum a), Helicopter - category 6 (3.75 Grms), Ground Mobile - category 8 (3.14 Grms), EN 1789: Sinusoidal Sweep, 1 octave/min, 10-150 Hz, ±0.15 mm/2 g

Shock (drop): 5 drops on each side from 18 inches onto a steel surface EN 1789: 30-inch drop onto each of 6 surfaces

Shock (functional): Meets IEC 60068-2-27 and MIL-STD-810E shock requirements 3 shocks per face at 40 g, 6 ms half-sine pulses

Bump: 1000 bumps at 15 g with pulse duration of 6 msec

Impact, Non-operating: EN 60601-1 0.5 + 0.05 joule impact UL 60601-1 6.78 Nm impact with 2-inch diameter steel ball. Meets IEC62262 protection level IK 04.

EMC: EN 60601-1-2:2006 Medical Equipment -General Requirements for Safety - Collateral Standard: Electromagnetic Compatibility - Requirements and Tests EN 60601-2-4:2003: (Clause 36) Particular Requirements for the Safety of Cardiac Defibrillators and Cardiac Defibrillator-Monitors

Cleaning: Cleaning 20 times with the following: Quaternary ammonium, isopropyl alcohol, hydrogen peroxide

Chemical Resistance: 60 hour exposure to specified chemicals: Betadine (10% Povidone-Iodine solution), Coffee, Cola, Dextrose (5% Glucose solution), Electrode Gel/Paste (98% water, 2% Carbopol 940), HCL (0.5% solution, pH=1), Isopropyl Alcohol, NaCl solution (0.9% solution), Cosmetic discoloration of the paddle well shorting bar shall be allowed following exposure to HCL (0.5% solution).

POWER

Power Adapters: AC or DC

Power Adapters provide operation and battery charging from external AC or DC power

- Full functionality with or without batteries when connected to external AC/DC
- Typical battery charge time while installed in LIFEPAK 15 device is 190 minutes
- Indicators: external power indicator, battery charging indicator

Dual battery: Capability with automatic switching

Low battery indication and message: Low battery fuel gauge indication and low battery message in status area for each battery

Replace battery indication and message: Replace battery fuel gauge indication, audio tones and replace battery message in the status area for each battery. When replace battery is indicated, device auto-switches to second battery. When both batteries reach replace battery condition, a voice prompt instructs user to replace battery.

Battery Capacity For two, new fully-charged batteries, 20°C (68°F)

Operating Mode		Monitoring (minutes)	Pacing (minutes)	Defibrillation (360J discharges)
Total Capacity to Shutdown	Typical	360	340	420
	Minimum	340	320	400
Capacity After Low Battery	Typical	21	20	30
	Minimum	12	10	6

BATTERY

Battery Specifications

Battery Type: Lithium-ion

Weight: ≤0.6kg (1.3lb)

Charge Time (with fully depleted battery): 4 hours and 15 minutes (typical)

Battery indicators: Each battery has a fuel gauge that indicates its approximate charge. A fuel gauge that shows two or fewer LEDs after a charge cycle indicates that the battery should be replaced.

Charging Temperature Range: 5° to 45°C (41° to 113°F)

Operating Temperature Range: 0° to 45°C (32° to 113°F)

Short Term (<1 week) Storage Temperature Range: -20° to 60°C (-4° to 140°F)

Long Term (>1 week) Storage Temperature Range: 20° to 25°C (68° to 77°F)

Operating and Storage Humidity Range: 5 to 95% relative humidity, non-condensing

8705

F6

Fetal & Maternal Monitor

Mounting Solutions

Trolley

Wall Mount

Specification

Physical Characteristics			Display Specifications	
Dimensions:	347mm x 330mm x 126mm	13.75"w x 13"d x5"h	Display:	10.1" color TFT-LCD
Weight:	Approx. 6 kg		Resolution:	RGB 800 (W) x480 (H)

Ultrasound		DECG	
Technique:	Ultrasound Pulse Doppler with autocorrelation	Technique:	Peak-peak detection technique
Pulse Repetition Rate:	2 KHz	DFHR Measurement Range:	30bpm ~ 240 bpm
Ultrasound Frequency:	(1.0±10%) MHz	Resolution:	1bpm
FHR Measurement Range:	50bpm ~ 240bpm	Accuracy:	±1 bpm
Resolution:	1bpm		
Accuracy:	±2 bpm		
/ob:	<10mW/cm^2		

TOCO		IUP	
TOCO Range:	0% ~ 100%	Pressure Range:	0 ~ 100mmHg
Non-linear Error:	≤ ±10%	Non-linear Error:	≤ ±3 mmHg
Resolution:	1%	Resolution:	1%
Zero Mode:	Automatic / Manual	Zero Mode:	Automatic/Manual

AFM		Recorder	
Technique:	Pulsed Doppler ultrasound	Recording Paper:	Z-fold, 150/152mm thermo-sensitive paper
Range:	0 ~ 100 (%)	Recording Speed:	1/2/3 cm/min, 25 mm/sec for history data
Resolution:	1%		

Power Supply	
Operating Voltage:	100 - 240V~
Operating Frequency:	50/60Hz
Battery:	14.8V/4400mAh rechargeable Li-ion battery

EDANUSA

4204 Jutland Drive,
Suite B, San Diego, CA 92117
Toll Free Phone Number:
888.850.4597

EDANUSA

www.edanusa.com

F6

Fetal & Maternal Monitor

Care for Health

F6

Fetal & Maternal Monitor

Foldable color TFT screen

F6 supports four viewing angles: 15°, 30°, 45°, 60°, that give better optic angles for care givers.

Quick setup and simplified workflow

Functional keys and knob provide various short-cuts to achieve functions for clinical use. The 'START' button could be configured to integrate patient info and printing. This could help the doctor to simplify the workflow and work with 1 button only.

Various printing options

F6 is compatible with 152 and 150 mm thermal printing paper in either American or International standard. The recording information includes patient info, FHR waveform, TOCO waveform, Fetal movement and so on.

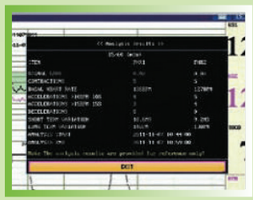

Built-in Antepartum CTG Analysis

The antepartum CTG analysis provides objective and numerical assessment of CTG for the caregivers' reference and ensures easy access to read FHR patterns.

User-friendly design

- 10.1 foldable TFT color screen
- Compact and portable design
- Probe rack for easy positioning of the transducers

Easy to Read & Operate

- Numeric and waveform display of FHR and TOCO
- Simplified workflow with various short-cuts
- Easy to use menu system ensures fast access to important functions

Advanced FHR Detection Technology

- 1 MHz waterproof sensitive transducer
- Signals Overlap Verification to differentiate twins FHR
- FHR signal quality indicator helps optimize the probe position

Powerful Data Management

- 60 hours built-in memory for seamless monitoring
- MFM-CNS network for remote monitoring
- Insight software for data management

8710

Lessons on Every Sound

Lesson are provided with every sound and accessed with a single keystroke. Lessons include discussion of the sound, schematic of the chest, phonocardiograms, questions and answers.

Thrills Palpated

Students palpate mumurs of Severe Aortic Stenosis and Ventricular Septal Defect to determine the grade of the murmur.

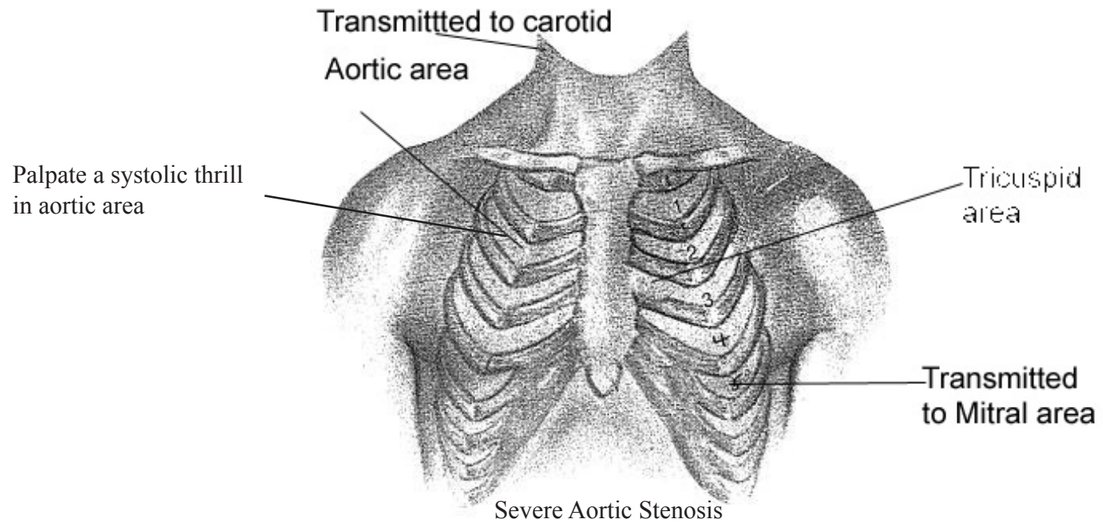

Severe Aortic Stenosis

Preprogrammed Lectures

Instructors preprogram their lectures for a smoother presentation. Instructors have multiple lectures that can be edited, saved and recalled at any time.

Optional Items

- SAM On-Line (for student practice)
- SimulScope Bedside Auscultation System (group instruction)
- Arterial Pulse Training System

Ordering Information

Cat. No.	Description
718-9007	SAM Student Auscultation Manikin®
717-9000	SAM On-Line
718-7003	SimulScope® Bedside Auscultation System
718-0015	Classroom Infrared Emitter
718-4006	Auditorium Infrared Sound System
718-7040	HeartMan® Infrared Headphones
718-7000	E-Scope® Electronic Stethoscope
718-2700	CardioSim® VII Digital Sound Simulator
718-6200	PneumoSim™ Digital Breath Sound Sim.
711-9300	Clinical Heart Disease by Proctor Harvey, M.D.

Cardionics, Inc.
910 Bay Star Blvd., Webster, Texas 77598 USA
Telephone: 281-488-5901 Toll free US & Canada 800-364-5901 email: Info@Cardionics.com
Web site: www.cardionics.com

Part no. 018-9007
Printed 08/10
JUNE 14, 2019

錫昌科技股份有限公司
KYS Technology
T 02-2911-5233
F 02-2911-6855
E info@kyst.com.tw

SAM II, the Student Auscultation Manikin

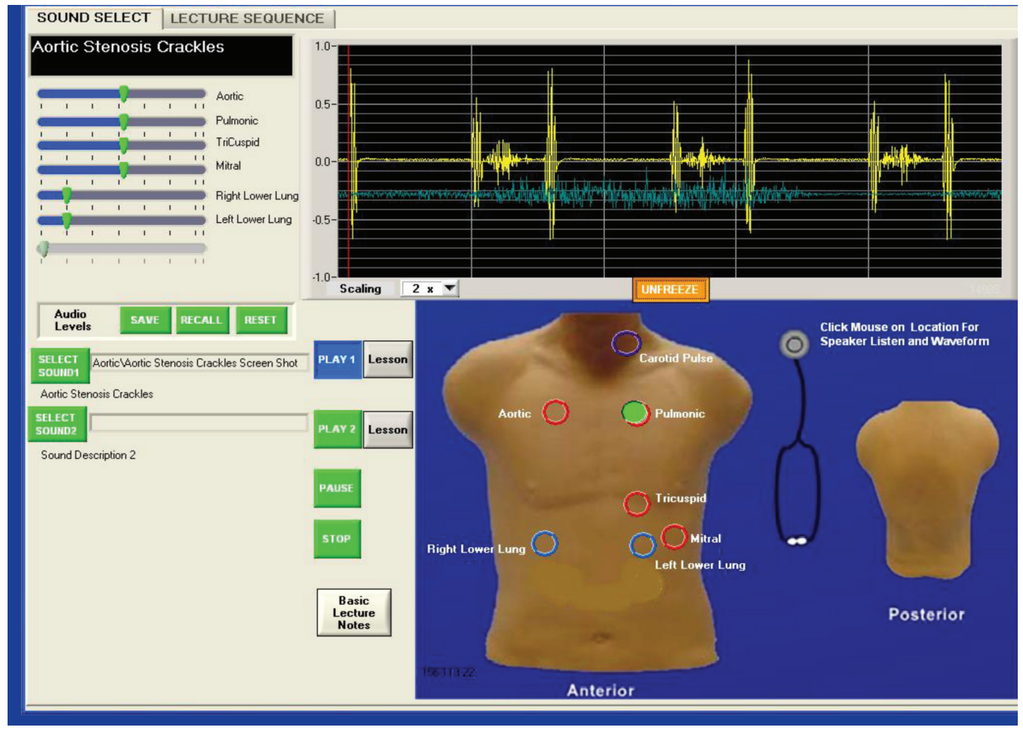

- **Sounds - 27 Heart, 21 Breath, 20 Bowel, 4 carotid bruits**
- **Listen with your own stethoscope at correct anatomical site**
- **Play Heart & Breath Sounds simultaneously or separately**
- **View phonocardiogram with every sound for easy identification of systolic and diastolic murmurs**
- **Instructors preprogram lectures for smoother presentation**
- **Test sounds included for assessment**
- **SAM On-Line available 24/7 for students of SAM customers**

Teach and Test Assessment Skills

Cardionics
Leaders in Auscultation

® SAM Student Auscultation Manikin, CardioSim, SimulScope, HeartMan, E-Scope & Cardionics are registered trademarks of Cardionics, Inc., Webster,Texas.
™ PneumoSim is a trademank of Cardionics, Inc. Webster, Texas 77598.

8710

SAM II, the Student Auscultation Manikin

Phonocardiogram Displayed with Heart Sounds

Phonocardiographic Display.

SAM II presents a phonocardiogram with every heart sound. Instructors project the phonocardiogarms for full audience viewing. When heart and breath sounds are heard simultaneously, two channels are displayed.

Listen to SAM with Your Own Stethoscope

SAM presents 27 heart sounds, 21 breath sounds, 20 bowel sounds, 4 carotid bruits and a carotid pulse timed with the onset of systole. Some heart sounds have breath sounds included. The sounds are located in the correct anatomical site. Heart sounds are located at the aortic, pulmonic, tricuspid and mitral areas. Breath sounds are upper and lower right and left chest and four posterior sites. Bowel sounds are in the upper right and left quadrants. There is one site for carotid bruits in the neck. Breath sounds can be diminished at the lower lung while maintaing normal volume at the upper chest to present a variety of clinical conditions. When listening to a split S_2 in the pulmonic area, breath sounds are heard simultaneously. Students learn that S_2 splits on inspiration and closes on expiration. Instructors maintain control over the volume at each listening site.

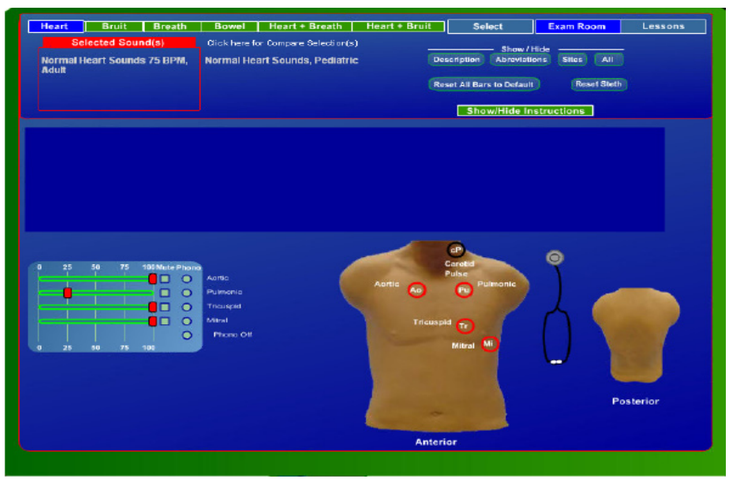

SAM On-Line

Students access SAM On-Line 24/7 from any PC connected to the Internet. Repetition assists students in learning, relearning or refreshing their auscultation skills. SAM On-Line has same sounds as SAM. Comparison of sounds is available and easy to access.

JUNE 14, 2019

The key to Patient Assessment

Class Teaching with the SimulScope

Group teaching in a classroom or auditorium is easily accomplished. Place the stethoscope on SAM with students and instructor wearing Wireless HeartMan Infrared Headphones. Everyone hears simultaneously with perfect clarity.

The instructor knows exactly what students are hearing. Group teaching can be performed with the SimulScope, Classroom Infrared Emitter, Auditorium Infrared Sound System Wireless E-Scope Electronics Stethoscope or the Cardionics Low-frequency Speaker System. The SimulScope or Classroom Infrared Emitter will accommodate groups of 25-30 while the Auditorium Infrared Sound System can handle from 1 to 500.

Identify Systole by Carotid Pulse Palpation

When assessing heart sounds, it is <u>essential</u> to differentiate systole from diastole. Because systole begins with the first heart sound (S_1), SAM has a carotid pulse timed with each first heart sound. Students palpate SAM's carotid pulse while listening to heart sounds.

KYS 錫昌科技 KYS Technology

8776
NOTE LOCATION OF
POWER 115V OUTLET

Welch Allyn

Green Series™ 777 Integrated Wall System

ENERGY STAR PARTNER

Welch Allyn®
Advancing Frontline Care™

Standardize across facilities for greater efficiency and consistent data capture or customize for your facility's needs.

	WALL BOARD	GS 777 WALL TRANSFORMER	COAXIAL OPHTHALMOSCOPES	PANOPTIC™ OPHTHALMOSCOPES		DIAGNOSTIC MACROVIEW™ OTOSCOPES		PNEUMATIC OTOSCOPE	KLEENSPEC® DISPENSERS		WALL ANEROID	CONNEX® PROBP™ DEVICE	SURETEMP® PLUS THERMOMETER
Part #		77710	11720	11810	11820	23810	23820	20200	52400-PF	52100-PF	7670-01	34XFWT-B	01690-300
GS 777 Integrated Wall Systems													
77798	●	●	●					●		●	●		
77791-1MPX	●	●		●		●			●		●		●
77791-2MPX	●	●			●	●			●		●		●
77791-MX	●	●	●			●			●		●		●
77792-1MP	●	●		●		●			●		●		
77792-2MP	●	●			●	●			●		●		
77792-M	●	●	●			●			●		●		
77795-2MPX	●	●			●		●		●		●		●
77795-MX	●	●	●				●		●		●		●
77796-M	●	●	●				●		●		●		
77797-2PX	●	●			●			●		●	●		●
77797-X	●	●	●					●		●	●		●
77791-MXNOBP	●	●	●			●			●				●
77792-MNOBP	●	●	●			●			●				
GS 777 Integrated Wall Systems with Connex® ProBP™ Digital Blood Pressure Device (includes wall mounting bracket and device)													
77791-MXPROBP	●	●	●			●			●			●	●
77791-2MPXPROBP	●	●			●	●			●			●	●
GS 777 Integrated Wall Systems with Spot Vital Signs® or Spot Vital Signs® LXi Devices (includes wall mounting bracket only, devices must be ordered separately)													
77794-MSPOT	●	●	●			●			●				
77794-MLXI	●	●	●			●			●				
77794-2MPSPOT	●	●			●	●			●				
77794-2MPLXI	●	●			●	●			●				
GS 777 Wall Transformer Sets													
77510		●							●				
77910		●							●		●		
77710-71M		●	●			●							
77710-81M		●		●		●							
77710-82M		●			●	●							
77710-TAKX		●							●		●		●

The United States Green Building Council's Leadership in Energy and Environmental Design (LEED) is an internationally-recognized green building certification system providing benchmarks for the design, construction and operation of high-performance green buildings.

Welch Allyn is proud to have earned a Gold rating in the LEED certification program.

To place an order, call our Customer Service Department at: 1.800.535.6663
or contact your local Welch Allyn representative.

© 2012 Welch Allyn SM4085 Rev A www.welchallyn.com

ENERGY STAR PARTNER

Welch Allyn®
Advancing Frontline Care™

	Ophthalmoscopes				Otoscopes			Handles			Desk Charger	8781	
Part Number	11810	11820	11720	13000	20200	23810	21111	71670*	71910*	72800/71249 Pocket	71140	Hard	Soft
71510-PSM		•			•						•		
71630											•		
71640											•		
71641-M			•			•					•		
71641-MS			•			•					•		
71811-MP	•					•					•		
71811-MPS	•					•					•		
71821-MP		•				•					•		
92850				•			•			•	•	•	
92851				•			•			•	•		•

* All desk sets come with two handles

8801
TYPICAL

MEDICATION ERROR PREVENTION SYSTEMS

SIGMA Spectrum Infusion System Committed to Helping Reduce Medication Errors

Medication administration errors are costly and can result in patient harm. To effectively protect the patient, smart infusion pump technology helps intercept the potential harm associated with errors in dose programming and calculations. The SIGMA Spectrum Infusion System incorporates **Dose Error Reduction Software** (DERS) plus additional, unique Generation 2 safety features that are designed to guide users toward safe practices and help to reduce pump programming errors.

Enhancing patient safety requires the commitment of everyone from clinicians to hospital administrators. To ensure medication error reduction is a top priority, clinicians need to establish best practices and use equipment that helps them meet their medication error reduction goals. The smart technology of the SIGMA Spectrum Infusion System can help accomplish these goals with:

- Multiple error prevention systems focused on enhancing patient safety
- Rapid, intuitive workflow that supports error prevention with consideration to the clinician's challenging environment and needs
- Expert support before, during, and after implementation

The SIGMA Spectrum's smart design brings multiple safety features directly into the hands of the people who play a critical role in creating a safer environment for patients.

8915

DETECTO STAND ON SCALES-MECHANICAL

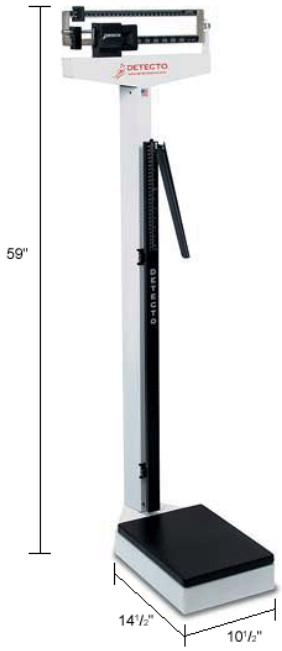

Detecto 439 Eye Level Beam Physician Scale with Height Rod, 400 lb x 4 oz

Detecto's model 439 features a height rod in inches and centimeters. The platform cover is easily removed for cleaning. The die-cast beam can be easily read from either side. Now available in 500 lb / 220 kg capacities by using the optional counterweights. Detecto continues to set the pace in the clinical scale industry, backed by over a century of leadership. Every Detecto physician scale features a time-honored reputation for rigid construction and precision engineering. This assures an unbeatably rugged product that guarantees accuracy and durability. All Detecto cales are tested with weights traceable to the U.S. Bureau of Standards. Detecto's model 439 features a height rod in inches and centimeters.Theplatformcover is easily removed for cleaning. The die-cast beam can be easily read from either side.

Product Specifications

- **BRAND**Detecto
- **LENGTH INCHES**10-1/2
- **WIDTH INCHES**14-1/2
- **HEIGHT INCHES**59
- **COLOR**White
- **CONSTRUCTION**Powder Coated Steel
- **PAN/PLATFORM SIZE**10-1/2 x 14-1/2
- **CAPACITY LBS**400
- **CAPACITY KG**--
- **READABILITY GRAMS**--
- **DESCRIPTION**Eye-Level Physician Scale
- **MANUFACTURERS PART NUMBER**439
- **HANDPOST**N
- **PLATFORM WIDTH INCHES**14-1/2
- **DUAL READABILITY**N
- **PLATFORM LENGTH INCHES**10-1/2
- **WHEELS**N
- **USED WITH**Height Rod, Wheels
- **WEIGHT LBS**38
- **HEIGHT ROD**Y
- **READABILITY OZ**4

SOURCE: https://www.globalindustrial.com/p/packaging/scales/Medical-Physician/eye-level-physician-scale-400-lb-x-4-oz-with-height-rod-10-1-2-inch-x-14-1-2-inch-platform?infoParam.campaignId=T9F&gclid=EAIaIQobChMIzL2Gqa3p4AIVmo7ICh1PrAi6EAQYAiABEgIJ5fD_BwE

JUNE 14, 2019

9240

STEP STOOL; KIK STEP FOR ANATOMY LAB AREAS

Kik-Step®

KEY FEATURES

SAFE, TWO-STEP DESIGN

14" overall height with non-skid tread to prevent slipping.

16” diameter at the base, 11 inch diameter at the top

SPRING MOUNTED CASTERS

Spring mounted casters roll smoothly and retract when weight is applied.

PROTECTIVE BUMPER

Wrap-around bumpers protect walls and furniture.

SOLID STEEL CONSTRUCTION

Supports up to 350lbs.

Available in silver, gray, black

SOURCE: https://www.staples.com/Cramer-Kik-Step-Stool-Silver/product_412801?akamai-feo=off

9241

FOOT STOOL SINGLE STEP

The steel-welded silver vein construction on this foot stool by Drive Medical is durable and attractive. The non-skid, ribbed rubber platform on this medical step stool provides stability, as do reinforced rubber tips on the legs. Medical Step Stool Surface: 14"W x 11"D. Medical Step Stool Height: 9"H. Overall Medical Step Stool Dimensions: 17"W x 13"D. This Medical Step Stool is protected with a limited lifetime warranty.

Product Specifications

- **BRAND**Drive Medical
- **MANUFACTURERS PART NUMBER**13030-1SV
- **WIDTH INCHES**14
- **DEPTH INCHES**11
- **HEIGHT INCHES**9
- **WEIGHT LBS.**5
- **COLOR**Silver Vein
- **CONSTRUCTION**Steel
- **DESCRIPTION**Step Stool without Handrail
- **WEIGHT CAPACITY**300 lbs
- **STEP SURFACE**14"W x 11"D
- **STEP HEIGHT**9"
- **HANDRAIL HEIGHT INCHES**--
- **TYPE**Step Stool
- **PACKAGE QUANTITY**1

SOURCE: https://www.globalindustrial.com/p/medical-lab/medical-equipment/patient-room/footstool-with-non-skid-rubber-platform?unbxdSuggestion=SUGGESTION%20-%20Drive%20Medical%20Step%20Stool%20-%20Non-Skid%20Rubber%20Footstool%20Platform%2013030-1SV&q=step%20stoo

9258

stryker

Performance-PRO™ XT

Manual Ambulance Cot

3800 E. Centre Avenue
Portage, MI 49002 USA
t: 269 329 2100
toll free: 800 327 0770

ems.stryker.com

Standard Features

- Color-coded controls
- High visibility powder-coated frame
- Lightest-in-class, all-aluminum X-frame
- Scientifically optimized lift bar & control design
- Lower lifting bar
- Lift-capable safety bar
- Integrated bumper system
- Perforated litter surface
- One-hand release, retractable head section
- One-hand release, fold-down siderails
- One-hand release, infinite positioning, pneumatically assisted backrest
- Oversized wheels with sealed caster and wheel bearings
- G-rated bolster mattress
- Shock or flat leg positioning
- G-rated patient restraints
- Single wheel lock
- Side release handle
- Built-in pull handle
- X-frame guards
- Power washable
- Load height adjustment

Optional Features

- Heavy duty two- or three-stage IV poles (patient right or left)
- Permanent or removable O2 bottle holders (head end, foot end or fowler)
- Defibrillator platform
- Dual wheel locks
- Pedi-Mate restraint package
- Equipment hook
- Backrest storage pouch
- Head end storage flat
- Base storage net
- Knee gatch
- Head extension
- Pillow
- Restraint extender
- Power-LOAD compatibility

Certifications CE

Specifications

Model Number	**6086**
Height[1]	
Position 1	13.8 in (35.1 cm)
Position 2	22 in (55.9 cm)
Position 3	25.8 in (66.5 cm)
Position 4	28.1 in (71.4 cm)
Position 5	31.9 in (81 cm)
Position 6	34.6 in (87.9 cm)
Position 7	37.3 in (94.7 cm)
Position 8	40 in (101.6 cm)
Position 9	42.2 in (107.2 cm)
Load Height Adjustment	
High	Deck heights 34 in (86 cm) and above
Mid	Deck heights between 30 – 34 in (76 – 86 cm)
Low	Deck heights below 30 in (76 cm)
Length	
Standard	80 in (203 cm)
Minimum	64 in (163 cm)
Width	23 in (58 cm)
Weight [2]	89 lb (40.37 kg)
Wheels	
Diameter	6 in (15 cm)
Width	2 in (5 cm)
Articulation	
Backrest 0 –73°	
Shock Position +15°	
Optional Knee Gatch 30°	
Maximum Weight Capacity	700 lb (318 kg)
Minimum Operator Required	
Occupied Cot	2
Unoccupied Cot	1
Recommended Fastener System	
Power-LOAD	Model 6390
Floor Mount	Model 6370 or 6377
Wall Mount	Model 6371
Recommended Loading Height[3]	Up to 34 in (86.4 cm)

Warranty

- One year parts and labor or two year parts only
- One-year soft goods
- Three-year X-frame components
- Lifetime on all welds*

Extended warranties available.

*7-year service life.

[1]Height measured from bottom of mattress, at seat section, to ground level.

[2]Cot is weighed without mattress and restraints.

[3]Load height can be set between 27.25 in and 34 in.

Stryker reserves the right to change specifications without notice. In-service video included with every order.

The Performance-PRO XT is designed to conform to the Federal Specification for the Star-of-Life Ambulance KKK-A-1822.

The Performance-PRO XT is designed to be compatible with competitive cot fastener systems.

The yellow and black color scheme is a registered trademark of Stryker Corporation

Meets dynamic crash standards with Performance-LOAD cot fastening system (SAE J3027 with X-restraints).

Stryker Corporation or its divisions or other corporate affiliated entities own, use or have applied for the following trademarks or service marks:**Performance Pro, Power-LOAD, Stryker,** . All other trademarks are trademarks of their respective owners or holder.

Mkt Lit-1457 18 JAN 2017 Rev A.1
Copyright © 2017 Stryker
JUNE 14, 2019
Printed in U.S.A.

9259

stryker

Power-PRO™ XT

Powered Ambulance Cot

3800 E. Centre Avenue
Portage, MI 49002 USA
t: 269 329 2100
toll free: 800 327 0770
ems.stryker.com

Standard Features

- Automatic in-cot fastener shut-off
- Manual back-up release handle
- Automatic high-speed retract
- Battery-powered hydraulic lift system
- Preventative maintenance hour meter
- Battery pack power level indicator
- Settable load height with jog function
- Color-coded controls
- High visibility powder-coated frame
- Lightweight, rugged aluminum construction
- Optimized lift bar and control design
- Lower lifting bar
- Lift-capable safety bar
- Integrated bumper system
- Retractable head section
- Floor-mounted safety hook
- One-hand release, fold down siderails
- One-hand release, infinite positioning, pneumatically assisted backrest
- Oversized wheels with sealed caster and wheel bearings
- Sealed bolster mattress
- Shock or flat leg positioning
- Two lap belts and one four-point shoulder restraint
- Built-in pull handle
- X-frame guards
- Power washable
- SMRT power system (12V DC, 120V AC and 240V AC options available)

Optional Features

- Heavy duty two- or three-stage IV poles (patient right or left)
- Permanent or removable O_2 bottle holders (head end, foot end or fowler)
- Sealed flat mattress
- Dual wheel locks
- Head extension
- Pillow
- Equipment hook
- Backrest storage pouch
- Head end storage flat
- Defibrillator platform
- Base storage net
- Knee gatch
- SMRT charger mounting bracket
- Power-LOAD™ compatibility

Specifications

Model Number	**6506**
Height[1] (infinite height positioning between lowest and highest position)	
Highest Position	41.5 in. (105 cm)
Lowest Position	14 in. (36 cm)
Length	
Standard	81 in. (206 cm)
Minimum	63 in. (160 cm)
Width	23 in. (58 cm)
Weight[2]	125 lb (57 kg)
Wheels	
Diameter	6 in. (15 cm)
Width	2 in. (5 cm)
Articulation	
Backrest	0–73°
Shock Position	+15°
Optional Knee Gatch	30°
Maximum Weight Capacity[3]	700 lb (318 kg)
Minimum Operator Required	
Occupied Cot	2
Unoccupied Cot	1
Recommended Fastener System	
Power-LOAD	Model 6390
Floor Mount	Model 6370 or 6377
Wall Mount	Model 6371
Recommended Loading Height[4]	Up to 36 in (91 cm)

Warranty

- Two-year parts, and labor
- Two year bumper to bumper
- One-year soft goods
- Three-year X-frame components
- Three-year limited powertrain
- Lifetime on all welds

Extended warranties available.

7-year service life.

[1] Height measured from bottom of mattress, at seat section, to ground level.

[2] Cot is weighed with one battery pack, without mattress and restraints.

[3] 700 lb weight capacity with an unassisted lift capacity of 500 lb (Cot loads over 300 lb (136 kg) may require additional assistance to meet the set cot load height).

[4] Can accommodate load decks up to 36 in. Load height can be set between 26 in and 36 in.

Stryker reserves the right to change specifications without notice.

In-service video included with every order.

The Power-PRO XT is designed to conform to the Federal Specification for the Star-of-Life Ambulance KKK-A-1822.

The Power-PRO XT is designed to be compatible with competitive cot fastener systems.

The yellow and black color sceme is a registered trademark of Stryker Corporation

Meets dynamic crash standards with Power-LOAD cot fastening system (AS/NZS-4535, BS EN-1789 with X-restraints and SAE J3027) and Performance-LOAD cot fastening system (SAE J3027 with X-restraints).

Stryker Corporation or its divisions or other corporate affiliated entities own, use or have applied for the following trademarks or service marks: **Power-LOAD, Power-PRO, Stryker,** . All other trademarks are trademarks of their respective owners or holder.

Certifications

IPX6 IEC-60601-1

SMRT™ Power

Printed in U.S.A.
Copyright © 2017 Stryker
Mkt Lit-1450 06 JAN 2017 Rev A.4

JUNE 14, 2019

9299

IV POLE 4 HOOK ON CASTERS

Lakeside® 5-Leg IV Stand With 4 Ram's Horn Hook

Designed for tight spots, this **space saving 16" diameter size delivers the stability you need**. Epoxy coated steel base. Easy-to-clean chrome plated top post assembly. 3" rubber wheel, ball bearing casters provide smooth movement. Twist knob for easy height adjustment. Adjustment Range: 54" - 90-1/2". Some assembly required.

OR

McKesson Brand

Features

- McKesson 5-Leg I.V. Stand
- 4-hook ram's horn.
- 5-leg, dual wheel nylon casters.
- Exclusive No Loss knob.
- Chrome-plated steel tubing.
- 25 inch cast aluminum base.
- Height Adjustment: 52-1/4 inch to 92-3/4 inch
- Load Capacity: 45 lbs.
- Some assembly required.
- Not Made with Natural Rubber Latex.
- Packaged: Each
- NOTE: Photo shown is the IV stand with 2 ram hooks versus 4.

SOURCES: https://www.globalindustrial.com/p/material-handling/service-carts/medical-stands/lakeside-5-leg-iv-stand

https://mms.mckesson.com/product/407332/McKesson-Brand-81-11360

JUNE 14, 2019

mayo stands

9301
9301a
9301b

foot-pedal operated

- Convenient foot-pedal operated lock adjusts height from 37" to 62½"
- All welded stainless steel construction
- Base designed to move under low clearance equipment with maximum stability
- 2" dual wheel swivel casters

P-1065-SS 9301a

- Removable extra large 20" x 25" stainless steel tray for easy cleaning
- 50 lbs. weight capacity evenly distributed

P-1066-SS

- Removable 16¼" x 21¼" stainless steel tray for easy cleaning
- 50 lbs. weight capacity evenly distributed

9301

P-1068-SS

- Removable 12⅝" x 19⅛" stainless steel tray for easy cleaning
- 50 lbs. weight capacity evenly distributed

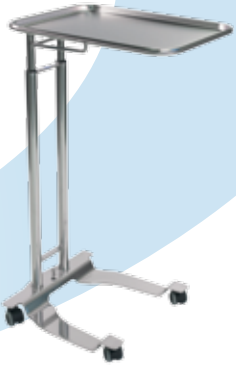

P-1069-SS

- Removable large 16¼" x 21¼" stainless steel tray for easy cleaning
- Four 2" dual wheel swivel casters for increased mobility
- 50 lbs. weight capacity evenly distributed

hand operated

- Adjust height from 37" to 61½" - friction lock
- Base designed to move under low clearance equipment with maximum stability
- All welded stainless steel construction
- 2" dual wheel swivel casters

P-1066-A-SS

- Removable 16¼" x 21¼" stainless steel tray for easy cleaning
- 50 lbs. weight capacity evenly distributed

P-1068-A-SS

- Removable 12⅝" x 19⅛" stainless steel tray for easy cleaning
- 50 lbs. weight capacity evenly distributed

P-1069-A-SS

- Removable large 16¼" x 21¼" stainless steel tray for easy cleaning
- 50 lbs. weight capacity evenly distributed

P-66

- Removable 19⅛"L x 12⅝"W stainless steel tray on powder-coated frame
- Adjusts height from 32" to 53"
- Two 2" double ball bearing casters
- 50 lbs. weight capacity evenly distributed

9301b

P-65 *Medical Tray Unit*

- Removable 19⅛"L x 12⅝"W stainless steel tray on chrome plated frame
- Two 2" double ball bearing casters
- 40 lbs. weight capacity evenly distributed

Printed using 100% Clean Wind Power

800.822.3501 • FAX 360.696.1700 • www.pedigo-usa.com

Proudly Made in the USA

4000 SE Columbia Way • Vancouver, Washington 98661

9304a

stryker

Tru-Fit®
Overbed Tables

Split-top with storage compartment
(available on split-top or single-top)

The sleek design of the award-winning Tru-Fit Overbed Table easily slides under beds, stretchers and mobile recliners. Available in several laminate and base colors, The Stryker single-top and split-top overbed tables coordinate with any room decor.

Single-top with vanity

Single-top without vanity

Split-top overbed table

Low-profile, U-shaped base provides maximum versatility.

Infinite adjustments between low and high heights

High-impact polystyrene cover protects the base and conceals the caster

Dura-edge™ protects the table and contains spills

Available with vanity compartment and acrylic mirror

Storage compartment option provides additional storage space

9304a

Tru-Fit
Overbed Tables

stryker

Single-top without vanity

Single-top with vanity

Split-top overbed table with vanity

Split-top with storage compartment

9304a

Standard features

- 1.46 inch (3.7 cm) diameter twin swivel casters
- Durable high-impact ploystyrene base cover
- Height adjustment to 43.75 inches (111 cm) (single-top only)
- Height adjustment to 45.5 inches (111 cm) (split-top only)
- Infinite adjustments between low and high heights
- Anodized aluminium column
- Tabletop with Dura-Edge
- Secondary laminate top (split-top only)
- Storage vanity with acrylic mirror

Optional features

- Choose from six standard laminates and four standard base/Dura-Edge colors
- Storage compartment

Specifications	Single-top without vanity	Single-top with vanity	Split-top with vanity
Part #	3150-000-100	3150-000-200	3150-000-300
Height			
High	43.75″ (111.1 cm)	43.75″ (111.1 cm)	45.5″ (115.6 cm)
Low	27″ (68.6 cm)	27″ (68.6 cm)	29″ (73.7 cm)
Weight capacity	75 lb. (34 kg)	75 lb. (34 kg)	75 lb. (34 kg)
Weight	43 lb. (20 kg)	50 lb. (23 kg)	61 lb. (28 kg)
Overall table top			
Length	31″ (79 cm)	31″ (79 cm)	31″ (79 cm)
Width	17.5″ (44.5 cm)	17.5″ (44.5 cm)	17.5″ (44.5 cm)
Base			
Height	2.2″ (5.6 cm)	2.2″ (5.6 cm)	2.2″ (5.6 cm)
Length	32″ (81 cm)	32″ (81 cm)	32″ (81 cm)
Width	21.25″ (54 cm)	21.25″ (54 cm)	21.25″ (54 cm)
Caster diameter	1.46″ (3.7 cm)	1.46″ (3.7 cm)	1.46″ (3.7 cm)

Storage compartment
Part number 3151-050-001

Weight capacity	40 lb. (18 kg)	40 lb. (18 kg)	40 lb. (18 kg)

Total unit with storage compartment

Weight	68 lb. (31 kg)	75 lb. (43 kg)	86 lb. (39 kg)
Length	42.75″ (109 cm)	42.75″ (109 cm)	42.75″ (109 cm)
Width	17.5″ (44.5 cm)	17.5″ (44.5 cm)	17.5″ (44.5 cm)

Warranty

One year parts and labor

Mkt lit-95-02022005 Rev G
Copyright © 2018 Stryker
Printed in U.S.A.

3800 E. Centre Avenue
Portage, MI 49002 USA
t: 269 329 2100
toll free: 800 327 0770
stryker.com

JUNE 14, 2019

*25 lb. safe working load
Furniture is manufactured exclusively for Stryker Medical.
Stryker reserves the right to change specifications without notice.

Stryker Corporation or its divisions or other corporate affiliated entities own, use or have applied for the following trademarks or service marks: Dura-Edge, Tru-Fit, Stryker. All other trademarks are trademarks of their respective owners or holder.

9312a

Ritter 224 & 225

S P E C I F I C A T I O N S

Ritter 224 and 225 Barrier-Free exam chairs are designed for properly positioning patients when necessary for lower-body examinations.

Ritter 224 Barrier-Free® Power Examination Chair

Features

The Ritter 224 has a gas-spring assisted back section with an easy access backrest mechanism while the Ritter 225 has a power back system. Both have adjustable low and high heights, built-in pillows, hideaway stirrups that lock in one of four lateral positions, foot extension shelves to expand the table length, paper roll holders hidden under the headrest, storage for one 21" x 3.5" diameter paper roll, polystyrene treatment pans, foot control, and leveling feet.

Specifications

Patient Weight Capacity:
500 lb (227 kg)

Height:
Uncompressed: 18" Low/37" High
(46 cm/94 cm)

Seamless Upholstery Dimensions:
28" W x 60" L
(71 cm/152 cm)

Length with Footrest Extended:
76" (193 cm)

Pelvic tilt: 5 1/5°

Heated Drawer: 24.6 watt

Heated Drawer Temperature:
92° F to 112° F at 115 VAC input voltage, 70° F ambient

Paper Roll Holder: Holds 24" x 3.56" dia. paper roll (61 cm x 9 cm)

Electrical Receptacle - Electrical Draw: 4 A

Hospital-grade, electrical receptacles on left and right sides

Table Weight: 409 lb (185 kg)

Shipping Weight: 465 lb (211 kg)

Electrical Ratings

224-001: 115 VAC, 50/60Hz, 9A

224-002: 115 VAC, 50/60Hz, 11.5A

224-003: 115 VAC, 50/60Hz, 11.5A

225-002: 115 VAC, 50/60Hz, 11.5A

225-003: 115 VAC, 50/60Hz, 11.5A

Accessories

Patient Support Rails Plus™

Patient Support Rails™

Assist Arms

Supply Assistant

Articulating Knee Crutches

Knee Crutches

Stainless Steel Treatment Pan

IQvitals® Table Mount

Standard Upholstery Colors

- Mist-813
- Stone-814
- Restful Path-858
- Iron Ore-851
- Lunar Gray-845
- Obsidian-857
- Oasis-843
- Soothing Blue-855
- Dream-847
- Mineral-844
- Healing Waters-848
- Shaded Garden-853
- Citrus-849
- Sandy Retreat-850
- Curative Copper-846
- Cranberry-859
- Dark Linen-856
- Latte-860
- Robust Brown-852
- Deep Earth-854

UltraFree* Colors

- UltraFree Stone-865
- UltraFree Restful Path-868
- UltraFree Obsidian-867
- UltraFree Harbor-861
- UltraFree Wheatgrass-862
- UltraFree Spice-863
- UltraFree Cranberry-869
- UltraFree Dark Linen-866
- UltraFree Latte-870
- UltraFree Branch-864

***Ultraleather® by Ultrafabrics**

CARB 93120.2 Phase 2 Compliant

Midmark is an ISO 13485 and ISO 9001 Certified Company.

Ritter 224/225 Comparison Chart

	18" Seat Height (Uncompressed)	500 lb Weight Capacity	Power Base	Standard Rail Accessory Receivers	Power Back	Clean Assist™ Roller System	Active Sensing Technology®	Drawer Heater & Pelvic Tilt	Tamper-Resistant Electrical Outlets
225-002	•	•	•	•	•		•	•	•
225-003	•	•	•	•	•	•	•	•	•
224-001	•	•	•	•					
224-002	•	•	•	•			•	•	•
224-003	•	•	•	•		•	•	•	•

For more information
or a demonstration, contact
your Midmark dealer or Midmark
Corporation, Dayton, OH.
Call: 1-800-MIDMARK
Fax: 1-800-365-8631
or visit midmark.com

Ritter® by MIDMARK

© Midmark Corporation 2018
Midmark Corporation, Dayton, OH.
Products subject to improvement changes without notice.
Litho in U.S.A. 007-10067-00 Rev. B1 (2/18)

Ready for use

Your Hill HA90E comes ready to plug into any 115 volts outlet.

Treated Vinyl Upholstery
Resists staining and abrasions

Adjustable Lift-Back
Controlled by Mechlok® raises to 80°

Stirrups
fold back under the seat when not in use

Protective Acrylic Base

Foot Piece
Raises and locks in horizontal position with sliding T-bar

Electric Foot Pedal
for height adjustment
(not shown)

Specifications

Table Rating
Lifts up to 400 lbs. Static Tested at 1000 lbs.

Height Range - 22"-35"

Standard Width - 26"

Length Reclined - 6'1"

Table Base Skirting
Acrylic thermo-plastic

Foam
Ultra-Cell® for comfort and shape retention

Shipping Weight
Approximately 250 lbs

Electric Requirements
115 v~, 60 Hz., 5 A (single motor), 10 A (2 motor), where specified - 230 v~, 50 Hz.

Note: Grounding reliability can only be achieved when the equipment is connected to an equivalent receptacle marked hospital only or hospital grade. There is no EMI concern related to the safe operation of this table.

Transportation and Storage Conditions

Ambient Temperature Range:
-30°C to +60°C (-22°F to 140°F)

Relative Humidity
0% to 90% (non-condensing)

Diagrams

90E Model Dimensions

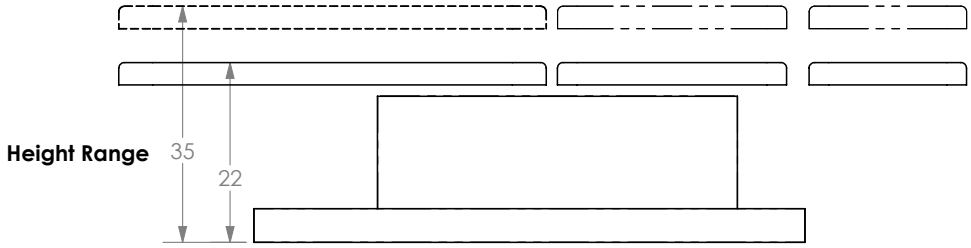

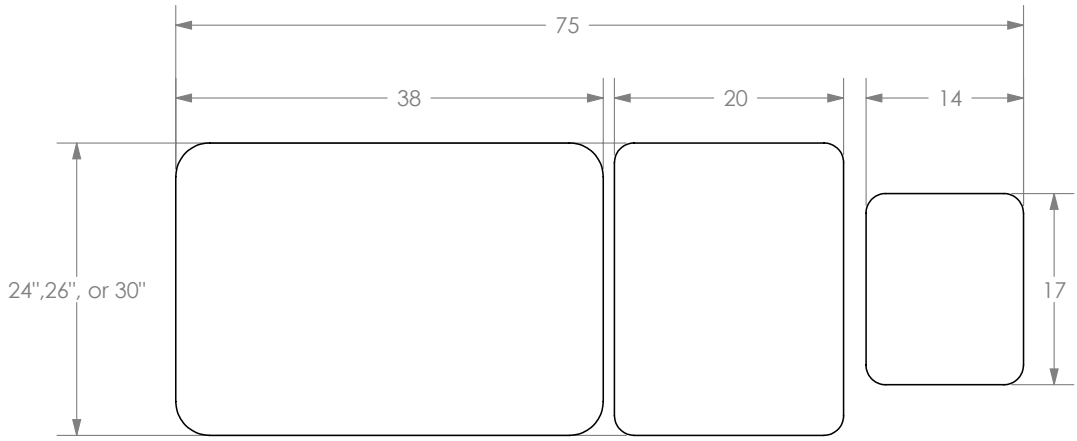

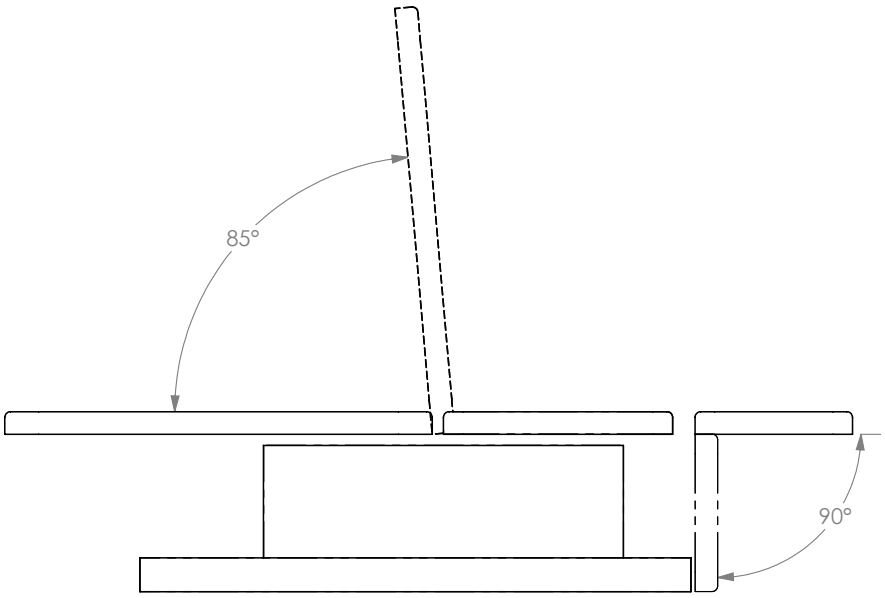

9316

OMM STUDENT TABLES

Assist 2 Section, Osteopathic tables, provide a strong and rigid surface. All models have a breathing hole and removable plug for prone treatments.

Specifications:

- Safe working load of 550 lbs.
- Generous dimensions of 77 in. long x 28 in. wide
- Expansive height range, from 17 in. to 37 in.
- Choice of A, B, or C head section
- Protective anti-trap design for a Osteopathic Tables
- Retractable wheel design and adjustable foot for stability on uneven surfaces

Preferred Model:

ST250B with standard foot pedal

SOURCE: http://www.assisttables.com/products/therapy-tables/osteopathic-table.php

9317

OMM ELECTRIC TABLE

Hill HA90 Treatment Exam Table
with Power Elevation and Optional 30 Wide Table Top

During manipulation, therapy, or mobilization, the HA90 makes your job easier by elevating to the perfect work height. You will appreciate the reduction in bending and back stress and your patients will appreciate easy access onto the table provided by the variable height. Gliding quietly and smoothly, the HA90 removes all barriers for your patients with smooth electric elevation from 20" to 33".

All mechanisms are completely enclosed to ensure safety for you and your patients. The standard HA90 has a 24" wide top with 1 1/2" foam. Various options such as Liftback, 27" and 30" widths, an extra foot pedal, special-density foam, face cut-out, and a choice of height ranges allow you to customize the HA90 to your specific needs.

Base HA90 Standard Features

- Electric Power Height from 20" to 33"
- Height controlled by foot pedal
- 400lb Lifting capacity (600lb available upon request)
- Higher starting heights also available
- Width 30", Length 6'3", Foam Top 1 1/2"
- Choice of 20 vinyl colors for the top
- Beige, Grey or Black thermo-plastic base cover withMicroban® Antimicrobial Protection
- One-year warranty on all parts (Dealer on-site labor warranty may vary)

SOURCE: http://www.hilllabs.com/physical-therapy/Hill-HA90-Table.php

9328

H BRACE TREATMENT TABLE 30” WIDTH

Options

- **00*** – Special Table Height
- **04*** – Table Safety Strap
- **05*** – Headrest, adj.
- **06*** – Backrest, adj., 350 lbs. weight cap
- **07*** – Nose Cutout
- **08*** – Drawer (N/A with Opt 69)
- **19*** – Slide Shelf, laminate
- **23** – Paper Dispenser
- **25** – Paper Cutter
- **27** – Paper Dispenser & Cutter Combo
- **32** – Pillow, full size
- **35** – Pillow, small
- **69*** – GasSpring Backrest
- **99L*** – Left Hand Table Model

*Factory Installed

Series 4002
Treatment Tables

- H-Brace is recessed into table leg with unique 4-sided “Lock-Tite” joint.
- High pressure laminate legs, apron and stretchers.
- 2” High-Density urethane foam top.
- Resist-All™ vinyl upholstery finish.
- Laminate: Natural Oak, Wild Cherry, or Folkstone Gray.
- Upholstery: Choice of (18) standard vinyl colors.

- **English**
- **Metric**

Weight Capacity: 400 lbs.

MODEL #	LENGTH	WIDTH	HEIGHT
4002-030	72"	30"	31"

SOURCE: http://www.hausmann.com/product_pages/m002_tt114/Model_4002.html

GE Healthcare

Panda Warmers

A warm welcome for your precious newborns

JUNE 14, 2019

9849

Technical Specifications

Mechanical

Panda Bedded Warmer

- Height: 193–218 cm
- Width: 64 cm
- Depth: 119 cm
- Weight: 100 kg
- Mattress Size: 66 x 48 x 2 cm
- Bed Capacity: 14 kg
- Bed Tilt: ± 12° continuous tilt
- Maximum patient weight: 40 kg (88 lbs)

Panda Freestanding Warmer

- Height: 195 cm
- Width: 85 cm
- Depth: 77 cm
- Weight: 43 kg

Panda Wall Mount Warmer

- Height: 69 cm
- Width: 40 cm
- Depth: 49 cm
- Weight: 15 kg

Accessories – Bedded Only

- Storage drawer package: 6.8 kg max load
- Instrument shelf: 3.6 kg max load

Operating Environment

- Temperature: 18°C to 30°C
- Humidity: 5% to 75% non-condensing relative humidity
- Pressure: 70–106 kPa
- Air Velocity: up to 0.3 m/sec
- Water Ingress: IPXO

Electrical Power Requirements

- 5.25 A @ 100v ~, 50/60 Hz
- 4.57 A @ 115v ~, 50/60 Hz
- 2.39 A @ 200v ~, 50/60 Hz
- 2.28 A @ 230v ~, 50/60 Hz
- 2.19 A @ 240v ~, 50/60 Hz

Integrated Resuscitation Characteristics

- Input pressure: 40-75 psi (275–517 kPa)
- Minimum Input Flow: 70 lpm
- Vacuum Range: 0–150 mmHg
- Vacuum Accuracy: ± 5% of full scale
- Flow Range: 0–15 lpm
- Air/O_2 Blender Range: 21–100% O_2
- Blender Accuracy: ± 5% O_2

Adjustable PIP (For T-Piece Resuscitation System only)

- Maximum PIP: 45 ± 5 cm H_2O
- PIP Override: > 30 ± 4 cm H_2O
- Flow Capacity: 15 lpm

Integrated SpO_2 Characteristics

Parameter	Masimo Rainbow SET®	Nellcor Oximax™
Measurement Range		
SpO_2	30–100%	1–100%
Pulse Rate	25–240 bpm	20–300 bpm
SpO_2 Accuracy		
From 70–100%	± 3 digits for neonates	± 3 digits for neonates
Below 69%	Unspecified	Unspecified
Pulse Rate Accuracy		
No Motion	± 3 bpm	± 3 bpm
Motion	± 5 bpm	N/A

System Performance

- Warmer expected: Approx. 8 years service life
- Heater Element: 360 Watts
- Patient temperature: ± 0.3°C @ 30°C measurement accuracy: to 42°C
- Observation Light: 2 dimmable 35W halogen bulbs: est. life 3000 hrs
- Procedure Light: Avg. 2000 lux (at nominal voltage); est. life 3000 hrs

User control settings

- Patient Control: 34–37.5°C in 0.1° temperature increments
- Radiant heat power: 0–100% in 5% increments

Irradiance

- Bedded Warmer 100% Heater Power: 31 mW/cm^2
- Non-Bedded Warmer (at Highest Mattress Height Position): 100% Heater Power: 31 mW/cm^2
- Heater Warmup Time at 100% Power: less than 3 minutes

Weight scale performance

- Functional range: 300 g to 8 kg
- Accuracy: ±10 g

Panda
warmer
Baby Temp (C)
Grams
Ounces
Heater Power
100%
Mode
Manual
Baby
Pulse Rate
SpO2
My weight is...
7 lbs 8 oz
Back
L/min
% O2
L/min