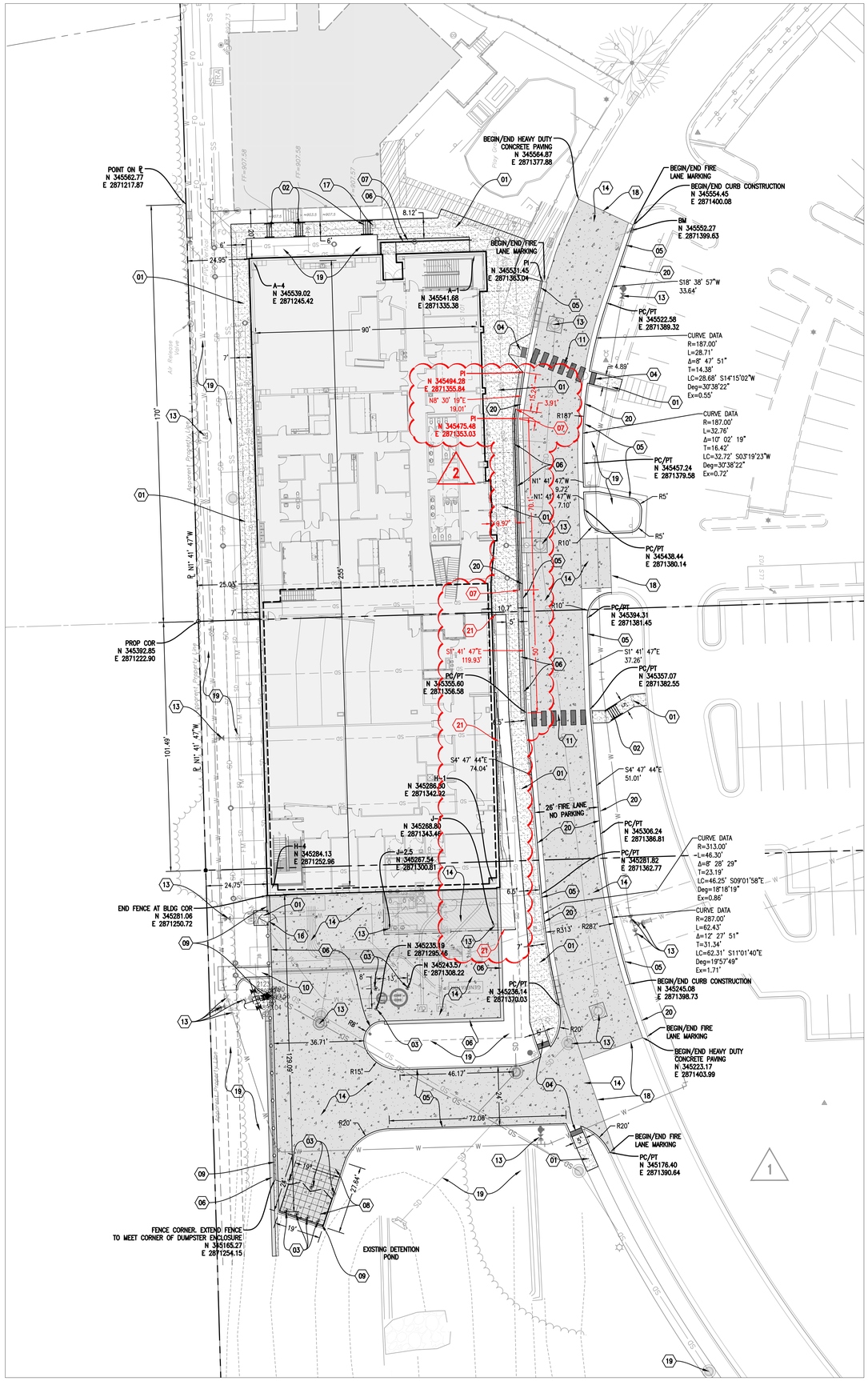

SITE PLAN KEYNOTES

NO.	DESCRIPTION
1	CONSTRUCT CONCRETE SIDEWALK PER DETAIL 02 – SIDEWALKS, SHEET C3-501 – SITE DETAILS.
2	CONSTRUCT CONCRETE STAIRS WITH HANDRAILS PER DETAIL 09 – EXTERIOR STAIRS AND HANDRAIL, SHEET C3-501 – SITE DETAILS.
3	CONSTRUCT BOLLARD PER DETAIL 06 – BOLLARD DETAIL, SHEET C3-501 – SITE DETAILS.
4	CONSTRUCT ADA COMPLIANT CURB RAMP WITH 2-FT WIDE TACTILE WARNING DOME STRIP.
5	CONSTRUCT 6-IN BARRIER CURB (NO 86-247). SEE DETAIL 03 – CURB AND GUTTER, SHEET C3-501 – SITE DETAILS.
6	CONSTRUCT CONCRETE RETAINING WALL. REFER TO STRUCTURAL DRAWINGS. SEE DTL A1, SHEET S6.01
7	SEE ARCHITECTURAL DRAWINGS FOR HAND RAIL DETAILS ALONG RETAINING WALL.
8	CONSTRUCT DUMPSTER PAD PAVING. SEE DETAIL 04 – DUMPSTER PAD PC CONCRETE PAVING, SHEET C3-501 – SITE DETAILS.
9	CONSTRUCT 8-FT TALL TREX SECLUSIONS FENCE. SEE DETAIL 01 – TREX SECLUSIONS FENCING, SHEET C3-504 – SITE FENCING DETAILS.
10	INSTALL CONCRETE FLUME. SEE DTL 07 – FLUMES SHEET C3-501 – SITE DETAILS.
11	INSTALL CROSSWALK STRIPING WITH 2-FT X 4-FT WHITE BARS EQUALLY SPACED 2-FT APART FROM EDGE TO EDGE.
12	CONSTRUCT DUMPSTER ENCLOSURE USING 8-FT TALL TREX SECLUSIONS FENCE. SEE DETAIL 01 – TREX SECLUSIONS FENCING, SHEET C3-504 – SITE FENCING DETAILS.
13	INSTALL CONCRETE COLLAR PER DETAIL 08 – MANHOLE VALVE CLEANOUT ISO. DTL, SHEET C3-501 – SITE DETAILS.
14	CONSTRUCT HEAVY DUTY CONCRETE PAVING PER DETAIL 01 – HEAVY DUTY PC CONCRETE PAVING, SHEET C3-501 – SITE DETAILS. PROVIDE JOINTS PER DETAILS AND NOTES ON SHEET C3-502 – CONCRETE JOINT DETAILS. SUBMIT JOINT LAYOUT PLAN FOR REVIEW AND APPROVAL PRIOR TO CONCRETE POUR.
15	KEYNOTE 15 IS NOT USED.
16	INSTALL SINGLE GATE.
17	ADJUST CLEAN-OUT TO GRADE
18	PROVIDE THICKENED CONCRETE EDGE PER DETAIL 05 – THICKENED CONCRETE EDGE, SHEET C3-501 – SITE DETAILS.
19	ALL DISTURBED AREAS SHALL BE REVEGETATED WITH BERMUDA GRASS SOD. PROVIDE ADEQUATE WATER, FERTILIZER, AND MOWING UNTIL ACCEPTABLE GROWTH IS ESTABLISHED, BUT NO LESS THAN 30 DAYS AFTER SUBSTANTIAL COMPLETION.
20 (1)	FIRE LANE STRIPING – PAINT THE TOP AND FACE OF THE CURB WITH RED PAVEMENT MARKING. ADD LABELS TO THE FACE OF RED PAINTED CURB USING 4-INCH HIGH WHITE LETTERS WITH A ¾ INCH STROKE STATING "FIRE LANE – NO PARKING". THE WORDS "FIRE LANE – NO PARKING" MUST BE GROUPED TOGETHER AS A PHASE. THE PHRASE SHALL BE PAINTED A MAXIMUM DISTANCE OF EVERY 40 FEET CENTER TO CENTER ALONG THE LENGTH OF THE FIRE LANE.
21 (2)	CONSTRUCT VALLEY GUTTER UNDER CURTAIN WALL. SEE DETAIL 10, SHEET C3-501.

SITE PLAN NOTES

1. IN DRIVEWAYS AND PARKING AREAS WHERE NEW CONCRETE PAVING IS TO ABUT EXISTING PAVING, A THICKENED EDGE IN THE CONCRETE SHALL BE PROVIDED. SEE THICKENED EDGE DETAIL.
2. UNLESS OTHERWISE DIRECTED, A MEDIUM BROOM FINISH SHALL BE PROVIDED ON ALL CONCRETE WALKS, RAMPS, STAIRS AND PAVED SURFACES.
3. COORDINATES ON THE BUILDING ARE SHOWN FOR GENERAL LOCATION ONLY. CONTRACTOR SHALL REFER TO THE ARCHITECTURAL AND STRUCTURAL PLANS FOR STRUCTURAL FOUNDATION LAYOUT. REFER TO ARCHITECTURAL PLANS AND SPECIFICATIONS FOR CONSTRUCTION INFORMATION AND DETAILS FOR BUILDING ERECTION.
4. A JOINT LAYOUT PLAN SHALL BE SUBMITTED FOR REVIEW WHEN CONCRETE PAVEMENT IS TO BE CONSTRUCTED.

HARDSCAPE / LANDSCAPE PATTERNS

- CONCRETE SIDEWALKS
- HEAVY DUTY CONCRETE PAVING
- REINFORCED HEAVY DUTY CONCRETE PAVING
- HEAVY DUTY ASPHALT PAVING

SCALE: 1" = 20'

UTILITY WARNING:
THE UNDERGROUND UTILITIES SHOWN HAVE BEEN LOCATED FROM RECORD DOCUMENTS OR FIELD LOCATIONS BY THE OPERATOR. THE SURVEYOR MAKES NO GUARANTEE THAT THE UNDERGROUND UTILITIES SHOWN COMPRISE ALL SUCH UTILITIES IN THE AREA EITHER IN SERVICE OR ABANDONED. THE SURVEYOR FURTHER DOES NOT WARRANT THAT THE UNDERGROUND UTILITIES SHOWN ARE IN THE EXACT LOCATION INDICATED ALTHOUGH THE SURVEYOR DOES CERTIFY THAT THEY ARE LOCATED AS ACCURATELY AS POSSIBLE FROM THE INFORMATION AVAILABLE. THE SURVEYOR HAS NOT PHYSICALLY LOCATED THE UNDERGROUND UTILITIES.

UTILITY ELEVATIONS AND SIZES MAY HAVE BEEN MEASURED UNDER ADVERSE FIELD CONDITIONS. UPON EXPOSING THE UTILITY, ELEVATIONS AND LINE SIZES SHOULD BE VERIFIED BY THE CONTRACTOR PRIOR TO CONSTRUCTION. CONTRACTOR SHOULD VERIFY CRITICAL ELEVATIONS USING THE BENCHMARK PROVIDED BY THE SURVEYOR OR ENGINEER. ANY DISCREPANCIES SHOULD BE IMMEDIATELY BROUGHT TO THE ENGINEER'S AND SURVEYOR'S ATTENTION.

BEFORE YOU DIG
CALL OKIE
(800) 522-6543

James R. Childers Architect, Inc.
45 South 4th Street
Fort Smith, AR 72901
479-783-2480
www.childersarchitect.com

PROFESSIONAL SEAL:
REGISTERED PROFESSIONAL ENGINEER
COREY W. LIPPS
21291
OKLAHOMA
3/11/20

Copyright © 2019 Cardinal Engineering
Unauthorized use prohibited

CONSULTANT LOGO:
CARDINAL ENGINEERING
An ENVIRONCLEAN Company
525 Central Park Drive
Suite 500
Oklahoma City, Oklahoma 73105
P: 405-842-1066 F: 405-843-4687
OKC | Norman | Tulsa | Woodward
www.cardinalengineers.com
CA # 7110, expiration date 06.30.2020

CLIENT:
THE CHEROKEE NATION
SEPT. 6, 1839

COLLEGE OF Osteopathic Medicine
AT THE CHEROKEE NATION
TAHLEQUAH, OK

KEY PLAN:

PROJECT PHASE:
CONSTRUCTION DOCUMENTS

REVISIONS		
#	DATE	DESCRIPTION
1	09/09/19	ADDENDUM 1
2	03/11/20	ASI 09

DATE: 08-23-19
JOB NUMBER: 17-13
SHEET NUMBER: C3-101
SITE PLAN

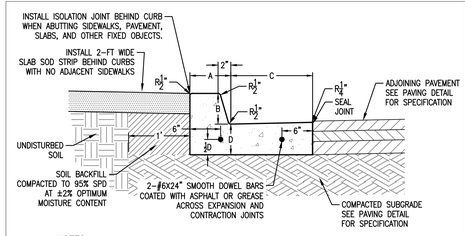

NOTES

1. CONCRETE CURB AND GUTTER SHALL BE CLASS A PC CONCRETE (3,500 PSI @ 28 DAYS AIR ENTRAINED).
2. WHEN PAVING ADJACENT TO GUTTER SLOPES AWAY FROM GUTTER, THE SLOPE OF THE GUTTER SHALL MATCH THE SLOPE OF THE ADJACENT PAVING. THE THICKNESS OF GUTTER ADJACENT TO THE PAVEMENT SHALL BE THE CORRESPONDING DIMENSION "D".
3. SET ½" EXPANSION JOINTS AT MAXIMUM 100' C/C SPACING USING ½"X4" PRE-MOLDED EXPANSION JOINT MATERIAL. SET CONTRACTION JOINTS AT 15' TO 20' C/C. FILL ALL JOINTS TO SURFACE WITH SILICONE SEALANT.
4. USE TYPE E TIED JOINT BETWEEN PC CONCRETE PAVEMENT AND GUTTER WHEN CURB AND GUTTER ARE POURED SEPARATELY FROM THE PAVING.

SPECIFIED CURB	C&G NUMBER (AB-CD)	CURB DIMENSIONS		GUTTER DIMENSIONS	
		A	B	C	D
		WIDTH (IN)	HEIGHT (IN)	WIDTH (IN)	THICKNESS (IN)
	86-166	8	6	16	6
	86-168	8	6	16	8
	86-226	8	6	22	6
	86-228	8	6	22	8
	86-246	8	6	24	6
X	86-247	8	6	24	7
	88-246	8	8	24	6
	88-248	8	8	24	8

03 CURB AND GUTTER
Scale: N.T.S.

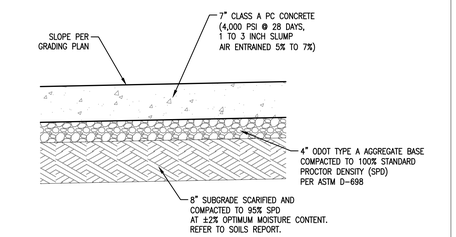

01 HEAVY DUTY PC CONCRETE PAVING
Scale: N.T.S.

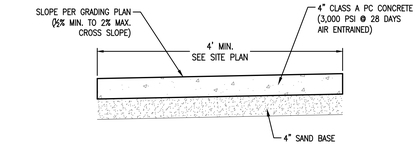

SET ½" EXPANSION JOINTS AT MAXIMUM 100 FT C/C SPACING USING ½"X4" PRE-MOLDED EXPANSION JOINT MATERIAL. SET CONTRACTION JOINTS SAW CUT TO A 1-1/2" DEPTH AT A SPACING EQUAL TO THE SIDEWALK WIDTH BUT NO GREATER THAN 7 FT. FILL ALL JOINTS TO SURFACE WITH SILICONE SEALANT. SET OR REMOVE PRE-MOLDED EXPANSION JOINT MATERIAL TO ½" BELOW SIDEWALK SURFACE PRIOR TO SEALING. USE ½"X4" PRE-MOLDED EXPANSION JOINT MATERIAL ALONG SIDEWALKS ADJOINING CURBS.

02 SIDEWALKS
Scale: N.T.S.

NOTES:

1. BOLLARDS AND ASSOCIATED BOLLARD PIER TO BE INSTALLED PER MANUFACTURER'S REQUIREMENTS AND RECOMMENDATIONS. HEIGHT ABOVE FINISHED GRADE TO BE 36-IN.

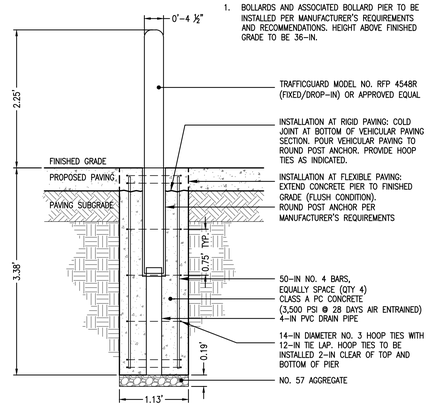

06 BOLLARD DETAIL
Scale: N.T.S.

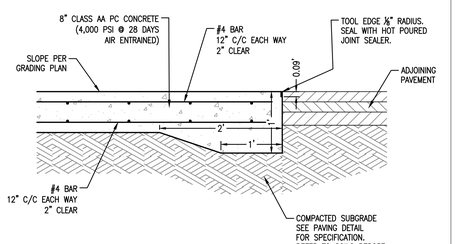

04 DUMPSTER PAD PC CONCRETE PAVING
Scale: N.T.S.

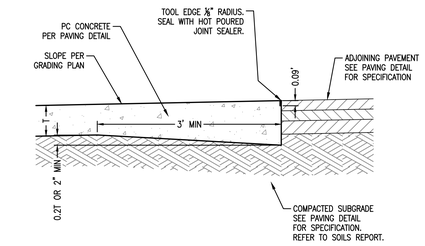

05 THICKENED CONCRETE EDGE
Scale: N.T.S.

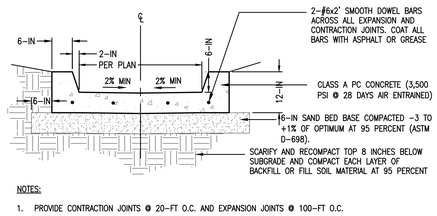

NOTES:

1. PROVIDE CONTRACTION JOINTS @ 20-FT O.C. AND EXPANSION JOINTS @ 100-FT O.C.
2. INSTALL A MINIMUM WIDTH OF 24-IN SOLID SLAB SOD ON EITHER SIDE OF CURB FLUME.
3. CONTRACTOR SHALL REMOVE ALL SILT AND SEDIMENT FROM FLUME PRIOR TO FINAL INSPECTION AND ACCEPTANCE BY OWNER.

07 FLUMES
Scale: N.T.S.

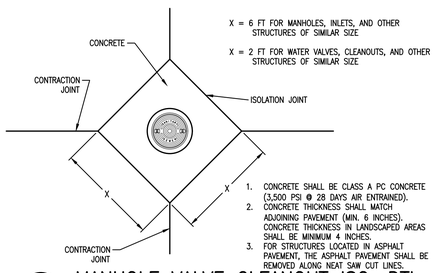

1. CONCRETE SHALL BE CLASS A PC CONCRETE (3,500 PSI @ 28 DAYS AIR ENTRAINED).
2. CONCRETE THICKNESS SHALL MATCH ADJOINING PAVEMENT (MIN. 6 INCHES). CONCRETE THICKNESS IN LANDSCAPED AREAS SHALL BE MINIMUM 4 INCHES.
3. FOR STRUCTURES LOCATED IN ASPHALT PAVEMENT, THE ASPHALT PAVEMENT SHALL BE REMOVED ALONG NEAT SAW CUT LINES.

08 MANHOLE VALVE CLEANOUT ISO. DTL
Scale: N.T.S.

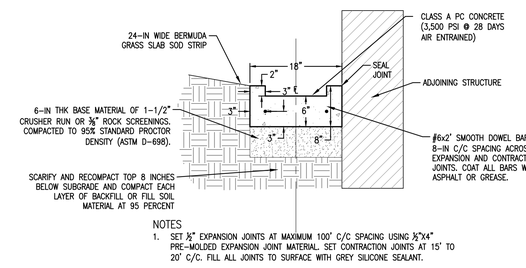

NOTES

1. SET ½" EXPANSION JOINTS AT MAXIMUM 100' C/C SPACING USING ½"X4" PRE-MOLDED EXPANSION JOINT MATERIAL. SET CONTRACTION JOINTS AT 15' TO 20' C/C. FILL ALL JOINTS TO SURFACE WITH GREY SILICONE SEALANT.

10 VALLEY GUTTER AT CURTAIN WALL
Scale: N.T.S.

NOTES:

1. FLIGHTS OF STAIRS SHOULD BE SHORT (MAX 20 STEPS PER FLIGHT BEFORE A LANDING IS REQUIRED).
2. AVOID FEWER THAN 2 STEPS PER FLIGHT.
3. STEPS IN FLIGHT MUST HAVE UNIFORM TREAD RUNS AND UNIFORM RISER HEIGHTS WITH TOLERANCE OF ±⅜".
4. TREADS SHALL BE 11"MIN, 12"MAX. RISERS SHALL BE 5"MIN, 7"MAX.
5. LANDINGS BETWEEN FLIGHTS OF STEPS MUST HAVE SAME WIDTH AS STEPS AND A MIN LENGTH OF 4'-0".
6. FLIGHTS OF 4 OR MORE STEPS SHALL HAVE HANDRAILS ON BOTH SIDES
7. FLIGHTS OF 4 OR MORE STEPS WIDER THAN 60 INCHES SHALL HAVE A CENTER HANDRAIL IN ADDITION TO EACH SIDE.
8. HANDRAILS SHALL BE CONTINUOUS ACROSS LANDINGS BETWEEN FLIGHTS OF STEPS.
9. HANDRAILS SHALL BE 1.5" OR 1.9" O.D. TYPE 304 OR 316L POLISHED STAINLESS STEEL OR POWDER COATED STEEL (COLOR TO BE BLACK UNLESS INDICATED BY ARCHITECT/ENGINEER).
10. PIPE MATERIAL SHALL BE ASTM A53.
11. REINFORCING STEEL SHALL BE ASTM A615 GR 60.
12. ALL CONCRETE SHALL HAVE A 28-DAY COMPRESSIVE STRENGTH OF 3,500-PSI MINIMUM AND SHALL MEET THE REQUIREMENTS OF SECTION 03300 OF THE PROJECT SPECIFICATIONS.
13. SEE GRADING PLAN (C8 SERIES) FOR ACTUAL NUMBER OF STAIR RISERS/TREADS.

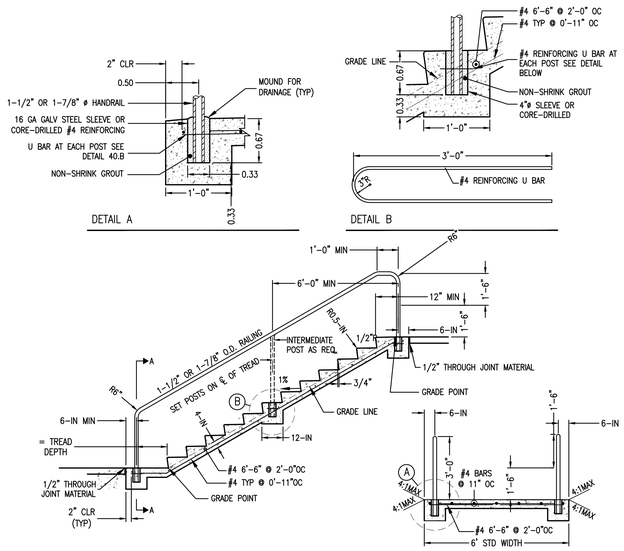

09 EXTERIOR STAIRS AND HANDRAIL
Scale: N.T.S.

James R. Childers Architect, Inc.
45 South 4th Street
Fort Smith, AR 72901
479-783-2480
www.childersarchitect.com

PROFESSIONAL SEAL:

REGISTERED PROFESSIONAL ARCHITECT COREY W. LIPPS 21291 OKLAHOMA
3/11/20

Copyright © 2019 Cardinal Engineering
Copyright © 2019 James R. Childers Architect

CONSULTANT LOGO:

CARDINAL ENGINEERING
An ENVIRONCLEAN Company
525 Central Park Drive
Suite 500
Oklahoma City, Oklahoma 73105
P: 405-842-1066 F: 405-843-4687
OKC | Norman | Tulsa | Woodward
www.cardinalengineers.com
CA # 7110, expiration date 06.30.2020

CLIENT:

THE CHEROKEE NATION ESTD. A.D. 1839

COLLEGE OF Osteopathic Medicine AT THE CHEROKEE NATION
TAHLEQUAH, OK

KEY PLAN:

PROJECT PHASE:
CONSTRUCTION DOCUMENTS

REVISIONS		
#	DATE	DESCRIPTION
1	03/17/20	ASI 05

DATE:	JOB NUMBER:
08-23-19	17-13

SHEET NUMBER:
C3-501

SITE DETAILS

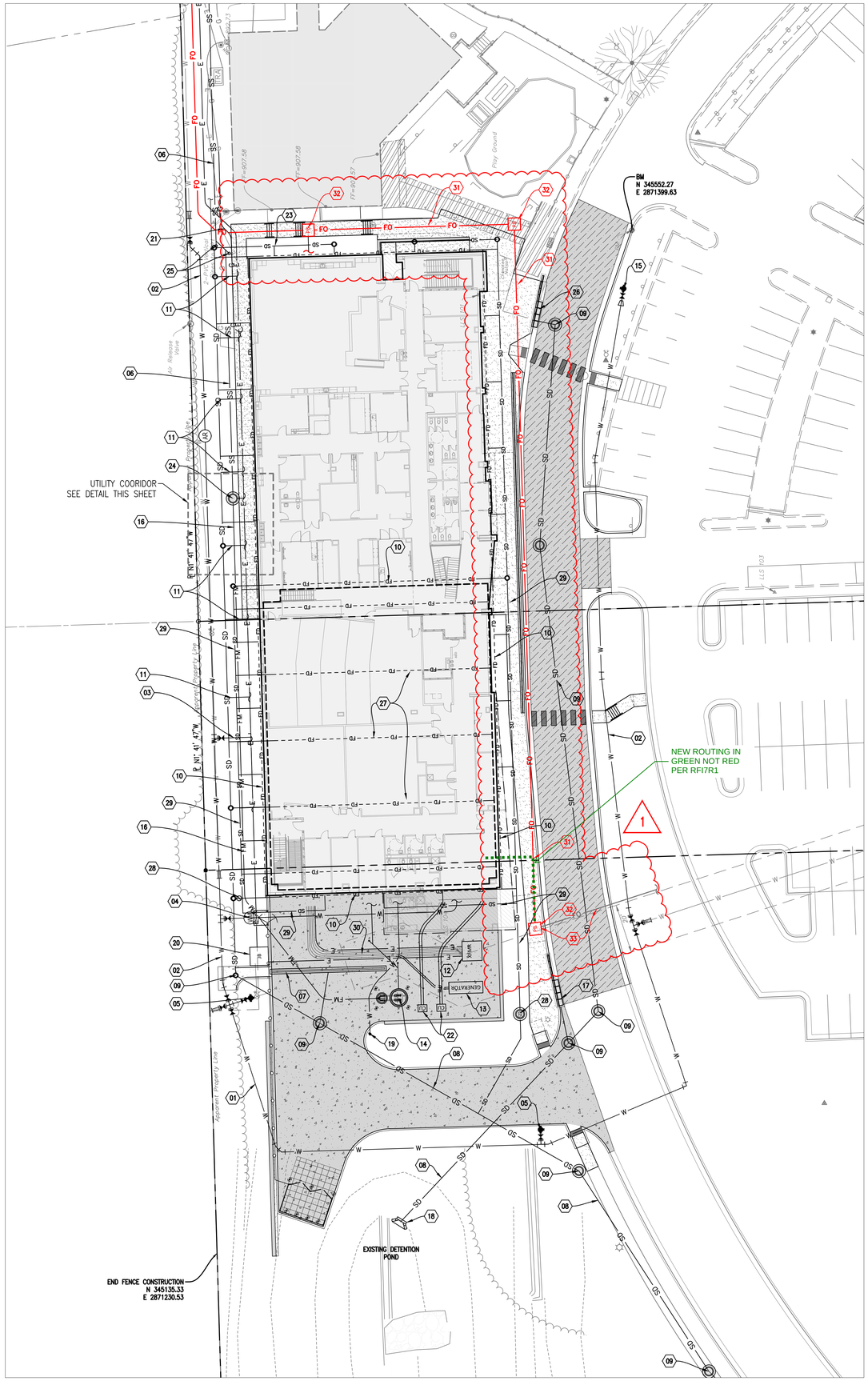

UTILITY PLAN KEYNOTES

NO.	DESCRIPTION
01	CONSTRUCT RELOCATION OF 12-IN WATER LINE PER TPWA STANDARDS AND SPECIFICATIONS. SEE SHEET C7-201.
02	CONSTRUCT RELOCATION OF 8-IN WATER LINE PER TPWA STANDARDS AND SPECIFICATIONS. SEE SHEETS C7-201.
03	INSTALL 8-IN FIRE LINE TO FIRE RISER ROOM. SEE SHEETS C7-203.
04	INSTALL 3-IN WATER SERVICE LINE AND METER PER TPWA STANDARDS AND SPECIFICATIONS.
05	INSTALL FIRE HYDRANT. SEE SHEET C7-201.
06	INSTALL 6-IN SEWER SERVICE LINE. SEE SHEET C8-201.
07	INSTALL TRENCH DRAIN. SEE SHEETS C6-201 TO C6-203.
08	INSTALL HP STORM DRAIN PIPE. SEE SHEETS C6-201 TO C6-203.
09	INSTALL STORM DRAIN MANHOLE. SEE SHEETS C6-201 TO C6-203.
10	INSTALL 4-IN FOUNDATION DRAIN PIPE AROUND BASEMENT. SEE SHEET C6-204.
11	INSTALL HP STORM DRAIN PIPE FOR ROOF DRAINS. SEE SHEET C6-201.
12	PROPOSED TRANSFORMER LOCATION.
13	PROPOSED GENERATOR LOCATION.
14	PROPOSED LIFT STATION FOR BASEMENT SEWER.
15	INSTALL FIRE HYDRANT. SEE SHEET C7-202.
16	INSTALL BASEMENT SEWER FORCE MAIN. SEE SHEET C8-201.
17	INSTALL CAST IRON CURB AND GRATE INLET. SEE SHEET C6-501.
18	INSTALL CONCRETE HEADWALL. SEE SHEET C6-503.
19	INSTALL YARD WATER HYDRANT. SEE MEP FOR BUILDING CONNECTION.
20	ELECTRICAL SERVICE PULL-BOX.
21	INSTALL GAS LINE. REFER TO MEP FOR SIZE AND CONNECTION.
22	MORTECH CONDESNING UNITS. SEE PLUMBING PLANS AND MANUFACTURER DRAWINGS.
23	INSTALL FIBER OPTIC LINE TO BUILDING. REFER TO MEP FOR CONNECTION.
24	INSTALL SANITARY SEWER MANHOLE.
25	INSTALL SANITARY SEWER CLEANOUTS.
26	INSTALL STORM SEWER CURB INLET.
27	UNDERSLAB PERFORATED PIPE FOUNDATION DRAINS.
28	INSTALL 6-IN BACKWATER VALVE FOR FOUNDATION DRAINS.
29	6-IN DRAIN PIPE FOR FOUNDATION AND UNDERSLAB DRAINS.
30	SEE ELECTRICAL DRAWINGS FOR DUCT BANK TO BUILDING.
31	INSTALL (2) 4-IN COMMUNICATION CONDUITS PER CHEROKEE NATION HEALTH IT SPECIFICATIONS FOR FIBER OPTIC SERVICE.
32	INSTALL 30-IN x 48-IN x 36-IN QUAZITE PULLBOX FOR FIBER OPTIC SERVICE. B14304836A BOX WITH C12304803Y COVER. RIM AND COVER OF BOXES WITHIN SIDEWALKS SHALL BE SET FLUSH WITH FINISHED GRADE OF SIDEWALK.
33	THE PRECISE LOCATION OF EXISTING FIBER OPTIC CONDUITS FROM THE OUTPATIENT HEALTH CLINIC IS NOT KNOWN. LOCATE EXISTING CONDUITS CROSSING THE SIDEWALK AND SET QUAZITE PULL BOX TO ROUTE FIBER OPTIC CONDUITS ALONG THE EAST SIDE OF THE NEW FACILITY.

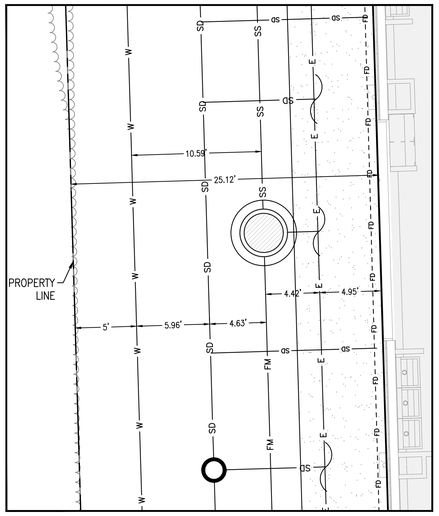

01 UTILITY CORRIDOR

SCALE: 1" = 5'

UTILITY LEGEND

- EXISTING WATER LINE
- EXISTING SANITARY SEWER LINE
- EXISTING GAS LINE
- EXISTING OVERHEAD ELECTRIC LINE
- PROPOSED GAS LINE
- PROPOSED WATER LINE
- PROPOSED SANITARY SEWER LINE
- PROPOSED OVERHEAD ELECTRIC LINE
- PROPOSED UNDERGROUND ELECTRIC LINE
- PROPOSED FIBER OPTIC LINE
- PROPOSED TELEPHONE LINE
- PROPOSED STORM SEWER
- PROPOSED SANITARY SEWER FORCE MAIN
- PROPOSED PERFORATED DRAIN PIPE

HARDSCAPE / LANDSCAPE PATTERNS

- CONCRETE SIDEWALKS
- HEAVY DUTY CONCRETE PAVING
- REINFORCED HEAVY DUTY CONCRETE PAVING
- HEAVY DUTY ASPHALT PAVING

0' 20' 40' 80'

SCALE: 1" = 20'

UTILITY WARNING:
THE UNDERGROUND UTILITIES SHOWN HAVE BEEN LOCATED FROM RECORD DOCUMENTS OR FIELD LOCATIONS BY THE OPERATOR. THE SURVEYOR MAKES NO GUARANTEE THAT THE UNDERGROUND UTILITIES SHOWN COMPRISE ALL SUCH UTILITIES IN THE AREA EITHER IN SERVICE OR ABANDONED. THE SURVEYOR FURTHER DOES NOT WARRANT THAT THE UNDERGROUND UTILITIES SHOWN ARE IN THE EXACT LOCATION INDICATED ALTHOUGH THE SURVEYOR DOES CERTIFY THAT THEY ARE LOCATED AS ACCURATELY AS POSSIBLE FROM THE INFORMATION AVAILABLE. THE SURVEYOR HAS NOT PHYSICALLY LOCATED THE UNDERGROUND UTILITIES.

UTILITY ELEVATIONS AND SIZES MAY HAVE BEEN MEASURED UNDER ADVERSE FIELD CONDITIONS. UPON EXPOSING THE UTILITY, ELEVATIONS AND LINE SIZES SHOULD BE VERIFIED BY THE CONTRACTOR PRIOR TO CONSTRUCTION. CONTRACTOR SHOULD VERIFY CRITICAL ELEVATIONS USING THE BENCHMARK PROVIDED BY THE SURVEYOR OR ENGINEER. ANY DISCREPANCIES SHOULD BE IMMEDIATELY BROUGHT TO THE ENGINEER'S AND SURVEYOR'S ATTENTION.

BEFORE YOU DIG
CALL OKIE
(800) 522-6543

James R. Childers Architect, Inc.
45 South 4th Street
Fort Smith, AR 72901
479-783-2480
www.childersarchitect.com

PROFESSIONAL SEAL:
REGISTERED PROFESSIONAL ENGINEER
COREY W. LIPPS
21291
OKLAHOMA
6/20/19

Copyright © 2019 Cardinal Engineering
Unauthorized Reuse Prohibited

CONSULTANT LOGO:
CARDINAL ENGINEERING
An ENVIRO-CLEAN Company
525 Central Park Drive
Suite 500
Oklahoma City, Oklahoma 73105
P: 405-842-1066 F: 405-843-4687
OKC | Norman | Tulsa | Woodward
www.cardinalengineers.com
CA# 7110, expiration date 06.30.2020

CLIENT:
THE CHEROKEE NATION
ESTD. 6.1839

College of Osteopathic Medicine
AT THE CHEROKEE NATION
TAHLEQUAH, OK

KEY PLAN:

PROJECT PHASE:
BID PACKAGE 04

REVISIONS		
#	DATE	DESCRIPTION
1	6/20/19	BP 04 RFI 007

DATE:	JOB NUMBER:
05-10-19	17-13

SHEET NUMBER:
C4-101

UTILITY PLAN

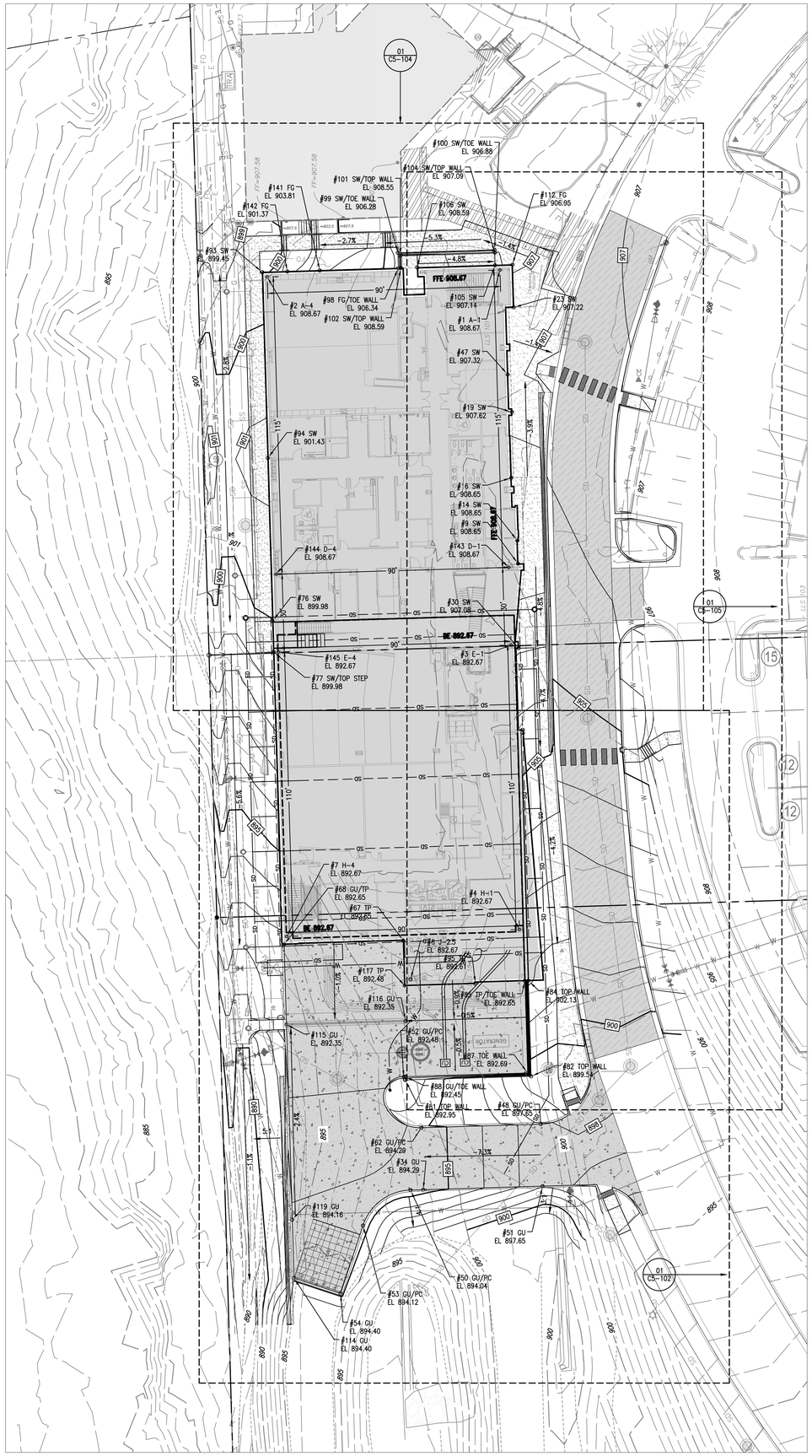

Point Table				
Point #	Elevation	Northing	Easting	Description
1	908.67	345541.68	2871335.38	A-1
2	908.67	345539.02	2871245.42	A-4
3	892.67	345396.75	2871339.67	E-1
4	892.67	345286.80	2871342.92	H-1
6	892.67	345267.54	2871300.81	J-2.5
7	892.67	345284.13	2871252.96	H-4
9	908.65	345428.17	2871342.37	SW
14	908.65	345437.09	2871342.11	SW
16	908.65	345461.36	2871339.76	SW
19	907.62	345486.80	2871339.99	SW
23	907.22	345527.25	2871340.72	SW
30	907.08	345395.50	2871342.61	SW
34	894.29	345186.20	2871305.72	GU
47	907.32	345501.28	2871338.40	SW
48	897.65	345211.56	2871351.16	GU/PC
50	894.04	345186.05	2871300.83	GU/PC
51	897.65	345187.57	2871351.87	GU
52	892.48	345229.95	2871298.14	GU/PC
53	894.12	345172.34	2871282.43	GU/PC
54	894.40	345146.10	2871273.75	GU
62	894.29	345210.19	2871305.01	GU/PC
67	892.65	345282.55	2871297.98	TP
68	892.65	345281.02	2871251.89	GU/TP
76	899.98	345406.02	2871247.47	SW
77	899.98	345394.03	2871247.82	SW/TOP STEP
81	892.95	345228.62	2871298.77	TOP WALL
82	899.54	345230.06	2871347.44	TOP WALL
84	902.13	345266.99	2871346.35	TOP WALL
85	892.65	345266.95	2871345.01	TP/TOE WALL
87	892.69	345231.35	2871346.07	TOE WALL
88	892.45	345229.95	2871298.73	GU/TOE WALL
93	899.45	345540.85	2871243.48	SW
94	901.43	345468.99	2871245.60	SW
95	892.61	345265.90	2871325.87	TP
98	906.34	345542.41	2871296.06	FG/TOE WALL
99	906.28	345548.35	2871295.88	SW/TOE WALL
100	906.88	345549.46	2871333.31	SW/TOE WALL
101	908.55	345547.38	2871296.91	SW/TOP WALL
102	908.59	345542.44	2871297.06	SW/TOP WALL
104	907.09	345548.46	2871333.34	SW/TOP WALL
105	907.14	345543.55	2871333.49	SW
106	908.59	345542.65	2871303.42	SW
112	906.95	345543.74	2871340.23	FG
114	894.40	345152.07	2871255.71	GU
115	892.35	345250.10	2871252.81	GU
116	892.35	345251.47	2871298.90	GU
117	892.48	345265.09	2871298.50	TP
119	894.16	345174.61	2871255.04	GU
141	903.81	345541.51	2871265.70	FG
142	901.37	345541.13	2871253.16	FG
143	908.67	345426.73	2871338.78	D-1
144	908.67	345424.07	2871248.82	D-4
145	892.67	345394.08	2871249.71	E-4

HARDSCAPE / LANDSCAPE PATTERNS

- CONCRETE SIDEWALKS
- HEAVY DUTY CONCRETE PAVING
- REINFORCED HEAVY DUTY CONCRETE PAVING
- HEAVY DUTY ASPHALT PAVING

POINT CODE ABBREVIATIONS

EG	EXISTING GRADE
FG	FINISHED GRADE
GRATE	TOP OF GRATE
GUT	GUTTER
MP	MID POINT
PC	POINT OF CURVATURE
SW	SIDEWALK
TC	TOP OF CURB
TP	TOP OF PAVING
TOE WALL	FINISHED GRADE AT TOE OF WALL
TOP WALL	FINISHED GRADE AT TOP OF WALL

0' 20' 40' 80'

SCALE: 1" = 20'

UTILITY WARNING:
THE UNDERGROUND UTILITIES SHOWN HAVE BEEN LOCATED FROM RECORD DOCUMENTS OR FIELD LOCATIONS BY THE OPERATOR. THE SURVEYOR MAKES NO GUARANTEE THAT THE UNDERGROUND UTILITIES SHOWN COMPRISE ALL SUCH UTILITIES IN THE AREA EITHER IN SERVICE OR ABANDONED. THE SURVEYOR FURTHER DOES NOT WARRANT THAT THE UNDERGROUND UTILITIES SHOWN ARE IN THE EXACT LOCATION INDICATED ALTHOUGH THE SURVEYOR DOES CERTIFY THAT THEY ARE LOCATED AS ACCURATELY AS POSSIBLE FROM THE INFORMATION AVAILABLE. THE SURVEYOR HAS NOT PHYSICALLY LOCATED THE UNDERGROUND UTILITIES.

UTILITY ELEVATIONS AND SIZES MAY HAVE BEEN MEASURED UNDER ADVERSE FIELD CONDITIONS. UPON EXPOSING THE UTILITY, ELEVATIONS AND LINE SIZES SHOULD BE VERIFIED BY THE CONTRACTOR PRIOR TO CONSTRUCTION. CONTRACTOR SHOULD VERIFY CRITICAL ELEVATIONS USING THE BENCHMARK PROVIDED BY THE SURVEYOR OR ENGINEER. ANY DISCREPANCIES SHOULD BE IMMEDIATELY BROUGHT TO THE ENGINEER'S AND SURVEYOR'S ATTENTION.

BEFORE YOU DIG
CALL OKIE
(800) 522-6543

James R. Childers Architect, Inc.
45 South 4th Street
Fort Smith, AR 72901
479-783-2480
www.childersarchitect.com

PROFESSIONAL SEAL:
REGISTERED PROFESSIONAL ENGINEER
COREY W. LIPPS
21291
5/21/19

Copyright © 2019 Cardinal Engineering
Unauthorized Use Prohibited

CONSULTANT LOGO:
CARDINAL ENGINEERING
An ENVIRONCLEAN Company
525 Central Park Drive
Suite 500
Oklahoma City, Oklahoma 73105
P: 405-842-1066 F: 405-843-4687
OKC | Norman | Tulsa | Woodward
www.cardinalengineers.com
CA# 7110, expiration date 06.30.2020

CLIENT:
THE CHEROKEE NATION
ESTD. DEPT. OF INTERIOR MAR. 6, 1839

College of Osteopathic Medicine
AT THE CHEROKEE NATION
TAHLEQUAH, OK

KEY PLAN:

PROJECT PHASE:
BID PACKAGE 02

REVISIONS			
#	DATE	DESCRIPTION	
1	04/16/19		ASI 01
2	05/24/19		BID PACKAGE 02 ASI 02

DATE: 02-08-19
JOB NUMBER: 17-13
SHEET NUMBER: C5-101

GRADING PLAN

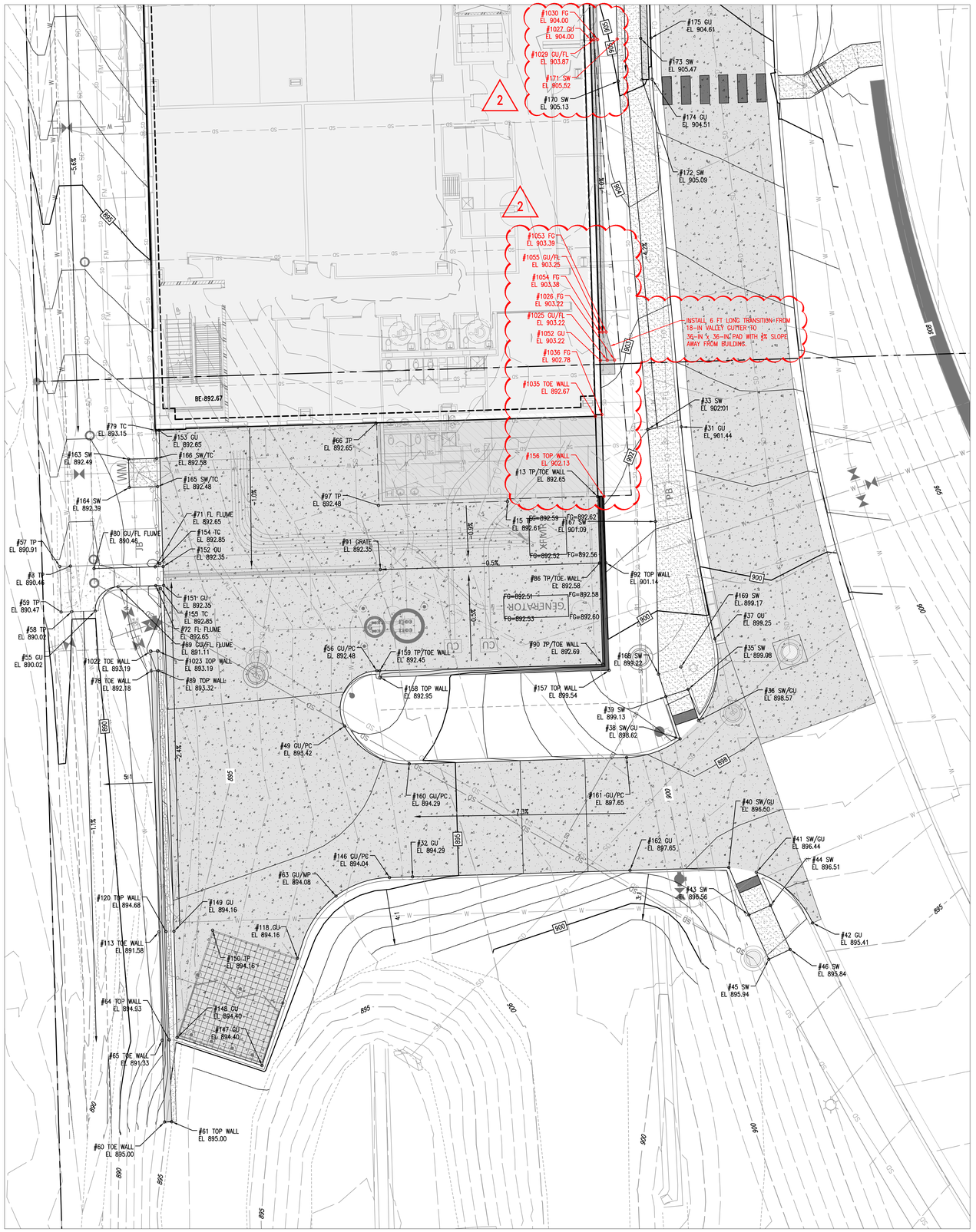

01 SOUTH AREA
Scale: N.T.S.

N

0' 10' 20' 40'
SCALE: 1" = 10'

Point Table

Point #	Elevation	Northing	Easting	Description
8	890.46	345252.18	2871233.07	TP
13	892.65	345266.95	2871345.01	TP/TOE WALL
15	892.61	345265.90	2871325.87	TP
31	901.44	345281.75	2871362.78	GU
32	894.29	345186.20	2871305.72	GU
33	902.01	345281.23	2871355.63	SW
35	899.08	345226.03	2871364.23	SW
36	898.57	345219.39	2871366.45	SW/GU
37	899.25	345236.73	2871369.89	GU
38	898.62	345215.50	2871362.50	SW/GU
39	899.13	345224.47	2871359.47	SW
40	896.50	345188.19	2871372.85	SW/GU
41	896.44	345187.15	2871378.69	SW/GU
42	895.41	345176.40	2871390.64	GU
43	896.56	345178.11	2871377.12	SW
44	896.51	345180.10	2871381.70	SW
45	895.94	345168.68	2871381.34	SW
46	895.84	345170.76	2871385.88	SW
49	893.42	345218.23	2871291.28	GU/PC
55	890.02	345242.67	2871238.35	GU
56	892.48	345229.95	2871298.14	GU/PC
57	890.91	345252.12	2871230.82	TP
58	890.02	345242.52	2871233.35	TP
59	890.47	345242.45	2871231.11	TP
60	895.00	345134.14	2871253.07	TOE WALL
61	895.00	345134.18	2871254.57	TOP WALL
63	894.08	345182.10	2871289.47	GU/MP
64	894.93	345151.55	2871254.06	TOP WALL
65	891.33	345151.51	2871252.56	TOE WALL
66	892.65	345282.55	2871297.98	TP
69	891.11	345247.81	2871243.20	GU/FL FLUME
71	892.65	345252.05	2871251.08	FL FLUME
72	892.65	345248.05	2871251.20	FL FLUME
78	892.18	345229.94	2871250.24	TOE WALL
79	893.15	345281.00	2871251.22	TC
80	890.46	345251.67	2871238.09	GU/FL FLUME
86	892.58	345252.84	2871345.43	TP/TOE WALL
89	893.32	345229.98	2871251.73	TOP WALL
90	892.69	345231.35	2871346.07	TP/TOE WALL
91	892.35	345251.47	2871298.90	GRATE
92	901.14	345252.88	2871346.76	TOP WALL
97	892.48	345265.09	2871298.50	TP
113	891.58	345174.52	2871251.88	TOE WALL
118	894.16	345168.89	2871281.29	GU
120	894.68	345174.56	2871253.38	TOP WALL
146	894.04	345186.05	2871300.83	GU/PC
147	894.40	345146.10	2871273.75	GU
148	894.40	345152.07	2871255.71	GU
149	894.16	345174.61	2871255.04	GU
150	894.16	345174.86	2871263.25	TP
151	892.35	345248.10	2871252.86	GU
152	892.35	345252.10	2871252.75	GU
153	892.65	345281.02	2871251.89	GU
154	892.85	345252.75	2871252.06	TC
155	892.85	345247.41	2871252.22	TC
156	902.13	345266.99	2871346.35	TOP WALL
157	899.54	345230.06	2871347.44	TOP WALL
158	892.95	345228.62	2871298.77	TOP WALL
159	892.45	345229.95	2871298.73	TP/TOE WALL
160	894.29	345210.19	2871305.01	GU/PC

1

Point Table

Point #	Elevation	Northing	Easting	Description
161	897.65	345211.56	2871351.16	GU/PC
162	897.65	345187.57	2871351.87	GU
163	892.49	345274.90	2871245.40	SW
164	892.39	345268.91	2871245.58	SW
165	892.48	345269.08	2871251.58	SW/TC
166	892.58	345275.08	2871251.40	SW/TC
167	901.09	345261.66	2871357.27	SW
168	899.22	345229.23	2871357.94	SW
169	899.17	345230.79	2871362.69	SW
170	905.13	345355.19	2871349.42	SW
171	905.52	345364.14	2871349.16	SW
172	905.09	345355.47	2871354.42	SW
173	905.47	345364.29	2871354.16	SW
174	904.51	345355.60	2871356.58	GU
175	904.61	345364.35	2871356.32	GU
1025	903.22	345295.92	2871347.04	GU/FL
1026	903.22	345295.97	2871348.60	FG
1027	904.00	345363.97	2871343.56	GU
1029	903.87	345363.99	2871344.22	GU/FL
1030	904.00	345364.02	2871344.97	FG
1035	892.67	345284.01	2871344.51	TOE WALL
1036	902.78	345284.38	2871345.91	FG
1052	903.22	345295.88	2871345.57	GU
1053	903.39	345301.92	2871346.81	FG
1054	903.38	345301.88	2871345.40	FG
1055	903.25	345301.90	2871346.06	GU/FL

1
2
2
2

HARDSCAPE / LANDSCAPE PATTERNS

- CONCRETE SIDEWALKS
- HEAVY DUTY CONCRETE PAVING
- REINFORCED HEAVY DUTY CONCRETE PAVING
- HEAVY DUTY ASPHALT PAVING

POINT CODE ABBREVIATIONS

EG	EXISTING GRADE
FG	FINISHED GRADE
GRATE	TOP OF GRATE
GUT	GUTTER
MP	MID POINT
PC	POINT OF CURVATURE
SW	SIDEWALK
TC	TOP OF CURB
TP	TOP OF PAVING
TOE WALL	FINISHED GRADE AT TOE OF WALL
TOP WALL	FINISHED GRADE AT TOP OF WALL

UTILITY WARNING:
THE UNDERGROUND UTILITIES SHOWN HAVE BEEN LOCATED FROM RECORD DOCUMENTS OR FIELD LOCATIONS BY THE OPERATOR. THE SURVEYOR MAKES NO GUARANTEE THAT THE UNDERGROUND UTILITIES SHOWN COMPRISE ALL SUCH UTILITIES IN THE AREA EITHER IN SERVICE OR ABANDONED. THE SURVEYOR FURTHER DOES NOT WARRANT THAT THE UNDERGROUND UTILITIES SHOWN ARE IN THE EXACT LOCATION INDICATED ALTHOUGH THE SURVEYOR DOES CERTIFY THAT THEY ARE LOCATED AS ACCURATELY AS POSSIBLE FROM THE INFORMATION AVAILABLE. THE SURVEYOR HAS NOT PHYSICALLY LOCATED THE UNDERGROUND UTILITIES.

UTILITY ELEVATIONS AND SIZES MAY HAVE BEEN MEASURED UNDER ADVERSE FIELD CONDITIONS. UPON EXPOSING THE UTILITY, ELEVATIONS AND LINE SIZES SHOULD BE VERIFIED BY THE CONTRACTOR PRIOR TO CONSTRUCTION. CONTRACTOR SHOULD VERIFY CRITICAL ELEVATIONS USING THE BENCHMARK PROVIDED BY THE SURVEYOR OR ENGINEER. ANY DISCREPANCIES SHOULD BE IMMEDIATELY BROUGHT TO THE ENGINEER'S AND SURVEYOR'S ATTENTION.

BEFORE YOU DIG
CALL OKIE
(800) 522-6543

James R. Childers Architect, Inc.
45 South 4th Street
Fort Smith, AR 72901
479-783-2480
www.childersarchitect.com

PROFESSIONAL SEAL:
REGISTERED PROFESSIONAL ENGINEER
COREY W. LIPPS
21291
3/11/20

Copyright © 2019 Cardinal Engineering
Proprietary and Confidential

CONSULTANT LOGO:
CARDINAL ENGINEERING
An ENVIRONCLEAN Company
525 Central Park Drive
Suite 500
Oklahoma City, Oklahoma 73105
P: 405-842-1066 F: 405-843-4687
OKC | Norman | Tulsa | Woodward
www.cardinalengineers.com
CA# 7110, expiration date 06.30.2020

CLIENT:
THE CHEROKEE NATION
ESTD. 1839

College of Osteopathic Medicine
AT THE CHEROKEE NATION
TAHLEQUAH, OK

KEY PLAN:

PROJECT PHASE:
BID PACKAGE 02

REVISIONS		
#	DATE	DESCRIPTION
1	04/16/19	ASI 01
2	03/11/20	ASI 03

DATE: 02-08-19
JOB NUMBER: 17-13
SHEET NUMBER: C5-102
GRADING PLAN

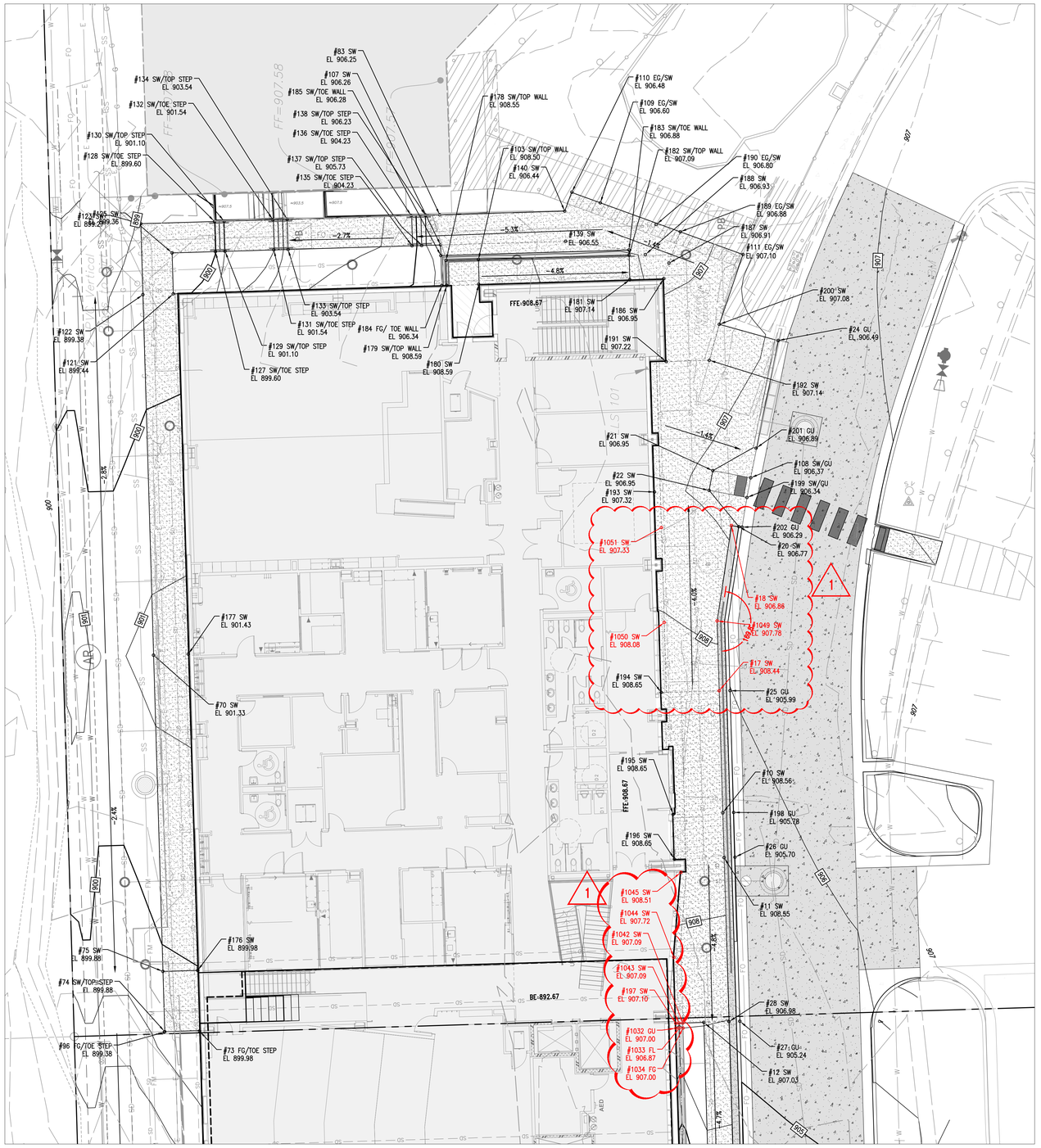

01 NORTH AREA
Scale: N.T.S.

N

0' 10' 20' 40'
SCALE: 1" = 10'

Point Table				
Point #	Elevation	Northing	Easting	Description
10	908.56	345437.41	2871351.99	SW
11	908.55	345428.47	2871352.26	SW
12	907.03	345395.67	2871348.23	SW
17	908.44	345461.70	2871351.27	SW
18	906.86	345494.60	2871353.70	SW
20	906.77	345494.38	2871355.18	SW
21	906.95	345505.53	2871350.01	SW
22	906.95	345501.60	2871349.28	SW
24	906.49	345531.45	2871363.04	GU
25	905.99	345461.71	2871353.44	GU
26	905.70	345428.56	2871354.42	GU
27	905.24	345395.91	2871355.39	GU
28	906.98	345395.81	2871353.22	SW
70	901.33	345468.79	2871238.69	SW
73	899.98	345393.94	2871247.83	FG/TOE STEP
74	899.88	345393.82	2871240.91	SW/TOP STEP
75	899.88	345405.82	2871240.55	SW
83	906.25	345556.46	2871295.64	SW
96	899.38	345393.74	2871240.83	FG/TOE STEP
103	908.50	345547.57	2871303.35	SW/TOP WALL
107	906.26	345550.46	2871295.82	SW
108	906.37	345504.11	2871357.55	SW/GU
109	906.60	345558.84	2871327.63	EG/SW
110	906.48	345560.98	2871321.95	EG/SW
111	907.10	345548.56	2871356.01	EG/SW
121	899.44	345540.74	2871242.62	SW
122	899.38	345540.56	2871236.56	SW
123	899.27	345554.70	2871236.15	SW
125	899.36	345548.88	2871242.38	SW
127	899.60	345549.14	2871251.00	SW/TOE STEP
128	899.60	345555.14	2871250.82	SW/TOE STEP
129	901.10	345549.19	2871252.92	SW/TOP STEP
130	901.10	345555.19	2871252.74	SW/TOP STEP
131	901.54	345549.48	2871262.63	SW/TOE STEP
132	901.54	345555.48	2871262.45	SW/TOE STEP
133	903.54	345549.57	2871265.46	SW/TOP STEP
134	903.54	345555.56	2871265.29	SW/TOP STEP
135	904.23	345550.30	2871290.15	SW/TOE STEP
136	904.23	345556.29	2871289.98	SW/TOE STEP
137	905.73	345550.35	2871292.07	SW/TOP STEP
138	906.23	345556.38	2871292.81	SW/TOP STEP
139	906.55	345551.20	2871320.70	SW
140	906.44	345557.20	2871320.52	SW
176	899.98	345406.02	2871247.47	SW
177	901.43	345468.99	2871245.60	SW
178	908.55	345547.38	2871296.91	SW/TOP WALL
179	908.59	345542.44	2871297.06	SW/TOP WALL
180	908.59	345542.65	2871303.42	SW
181	907.14	345543.55	2871333.49	SW
182	907.09	345548.46	2871333.34	SW/TOP WALL
183	906.88	345549.46	2871333.31	SW/TOE WALL
184	906.34	345542.41	2871296.06	FG/ TOE WALL
185	906.28	345548.35	2871295.88	SW/TOE WALL
186	906.95	345543.74	2871340.23	SW
187	906.91	345546.85	2871341.27	SW
188	906.93	345548.56	2871336.57	SW
189	906.88	345553.08	2871343.53	EG/SW
190	906.80	345554.55	2871338.76	EG/SW
191	907.22	345527.25	2871340.72	SW
192	907.14	345527.51	2871349.32	SW

Point Table				
Point #	Elevation	Northing	Easting	Description
193	907.32	345501.28	2871338.40	SW
194	908.65	345461.36	2871339.76	SW
195	908.65	345437.09	2871342.11	SW
196	908.65	345428.17	2871342.37	SW
197	907.10	345395.50	2871342.62	SW
198	905.78	345437.47	2871354.16	GU
199	906.34	345500.18	2871356.81	SW/GU
200	907.08	345534.66	2871351.31	SW
201	906.89	345510.00	2871358.63	GU
202	906.29	345494.28	2871355.84	GU
1032	907.00	345394.50	2871342.65	GU
1033	906.87	345394.52	2871343.32	FL
1034	907.00	345394.54	2871344.07	FG
1042	907.09	345395.54	2871344.04	SW
1043	907.09	345395.52	2871343.29	SW
1044	907.72	345408.62	2871342.24	SW
1045	908.51	345425.54	2871343.65	SW
1049	907.78	345475.61	2871350.86	SW
1050	908.08	345475.30	2871340.33	SW
1051	907.33	345494.19	2871339.77	SW

HARDSCAPE / LANDSCAPE PATTERNS

- CONCRETE SIDEWALKS
- HEAVY DUTY CONCRETE PAVING
- REINFORCED HEAVY DUTY CONCRETE PAVING
- HEAVY DUTY ASPHALT PAVING

POINT CODE ABBREVIATIONS

EG	EXISTING GRADE
FG	FINISHED GRADE
GRATE	TOP OF GRATE
GUT	GUTTER
MP	MID POINT
PC	POINT OF CURVATURE
SW	SIDEWALK
TC	TOP OF CURB
TP	TOP OF PAVING
TOE WALL	FINISHED GRADE AT TOE OF WALL
TOP WALL	FINISHED GRADE AT TOP OF WALL

UTILITY WARNING:
THE UNDERGROUND UTILITIES SHOWN HAVE BEEN LOCATED FROM RECORD DOCUMENTS OR FIELD LOCATIONS BY THE OPERATOR. THE SURVEYOR MAKES NO GUARANTEE THAT THE UNDERGROUND UTILITIES SHOWN COMPRISE ALL SUCH UTILITIES IN THE AREA EITHER IN SERVICE OR ABANDONED. THE SURVEYOR FURTHER DOES NOT WARRANT THAT THE UNDERGROUND UTILITIES SHOWN ARE IN THE EXACT LOCATION INDICATED ALTHOUGH THE SURVEYOR DOES CERTIFY THAT THEY ARE LOCATED AS ACCURATELY AS POSSIBLE FROM THE INFORMATION AVAILABLE. THE SURVEYOR HAS NOT PHYSICALLY LOCATED THE UNDERGROUND UTILITIES.

UTILITY ELEVATIONS AND SIZES MAY HAVE BEEN MEASURED UNDER ADVERSE FIELD CONDITIONS. UPON EXPOSING THE UTILITY, ELEVATIONS AND LINE SIZES SHOULD BE VERIFIED BY THE CONTRACTOR PRIOR TO CONSTRUCTION. CONTRACTOR SHOULD VERIFY CRITICAL ELEVATIONS USING THE BENCHMARK PROVIDED BY THE SURVEYOR OR ENGINEER. ANY DISCREPANCIES SHOULD BE IMMEDIATELY BROUGHT TO THE ENGINEER'S AND SURVEYOR'S ATTENTION.

BEFORE YOU DIG
CALL OKIE
(800) 522-6543

James R. Childers Architect, Inc.
45 South 4th Street
Fort Smith, AR 72901
479-783-2480
www.childersarchitect.com

PROFESSIONAL SEAL:
REGISTERED PROFESSIONAL ENGINEER
COREY W. LIPPS
21291
OKLAHOMA
3/11/20

Copyright © 2019 Cardinal Engineering
Unauthorized use prohibited

CONSULTANT LOGO:
CARDINAL ENGINEERING
An ENVIRONCLEAN Company
525 Central Park Drive
Suite 500
Oklahoma City, Oklahoma 73105
P: 405-842-1066 F: 405-843-4687
OKC | Norman | Tulsa | Woodward
www.cardinalengineers.com
CA# 7110, expiration date 06.30.2020

CLIENT:
THE CHEROKEE NATION
ESTD. SEPT. 6, 1839

College of Osteopathic Medicine
AT THE CHEROKEE NATION
TAHLEQUAH, OK

KEY PLAN:

PROJECT PHASE:
BID PACKAGE 01
ASI 01

REVISIONS		
#	DATE	DESCRIPTION
1	03/11/20	ASI 03

DATE:
JOB NUMBER: 17-13
SHEET NUMBER: C5-104

GRADING PLAN

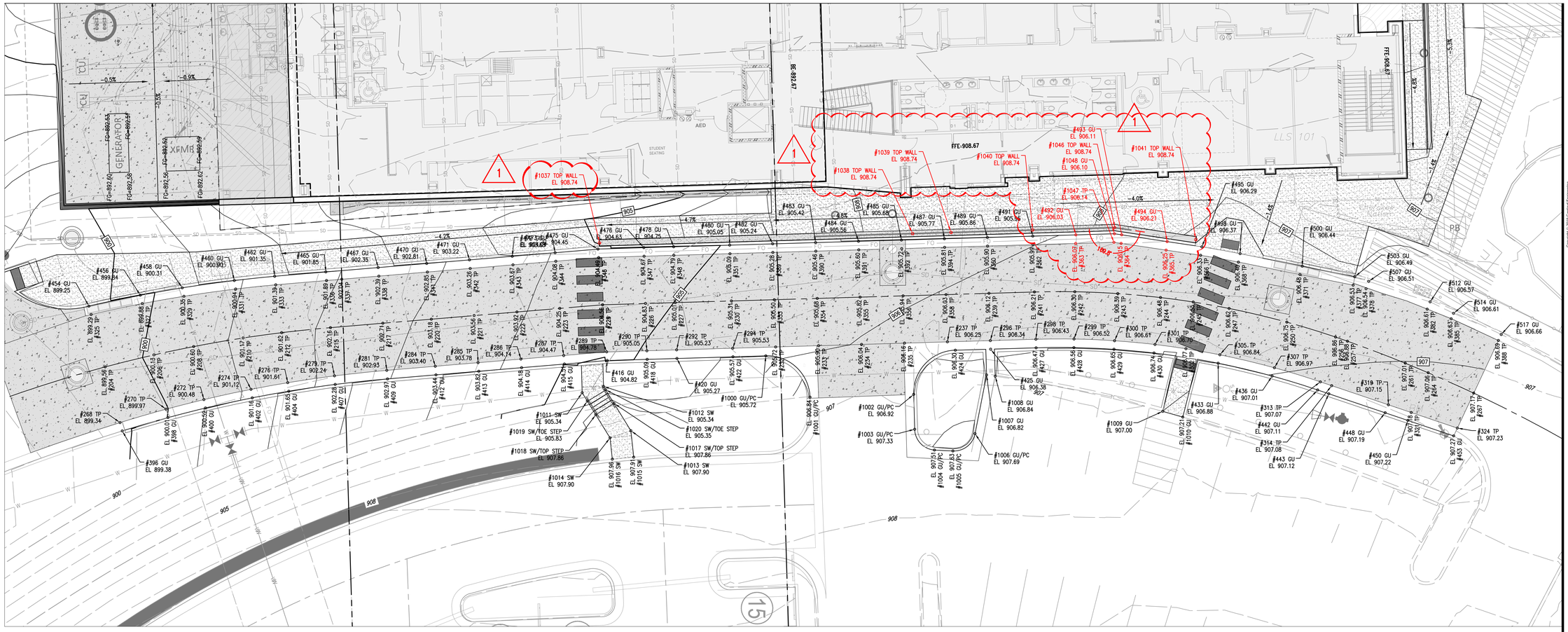

01 DRIVEWAY

Scale: N.T.S.

SCALE: 1" = 10'

Point Table

Point #	Elevation	Northing	Easting	Description
204	899.56	345240.51	2871384.02	TP
206	900.13	345251.84	2871381.23	TP
208	900.60	345261.11	2871379.28	TP
210	901.17	345272.64	2871377.29	TP
212	901.62	345281.59	2871376.05	TP
215	902.16	345292.96	2871374.88	TP
217	902.71	345305.16	2871373.86	TP
220	903.18	345316.45	2871372.91	TP
221	903.56	345326.41	2871372.08	TP
222	903.92	345336.38	2871371.24	TP
223	904.25	345346.34	2871370.40	TP
224	904.56	345356.31	2871369.57	TP
225	904.56	345356.33	2871369.57	TP
226	904.83	345366.31	2871369.27	TP
227	905.01	345373.23	2871369.07	TP
230	905.31	345386.30	2871368.68	TP
232	905.72	345396.62	2871379.38	TP
233	905.90	345406.61	2871379.08	TP
234	906.04	345416.61	2871378.79	TP
235	906.16	345426.60	2871378.49	TP
237	906.25	345436.60	2871378.19	TP
239	906.12	345446.27	2871366.90	TP
241	906.21	345456.86	2871366.59	TP
242	906.30	345466.26	2871366.53	TP
243	906.39	345476.25	2871366.96	TP
244	906.48	345486.21	2871367.88	TP
245	906.55	345493.83	2871368.93	TP
247	906.62	345502.18	2871370.42	TP
250	906.75	345515.63	2871373.61	TP
256	906.86	345526.96	2871377.08	TP
257	906.88	345529.73	2871378.04	TP
261	907.01	345543.18	2871383.16	TP
264	907.06	345548.52	2871385.38	TP
267	907.17	345559.12	2871390.12	TP
268	899.34	345243.98	2871396.98	TP
270	899.97	345254.70	2871393.86	TP
272	900.48	345263.49	2871391.62	TP
274	901.12	345274.47	2871389.24	TP
276	901.61	345283.02	2871387.69	TP
279	902.24	345293.90	2871386.10	TP

Point Table

Point #	Elevation	Northing	Easting	Description
281	902.93	345306.08	2871384.82	TP
284	903.40	345317.37	2871383.87	TP
285	903.78	345327.33	2871383.04	TP
286	904.14	345337.30	2871382.20	TP
287	904.47	345347.26	2871381.37	TP
289	904.78	345357.25	2871380.53	TP
290	905.05	345366.63	2871380.27	TP
292	905.23	345373.57	2871380.06	TP
294	905.53	345386.62	2871379.67	TP
296	906.34	345446.60	2871377.90	TP
298	906.43	345457.18	2871377.58	TP
299	906.52	345466.07	2871377.53	TP
300	906.61	345475.51	2871377.93	TP
301	906.70	345484.92	2871378.80	TP
302	906.77	345492.12	2871379.79	TP
305	906.84	345500.02	2871381.21	TP
307	906.97	345512.72	2871384.22	TP
313	907.07	345523.43	2871387.50	TP
314	907.08	345526.05	2871388.38	TP
319	907.15	345539.26	2871392.84	TP
321	907.18	345544.57	2871394.63	TP
324	907.23	345555.30	2871398.25	TP
325	899.29	345237.25	2871371.83	TP
327	899.88	345249.14	2871369.29	TP
329	900.35	345258.84	2871367.58	TP
331	900.94	345270.89	2871365.90	TP
333	901.39	345280.23	2871364.92	TP
336	901.89	345292.04	2871363.92	TP
337	902.04	345295.60	2871363.62	TP
338	902.39	345304.24	2871362.90	TP
341	902.85	345315.53	2871361.95	TP
342	903.26	345325.49	2871361.11	TP
343	903.67	345335.46	2871360.28	TP
344	904.08	345345.42	2871359.44	TP
345	904.49	345355.39	2871358.61	TP
346	904.49	345355.41	2871358.60	TP
347	904.67	345365.98	2871358.28	TP
348	904.79	345372.91	2871358.07	TP
351	905.09	345385.97	2871357.68	TP
353	905.50	345396.29	2871368.38	TP

Point Table

Point #	Elevation	Northing	Easting	Description
354	905.68	345406.29	2871368.09	TP
355	905.82	345416.28	2871367.79	TP
356	905.94	345426.28	2871367.49	TP
358	906.03	345436.27	2871367.20	TP
360	905.90	345445.94	2871355.91	TP
362	905.99	345456.53	2871355.59	TP
363	906.07	345466.46	2871355.30	TP
364	906.15	345477.04	2871355.29	TP
365	906.25	345487.51	2871356.85	TP
366	906.33	345495.53	2871358.06	TP
368	906.40	345504.34	2871359.64	TP
371	906.48	345518.67	2871362.51	TP
377	906.53	345531.05	2871365.00	TP
378	906.54	345534.06	2871365.84	TP
382	906.61	345548.28	2871370.59	TP
385	906.63	345553.87	2871372.83	TP
388	906.69	345564.86	2871377.88	TP
389	905.28	345395.97	2871357.39	TP
390	905.46	345405.96	2871357.09	TP
391	905.60	345415.96	2871356.79	TP
392	905.72	345425.95	2871356.50	TP
394	905.81	345435.95	2871356.20	TP
396	899.38	345244.50	2871398.91	GU
398	900.01	345255.14	2871395.81	GU
400	900.52	345263.87	2871393.59	GU
402	901.16	345274.77	2871391.22	GU
404	901.65	345283.26	2871389.68	GU
407	902.28	345294.07	2871388.09	GU
409	902.97	345306.24	2871386.81	GU
412	903.44	345317.54	2871385.87	GU
413	903.82	345327.50	2871385.03	GU
414	904.18	345337.47	2871384.19	GU
415	904.51	345347.43	2871383.36	GU
416	904.82	345357.40	2871382.52	GU
418	905.09	345366.69	2871382.26	GU
420	905.27	345373.63	2871382.06	GU
422	905.57	345386.68	2871381.67	GU
424	906.30	345438.44	2871380.14	GU
425	906.38	345446.65	2871379.90	GU
427	906.47	345457.24	2871379.58	GU

Point Table

Point #	Elevation	Northing	Easting	Description
428	906.56	345466.04	2871379.53	GU
429	906.65	345475.38	2871379.93	GU
430	906.74	345484.69	2871380.79	GU
433	906.88	345499.62	2871383.16	GU
436	907.01	345512.19	2871386.15	GU
442	907.11	345522.79	2871389.39	GU
443	907.12	345525.39	2871390.27	GU
448	907.19	345538.50	2871394.69	GU
450	907.22	345543.78	2871396.47	GU
453	907.27	345554.45	2871400.06	GU
454	899.25	345236.73	2871369.89	GU
456	899.84	345248.70	2871367.34	GU
458	900.31	345258.46	2871365.62	GU
460	900.90	345270.59	2871363.92	GU
462	901.35	345279.99	2871362.93	GU
465	901.85	345291.88	2871361.93	GU
467	902.35	345304.07	2871360.90	GU
470	902.81	345315.36	2871359.96	GU
471	903.22	345325.33	2871359.12	GU
472	903.63	345335.29	2871358.29	GU
473	904.04	345345.26	2871357.45	GU
475	904.45	345355.25	2871356.61	GU
476	904.63	345365.92	2871356.28	GU
478	904.75	345372.86	2871356.07	GU
480	905.05	345385.91	2871355.68	GU
482	905.24	345395.91	2871355.39	GU
483	905.42	345405.90	2871355.09	GU
484	905.56	345415.90	2871354.80	GU
485	905.68	345425.89	2871354.50	GU
487	905.77	345435.89	2871354.20	GU
489	905.86	345445.89	2871353.91	GU
491	905.95	345456.47	2871353.59	GU
492	906.03	345466.49	2871353.30	GU
493	906.11	345477.18	2871353.29	GU
494	906.21	345487.75	2871354.87	GU
495	906.29	345495.84	2871356.08	GU
498	906.37	345504.75	2871357.68	GU
500	906.44	345519.20	2871360.59	GU
503	906.49	345531.44	2871363.04	GU
507	906.51	345534.67	2871364.12	GU

Point Table

Point #	Elevation	Northing	Easting	Description
512	906.57	345548.98	2871368.88	GU
514	906.61	345554.41	2871371.55	GU
517	906.66	345565.52	2871376.49	GU
1000	905.72	345394.31	2871381.45	GU/PC
1001	906.84	345404.60	2871391.07	GU/PC
1002	906.92	345428.74	2871390.42	GU/PC
1003	907.33	345428.97	2871398.53	GU/PC
1004	907.51	345433.57	2871403.37	GU/PC
1005	907.63	345437.88	2871403.58	GU/PC
1006	907.69	345443.03	2871399.55	GU/PC
1007	906.82	345445.71	2871385.90	GU
1008	906.84	345447.72	2871386.19	GU
1009	907.00	345486.72	2871394.36	GU
1010	907.21	345491.39	2871395.71	GU
1011	905.34	345351.57	2871390.03	SW
1012	905.34	345356.53	2871388.55	SW
1013	907.90	345362.90	2871398.87	SW
1014	907.90	345358.05	2871400.53	SW
1015	907.91	345363.55	2871405.02	SW
1016	907.96	345358.58	2871405.50	SW
1017	907.86	345358.98	2871392.52	SW/TOP STEP
1018	907.86	345354.72	2871395.14	SW/TOP STEP
1019	905.83	345352.75	2871391.95	SW/TOE STEP
1020	905.35	345350.01	2871389.34	SW/TOE STEP
1037	908.74	345355.60	2871355.16	TOP WALL
1038	908.74	345428.49	2871353.01	TOP WALL
1039	908.74	345437.43	2871352.74	TOP WALL
1040	908.74	345456.43	2871352.18	TOP WALL
1041	908.74	345494.41	2871354.43	TOP WALL
1046	908.74	345475.56	2871351.61	TOP WALL
1047	906.14	345475.36	2871355.04	TP
1048	906.10	345475.48	2871353.04	GU

HARDSCAPE / LANDSCAPE PATTERNS

- CONCRETE SIDEWALKS
- HEAVY DUTY CONCRETE PAVING
- REINFORCED HEAVY DUTY CONCRETE PAVING
- HEAVY DUTY ASPHALT PAVING

POINT CODE ABBREVIATIONS

EG	EXISTING GRADE
FG	FINISHED GRADE
GRATE	TOP OF GRATE
GUT	GUTTER
MP	MID POINT
PC	POINT OF CURVATURE
SW	SIDEWALK
TC	TOP OF CURB
TP	TOP OF PAVING
TOE WALL	FINISHED GRADE AT TOE OF WALL
TOP WALL	FINISHED GRADE AT TOP OF WALL

UTILITY WARNING:
THE UNDERGROUND UTILITIES SHOWN HAVE BEEN LOCATED FROM RECORD DOCUMENTS OR FIELD LOCATIONS BY THE OPERATOR. THE SURVEYOR MAKES NO GUARANTEE THAT THE UNDERGROUND UTILITIES SHOWN COMPRISE ALL SUCH UTILITIES IN THE AREA EITHER IN SERVICE OR ABANDONED. THE SURVEYOR FURTHER DOES NOT WARRANT THAT THE UNDERGROUND UTILITIES SHOWN ARE IN THE EXACT LOCATION INDICATED ALTHOUGH THE SURVEYOR DOES CERTIFY THAT THEY ARE LOCATED AS ACCURATELY AS POSSIBLE FROM THE INFORMATION AVAILABLE. THE SURVEYOR HAS NOT PHYSICALLY LOCATED THE UNDERGROUND UTILITIES.

UTILITY ELEVATIONS AND SIZES MAY HAVE BEEN MEASURED UNDER ADVERSE FIELD CONDITIONS. UPON EXPOSING THE UTILITY, ELEVATIONS AND LINE SIZES SHOULD BE VERIFIED BY THE CONTRACTOR PRIOR TO CONSTRUCTION. CONTRACTOR SHOULD VERIFY CRITICAL ELEVATIONS USING THE BENCHMARK PROVIDED BY THE SURVEYOR OR ENGINEER. ANY DISCREPANCIES SHOULD BE IMMEDIATELY BROUGHT TO THE ENGINEER'S AND SURVEYOR'S ATTENTION.

BEFORE YOU DIG
CALL OKIE
(800) 522-6543

James R. Childers Architect, Inc.
45 South 4th Street
Fort Smith, AR 72901
479-783-2480
www.childersarchitect.com

PROFESSIONAL SEAL:
REGISTERED PROFESSIONAL ENGINEER
COREY W. LIPPS
21291
3/11/20

Copyright © 2019 Cardinal Engineering
All Rights Reserved

CONSULTANT LOGO:
CARDINAL ENGINEERING
An ENVIRONCLEAN Company
525 Central Park Drive
Suite 500
Oklahoma City, Oklahoma 73105
P: 405-842-1066 F: 405-843-4687
OKC | Norman | Tulsa | Woodward
www.cardinalengineers.com
CA # 7110, expiration date 06.30.2020

CLIENT:
THE CHEROKEE NATION
ESTD. 6.1839

College of Osteopathic Medicine
AT THE CHEROKEE NATION
TAHLEQUAH, OK

KEY PLAN:

PROJECT PHASE:
BID PACKAGE 01
ASI 01

REVISIONS

#	DATE	DESCRIPTION
1	03/11/20	ASI 03

DATE:
JOB NUMBER: 17-13
SHEET NUMBER: C5-105

GRADING PLAN

GENERAL NOTES - FLOOR PLAN

1. ALL EXTERIOR DIMENSIONS ARE FROM FACE OF EXTERIOR STUD, U.N.O
2. REFER TO SHEET A2.00 - A2.01 FOR PARTITION TYPES AND FRAMING DETAILS
3. ALL GYPSUM BOARD TO BE MOLD RESISTANT

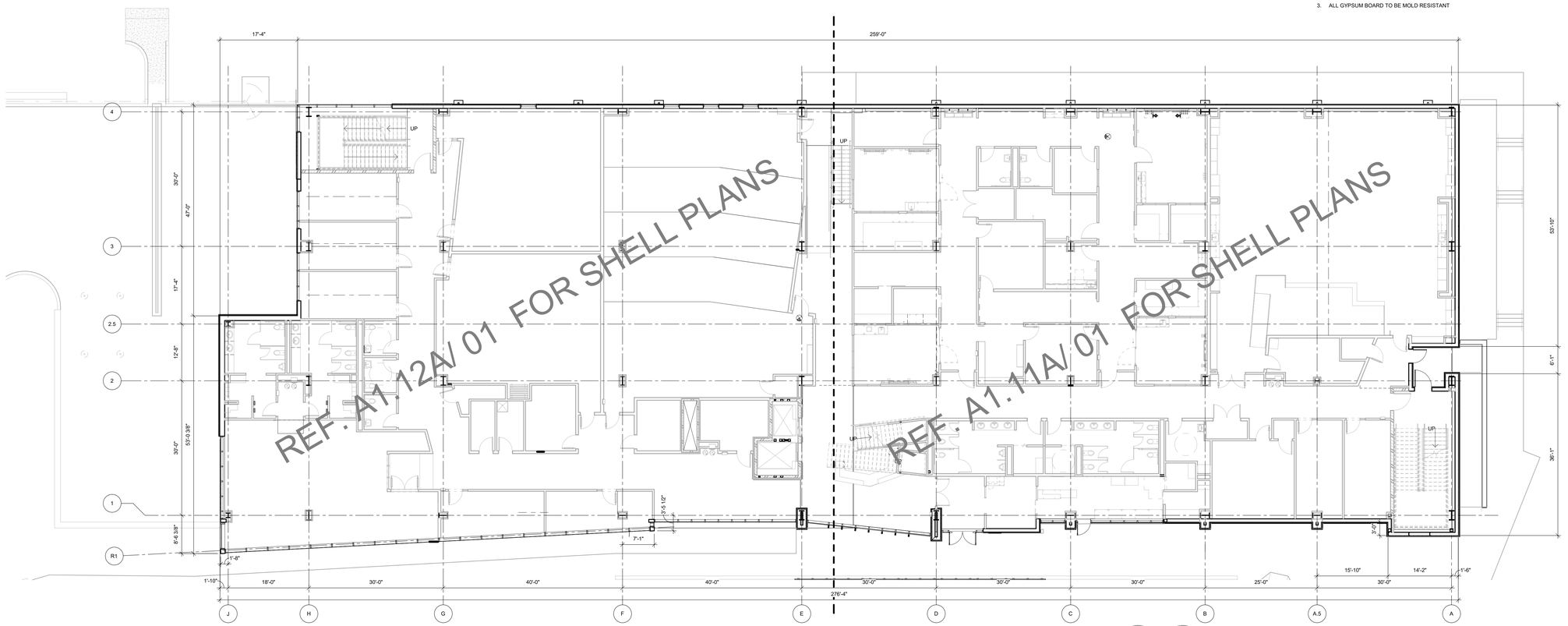

02 OVERALL FLOOR PLAN - LEVEL 01
3/32" = 1'-0"

PLAN NORTH

TRUE NORTH



01 OVERALL FLOOR PLAN - BASEMENT LEVEL
3/32" = 1'-0"

PLAN NORTH

TRUE NORTH

James R. Childers Architect, Inc.
45 South 4th Street
Fort Smith, AR 72901
479-783-2480
www.childersarchitect.com

PROFESSIONAL SEAL:

STATE OF OKLAHOMA — JAMES R. CHILDERS — REGISTERED ARCHITECT

08-23-2019

CONSULTANT LOGO:

CLIENT:

THE CHEROKEE NATION — SEPT. 6, 1839

College of Osteopathic Medicine
AT THE CHEROKEE NATION
TAHLEQUAH, OKLAHOMA

KEY PLAN:

02 01

PROJECT PHASE:
CONSTRUCTION DOCUMENTS

REVISIONS		
#	DATE	DESCRIPTION

DATE:	JOB NUMBER:
08-23-19	17-13

SHEET NUMBER:
A1.00

OVERALL FLOOR PLANS

GENERAL NOTES - FLOOR PLAN

1. ALL EXTERIOR DIMENSIONS ARE FROM FACE OF EXTERIOR STUD, U.N.O
2. REFER TO SHEET A2.00 - A2.01 FOR PARTITION TYPES AND FRAMING DETAILS
3. ALL GYPSUM BOARD TO BE MOLD RESISTANT

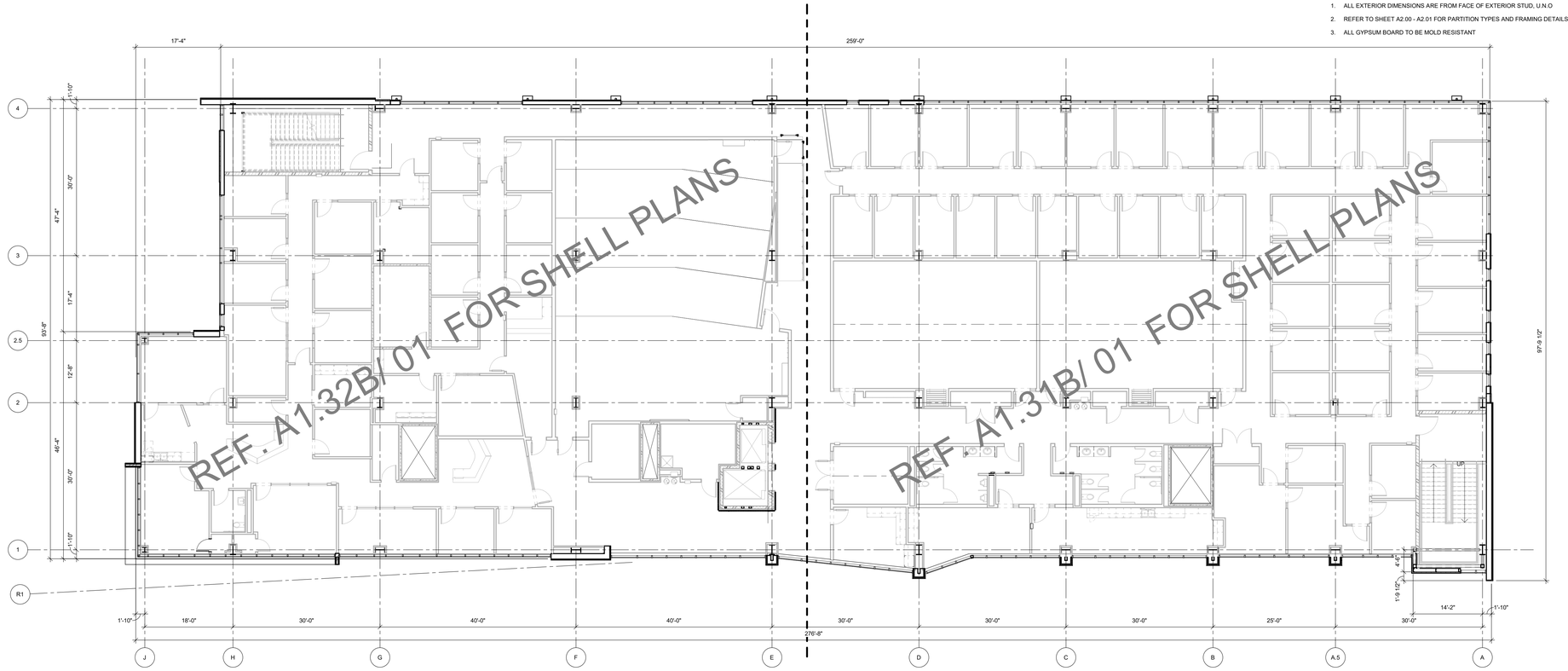

02 OVERALL FLOOR PLAN - LEVEL 03
3/32" = 1'-0"

PLAN NORTH | TRUE NORTH

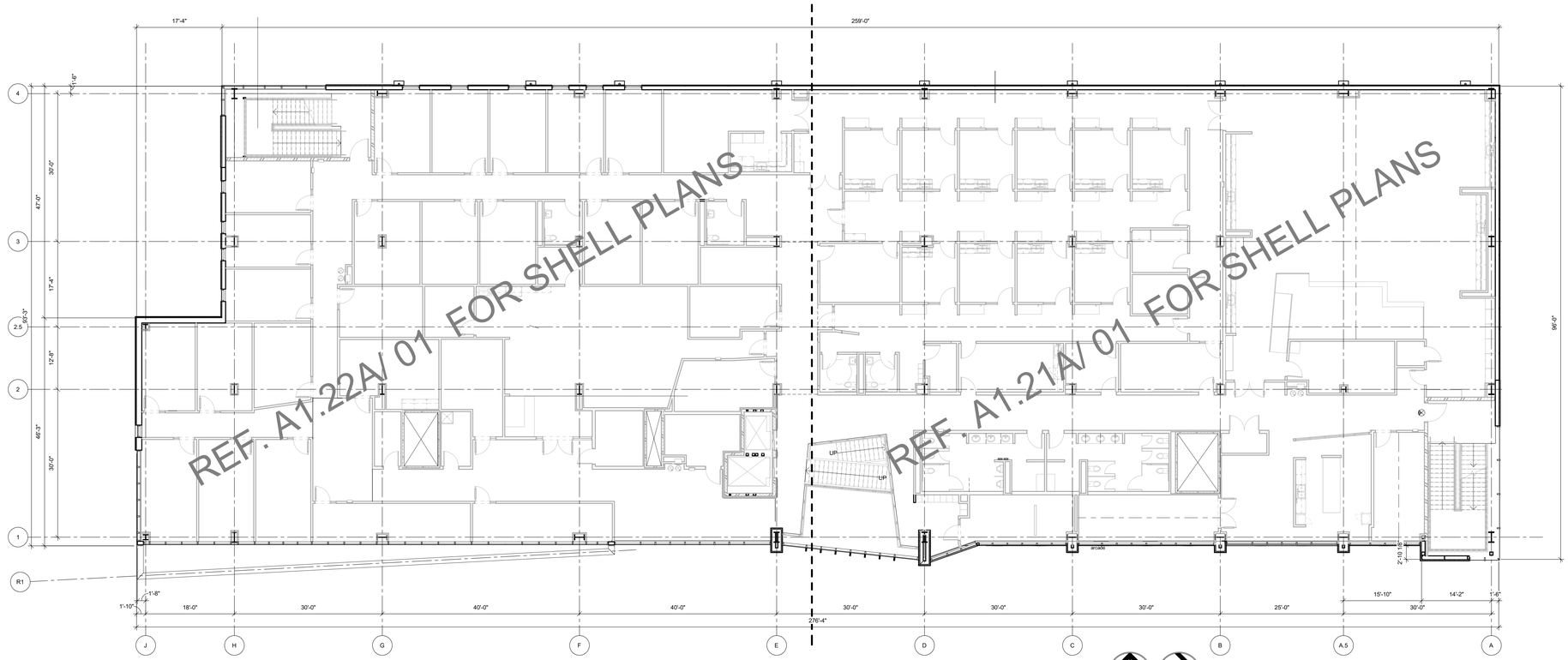

01 OVERALL FLOOR PLAN - LEVEL 02
3/32" = 1'-0"

PLAN NORTH | TRUE NORTH

James R. Childers Architect, Inc.
45 South 4th Street
Fort Smith, AR 72901
479-783-2480
www.childersarchitect.com

PROFESSIONAL SEAL:

STATE OF OKLAHOMA — JAMES R. CHILDERS — REGISTERED ARCHITECT

08-23-2019

CONSULTANT LOGO:

CLIENT:

THE CHEROKEE NATION — SEAL OF — SEPT. 6, 1839

College of Osteopathic Medicine
AT THE CHEROKEE NATION
TAHLEQUAH, OKLAHOMA

KEY PLAN:

02 | 01

PROJECT PHASE:
CONSTRUCTION DOCUMENTS

REVISIONS		
#	DATE	DESCRIPTION

DATE:	JOB NUMBER:
08-23-19	17-13

SHEET NUMBER:
A1.01

OVERALL FLOOR PLANS

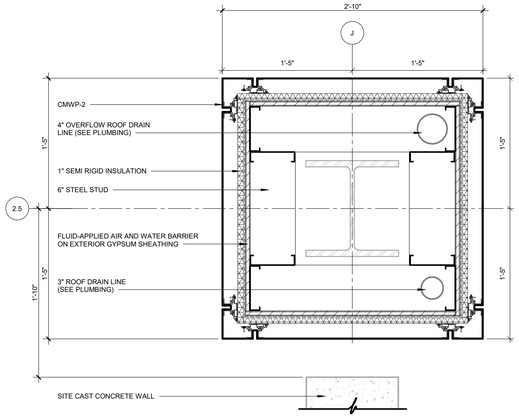

04 PLAN DETAIL
1 1/2" = 1'-0"

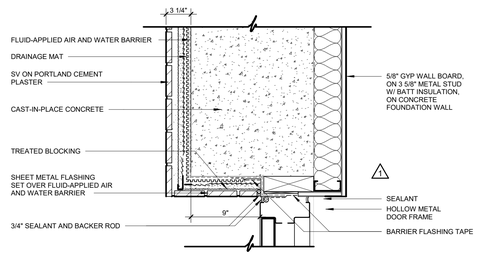

03 PLAN DETAIL
1 1/2" = 1'-0"

GENERAL NOTES - FLOOR PLAN

1. ALL EXTERIOR DIMENSIONS ARE FROM FACE OF EXTERIOR STUD, U.N.O
2. REFER TO SHEET A2.00 - A2.01 FOR PARTITION TYPES AND FRAMING DETAILS
3. ALL GYPSUM BOARD TO BE MOLD RESISTANT

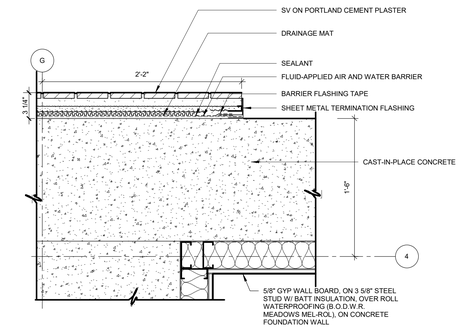

02 PLAN DETAIL
1 1/2" = 1'-0"

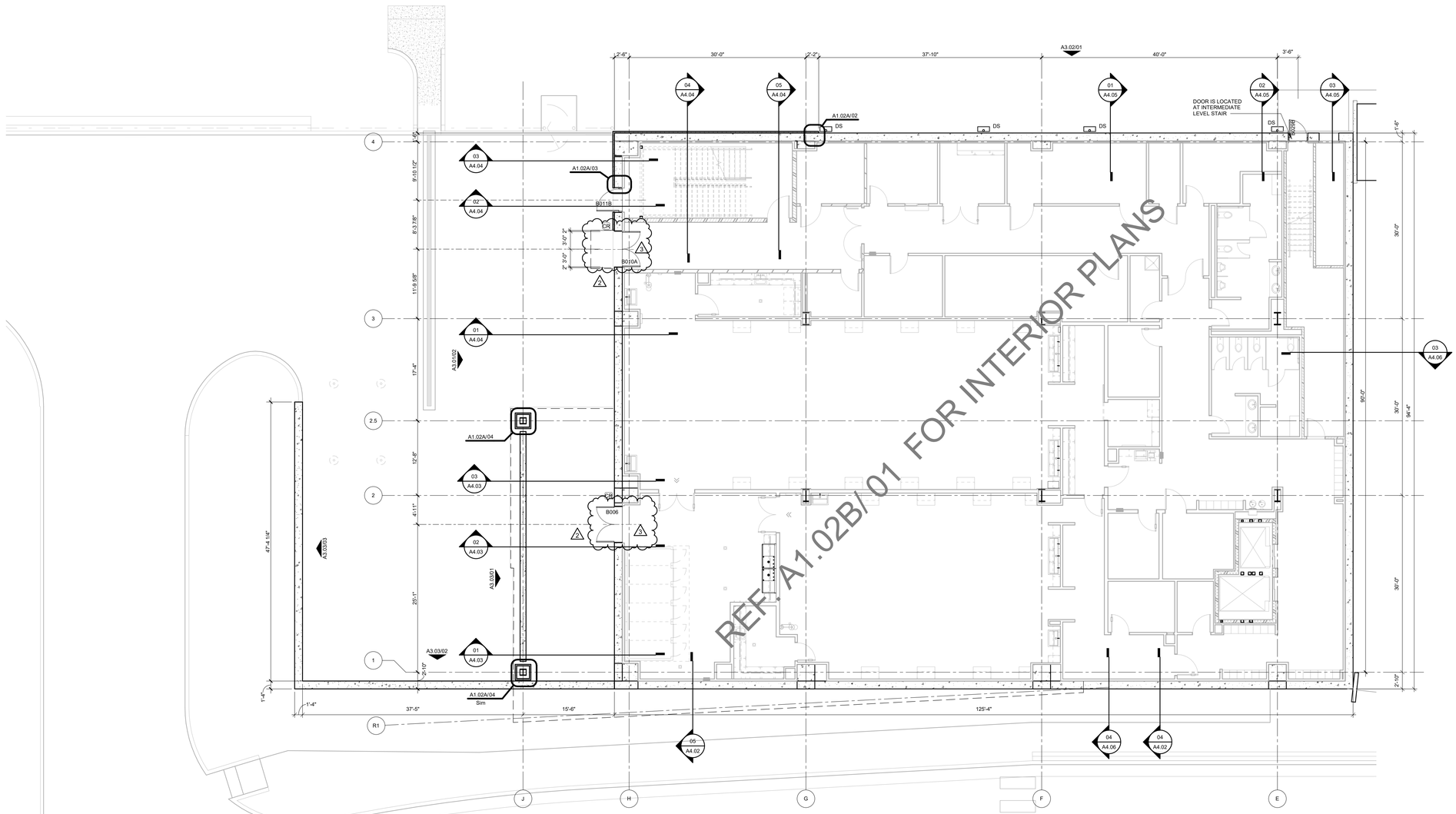

REF. A1.02B/ 01 FOR INTERIOR PLANS

01 FLOOR PLAN BASEMENT LEVEL SECTOR 02 - SHELL
1/8" = 1'-0"

James R. Childers Architect, Inc.
45 South 4th Street
Fort Smith, AR 72901
479-783-2480
www.childersarchitect.com

PROFESSIONAL SEAL:

STATE OF OKLAHOMA — JAMES R. CHILDERS — REGISTERED ARCHITECT

12-20-2019

CONSULTANT LOGO:

CLIENT:

THE CHEROKEE NATION — SEAL OF THE — SEPT. 6, 1839

COLLEGE OF Osteopathic Medicine
AT THE CHEROKEE NATION
TAHLEQUAH, OKLAHOMA

KEY PLAN:



PROJECT PHASE:

CONSTRUCTION DOCUMENTS

REVISIONS		
#	DATE	DESCRIPTION
1	09/30/19	ADDENDUM 01
2	09/16/19	ADDENDUM 02
3	12/20/19	ASI 03

DATE:	JOB NUMBER:
08-23-19	17-13

SHEET NUMBER:

A1.02A

FLOOR PLAN BASEMENT LEVEL SECTOR 02 SHELL

GENERAL NOTES - FLOOR PLAN

1. ALL EXTERIOR DIMENSIONS ARE FROM FACE OF EXTERIOR STUD, U.N.O
2. ALL INTERIOR DIMENSIONS ARE FROM FACE OF FINISH WALL, U.N.O.
3. REFER TO SHEET A1.60 - A1.65 TOILET AND SHOWER PLANS / ELEVATIONS / ACCESSORIES
4. REFER TO SHEET A2.00 - A2.01 FOR PARTITION TYPES AND FRAMING DETAILS

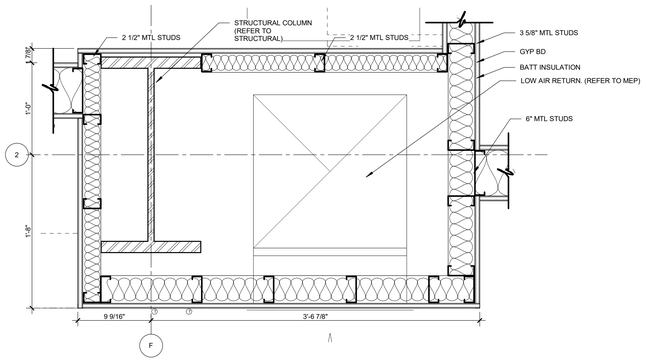

05 PLAN DETAIL @ COLUMN
1 1/2" = 1'-0"

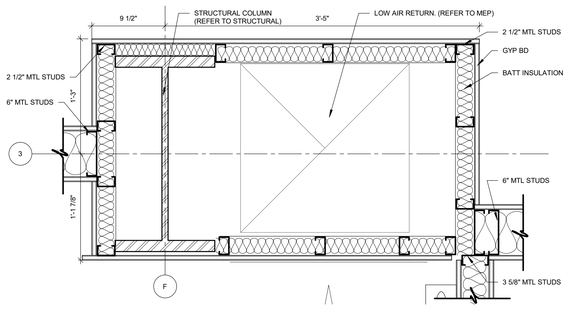

04 PLAN DETAIL @ COLUMN
1 1/2" = 1'-0"

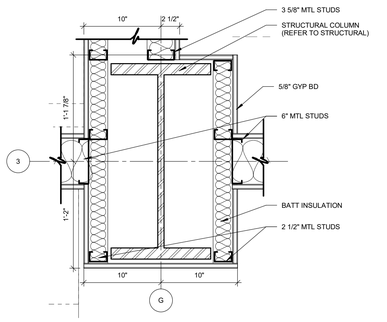

03 PLAN DETAIL @ COLUMN
1 1/2" = 1'-0"

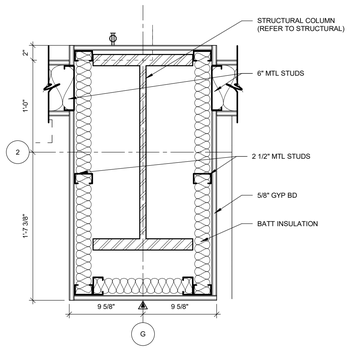

02 PLAN DETAIL @ COLUMN
1 1/2" = 1'-0"

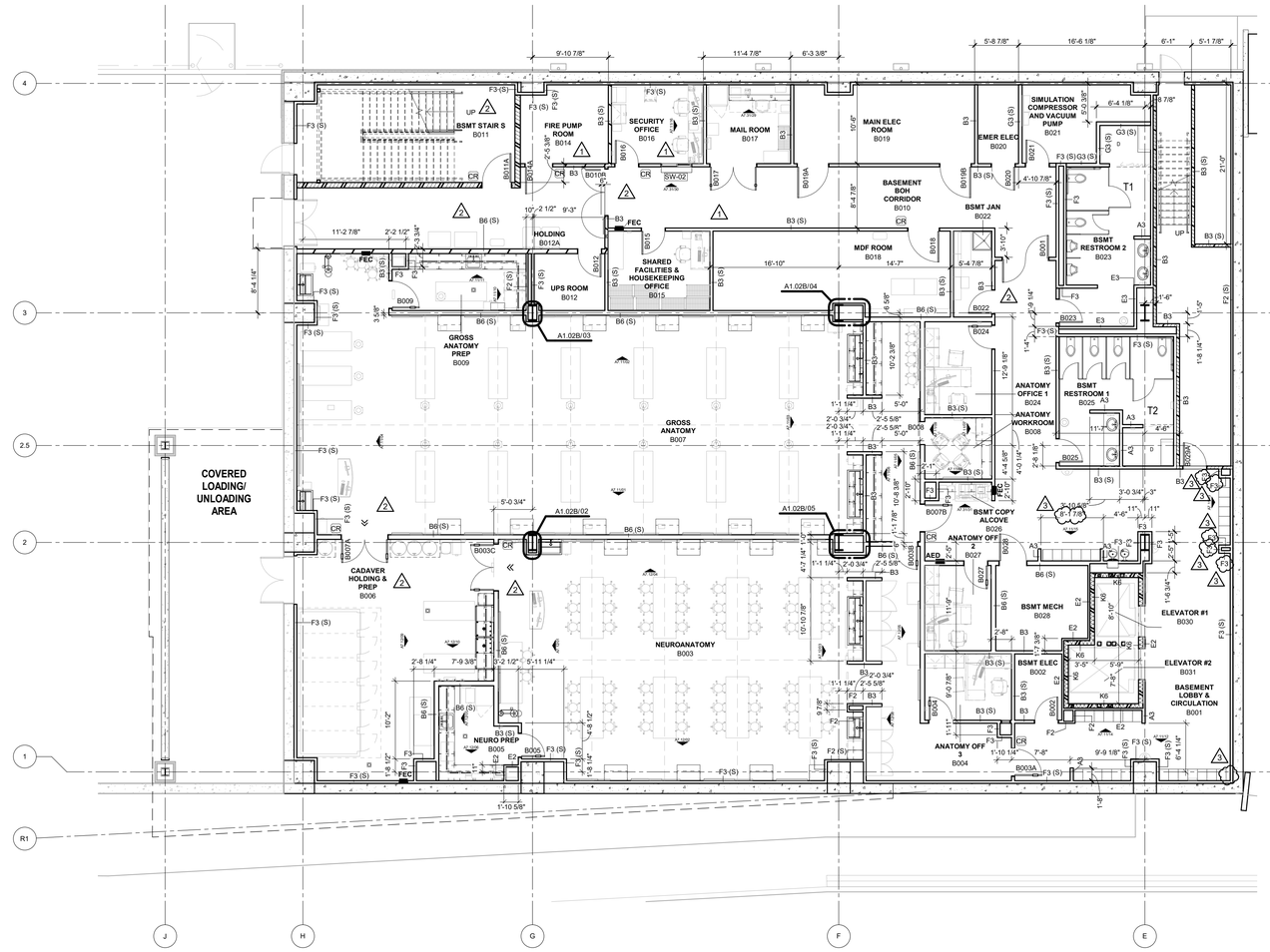

PLAN NORTH / TRUE NORTH

01 FLOOR PLAN BASEMENT LEVEL SECTOR 02
1/8" = 1'-0"

James R. Childers Architect, Inc.
45 South 4th Street
Fort Smith, AR 72901
479-783-2480
www.childersarchitect.com

PROFESSIONAL SEAL:

STATE OF OKLAHOMA — JAMES R. CHILDERS — REGISTERED ARCHITECT

02-03-2020

CONSULTANT LOGO:

CLIENT:

THE CHEROKEE NATION — SEAL OF — EST. BY THE TREATY OF — DEPT. 6, 1839

College of Osteopathic Medicine
AT THE CHEROKEE NATION
TAHLEQUAH, OKLAHOMA

KEY PLAN:

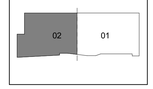

PROJECT PHASE:

CONSTRUCTION DOCUMENTS

REVISIONS

#	DATE	DESCRIPTION
1	09/09/19	ADDENDUM 01
2	09/16/19	ADDENDUM 02
3	02/03/20	ASI 05

DATE:	JOB NUMBER:
08-23-19	17-13

SHEET NUMBER:

A1.02B

FLOOR PLAN BASEMENT LEVEL SECTOR 02

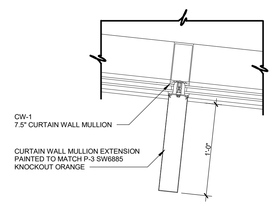

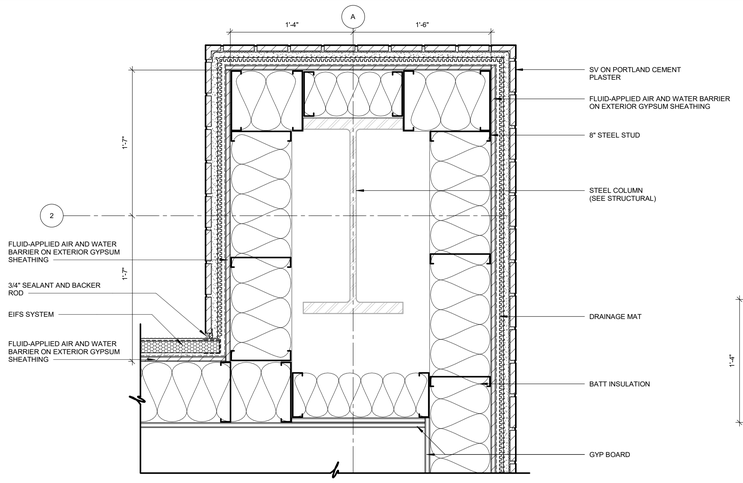

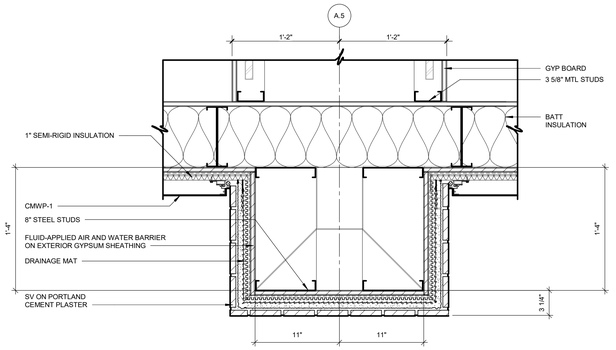

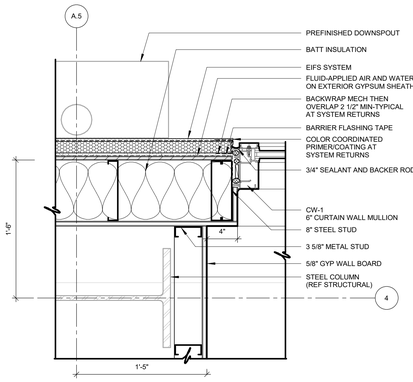

GENERAL NOTES - FLOOR PLAN

1. ALL EXTERIOR DIMENSIONS ARE FROM FACE OF EXTERIOR STUD, U.N.O
2. REFER TO SHEET A2.00 - A2.01 FOR PARTITION TYPES AND FRAMING DETAILS
3. ALL GYPSUM BOARD TO BE MOLD RESISTANT

08 PLAN DETAIL
1 1/2" = 1'-0"

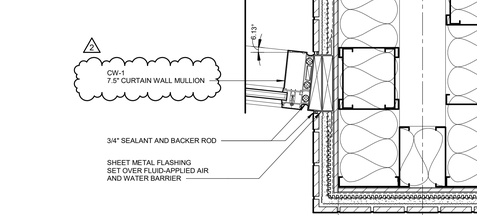

07 PLAN DETAIL
1 1/2" = 1'-0"

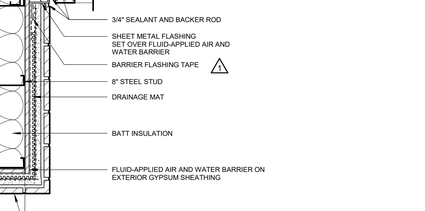

06 PLAN DETAIL
1 1/2" = 1'-0"

05 PLAN DETAIL
1 1/2" = 1'-0"

04 PLAN DETAIL
1 1/2" = 1'-0"

03 PLAN DETAIL
1 1/2" = 1'-0"

02 PLAN DETAIL
1 1/2" = 1'-0"

REF. A1.11B/01 FOR INTERIOR PLANS

PLAN NORTH / TRUE NORTH

01 FLOOR PLAN LEVEL 01 SECTOR 01 SHELL
1/8" = 1'-0"

James R. Childers Architect, Inc.
45 South 4th Street
Fort Smith, AR 72901
479-783-2480
www.childersarchitect.com

PROFESSIONAL SEAL:



02-03-2020

CONSULTANT LOGO:

CLIENT:

COLLEGE OF Osteopathic Medicine
AT THE CHEROKEE NATION
TAHLEQUAH, OKLAHOMA

KEY PLAN:

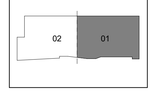

PROJECT PHASE:

CONSTRUCTION DOCUMENTS

REVISIONS		
#	DATE	DESCRIPTION
1	09/09/19	ADDENDUM 01
2	02/03/20	ASI.05

DATE:	JOB NUMBER:
08-23-19	17-13

SHEET NUMBER:

A1.11A

FLOOR PLAN LEVEL 01 SECTOR 01 SHELL

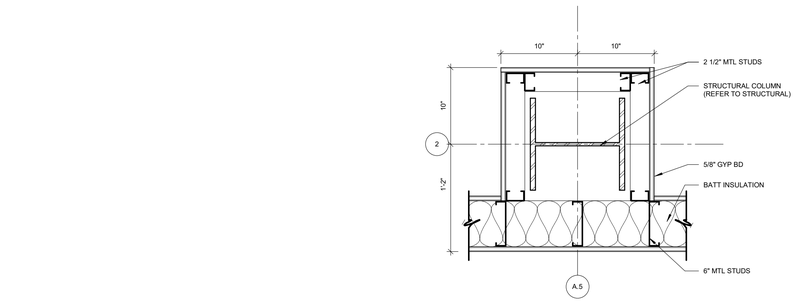

05 PLAN DETAIL @ COLUMN
1 1/2" = 1'-0"

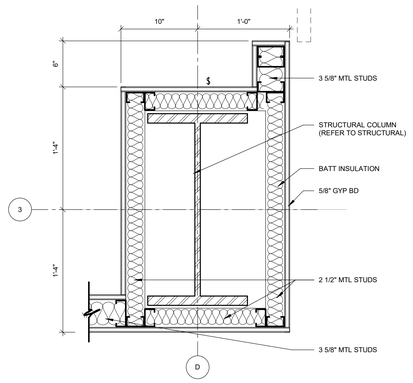

08 PLAN DETAIL @ COLUMN
1 1/2" = 1'-0"

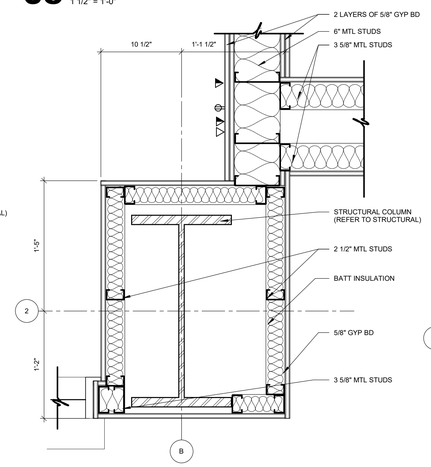

04 PLAN DETAIL @ COLUMN
1 1/2" = 1'-0"

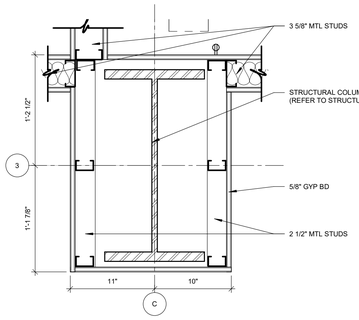

07 PLAN DETAIL @ COLUMN
1 1/2" = 1'-0"

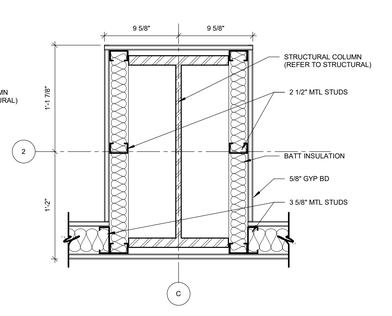

03 PLAN DETAIL @ COLUMN
1 1/2" = 1'-0"

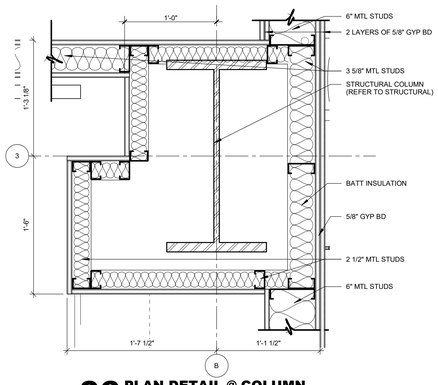

06 PLAN DETAIL @ COLUMN
1 1/2" = 1'-0"

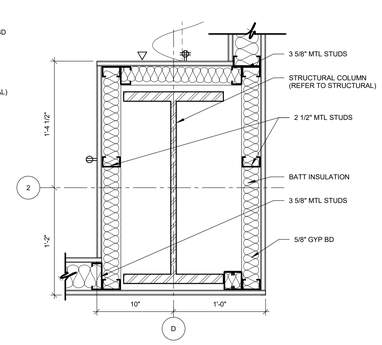

02 PLAN DETAIL @ COLUMN
1 1/2" = 1'-0"

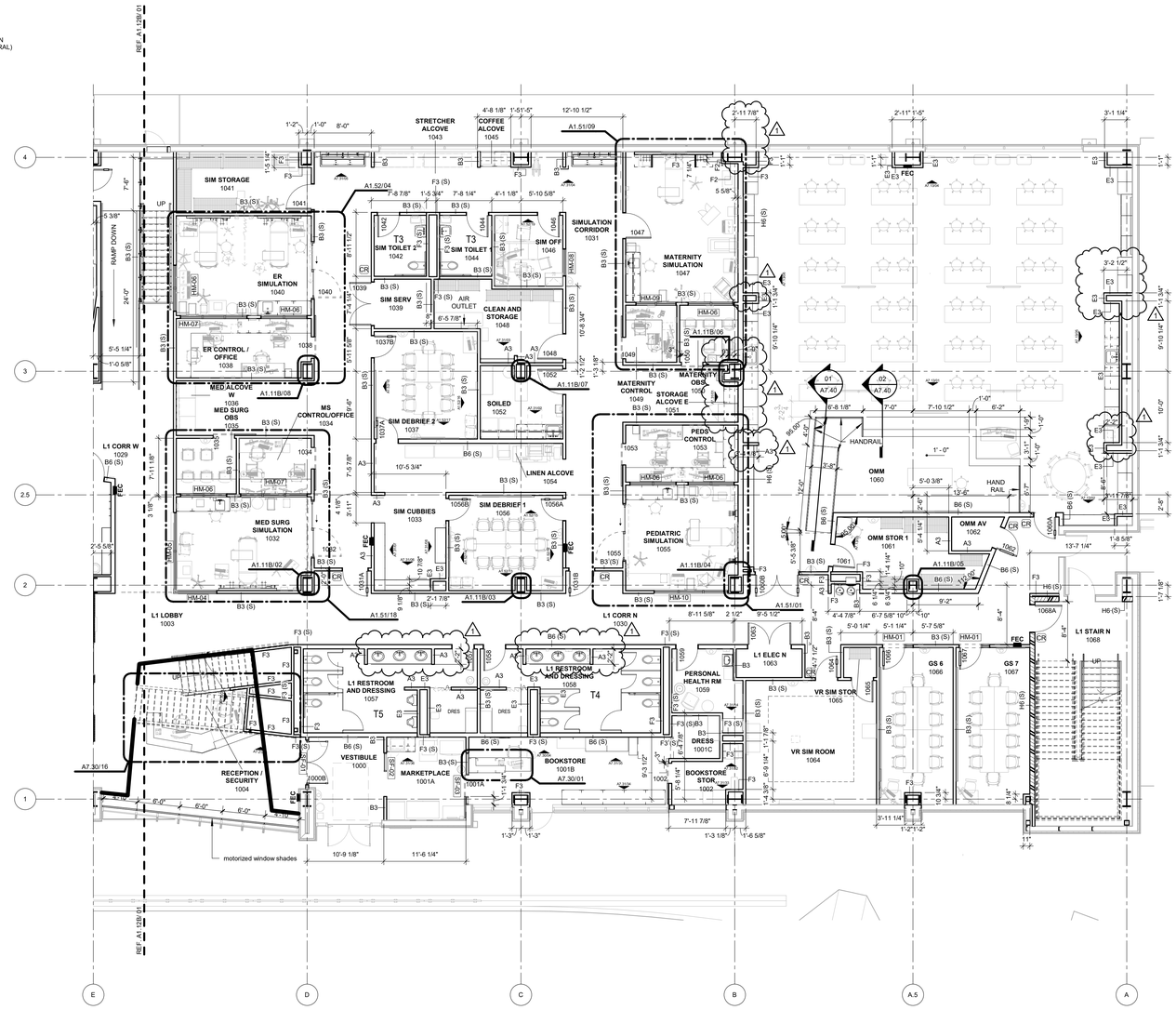

01 FLOOR PLAN LEVEL 01 SECTOR 01
1/8" = 1'-0"

PLAN NORTH

TRUE NORTH

GENERAL NOTES - FLOOR PLAN

1. ALL EXTERIOR DIMENSIONS ARE FROM FACE OF EXTERIOR STUD, U.N.O
2. ALL INTERIOR DIMENSIONS ARE FROM FACE OF FINISH WALL, U.N.O.
3. REFER TO SHEET A1.60 - A1.65 TOILET AND SHOWER PLANS / ELEVATIONS / ACCESSORIES
4. REFER TO SHEET A2.00 - A2.01 FOR PARTITION TYPES AND FRAMING DETAILS

James R. Childers Architect, Inc.
45 South 4th Street
Fort Smith, AR 72901
479-783-2480
www.childersarchitect.com

PROFESSIONAL SEAL:



02-18-2020

CONSULTANT LOGO:

CLIENT:

COLLEGE OF Osteopathic Medicine
AT THE CHEROKEE NATION
TAHLEQUAH, OKLAHOMA

KEY PLAN:

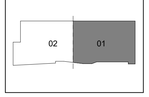

PROJECT PHASE:

CONSTRUCTION DOCUMENTS

#	DATE	REVISIONS DESCRIPTION
1	02/18/20	ASI 07

DATE: 08-23-19

JOB NUMBER: 17-13

SHEET NUMBER:

A1.11B

FLOOR PLAN LEVEL 01 SECTOR 01

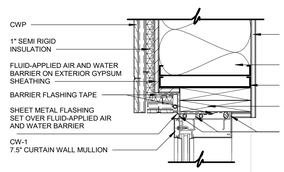

13 PLAN DETAIL
1 1/2" = 1'-0"

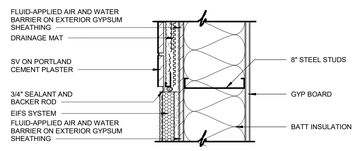

08 PLAN DETAIL
1 1/2" = 1'-0"

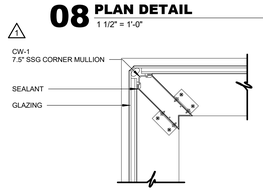

07 PLAN DETAIL
1 1/2" = 1'-0"

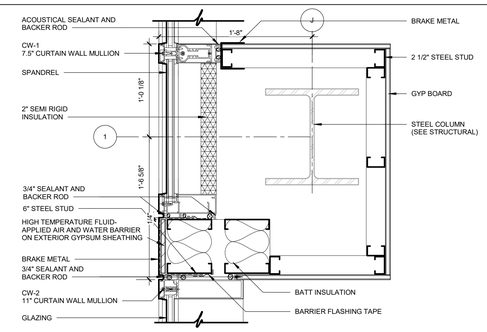

05 PLAN DETAIL
1 1/2" = 1'-0"

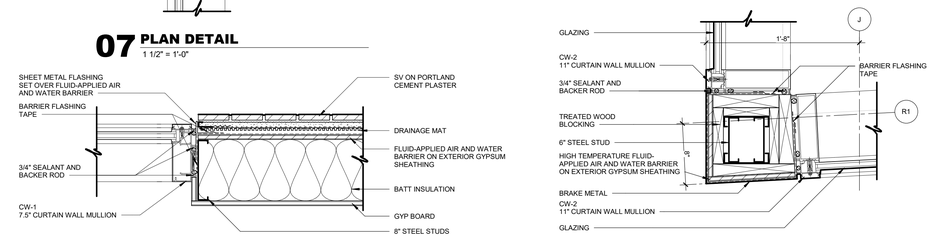

06 PLAN DETAIL
1 1/2" = 1'-0"

04 PLAN DETAIL
1 1/2" = 1'-0"

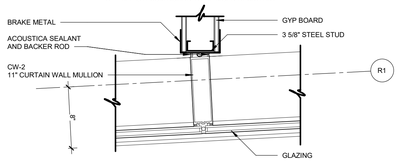

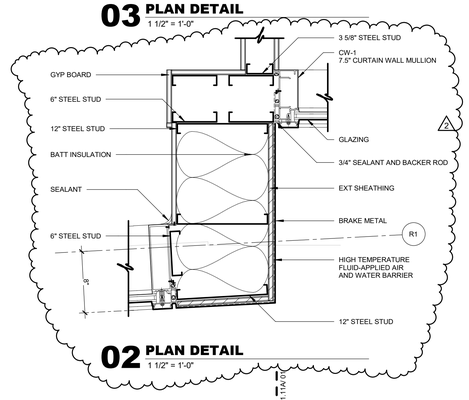

03 PLAN DETAIL
1 1/2" = 1'-0"

02 PLAN DETAIL
1 1/2" = 1'-0"

GENERAL NOTES - FLOOR PLAN

1. ALL EXTERIOR DIMENSIONS ARE FROM FACE OF EXTERIOR STUD, U.N.O
2. REFER TO SHEET A2.00 - A2.01 FOR PARTITION TYPES AND FRAMING DETAILS
3. ALL GYPSUM BOARD TO BE MOLD RESISTANT







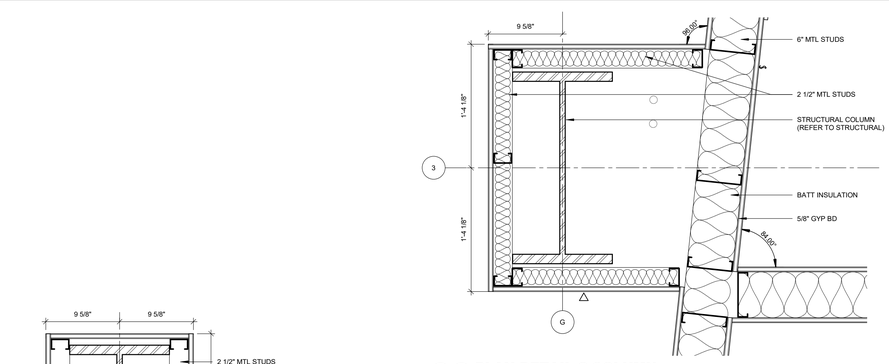

06 PLAN DETAIL @ COLUMN
1 1/2" = 1'-0"

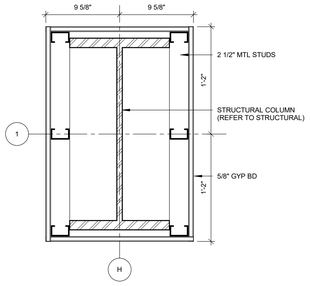

10 PLAN DETAIL @ COLUMN
1 1/2" = 1'-0"

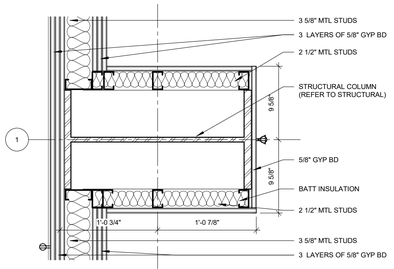

09 PLAN DETAIL @ COLUMN
1 1/2" = 1'-0"

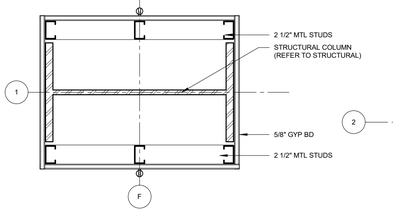

08 PLAN DETAIL @ COLUMN
1 1/2" = 1'-0"

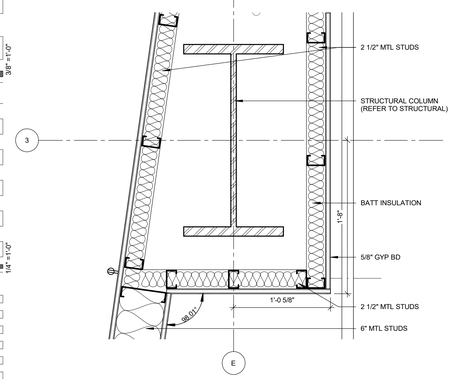

07 PLAN DETAIL @ COLUMN
1 1/2" = 1'-0"

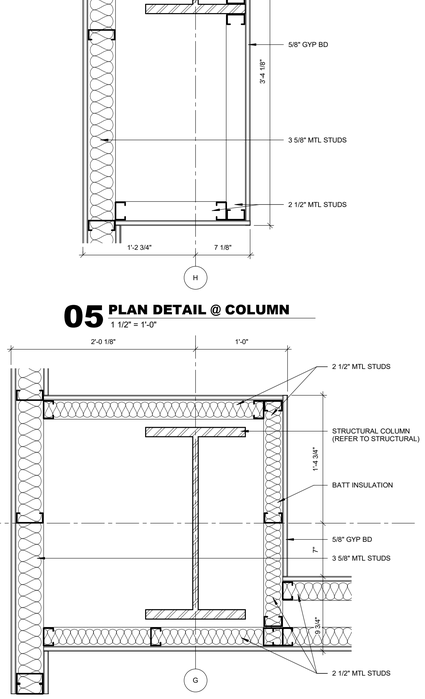

05 PLAN DETAIL @ COLUMN
1 1/2" = 1'-0"

04 PLAN DETAIL @ COLUMN
1 1/2" = 1'-0"

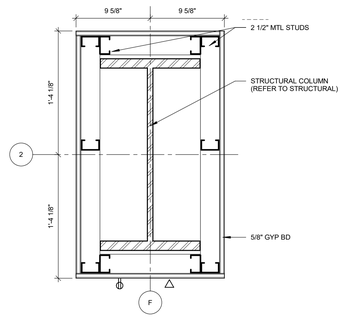

03 PLAN DETAIL @ COLUMN
1 1/2" = 1'-0"

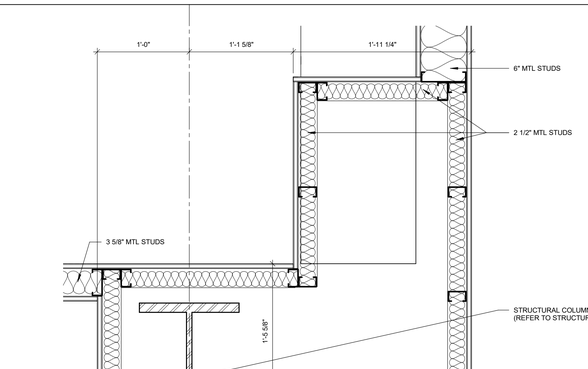

02 PLAN DETAIL @ COLUMN
1 1/2" = 1'-0"

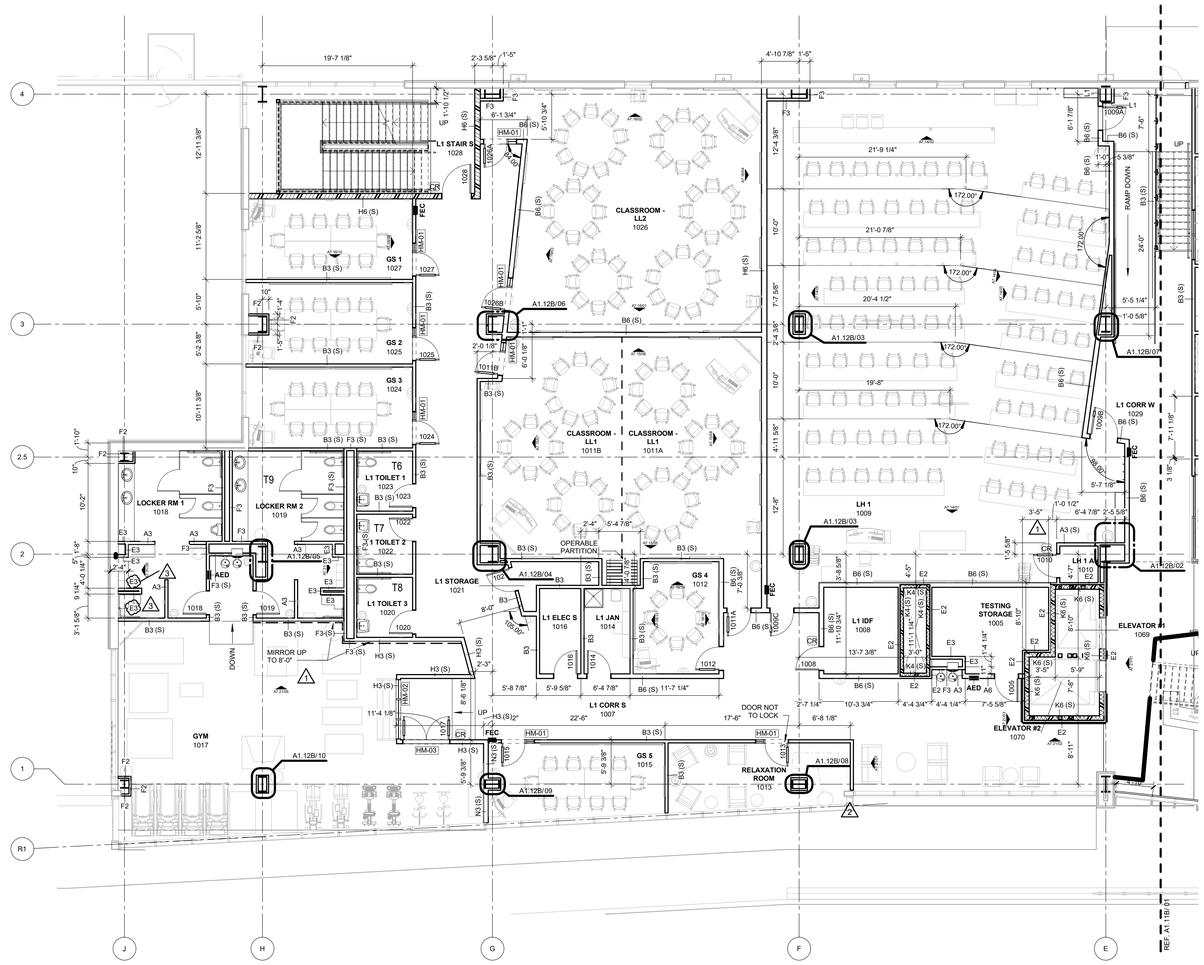

01 FLOOR PLAN LEVEL 01 SECTOR 02
1/8" = 1'-0"

PLAN NORTH

TRUE NORTH

GENERAL NOTES - FLOOR PLAN

1. ALL EXTERIOR DIMENSIONS ARE FROM FACE OF EXTERIOR STUD, U.N.O
2. ALL INTERIOR DIMENSIONS ARE FROM FACE OF FINISH WALL, U.N.O.
3. REFER TO SHEET A1.60 - A1.65 TOILET AND SHOWER PLANS / ELEVATIONS / ACCESSORIES
4. REFER TO SHEET A2.00 - A2.01 FOR PARTITION TYPES AND FRAMING DETAILS

James R. Childers Architect, Inc.
45 South 4th Street
Fort Smith, AR 72901
479-783-2480
www.childersarchitect.com

PROFESSIONAL SEAL:

STATE OF OKLAHOMA — JAMES R. CHILDERS — REGISTERED ARCHITECT

02-03-2020

CONSULTANT LOGO:

CLIENT:

THE CHEROKEE NATION — TRIBAL SEAL OF THE CHEROKEE NATION — SEPT. 6, 1839 — SEQUOYAH

College of Osteopathic Medicine
AT THE CHEROKEE NATION
TAHLEQUAH, OKLAHOMA

KEY PLAN:

PROJECT PHASE:

CONSTRUCTION DOCUMENTS

REVISIONS		
#	DATE	DESCRIPTION
1	09/09/19	ADDENDUM 01
2	12/20/19	ASI 03
3	02/03/20	ASI 05

DATE:	JOB NUMBER:
08-23-19	17-13

SHEET NUMBER:

A1.12B

FLOOR PLAN LEVEL 01 SECTOR 02

GENERAL NOTES - FLOOR PLAN

1. ALL EXTERIOR DIMENSIONS ARE FROM FACE OF EXTERIOR STUD, U.N.O
2. REFER TO SHEET A2.00 - A2.01 FOR PARTITION TYPES AND FRAMING DETAILS
3. ALL GYPSUM BOARD TO BE MOLD RESISTANT

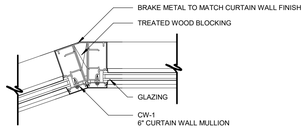

04 PLAN DETAIL
1 1/2" = 1'-0"

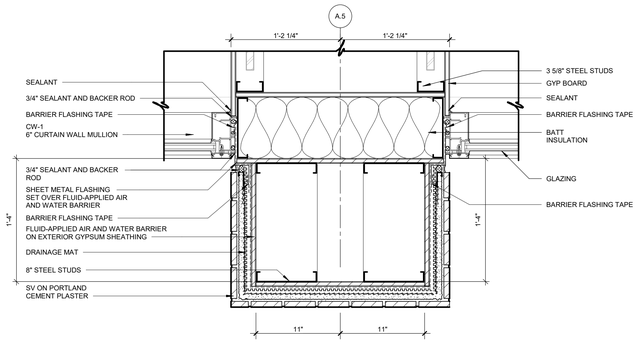

03 PLAN DETAIL
1 1/2" = 1'-0"

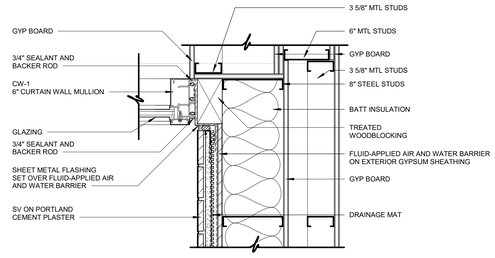

02 PLAN DETAIL
1 1/2" = 1'-0"

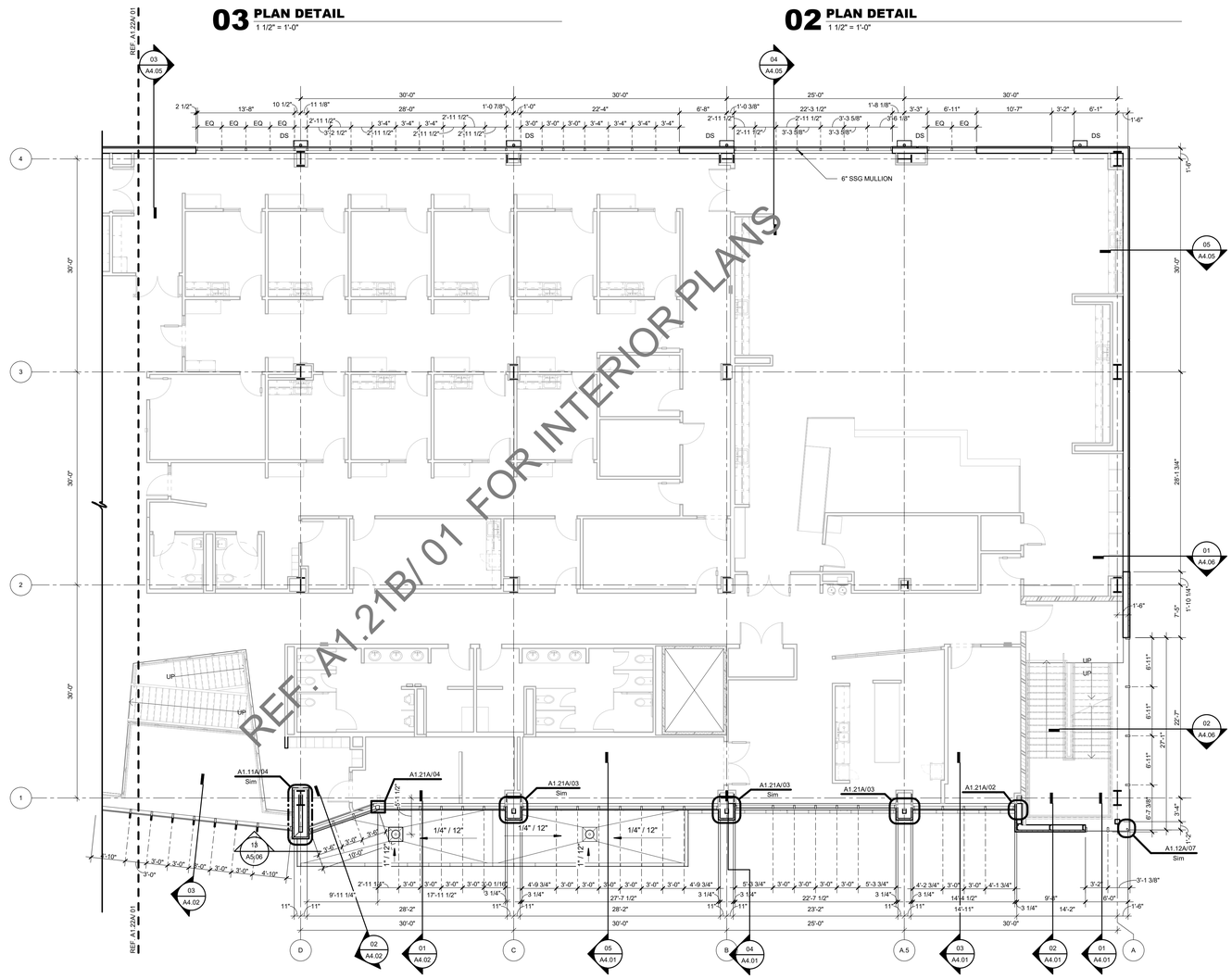

REF. A1.21B/ 01 FOR INTERIOR PLANS

PLAN NORTH

TRUE NORTH

01 FLOOR PLAN LEVEL 02 SECTOR 01 SHELL
1/8" = 1'-0"

James R. Childers Architect, Inc.
45 South 4th Street
Fort Smith, AR 72901
479-783-2480
www.childersarchitect.com

PROFESSIONAL SEAL:



08-23-2019

CONSULTANT LOGO:

CLIENT:

COLLEGE OF Osteopathic Medicine AT THE CHEROKEE NATION

TAHLEQUAH, OKLAHOMA

KEY PLAN:

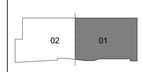

PROJECT PHASE:

CONSTRUCTION DOCUMENTS

REVISIONS		
#	DATE	DESCRIPTION

DATE:	JOB NUMBER:
08-23-19	17-13

SHEET NUMBER:

A1.21A

FLOOR PLAN LEVEL 02 SECTOR 01 SHELL

GENERAL NOTES - FLOOR PLAN

1. ALL EXTERIOR DIMENSIONS ARE FROM FACE OF EXTERIOR STUD, U.N.O
2. ALL INTERIOR DIMENSIONS ARE FROM FACE OF FINISH WALL, U.N.O.
3. REFER TO SHEET A1.60 - A1.65 TOILET AND SHOWER PLANS / ELEVATIONS / ACCESSORIES
4. REFER TO SHEET A2.00 - A2.01 FOR PARTITION TYPES AND FRAMING DETAILS

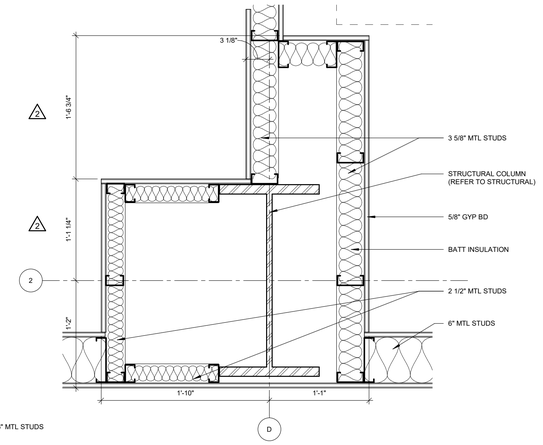

05 PLAN DETAIL @ COLUMN
1 1/2" = 1'-0"

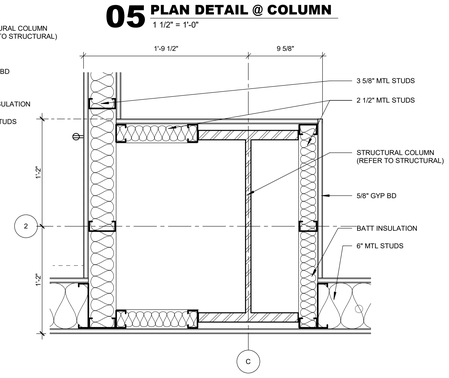

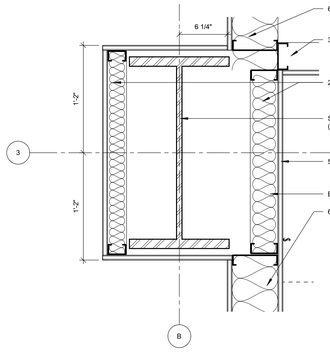

08 PLAN DETAIL @ COLUMN
1 1/2" = 1'-0"

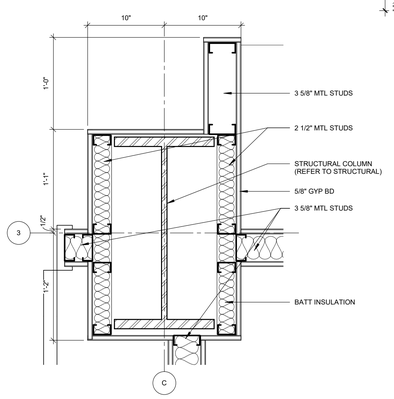

07 PLAN DETAIL @ COLUMN
1 1/2" = 1'-0"

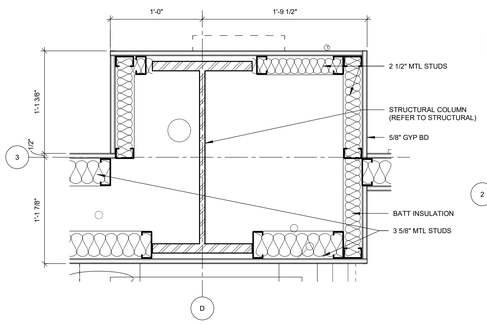

06 PLAN DETAIL @ COLUMN
1 1/2" = 1'-0"

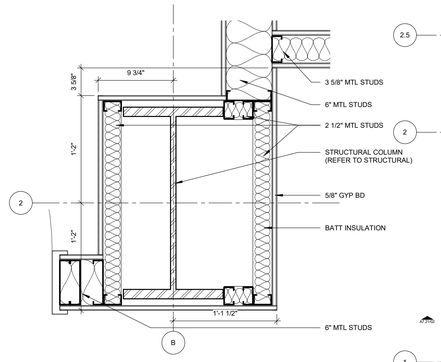

04 PLAN DETAIL @ COLUMN
1 1/2" = 1'-0"

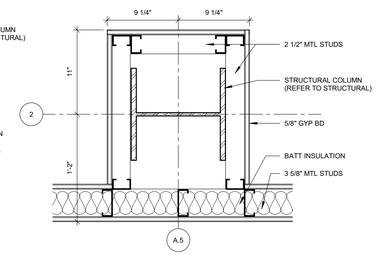

03 PLAN DETAIL @ COLUMN
1 1/2" = 1'-0"

02 PLAN DETAIL @ COLUMN
1 1/2" = 1'-0"

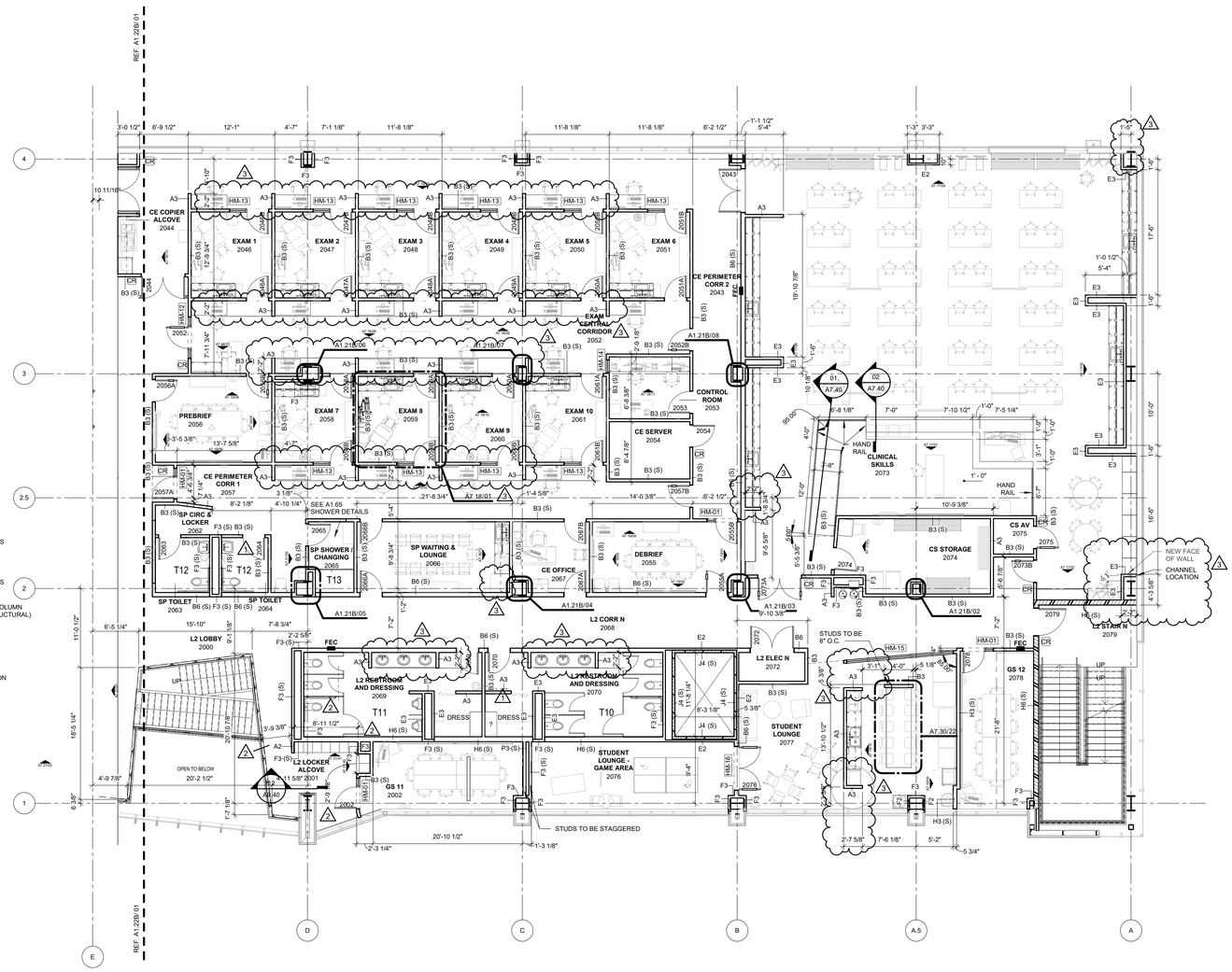

PLAN NORTH
TRUE NORTH

01 FLOOR PLAN LEVEL 02 SECTOR 01
1/8" = 1'-0"

James R. Childers Architect, Inc.
45 South 4th Street
Fort Smith, AR 72901
479-783-2480
www.childersarchitect.com

PROFESSIONAL SEAL:



02-18-2020

CONSULTANT LOGO:

CLIENT:

COLLEGE OF Osteopathic Medicine
AT THE CHEROKEE NATION
TAHLEQUAH, OKLAHOMA

KEY PLAN:

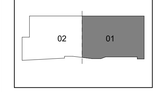

PROJECT PHASE:
CONSTRUCTION DOCUMENTS

#	DATE	DESCRIPTION
1	09/09/19	ADDENDUM 01
2	02/03/20	ASI 05
3	02/18/20	ASI 07

DATE:	JOB NUMBER:
08-23-19	17-13

SHEET NUMBER:
A1.21B

FLOOR PLAN LEVEL 02 SECTOR 01

GENERAL NOTES - FLOOR PLAN

1. ALL EXTERIOR DIMENSIONS ARE FROM FACE OF EXTERIOR STUD, U.N.O
2. REFER TO SHEET A2.00 - A2.01 FOR PARTITION TYPES AND FRAMING DETAILS
3. ALL GYPSUM BOARD TO BE MOLD RESISTANT

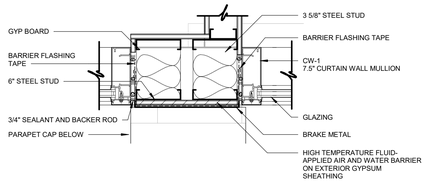

04 PLAN DETAIL
1 1/2" = 1'-0"

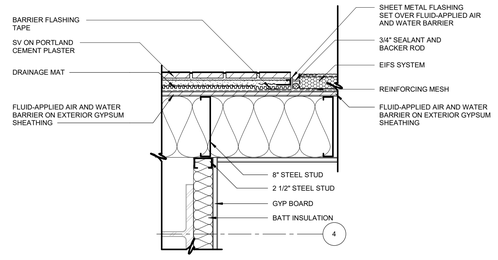

03 PLAN DETAIL
1 1/2" = 1'-0"

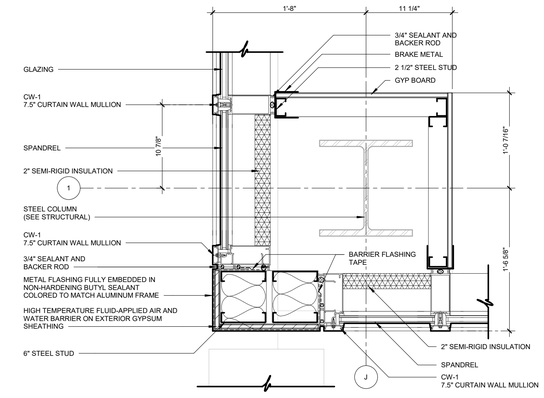

02 PLAN DETAIL
1 1/2" = 1'-0"

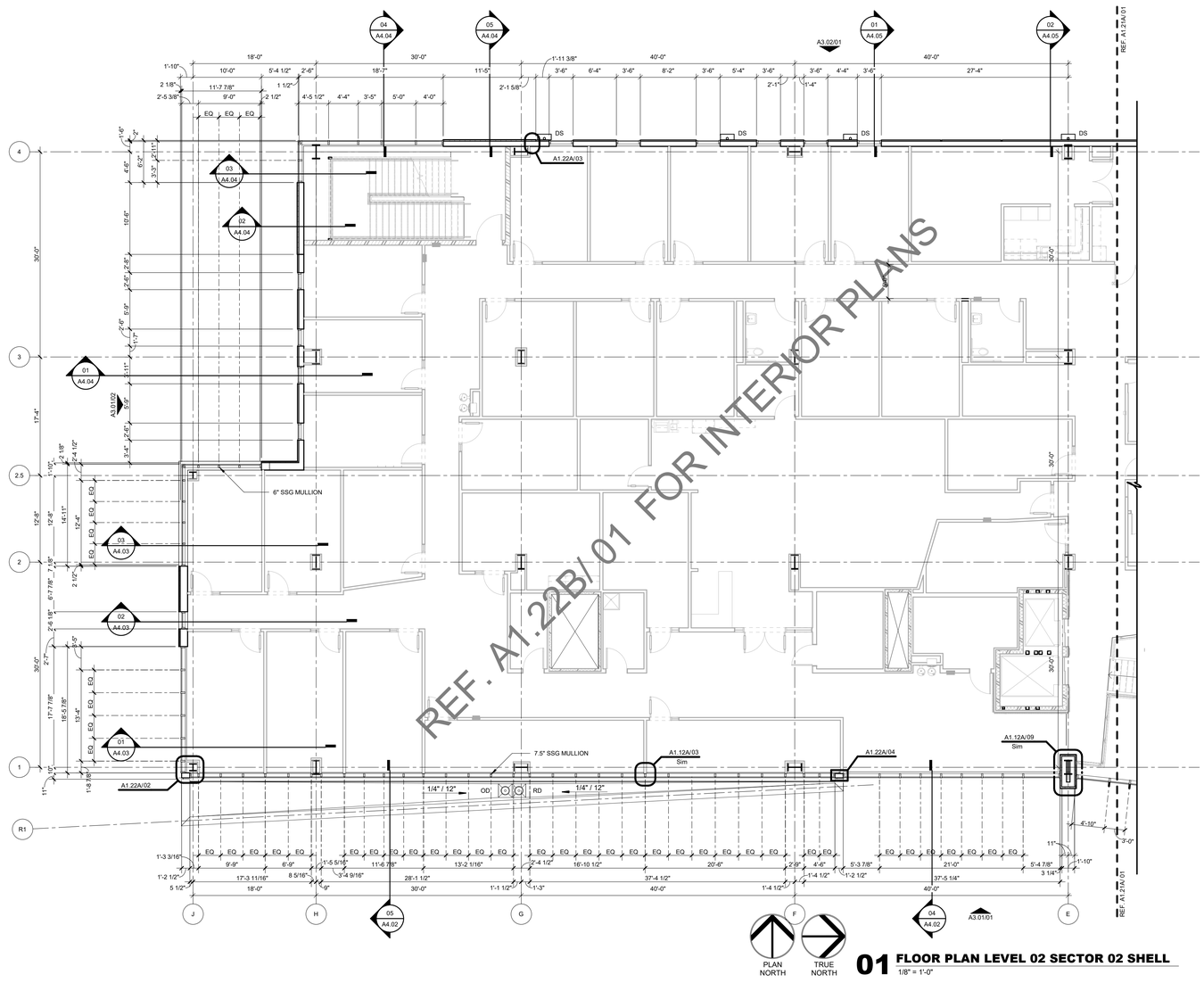

01 FLOOR PLAN LEVEL 02 SECTOR 02 SHELL
1/8" = 1'-0"

James R. Childers Architect, Inc.
45 South 4th Street
Fort Smith, AR 72901
479-783-2480
www.childersarchitect.com

PROFESSIONAL SEAL:

STATE OF OKLAHOMA
JAMES R. CHILDERS
REGISTERED ARCHITECT

08-23-2019

CONSULTANT LOGO:

CLIENT:

SEAL OF THE CHEROKEE NATION
SEPT. 6, 1839

COLLEGE OF Osteopathic Medicine
AT THE CHEROKEE NATION
TAHLEQUAH, OKLAHOMA

KEY PLAN:



PROJECT PHASE:
CONSTRUCTION DOCUMENTS

REVISIONS		
#	DATE	DESCRIPTION

DATE:	JOB NUMBER:
08-23-19	17-13

SHEET NUMBER:
A1.22A

FLOOR PLAN LEVEL 02 SECTOR 02 SHELL

GENERAL NOTES - FLOOR PLAN

1. ALL EXTERIOR DIMENSIONS ARE FROM FACE OF EXTERIOR STUD, U.N.O
2. ALL INTERIOR DIMENSIONS ARE FROM FACE OF FINISH WALL, U.N.O.
3. REFER TO SHEET A1.60 - A1.65 TOILET AND SHOWER PLANS / ELEVATIONS / ACCESSORIES
4. REFER TO SHEET A2.00 - A2.01 FOR PARTITION TYPES AND FRAMING DETAILS

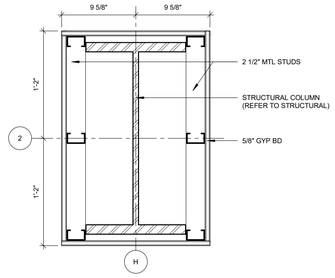

05 PLAN DETAIL @ COLUMN
1 1/2" = 1'-0"

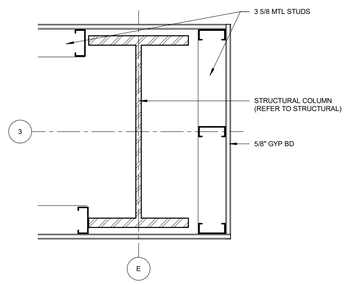

08 PLAN DETAIL @ COLUMN
1 1/2" = 1'-0"

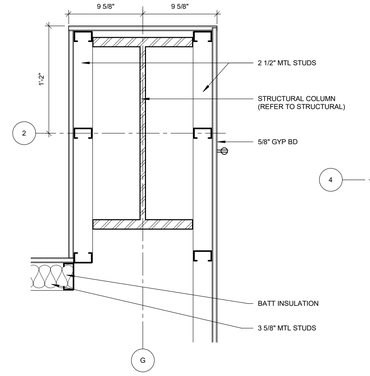

04 PLAN DETAIL @ COLUMN
1 1/2" = 1'-0"

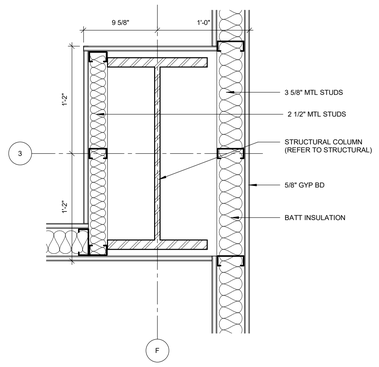

07 PLAN DETAIL @ COLUMN
1 1/2" = 1'-0"

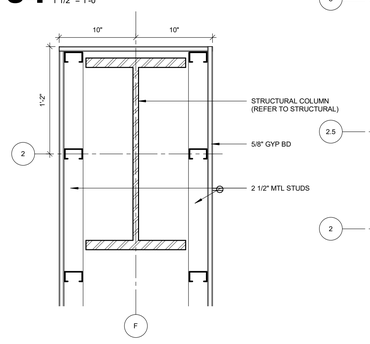

03 PLAN DETAIL @ COLUMN
1 1/2" = 1'-0"

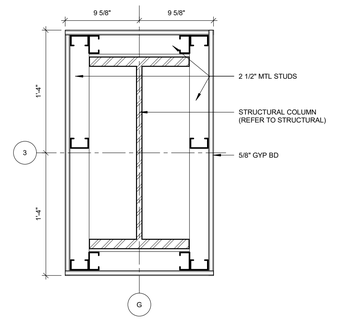

06 PLAN DETAIL @ COLUMN
1 1/2" = 1'-0"

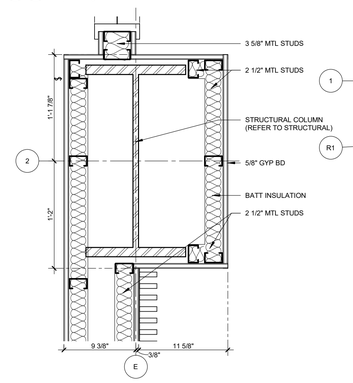

02 PLAN DETAIL @ COLUMN
1 1/2" = 1'-0"

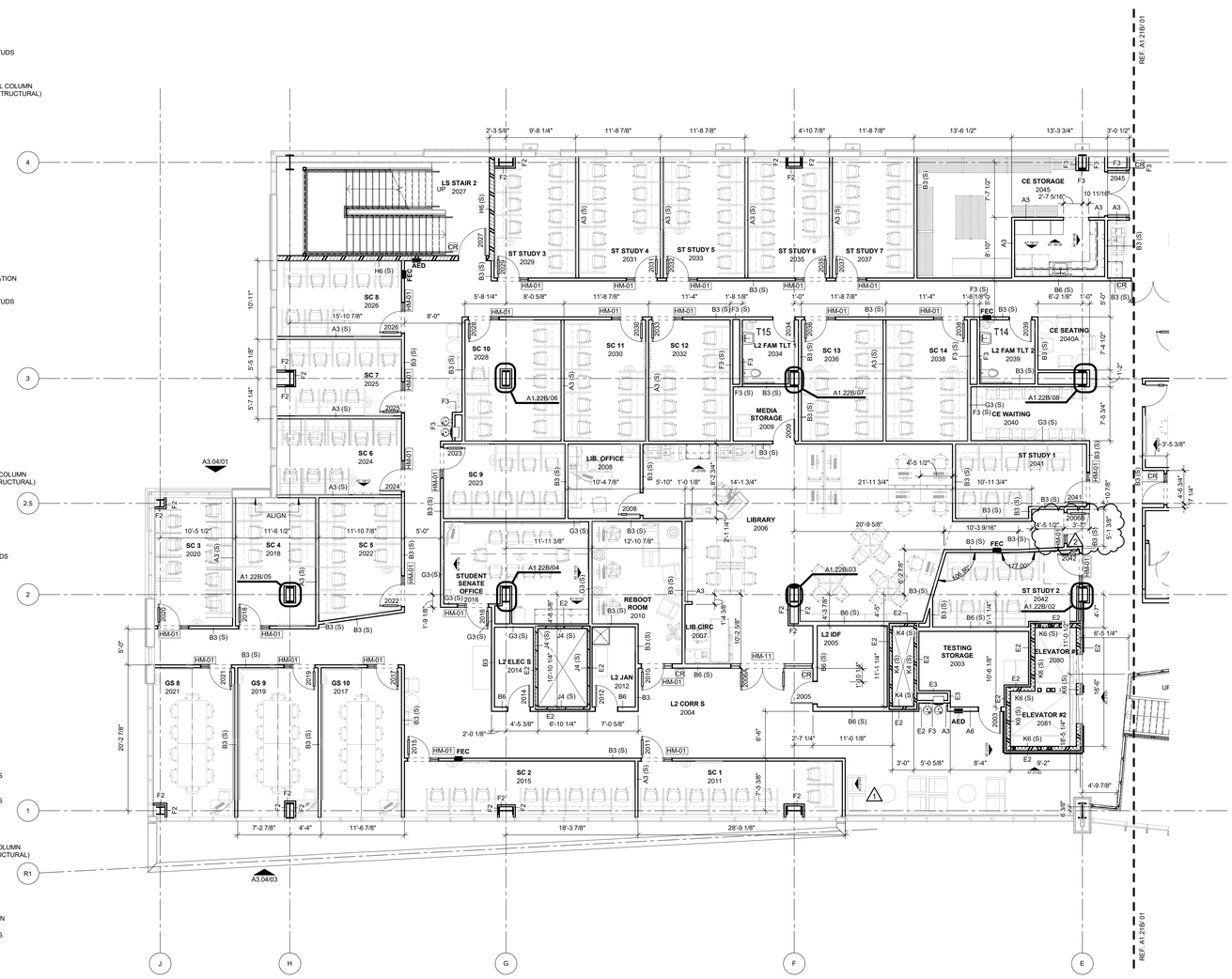

01 FLOOR PLAN LEVEL 02 SECTOR 02
1/8" = 1'-0"

PLAN NORTH

TRUE NORTH

James R. Childers Architect, Inc.
45 South 4th Street
Fort Smith, AR 72901
479-783-2480
www.childersarchitect.com

PROFESSIONAL SEAL:

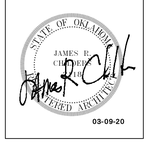

03-09-20

CONSULTANT LOGO:

CLIENT:

COLLEGE OF Osteopathic Medicine
AT THE CHEROKEE NATION
TAHLEQUAH, OKLAHOMA

KEY PLAN:

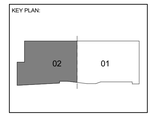

PROJECT PHASE:

CONSTRUCTION DOCUMENTS

REVISIONS		
#	DATE	DESCRIPTION
1	12/20/19	ASI 03
2	03/09/20	ASI 08

DATE: 08-23-19

JOB NUMBER: 17-13

SHEET NUMBER: A1.22B

FLOOR PLAN LEVEL 02 SECTOR 02

GENERAL NOTES - FLOOR PLAN

1. ALL EXTERIOR DIMENSIONS ARE FROM FACE OF EXTERIOR STUD, U.N.O
2. REFER TO SHEET A2.00 - A2.01 FOR PARTITION TYPES AND FRAMING DETAILS
3. ALL GYPSUM BOARD TO BE MOLD RESISTANT

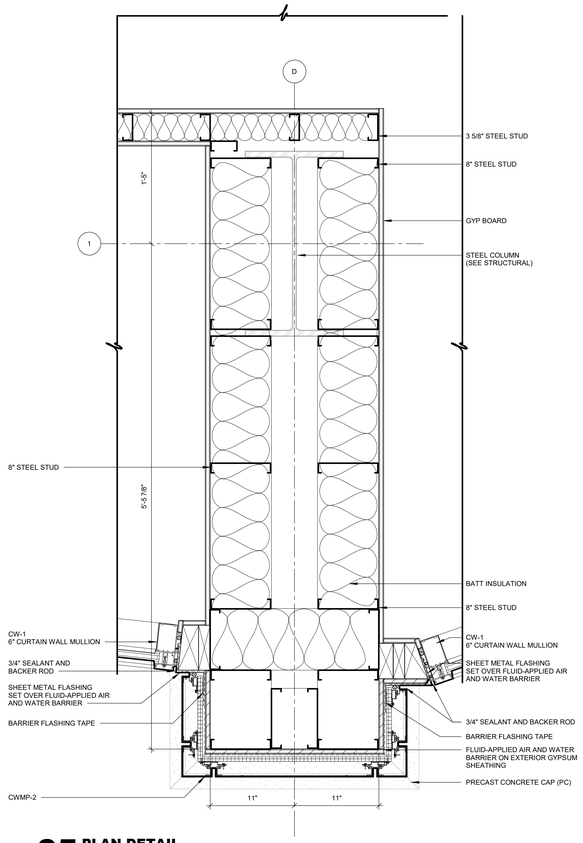

05 PLAN DETAIL
1 1/2" = 1'-0"

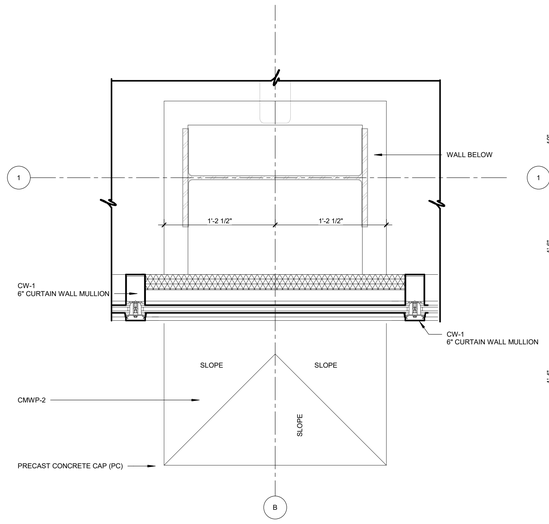

04 PLAN DETAIL
1 1/2" = 1'-0"

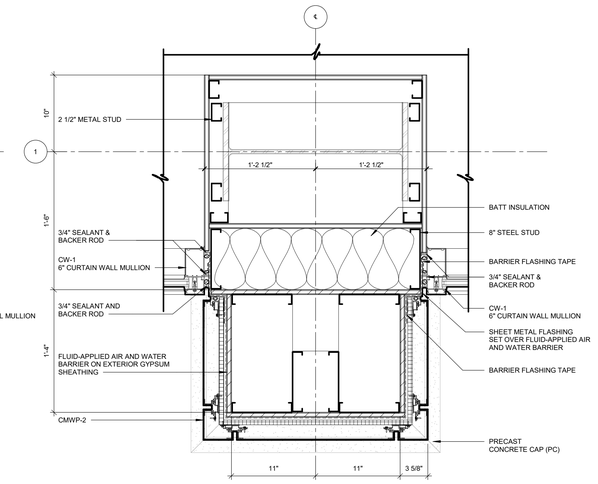

03 PLAN DETAIL
1 1/2" = 1'-0"

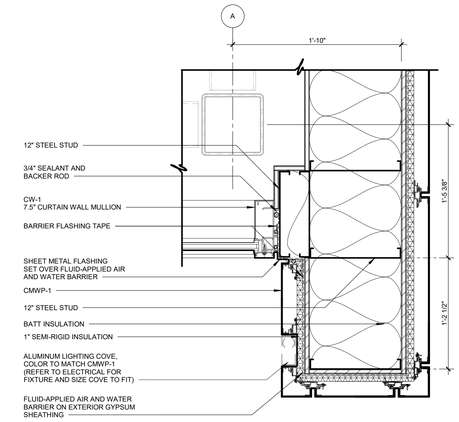

02 PLAN DETAIL
1 1/2" = 1'-0"

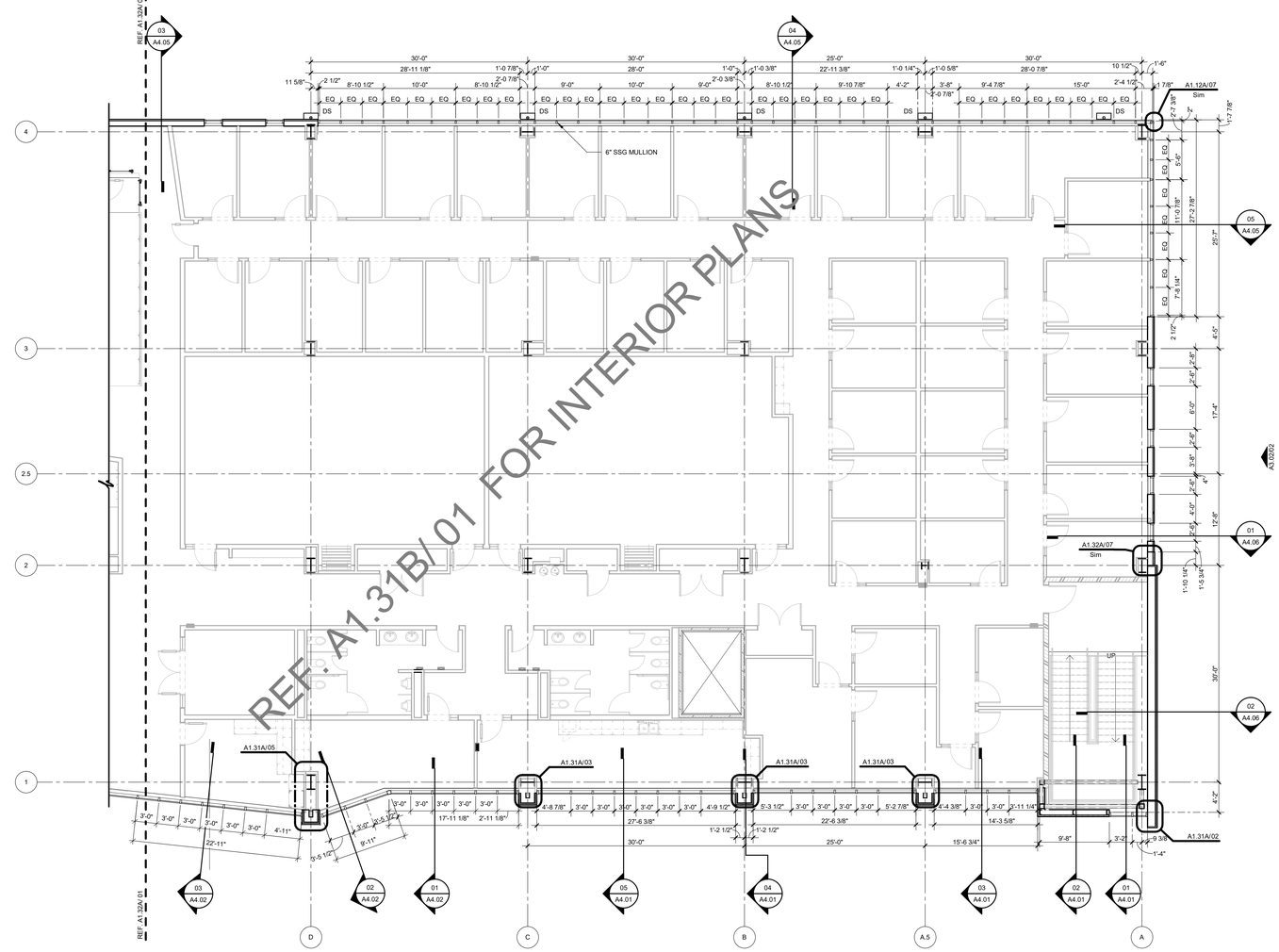

PLAN NORTH / TRUE NORTH

01 FLOOR PLAN LEVEL 03 SECTOR 01 SHELL
1/8" = 1'-0"

James R. Childers Architect, Inc.
45 South 4th Street
Fort Smith, AR 72901
479-783-2480
www.childersarchitect.com

PROFESSIONAL SEAL:

STATE OF OKLAHOMA — JAMES R. CHILDERS — REGISTERED ARCHITECT

08-23-2019

CONSULTANT LOGO:

CLIENT:

THE CHEROKEE NATION — FIRST CAPITAL — SEAL OF THE — SEPT. 6, 1839

COLLEGE OF Osteopathic Medicine
AT THE CHEROKEE NATION
TAHLEQUAH, OKLAHOMA

KEY PLAN:



PROJECT PHASE:
CONSTRUCTION DOCUMENTS

#	DATE	REVISIONS DESCRIPTION

DATE:	JOB NUMBER:
08-23-19	17-13

SHEET NUMBER:
A1.31A

FLOOR PLAN LEVEL 03 SECTOR 01 SHELL

GENERAL NOTES - FLOOR PLAN

1. ALL EXTERIOR DIMENSIONS ARE FROM FACE OF EXTERIOR STUD, U.N.O
2. ALL INTERIOR DIMENSIONS ARE FROM FACE OF FINISH WALL, U.N.O.
3. REFER TO SHEET A1.60 - A1.65 TOILET AND SHOWER PLANS / ELEVATIONS / ACCESSORIES
4. REFER TO SHEET A2.00 - A2.01 FOR PARTITION TYPES AND FRAMING DETAILS

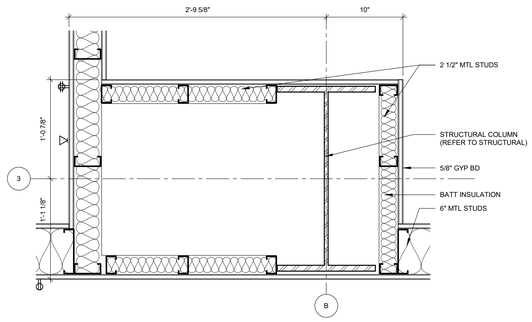

08 PLAN DETAIL @ COLUMN
1 1/2" = 1'-0"

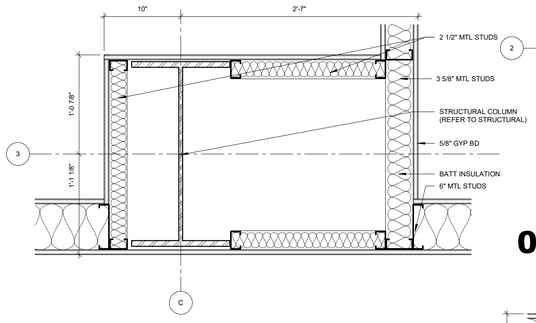

07 PLAN DETAIL @ COLUMN
1 1/2" = 1'-0"

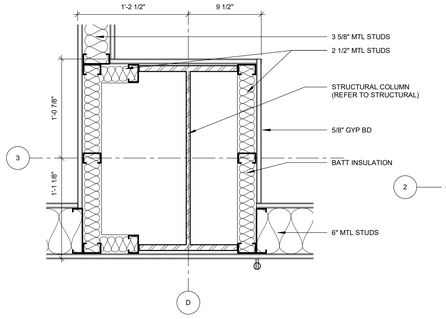

06 PLAN DETAIL @ COLUMN
1 1/2" = 1'-0"

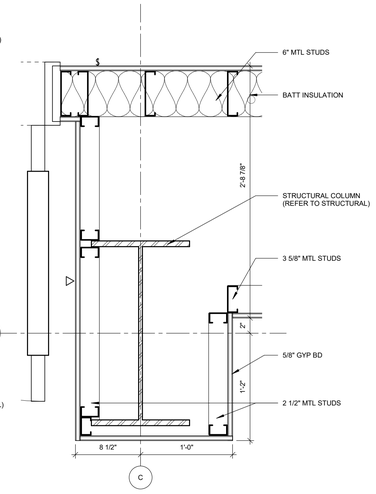

04 PLAN DETAIL @ COLUMN
1 1/2" = 1'-0"

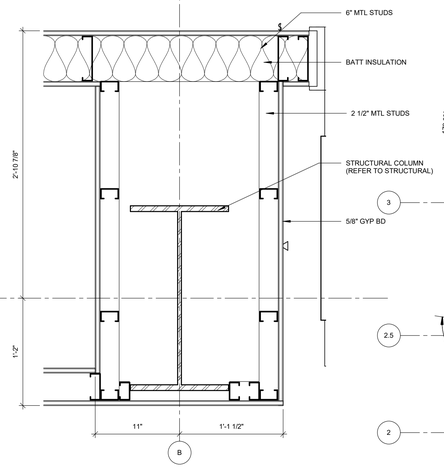

03 PLAN DETAIL @ COLUMN
1 1/2" = 1'-0"

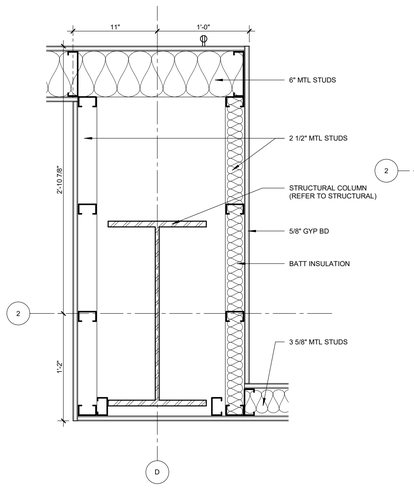

05 PLAN DETAIL @ COLUMN
1 1/2" = 1'-0"

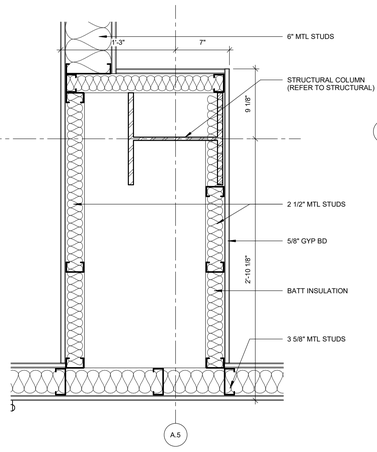

02 PLAN DETAIL @ COLUMN
1 1/2" = 1'-0"

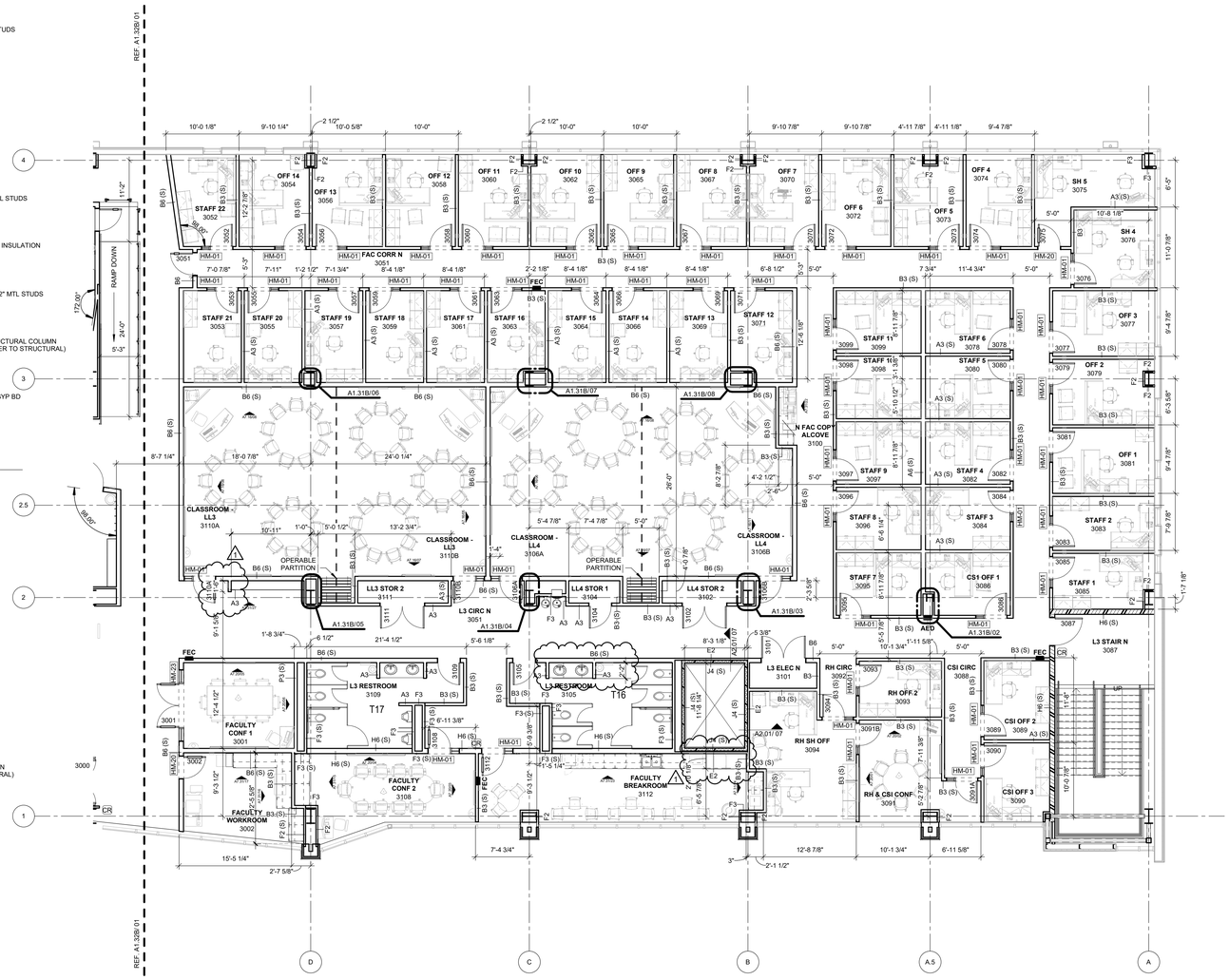

01 FLOOR PLAN LEVEL 03 SECTOR 01
1/8" = 1'-0"

PLAN NORTH

TRUE NORTH

James R. Childers Architect, Inc.
45 South 4th Street
Fort Smith, AR 72901
479-783-2480
www.childersarchitect.com

PROFESSIONAL SEAL:



CONSULTANT LOGO:

CLIENT:

COLLEGE OF Osteopathic Medicine
AT THE CHEROKEE NATION
TAHLEQUAH, OKLAHOMA

KEY PLAN:

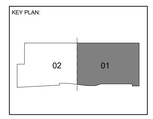

PROJECT PHASE:
CONSTRUCTION DOCUMENTS

REVISIONS		
#	DATE	DESCRIPTION
1	02/18/20	ASI 07

DATE:	JOB NUMBER:
08-23-19	17-13

SHEET NUMBER:
A1.31B

FLOOR PLAN LEVEL 03 SECTOR 01

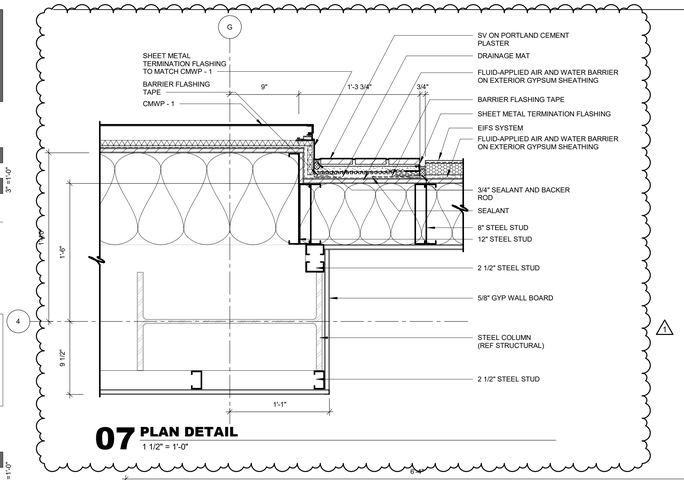

07 PLAN DETAIL
1 1/2" = 1'-0"

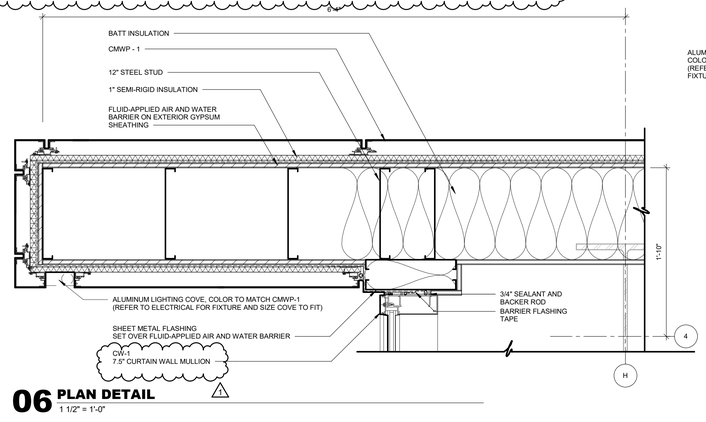

06 PLAN DETAIL
1 1/2" = 1'-0"

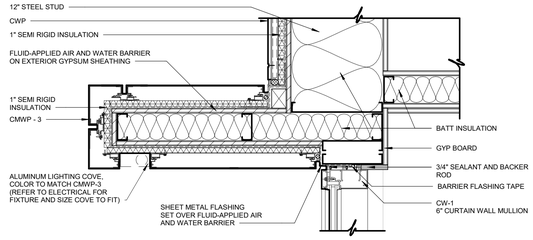

04 PLAN DETAIL
1 1/2" = 1'-0"

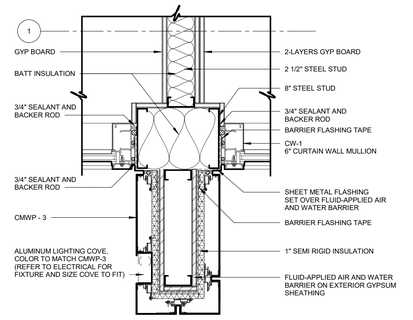

03 PLAN DETAIL
1 1/2" = 1'-0"

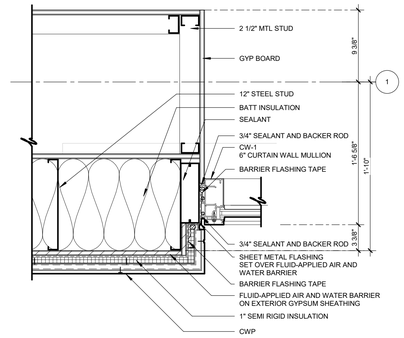

02 PLAN DETAIL
1 1/2" = 1'-0"

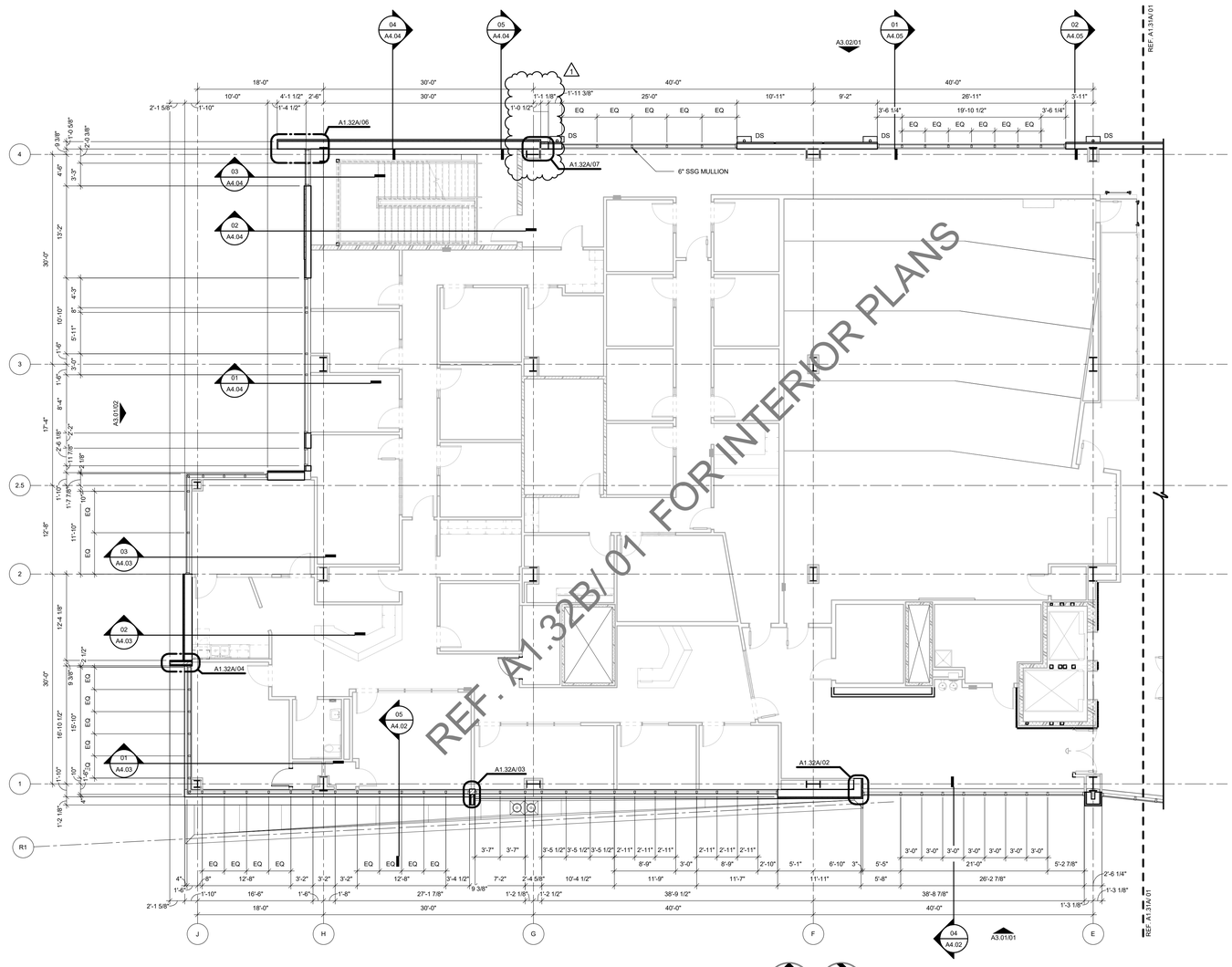

01 FLOOR PLAN LEVEL 03 SECTOR 02 SHELL
1/8" = 1'-0"

PLAN NORTH

TRUE NORTH

GENERAL NOTES - FLOOR PLAN

1. ALL EXTERIOR DIMENSIONS ARE FROM FACE OF EXTERIOR STUD, U.N.O
2. REFER TO SHEET A2.00 - A2.01 FOR PARTITION TYPES AND FRAMING DETAILS
3. ALL GYPSUM BOARD TO BE MOLD RESISTANT

James R. Childers Architect, Inc.
45 South 4th Street
Fort Smith, AR 72901
479-783-2480
www.childersarchitect.com

PROFESSIONAL SEAL:

STATE OF OKLAHOMA — JAMES R. CHILDERS — REGISTERED ARCHITECT

02-03-2020

CONSULTANT LOGO:

CLIENT:

THE CHEROKEE NATION — TRIBAL SEAT — SEPT. 6, 1839

College of Osteopathic Medicine
AT THE CHEROKEE NATION
TAHLEQUAH, OKLAHOMA

KEY PLAN:

PROJECT PHASE:

CONSTRUCTION DOCUMENTS

REVISIONS		
#	DATE	DESCRIPTION
1	02/03/20	ASI 05

DATE: 08-23-19

JOB NUMBER: 17-13

SHEET NUMBER: A1.32A

FLOOR PLAN LEVEL 03 SECTOR 02 SHELL

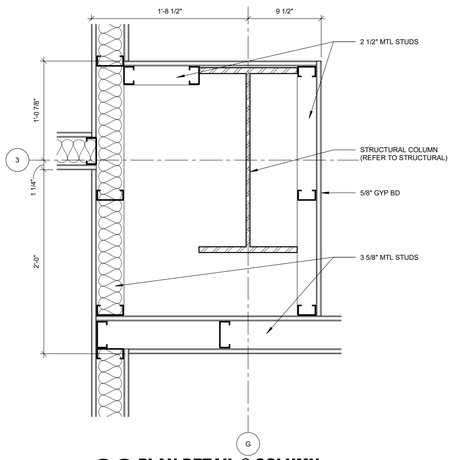

06 PLAN DETAIL @ COLUMN
1 1/2" = 1'-0"

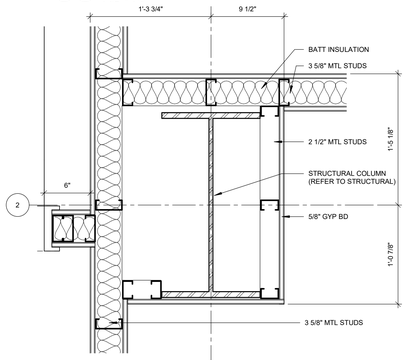

05 PLAN DETAIL @ COLUMN
1 1/2" = 1'-0"

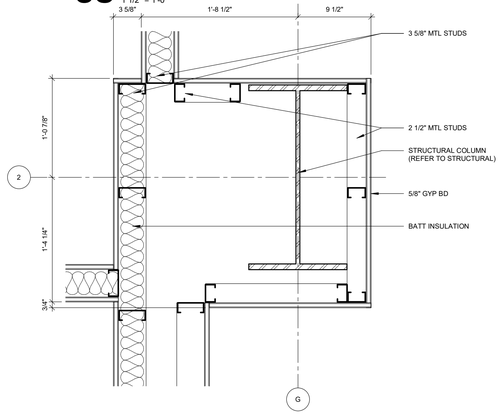

04 PLAN DETAIL @ COLUMN
1 1/2" = 1'-0"

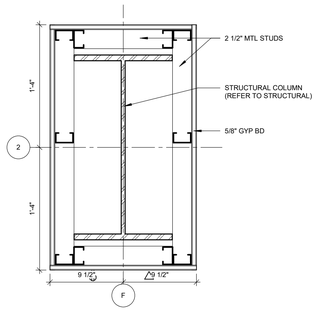

03 PLAN DETAIL @ COLUMN
1 1/2" = 1'-0"

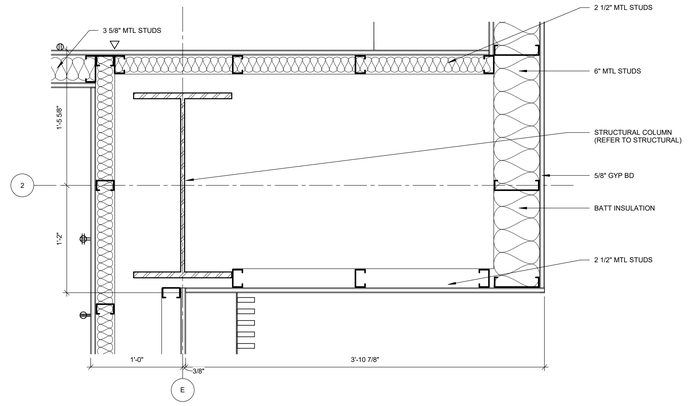

02 PLAN DETAIL @ COLUMN
1 1/2" = 1'-0"

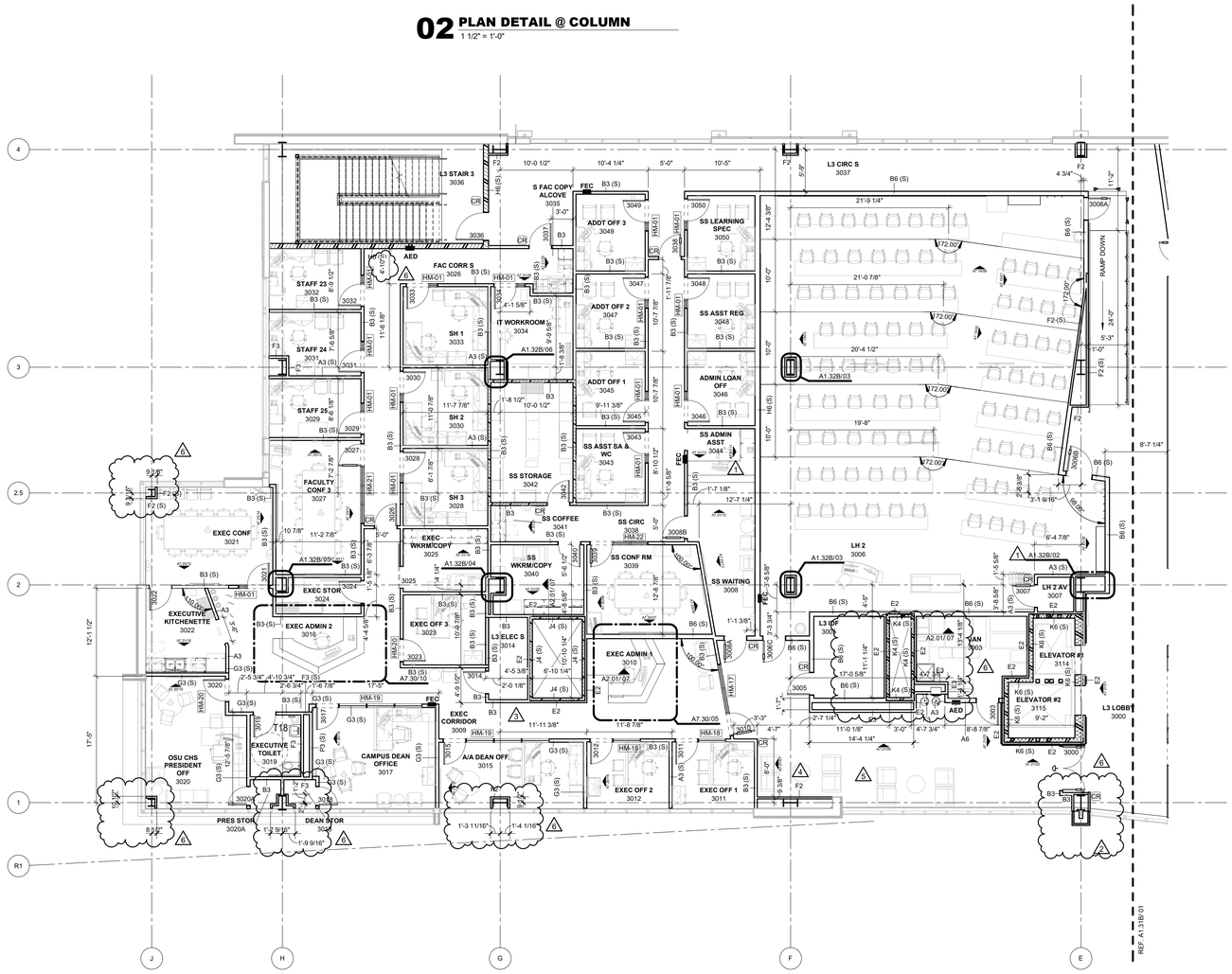

PLAN NORTH / TRUE NORTH

01 FLOOR PLAN LEVEL 03 SECTOR 02
1/8" = 1'-0"

GENERAL NOTES - FLOOR PLAN

1. ALL EXTERIOR DIMENSIONS ARE FROM FACE OF EXTERIOR STUD, U.N.O
2. ALL INTERIOR DIMENSIONS ARE FROM FACE OF FINISH WALL, U.N.O.
3. REFER TO SHEET A1.60 - A1.65 TOILET AND SHOWER PLANS / ELEVATIONS / ACCESSORIES
4. REFER TO SHEET A2.00 - A2.01 FOR PARTITION TYPES AND FRAMING DETAILS

James R. Childers Architect, Inc.
45 South 4th Street
Fort Smith, AR 72901
479-783-2480
www.childersarchitect.com

PROFESSIONAL SEAL:

STATE OF OKLAHOMA — JAMES R. CHILDERS — REGISTERED ARCHITECT

02-18-2020

CONSULTANT LOGO:

CLIENT:

THE CHEROKEE NATION — 1ST CAPITAL — SEPT. 6, 1839

COLLEGE OF Osteopathic Medicine
AT THE CHEROKEE NATION
TAHLEQUAH, OKLAHOMA

KEY PLAN:

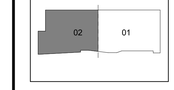

PROJECT PHASE:

CONSTRUCTION DOCUMENTS

REVISIONS		
#	DATE	DESCRIPTION
1	09/09/19	ADDENDUM 01
2	09/16/19	ADDENDUM 02
3	09/20/19	ADDENDUM 04
4	12/20/19	ASI 03
5	02/03/20	ASI 05
6	02/18/20	ASI 07

DATE: 08-23-19

JOB NUMBER: 17-13

SHEET NUMBER: A1.32B

FLOOR PLAN LEVEL 03 SECTOR 02

GENERAL NOTES - ROOF PLAN

1. ALL ROOFING SURFACES TO SLOPE 1/4" VERTICAL PER 1'-0" HORIZONTAL MINIMUM, U.N.O.
2. ALL ROOF TOP MECHANICAL, ELECTRICAL, AND/OR PLUMBING EQUIPMENT SHOWN FOR INFORMATION ONLY. REFERNCE MECHANICAL, ELECTRICAL, AND PLUMBING DOCUMENTS AND SPECIFICATIONS FOR SPECIFIC DESIGN INFORMATION.
3. PROVIDE WALKWAY PROTECTION TO MAJOR MECHANICAL, ELECTRICAL, AND PLUMBING EQUIPMENT AS REQUIRED TO PROVIDE SERVICE ACCESS. WALKWAY PROTECTION IS INDICATED AS A GENERAL LAYOUT AND MAY NOT SHOW ALL FINAL LOCATIONS OF EQUIPMENT.

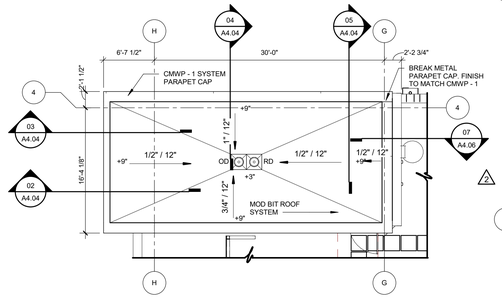

03 SOUTH STAIR TOWER ROOF
1/8" = 1'-0"

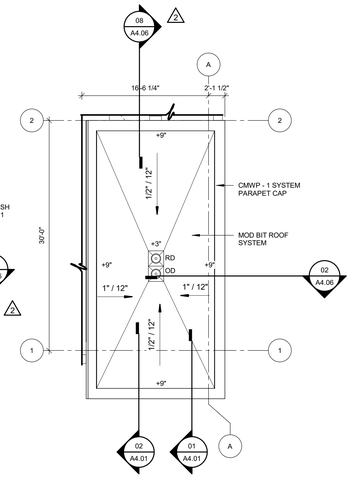

02 NORTH STAIR TOWER ROOF
1/8" = 1'-0"

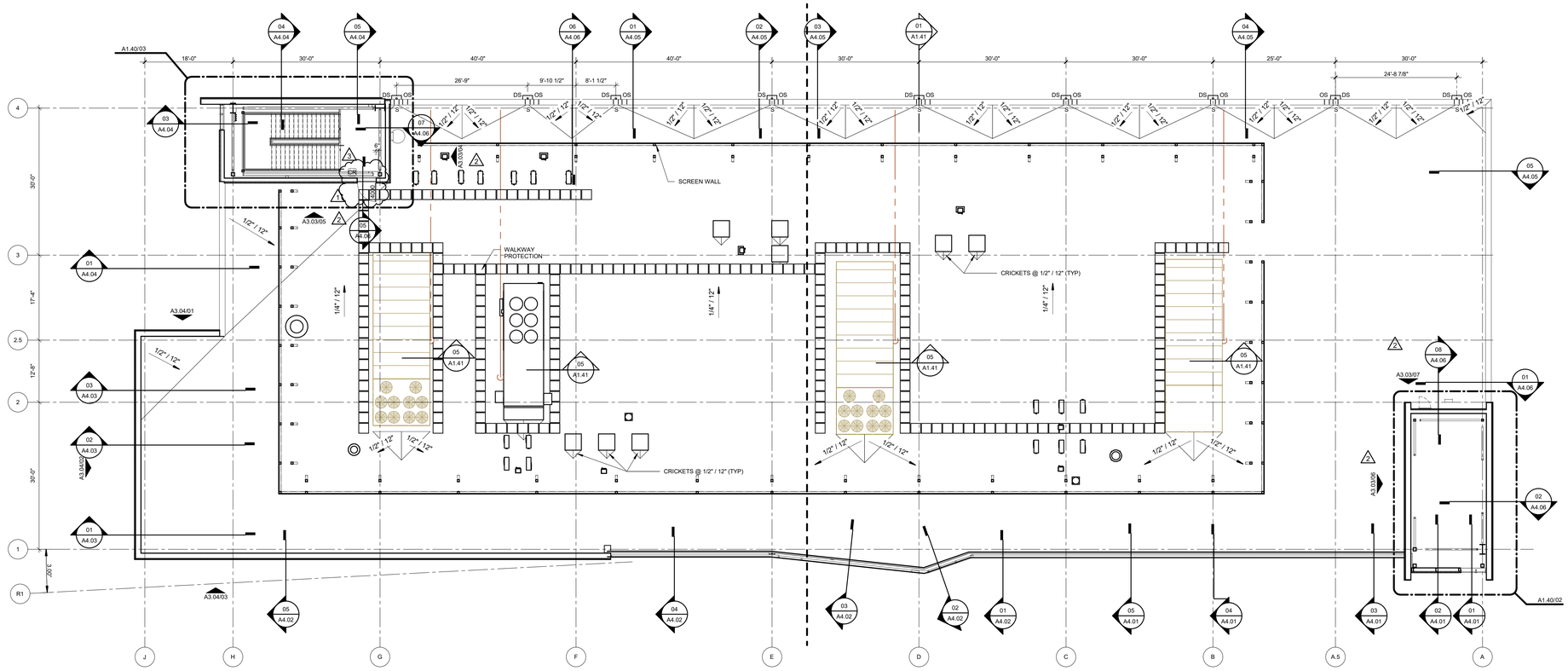

01 OVERALL ROOF PLAN
3/32" = 1'-0"

PLAN NORTH

TRUE NORTH

James R. Childers Architect, Inc.
45 South 4th Street
Fort Smith, AR 72901
479-783-2480
www.childersarchitect.com

PROFESSIONAL SEAL:

STATE OF OKLAHOMA — JAMES R. CHILDERS — REGISTERED ARCHITECT

03-09-20

CONSULTANT LOGO:

CLIENT:

THE CHEROKEE NATION — SEAL OF THE CHEROKEE NATION — SEPT. 6, 1839

College of Osteopathic Medicine

AT THE CHEROKEE NATION

TAHLEQUAH, OKLAHOMA

KEY PLAN:

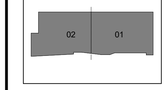

PROJECT PHASE:

CONSTRUCTION DOCUMENTS

REVISIONS		
#	DATE	DESCRIPTION
1	12/20/19	ASI 03
2	02/03/20	ASI 05
3	03/09/20	ASI 08

DATE: 08-23-19

JOB NUMBER: 17-13

SHEET NUMBER: A1.40

ROOF PLANS

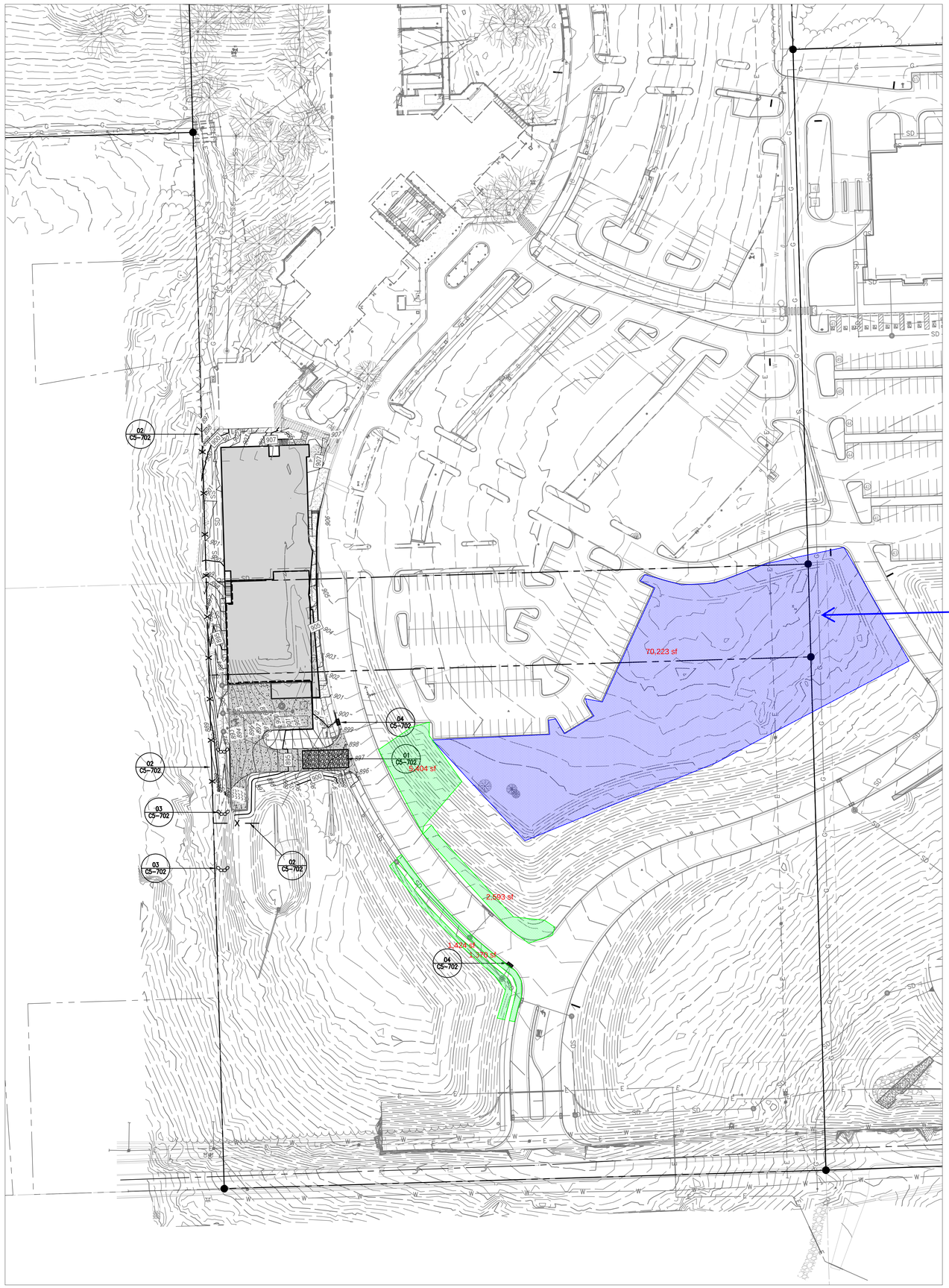

ALTERNATE 1 AREA

Areas are for approximate representation only. Contractor responsible for all quantities.

EXHIBIT A
COLLEGE OF OSTEOPATHIC MEDICINE AT THE CHEROKEE NATION
BID PHASE 8

N

0' 50' 100' 200'

SCALE: 1" = 50'

UTILITY WARNING:
THE UNDERGROUND UTILITIES SHOWN HAVE BEEN LOCATED FROM RECORD DOCUMENTS OR FIELD LOCATIONS BY THE OPERATOR. THE SURVEYOR MAKES NO GUARANTEE THAT THE UNDERGROUND UTILITIES SHOWN COMPRISE ALL SUCH UTILITIES IN THE AREA EITHER IN SERVICE OR ABANDONED. THE SURVEYOR FURTHER DOES NOT WARRANT THAT THE UNDERGROUND UTILITIES SHOWN ARE IN THE EXACT LOCATION INDICATED ALTHOUGH THE SURVEYOR DOES CERTIFY THAT THEY ARE LOCATED AS ACCURATELY AS POSSIBLE FROM THE INFORMATION AVAILABLE. THE SURVEYOR HAS NOT PHYSICALLY LOCATED THE UNDERGROUND UTILITIES.

UTILITY ELEVATIONS AND SIZES MAY HAVE BEEN MEASURED UNDER ADVERSE FIELD CONDITIONS. UPON EXPOSING THE UTILITY, ELEVATIONS AND LINE SIZES SHOULD BE VERIFIED BY THE CONTRACTOR PRIOR TO CONSTRUCTION. CONTRACTOR SHOULD VERIFY CRITICAL ELEVATIONS USING THE BENCHMARK PROVIDED BY THE SURVEYOR OR ENGINEER. ANY DISCREPANCIES SHOULD BE IMMEDIATELY BROUGHT TO THE ENGINEER'S AND SURVEYOR'S ATTENTION.

BEFORE YOU DIG
CALL OKIE
(800) 522-6543

James R. Childers Architect, Inc.
45 South 4th Street
Fort Smith, AR 72901
479-783-2480
www.childersarchitect.com

PROFESSIONAL SEAL:
REGISTERED PROFESSIONAL ENGINEER
COREY W. LIPPS
21291
OKLAHOMA
1/25/2019

Copyright © 2018 Cardinal Engineering
ALL RIGHTS RESERVED

CONSULTANT LOGO:
CARDINAL ENGINEERING
An ENVIRO-KLEAN Company
525 Central Park Drive
Suite 500
Oklahoma City, Oklahoma 73105
P: 405-842-1066 F: 405-843-4687
OKC | Norman | Tulsa | Woodward
www.cardinalengineers.com
CA# 7110, expiration date 06.30.2020

CLIENT:
THE CHEROKEE NATION
ESTD. A.D. 1839

COLLEGE OF Osteopathic Medicine
AT THE CHEROKEE NATION
TAHLEQUAH, OK

KEY PLAN:

PROJECT PHASE:
BID PACKAGE 01

REVISIONS		
#	DATE	DESCRIPTION

DATE: 01-25-19
JOB NUMBER: 17-13
SHEET NUMBER: C5-701

EROSION CONTROL PLAN

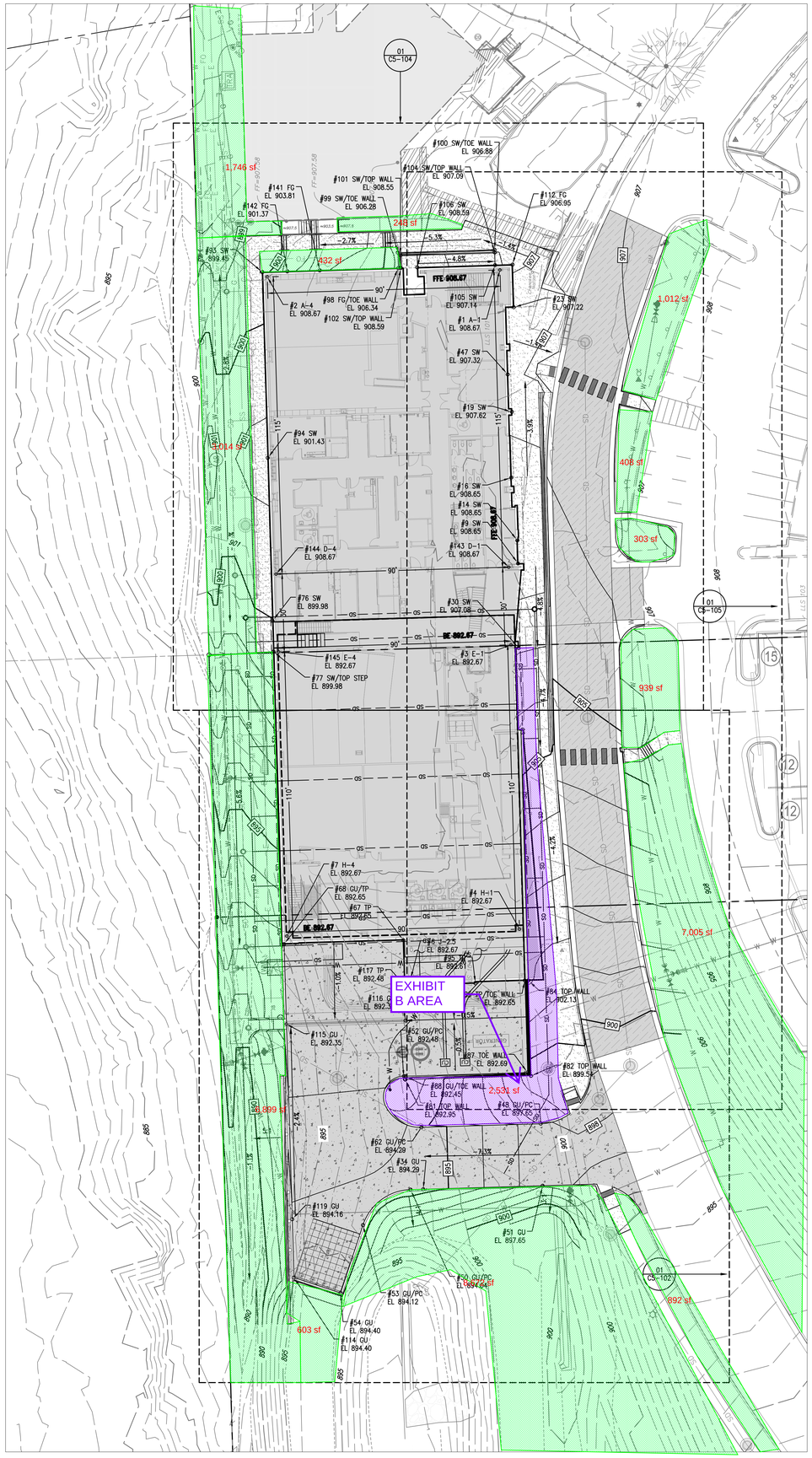

Point Table				
Point #	Elevation	Northing	Easting	Description
1	908.67	345541.68	2871335.38	A-1
2	908.67	345539.02	2871245.42	A-4
3	892.67	345396.75	2871339.67	E-1
4	892.67	345286.80	2871342.92	H-1
6	892.67	345267.54	2871300.81	J-2.5
7	892.67	345284.13	2871252.96	H-4
9	908.65	345428.17	2871342.37	SW
14	908.65	345437.09	2871342.11	SW
16	908.65	345461.36	2871339.76	SW
19	907.62	345486.80	2871339.99	SW
23	907.22	345527.25	2871340.72	SW
30	907.08	345395.50	2871342.61	SW
34	894.29	345186.20	2871305.72	GU
47	907.32	345501.28	2871338.40	SW
48	897.65	345211.56	2871351.16	GU/PC
50	894.04	345186.05	2871300.83	GU/PC
51	897.65	345187.57	2871351.87	GU
52	892.48	345229.95	2871298.14	GU/PC
53	894.12	345172.34	2871282.43	GU/PC
54	894.40	345146.10	2871273.75	GU
62	894.29	345210.19	2871305.01	GU/PC
67	892.65	345282.55	2871297.98	TP
68	892.65	345281.02	2871251.89	GU/TP
76	899.98	345406.02	2871247.47	SW
77	899.98	345394.03	2871247.82	SW/TOP STEP
81	892.95	345228.62	2871298.77	TOP WALL
82	899.54	345230.06	2871347.44	TOP WALL
84	902.13	345266.99	2871346.35	TOP WALL
85	892.65	345266.95	2871345.01	TP/TOE WALL
87	892.69	345231.35	2871346.07	TOE WALL
88	892.45	345229.95	2871298.73	GU/TOE WALL
93	899.45	345540.85	2871243.48	SW
94	901.43	345468.99	2871245.60	SW
95	892.61	345265.90	2871325.87	TP
98	906.34	345542.41	2871296.06	FG/TOE WALL
99	906.28	345548.35	2871295.88	SW/TOE WALL
100	906.88	345549.46	2871333.31	SW/TOE WALL
101	908.55	345547.38	2871296.91	SW/TOP WALL
102	908.59	345542.44	2871297.06	SW/TOP WALL
104	907.09	345548.46	2871333.34	SW/TOP WALL
105	907.14	345543.55	2871333.49	SW
106	908.59	345542.65	2871303.42	SW
112	906.95	345543.74	2871340.23	FG
114	894.40	345152.07	2871255.71	GU
115	892.35	345250.10	2871252.81	GU
116	892.35	345251.47	2871298.90	GU
117	892.48	345265.09	2871298.50	TP
119	894.16	345174.61	2871255.04	GU
141	903.81	345541.51	2871265.70	FG
142	901.37	345541.13	2871253.16	FG
143	908.67	345426.73	2871338.78	D-1
144	908.67	345424.07	2871248.82	D-4
145	892.67	345394.08	2871249.71	E-4

Areas are for approximate representation only. Contractor responsible for all quantities.

HARDSCAPE / LANDSCAPE PATTERNS

- CONCRETE SIDEWALKS
- HEAVY DUTY CONCRETE PAVING
- REINFORCED HEAVY DUTY CONCRETE PAVING
- HEAVY DUTY ASPHALT PAVING

POINT CODE ABBREVIATIONS

EG	EXISTING GRADE
FG	FINISHED GRADE
GRATE	TOP OF GRATE
GUT	GUTTER
MP	MID POINT
PC	POINT OF CURVATURE
SW	SIDEWALK
TC	TOP OF CURB
TP	TOP OF PAVING
TOE WALL	FINISHED GRADE AT TOE OF WALL
TOP WALL	FINISHED GRADE AT TOP OF WALL

EXHIBIT A
COLLEGE OF OSTEOPATHIC MEDICINE AT THE CHEROKEE NATION
BID PHASE 8

UTILITY WARNING:
THE UNDERGROUND UTILITIES SHOWN HAVE BEEN LOCATED FROM RECORD DOCUMENTS OR FIELD LOCATIONS BY THE OPERATOR. THE SURVEYOR MAKES NO GUARANTEE THAT THE UNDERGROUND UTILITIES SHOWN COMPRISE ALL SUCH UTILITIES IN THE AREA EITHER IN SERVICE OR ABANDONED. THE SURVEYOR FURTHER DOES NOT WARRANT THAT THE UNDERGROUND UTILITIES SHOWN ARE IN THE EXACT LOCATION INDICATED ALTHOUGH THE SURVEYOR DOES CERTIFY THAT THEY ARE LOCATED AS ACCURATELY AS POSSIBLE FROM THE INFORMATION AVAILABLE. THE SURVEYOR HAS NOT PHYSICALLY LOCATED THE UNDERGROUND UTILITIES.

UTILITY ELEVATIONS AND SIZES MAY HAVE BEEN MEASURED UNDER ADVERSE FIELD CONDITIONS. UPON EXPOSING THE UTILITY, ELEVATIONS AND LINE SIZES SHOULD BE VERIFIED BY THE CONTRACTOR PRIOR TO CONSTRUCTION. CONTRACTOR SHOULD VERIFY CRITICAL ELEVATIONS USING THE BENCHMARK PROVIDED BY THE SURVEYOR OR ENGINEER. ANY DISCREPANCIES SHOULD BE IMMEDIATELY BROUGHT TO THE ENGINEER'S AND SURVEYOR'S ATTENTION.

BEFORE YOU DIG
CALL OKIE
(800) 522-6543

0' 20' 40' 80'
SCALE: 1" = 20'

James R. Childers Architect, Inc.
45 South 4th Street
Fort Smith, AR 72901
479-783-2480
www.childersarchitect.com

PROFESSIONAL SEAL:
REGISTERED PROFESSIONAL ENGINEER
COREY W. LIPPS
21291
5/24/19

Copyright © 2019 Cardinal Engineering
Unauthorized use prohibited

CONSULTANT LOGO:
CARDINAL ENGINEERING
An ENVIRONCLEAN Company
525 Central Park Drive
Suite 500
Oklahoma City, Oklahoma 73105
P: 405-842-1066 F: 405-843-4687
OKC | Norman | Tulsa | Woodward
www.cardinalengineers.com
CA# 7110, expiration date 06.30.2020

CLIENT:
THE CHEROKEE NATION
EST. 1839
REPT. & LIVE

College of Osteopathic Medicine
AT THE CHEROKEE NATION
TAHLEQUAH, OK

KEY PLAN:

PROJECT PHASE:
BID PACKAGE 02

REVISIONS		
#	DATE	DESCRIPTION
1	04/16/19	ASI 01
2	05/24/19	BID PACKAGE 02 ASI 02

DATE: 02-08-19
JOB NUMBER: 17-13
SHEET NUMBER: C5-101
GRADING PLAN

EXHIBIT B
COLLEGE OF OSTEOPATHIC MEDICINE AT THE CHEROKEE NATION
BID PHASE 8

THESE PLANTINGS ARE TO BE BY OWNER AND ARE FOR REFERENCE ONLY.

