Project Manual

ASI No. 08 to Construction Document
Volume 01

COLLEGE OF
Osteopathic Medicine
AT THE CHEROKEE NATION

Tahlequah, Oklahoma

March 09, 2020

CHILDERS ARCHITECT | HKS

Tel: 479.783.2480 Fax: 479.783.4844 E-mail: breck@childersarchitect.com Web: www.childersarchitect.com

Project Manual

Addendum No. 02 to Construction Document
Volume 02

COLLEGE OF
Osteopathic Medicine
AT THE CHEROKEE NATION

Tahlequah, Oklahoma

September 16, 2019

CHILDERS ARCHITECT | HKS

Tel: 479.783.2480 Fax: 479.783.4844 E-mail: breck@childersarchitect.com Web: www.childersarchitect.com

TABLE OF CONTENTS

LEGEND

First Column:	Current Date for Section
Second Column:	Checked Indicates Section is Included in Current Issue
Third Column:	Section Number
Fourth Column:	Section Title
Fifth Column:	Section Author



03.09.2020

ISSUES

Bid Package 01, Demolition	**2019-01-18**	
Addendum No. 01 (to bid pack 01)	**2019-02-08**	
Bid Package No. 02, Rough Grading	**2019-02-08**	
Bid Package No. 03, Foundation	**2019-03-20**	
Bid Package No. 04, Underground Utilities-Steel	**2019-05-10**	
Construction Document	**2019-08-23**	**Issued for Construction**
Add. No. 01 to Const. Doc.	**2019-09-09**	
Add. No. 02 to Const. Doc.	**2019-09-16**	**MEP only**
Add. No. 03 to Const. Doc.	**2019-09-18**	**Drawings only, no Specs issued.**
Add. No. 04 to Const. Doc.	**2019-20-18**	
ASI No. 08 to Const. Doc.	**2020-03-09**	

NOTE FOR REVISED SPECIFICATION SECTIONS

1. DELETED INFORMATION IS INDICATED BY A STRIKETHROUGH (IE, ~~THIS IS DELETED~~).
2. NEW INFORMATION IS INDICATED BY A DOUBLE UNDERLINE (IE, THIS IS ADDED).
3. ALL REVISED INFORMATION IS FURTHER IDENTIFIED BY A HEAVY VERTICAL LINE TO THE RIGHT OF ALL REVISIONS IN EACH INDIVIDUAL SPECIFICATION SECTION (REFER TO HEAVY BOLD LINE TO THE RIGHT FOR AN EXAMPLE).

V O L U M E 1

DIVISION 00 - PROCUREMENT AND CONTRACTING REQUIREMENTS

	☐	00 1115	Invitation to Bid
	☐	00 2113	Instructions to Bidders
2019-02-08	☐	00 3100	Available Project Information
	☐	00 4100	Bid Form
	☐	00 5200	Agreement Form
	☐	00 6100	Bonds
2019-02-08	☐	00 7200	General Conditions
	☐	00 7300	Supplementary Conditions

DIVISION 01 - GENERAL REQUIREMENTS

	☐	01 0500	Design Selections
	☐	01 0510	Exterior Design Selections
	☐	01 0520	Interior Design Selections
	☐	01 1000	Summary
	☐	01 2100	Allowances
2019-02-08	☐	01 2200	Unit Prices
2019-02-08	☐	01 2300	Alternates
2019-02-08	☐	01 2500	Substitution Procedures
2019-02-08	☐	01 2500a	Substitution Procedures Form
2019-02-08	☐	01 2600	Contract Modification Procedures
2019-02-08	☐	01 2900	Payment Procedures
2019-02-08	☐	01 3100	Project Management and Coordination
2019-02-08	☐	01 3200	Construction Progress Documentation
	☐	01 3233	Photographic Documentation
2019-02-08	☐	01 3300	Submittal Procedures
2019-02-08	☐	01 4000	Quality Requirements
	☐	01 4200	References
2019-02-08	☐	01 4323	Special Inspection
2019-02-08	☐	01 4339	Visual Mock-Up Requirements
2019-02-08	☐	01 4516	Field Test for Water Leakage
	☐	01 4540	Testing Mock-Up for Building Enclosure Systems
2019-02-08	☐	01 5000	Temporary Facilities and Controls
2019-02-08	☐	01 6000	Product Requirements
2019-02-08	☐	01 7300	Execution
2019-02-08	☐	01 7419	Construction Waste Management and Disposal
	☐	01 7420	LEED Construction Waste Management and Disposal
2019-02-08	☐	01 7700	Closeout Procedures
2019-02-08	☐	01 7823	Operations and Maintenance Data
2019-02-08	☐	01 7839	Project Record Documents
2019-02-08	☐	01 7900	Demonstration and Training
	☐	01 7910	Demonstration and Training
~~2019-02-08~~	☐	~~01 8111~~	~~Sustainable Construction Requirements~~ This section is being deleted.
	☐	01 8112	LEED Construction Requirements
	☐	01 8113	LEED Construction Requirements for New Construction and Major Renovations
	☐	01 8123	LEED Construction Requirements for Commercial Interiors
	☐	01 8133	LEED Construction Requirements for Core and Shell Development
	☐	01 8143	LEED Construction Requirements for Schools
2019-02-08	☐	01 9113	General Commissioning Requirements

DIVISION 02 - EXISTING CONDITIONS

	☐	02 1113	Selective Site Demolition
		02 1116	Building Demolition

2019-01-18	☐	02 4113	Selective Site Demolition
	☐	02 4119	Selective Demolition

DIVISION 03 - CONCRETE

	☐	03 0150	Concrete Patching
2019-03-20	☐	03 1000	Concrete Forming and Accessories
	☐	03 1100	Concrete Forming
	☐	03 1500	Concrete Accessories
2019-03-20	☐	03 2000	Concrete Reinforcing
2019-03-20	☐	03 3000	Cast-In-Place Concrete
2019-08-23	☐	03 3500	Concrete Finishing
	☐	03 3600	Special Concrete Finishes
	☐	03 3800	Post-Tensioned Concrete
	☐	03 4100	Plant-Precast Structural Concrete
2019-09-09	☐	03 4500	Architectural Precast Concrete
	☐	03 4713	Tilt-Up Concrete
	☐	03 4900	Glass-Fiber Reinforced Precast Concrete (GFRC)
	☐	03 5216	Lightweight Insulating Concrete
	☐	03 5300	Concrete Toppings
	☐	03 5416	Hydraulic Cement Underlayment

DIVISION 04 - MASONRY

	☐	04 2100	Masonry Veneer
2019-03-20	☐	04 2200	Concrete Unit Masonry
	☐	04 2300	Glass Unit Masonry
	☐	04 4200	Exterior Stone Cladding
	☐	04 4216	Steel Supported Stone Cladding
	☐	04 7200	Cast Stone Masonry
2019-08-23	☐	04 7500	Adhered Masonry Veneer

DIVISION 05 – METALS

2019-04-19	☐	05 1000	Structural Steel
	☐	05 1200	Structural Steel Framing
2019-04-14	☐	05 1213	Architecturally Exposed Structural Steel (AESS) Framing
	☐	05 1636	Barrier Cables
	☐	05 2100	Steel Joists Framing
2019-04-19	☐	053000	Metal Decking
	☐	05 3100	Steel Decking
	☐	05 3123	Steel Roof Deck System
	☐	05 3133	Permanent Metal Forming
2019-08-23	☐	05 4000	Cold-Formed Steel Framing
2019-08-23	☐	05 4300	Slotted Channel Framing
2019-08-23	☐	05 5000	Metal Fabrications
2019-05-10	☐	05 5100	Metal Stairs

2019-08-23	☐	05 5213	Pipe and Tube Railings
	☐	05 5813	Ornamental Metal Column Covers
2019-05-10	☐	05 6000	Metal Equipment Support System
2019-08-23	☐	05 7000	Ornamental Metal
2019-08-23	☐	05 7300	Ornamental Handrails and Railings

DIVISION 06 - WOOD, PLASTICS, AND COMPOSITES

2019-08-23	☐	06 1053	Miscellaneous Rough Carpentry
2019-08-23	☐	06 1643	Exterior Gypsum Sheathing
2019-08-23	☐	06 4023	Interior Architectural Woodwork
	☐	06 4223	Slatwall Paneling
	☐	06 6100	Simulated Stone Fabrications
	☐	06 6413	Translucent Resin Panel Fabrications
	☐	06 6419	Simulated Stone Paneling
	☐	06 6713	Louvered Light Diffusers
	☐	06 6813	Plastic Gratings

DIVISION 07 - THERMAL AND MOISTURE PROTECTION

	☐	07 0151	Preparation for Re-Roofing
	☐	07 0152	Patching of Existing Roofing
	☐	07 1114	Asphalt Mastic Dampproofing
	☐	07 1328	Pre-Applied Sheet Waterproofing
	☐	07 1352	Modified Bituminous Sheet Waterproofing
	☐	07 1413	Hot Fluid-Applied Rubberized Asphalt Waterproofing
	☐	07 1416	Cold Fluid Applied Waterproofing
2019-08-23	☐	07 1616	Crystalline Waterproofing
	☐	07 1700	Bentonite Waterproofing
2019-08-23	☐	07 1800	Traffic Coatings
2019-08-23	☐	07 1900	Water Repellents
	☐	07 2100	Thermal Insulation
2019-08-23	☐	07 2119	Spray-Applied Foam Insulation
2019-08-23	☐	07 2400	EIFS
	☐	07 2423	DEFS for Soffits
	☐	07 2500	Mechanically Fastened Air and Water Barriers
2019-03-20	☐	07 2600	Under-Slab Vapor Retarder
	☐	07 2613	Rubberized Asphalt Vapor Retarders
	☐	07 2617	Below Slab Vapor Retarders
2019-08-23	☐	07 2713	Self-Adhering Air and Water Barriers
2019-08-23	☐	07 2726	Fluid-Applied Air and Water barriers
	☐	07 3113	Asphalt Shingles
	☐	07 3127	Simulated Slate Roofing
	☐	07 3200	Roof Tiles
	☐	07 4114	Metal Roof Panels

2019-08-23	☐	07 4213	Formed Metal Wall Panels
	☐	07 4216	Modular Metal Wall Panels
	☐	07 4229	Terra Cotta Wall Panels
2019-08-23	☐	07 4243	Composite Metal Wall Panels
2019-08-23	☐	07 4244	Composite Wood Wall Panels
2019-08-23	☐	07 4623	Cedar Soffit Siding
2019-08-23	☐	07 4800	Rainscreen Attachment System
2019-08-23	☐	07 5013	Single-Ply Membrane Roofing
2019-08-23	☐	07 5216	Modified Bituminous Membrane Roofing
	☐	07 5556	Fluid-Applied Protected Membrane Roofing
	☐	07 5563	Vegetated Protected Membrane Roofing
2019-09-09	☐	07 6200	Flashing and Sheet Metal
2019-09-09	☐	07 7200	Roof Accessories
	☐	07 7600	Roof Pavers and Pedestal Assemblies
2019-08-23	☐	07 8116	Cementitious Fireproofing
	☐	07 8123	Intumescent Mastic Fireproofing
2019-08-23	☐	07 8413	Penetration Firestopping
2019-08-23	☐	07 8446	Fire-Resistive Joint Firestopping
	☐	07 9100	Preformed Joint Seals
2019-08-23	☐	07 9200	Joint Sealants
	☐	07 9500	Expansion Control

DIVISION 08 - OPENINGS

	☐	08 0610	Door Schedule
2019-08-23	☐	08 1113	Hollow Metal Doors and Frames
	☐	08 1114	Interior Hollow Metal Frames
	☐	08 1170	Steel Fire Door and Frame Assembly
2019-08-23	☐	08 1216	Interior Aluminum Frames
2019-08-23	☐	08 1416	Prefinished Flush Wood Doors
	☐	08 1433	Stile and Rail Wood Doors
2019-08-23	☐	08 3113	Access Doors and Frames
	☐	08 3313	Coiling Counter Doors
	☐	08 3323	Overhead Coiling Doors
	☐	08 3326	Overhead Coiling Grilles
	☐	08 3338	Interior Side Coiling Grilles
2019-08-23	☐	08 3400	Special – Function Doors
	☐	08 3470	Acoustical Metal Door, Window, and Frame Assemblies
	☐	08 3513	Folding Doors
	☐	08 3515	Accordion Folding Fire Doors
	☐	08 3613	Sectional Overhead Doors
2019-08-23	☐	08 3616	Barn All Glass Doors
2019-08-23	☐	08 4110	Interior Storefront
	☐	08 4127	Exterior All-Glass Entrances and Storefronts
	☐	08 4128	Interior All-Glass Entrances and Storefronts
	☐	08 4213	Exterior Aluminum Entrance Doors
2019-08-23	☐	08 4216	Interior Aluminum Entrance Doors
	☐	08 4229	Automatic Entrances
	☐	08 4233	Revolving Entrance Doors

2019-08-23	☐	08 4243	Medical Specialty Sliding Entrances
2019-08-23	☐	08 4400	Glazed Aluminum Framing Systems
	☐	08 4426	Structural Glass Curtainwall
	☐	08 4500	Translucent Insulating Panel Assemblies
	☐	08 5113	Aluminum Windows
2019-08-23	☐	08 5619	Sliding Pass Windows
	☐	08 5656	Bullet-Resistive Windows
	☐	08 6200	Unit Skylights
	☐	08 6300	Metal-Framed Skylights
2020-03-09	☒	08 7100	Door Hardware
	☐	08 7121	Interior Automatic Door Operators for Staff Use
2019-08-23	☐	08 7122	Automatic Door Operators for the Disabled
2019-08-23	☐	08 8000	Glazing
	☐	08 8300	Unframed Mirrored Glazing
2019-08-23	☐	08 8816	Between Glass Blinds Units
	☐	08 8840	Switchable Privacy Glass Units
	☐	08 9100	Wall Louvers

DIVISION 09 - FINISHES

	☐	09 0565	Floor Preparation for Renovation Work
	☐	09 0600	Room Finish Schedule
	☐	09 2300	Gypsum Plastering
2019-08-23	☐	09 2400	Portland Cement Plastering
	☐	09 2600	Veneer Plastering
	☐	09 2613	Gypsum Veneer Plastering
	☐	09 2713	GFRG Fabrications
2019-09-09	☐	09 2900	Gypsum Board Assemblies
2019-09-20	☐	09 3000	Tiling
2019-08-23	☐	09 5113	Acoustical Panel Ceilings
	☐	09 5133	Acoustical Metal Pan Ceilings
	☐	09 5135	Snap-in Metal Pan Ceilings
	☐	09 5423	Linear Metal Ceilings
	☐	09 5436	Suspended Decorative Grids
2019-08-23	☐	09 6115	Concrete Floor Sealer
	☐	09 6116	Liquid Floor Hardener
	☐	09 6119	Moisture Floor Treatment
	☐	09 6340	Stone Flooring
	☐	09 6400	Wood Flooring
2019-08-23	☐	09 6500	Resilient Flooring
2019-08-23	☐	09 6513	Resilient Base and Accessories
	☐	09 6520	Interlocking Rubber Tile Flooring
2019-09-20	☐	09 6566	Resilient Athletic Flooring
	☐	09 6603	Precast Terrazzo Flooring for Stairs
	☐	09 6613	Thick-Set Terrazzo Flooring
2019-08-23	☐	09 6623	Thin-Set Terrazzo Flooring
	☐	09 6723	Resinous Flooring
2019-08-23	☐	09 6800	Carpeting
	☐	09 6900	Access Flooring
2019-08-23	☐	09 7200	Wall Covering
	☐	09 7213	Tackboard Wall Coverings
	☐	09 7500	Interior Stone Facing

	☐	09 7723	Fabric Wrapped Panels
2019-08-23	☐	09 8433	Acoustical Wall Panels
2019-08-23	☐	09 9100	Painting
	☐	09 9413	Textured Interior Coatings
	☐	09 9600	High-Performance Coatings
	☐	09 9613	Multicolored Interior Coatings
2019-08-23	☐	09 9653	Elastomeric Coatings
2019-08-23	☐	09 9663	Textured Acrylic Coating

DIVISION 10 - SPECIALTIES

2019-08-23	☐	10 1100	Visual Display Boards
	☐	10 1146	Visual Display Fabrics
2019-08-23	☐	10 1400	Interior Signage
	☐	10 1443	Photoluminescent Exit Path Marking System
	☐	10 1700	Telephone Specialties
2019-08-23	☐	10 2113	Toilet Compartments
2019-08-23	☐	10 2115	Cubicle Specialties
	☐	10 2213	Wire Mesh Partitions
	☐	10 2223	Accordion Folding Partitions
2019-09-09	☐	10 2238	Operable Panel Partition
	☐	10 2239	Vertically Folding Panel Partitions
2019-08-23	☐	10 2613	Wall and Corner Guards
2019-08-23	☐	10 2813	Toilet Accessories
	☐	10 2819	Shower Doors and Enclosures
2019-08-23	☐	10 4116	Emergency Key Cabinets
2019-08-23	☐	10 4400	Fire Protection Specialties
	☐	10 4450	Automated External Defibrillators (AED)
2019-08-23	☐	10 5113	Metal Lockers
	☐	10 5116	Wood Lockers
	☐	10 5503	USPS-Delivery Postal Specialties
	☐	10 5506	Private-Delivery Postal Specialties
2019-08-23	☐	10 5713	Wall Mounted Coat Rack and Shelf
2019-08-23	☐	10 7310	Aluminum Walkways and Canopies

DIVISION 11 - EQUIPMENT

	☐	11 1300	Loading Dock Equipment
2019-08-23	☐	11 2400	Building Maintenance Equipment
2019-08-23	☐	11 5213	Projection Screens
2019-08-23	☐	11 7000	Medical Equipment
	☐	11 7313	Wall-Mounted Fold-Up Writing Surface
	☐	11 7316	Wall-Mounted Chart Rack

DIVISION 12 - FURNISHINGS

	☐	12 2113	Horizontal Louver Blinds
	☐	12 2116	Vertical Louver Blinds
2019-08-23	☐	12 2413	Roller Window Shades

	☐	12 2500	Between Glass Blinds
2019-09-09	☐	12 3553	Laboratory Casework
2019-09-09	☐	12 3571	Stainless Steel Casework
	☐	12 3640	Stone Countertops
2019-08-23	☐	12 3661	Simulated Stone Countertops
	☐	12 4816	Entrance Floor Grilles
	☐	12 4843	Entrance Floor Mats
	☐	12 6300	Stadium Seating
2019-08-23	☐	12 9313	Bicycle Racks

DIVISION 13 - SPECIAL CONSTRUCTION

	☐	13 2817	Ballpark Netting and Supports
	☐	13 3448	Pre-Fabricated Rooftop Helipad
	☐	13 4900	Radiation Protection
	☐	13 4923	RF/MRI Modular Shielding Enclosure
2019-05-10	☐	13 8500	Seismic Protection

DIVISION 14 - CONVEYING EQUIPMENT

	☐	14 1000	Dumbwaiters
2019-05-10	☐	14 2100	Electric Traction Elevators
	☐	14 2400	Hydraulic Elevators
	☐	14 3100	Escalators
	☐	14 9100	Chutes
	☐	14 9200	Pneumatic Tube Systems

DIVISION 31 - EARTHWORK

2019-01-18	☐	31 1000	Site Clearing
	☐	31 2000	Earth Moving
2019-02-08	☐	31 2200	Grading
2019-02-08	☐	31 2300	Excavation and Fill
2019-03-20	☐	31 2311	Earthwork for Building Construction
	☐	31 2400	Earthwork for Structures
2019-01-18	☐	31 2500	Erosion and Sedimentation Controls
	☐	31 3116	Termite Control
	☐	31 6213	Prestressed Concrete Piles
	☐	31 6216	Steel H Piles
	☐	31 6218	Mini-Piles
	☐	31 6329	Drilled Concrete Piers

DIVISION 32 - EXTERIOR IMPROVEMENTS

2019-02-08	☐	32 1100	Base Courses
2019-02-08	☐	32 1200	Flexible Paving
	☐	32 1300	Rigid Paving
2019-02-08	☐	32 1313	Concrete Paving
	☐	32 1373	Concrete Paving Joint Sealants

		32 1413	Interlocking Precast Concrete Paving
	☐	32 1416	Brick unit Paving
	☐	32 1440	Stone Paving
2019-02-08	☐	321613	Curbs and Gutters
2019-09-09	☐	321700	Paving Specialties
	☐	32 1715	Parking Accessories
	☐	32 3113	Chain Link Fencing
	☐	32 3115	Tubular Steel Fencing
	☐	32 3117	Gate Operators
	☐	32 3121	Cable Guardrail System

DIVISION 33 - UTILITIES

2019-01-18	☐	33 1000	Water Utilities
2019-05-10	☐	33 3000	Sanitary Sewerage Utilities
2019-05-10	☐	33 3200	Wastewater Utility Pumping stations
	☐	33 3400	Sanitary Utility Sewerage Force Mains
2019-05-10	☐	33 4000	Storm Drainage Utilities
2019-05-10	☐	33 4600	Sub drainage Pipe
	☐	33 4613	Foundation Drainage System

END OF TABLE OF CONTENTS

Table of Contents Generated by MasterWorks: 8/23/2019

Division	Section Title	Pages
	PROCUREMENT AND CONTRACTING DOCUMENTS GROUP	
DIVISION 00 - PROCUREMENT AND CONTRACTING REQUIREMENTS		
NOT APPLICABLE		
	SPECIFICATIONS GROUP	
	Facility Services Subgroup	
DIVISION 21 - FIRE SUPPRESSION		
21 0517	SLEEVES AND SLEEVE SEALS FOR FIRE-SUPPRESSION PIPING	6
21 1119	FIRE-DEPARTMENT CONNECTIONS	2
21 1313	WET-PIPE SPRINKLER SYSTEMS	12
21 3113	ELECTRIC-DRIVE, CENTRIFUGAL FIRE PUMPS	8
21 3900	CONTROLLERS FOR FIRE-PUMP DRIVERS	12
DIVISION 22 - PLUMBING		
22 0513	COMMON MOTOR REQUIREMENTS FOR PLUMBING EQUIPMENT	4
22 0516	EXPANSION FITTINGS AND LOOPS FOR PLUMBING PIPING	8
22 0517	SLEEVES AND SLEEVE SEALS FOR PLUMBING PIPING	4
22 0518	ESCUTCHEONS FOR PLUMBING PIPING	4
22 0519	METERS AND GAGES FOR PLUMBING PIPING	10
22 0523	GENERAL-DUTY VALVES FOR PLUMBING PIPING	8
22 0529	HANGERS AND SUPPORTS FOR PLUMBING PIPING AND EQUIPMENT	12
22 0553	IDENTIFICATION FOR PLUMBING PIPING AND EQUIPMENT	6
22 0716	PLUMBING EQUIPMENT INSULATION	18
22 0719	PLUMBING PIPING INSULATION	18
22 1116	DOMESTIC WATER PIPING	16
22 1119	DOMESTIC WATER PIPING SPECIALTIES	12
22 1123	DOMESTIC WATER PUMPS	4
22 1123.13	DOMESTIC-WATER PACKAGED BOOSTER PUMPS	14
22 1316	SANITARY WASTE AND VENT PIPING	16
22 1319	SANITARY WASTE PIPING SPECIALTIES	10
22 1413	FACILITY STORM DRAINAGE PIPING	14
22 1423	STORM DRAINAGE PIPING SPECIALTIES	6
22 1429	SUMP PUMPS	6
22 1513	GENERAL-SERVICE COMPRESSED-AIR PIPING	18
22 1519	GENERAL-SERVICE PACKAGED AIR COMPRESSORS AND RECEIVERS	12
22 2311	FACILITY NATURAL-GAS PIPING	12
22 3400	FUEL-FIRED, DOMESTIC-WATER HEATERS	8
22 4100	RESIDENTIAL PLUMBING FIXTURES	6
22 4500	EMERGENCY PLUMBING FIXTURES	16
22 5214	HEAT TRACING FOR PLUMBING PIPING	10
22 6213	VACUUM PIPING FOR LABORATORY AND HEALTHCARE FACILITIES	12

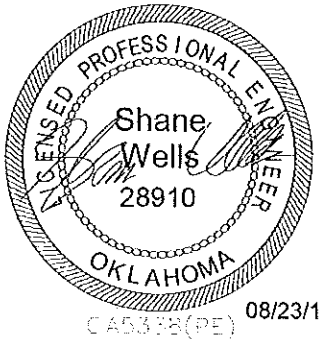

LICENSED PROFESSIONAL ENGINEER
Shane Wells
28910
OKLAHOMA
CA5338(PE)
08/23/19

22 6219	VACUUM EQUIPMENT FOR LABORATORY AND HEALTHCARE FACILITIES	16
DIVISION 23 - HEATING, VENTILATING, AND AIR CONDITIONING (HVAC)		
23 0513	COMMON MOTOR REQUIREMENTS FOR HVAC EQUIPMENT	4
23 0514	VARIABLE-FREQUENCY MOTOR CONTROLLERS	4
23 0529	HANGERS AND SUPPORTS FOR HVAC PIPING AND EQUIPMENT	8
23 0548	VIBRATION AND SEISMIC CONTROLS FOR HVAC PIPING AND EQUIPMENT	6
23 0553	IDENTIFICATION FOR HVAC PIPING AND EQUIPMENT	4
23 0593	TESTING, ADJUSTING, AND BALANCING FOR HVAC	12
23 0713	DUCT INSULATION	12
23 0716	HVAC EQUIPMENT INSULATION	16
23 2300	REFRIGERANT PIPING	6
23 3113	METAL DUCTS	14
23 3300	AIR DUCT ACCESSORIES	10
23 3423	HVAC POWER VENTILATORS	4
23 3600	AIR TERMINAL UNITS	4
23 3713	DIFFUSERS, REGISTERS, AND GRILLES	4
23 7413	PACKAGED, OUTDOOR, CENTRAL-STATION AIR-HANDLING UNITS	6
23 7500	HVAC SILENCERS	4
23 8126	MINI SPLIT-SYSTEM AIR-CONDITIONERS	12
23 8126	SPLIT-SYSTEM AIR-CONDITIONERS	6
23 8219	FAN COIL UNITS	6
23 8233	ELECTRIC CONVECTORS	6
DIVISION 25 - INTEGRATED AUTOMATION		
25 5050	DIRECT DIGITAL CONTROLS SYSTEM	18

END OF TABLE OF CONTENTS

Table of Contents Generated by MasterWorks: 8/23/2019

Division	Section Title	Pages
	PROCUREMENT AND CONTRACTING DOCUMENTS GROUP	
DIVISION 00 - PROCUREMENT AND CONTRACTING REQUIREMENTS		
NOT APPLICABLE		
	SPECIFICATIONS GROUP	
	Facility Services Subgroup	
DIVISION 26 - ELECTRICAL		
26 0519	LOW-VOLTAGE ELECTRICAL POWER CONDUCTORS AND CABLES	8
26 0526	GROUNDING AND BONDING FOR ELECTRICAL SYSTEMS	10
26 0529	HANGERS AND SUPPORTS FOR ELECTRICAL SYSTEMS	6
26 0533	RACEWAYS AND BOXES FOR ELECTRICAL SYSTEMS	12
26 0539	UNDERFLOOR RACEWAYS FOR ELECTRICAL SYSTEMS	8
26 0543	UNDERGROUND DUCTS AND RACEWAYS FOR ELECTRICAL SYSTEMS	20
26 0544	SLEEVES AND SLEEVE SEALS FOR ELECTRICAL RACEWAYS AND CABLING	4
26 0548.16	SEISMIC CONTROLS FOR ELECTRICAL SYSTEMS	6
26 0553	IDENTIFICATION FOR ELECTRICAL SYSTEMS	10
26 0574	OVERCURRENT PROTECTIVE DEVICE ARC-FLASH STUDY	6
26 0923	LIGHTING CONTROL DEVICES	8
26 2200	LOW-VOLTAGE TRANSFORMERS	8
26 2413	SWITCHBOARDS	14
26 2416	PANELBOARDS	14
26 2713	ELECTRICITY METERING BY UTILITY	6
26 2726	WIRING DEVICES	10
26 2816	ENCLOSED SWITCHES AND CIRCUIT BREAKERS	14
26 4113	LIGHTNING PROTECTION FOR STRUCTURES	4
26 4313	SURGE PROTECTION FOR LOW-VOLTAGE ELECTRICAL POWER CIRCUITS	6
26 5119	LED INTERIOR LIGHTING	8
26 5619	LED EXTERIOR LIGHTING	10
26 0943	CRESTRON LIGHTING CONTROLS	30
263213	ENGINE GENERATORS	12
263600	TRANSFER SWITCHES	8
DIVISION 27 - COMMUNICATIONS		
27 5313	CLOCK SYSTEMS	10
	CNIS NETWORK CONSTRUCTION STANDARDS AND REQUIREMENTS	28
DIVISION 28 - ELECTRONIC SAFETY AND SECURITY		
28 3111	DIGITAL, ADDRESSABLE FIRE-ALARM SYSTEM	20

END OF TABLE OF CONTENTS



GEOTECHNICAL ENGINEERING REPORT

CHEROKEE NATION OSU BUILDING

TAHLEQUAH, OKLAHOMA

Prepared for:

CHILDERS ARCHITECT
45 South 4th Street
Fort Smith, AR 72901

Prepared by:



Springfield, MO
4168 W. Kearney Springfield, MO 65803
Call 417.864.6000 Fax 417.864.6004
www.ppimo.com

PPI PROJECT NUMBER: 255932

April 4, 2019, Rev. 1

PALMERTON & PARRISH, INC.

GEOTECHNICAL & MATERIALS ENGINEERS
MATERIALS TESTING LABORATORIES
ENVIRONMENTAL SERVICES

4168 W. Kearney Street.
Springfield, MO 65803
Ph: (417) 864-6000
www.ppimo.com

April 4, 2019, Rev. 1

Childers Architect
45 South 4th Street
Fort Smith, AR 72901

Attn: Mr. Shane Boren, AIA, LEED AP
Email: shane@childersarchitect.com

RE: Geotechnical Engineering Report
New Cherokee Nation OSU Building
Tahlequah, Oklahoma
PPI Project Number: 255932

Dear Mr. Boren:

Attached, please find the report summarizing the results of the Geotechnical Investigation conducted for the proposed new Cherokee Nation OSU Building in Tahlequah, Oklahoma. We appreciate this opportunity to be of service. If you have any questions, please don't hesitate to contact this office.

PALMERTON & PARRISH, INC.
By:



4/04/19

Brandon R. Parrish, P.E.
Vice-President

PALMERTON & PARRISH, INC.
By:

Brad R. Parrish, P.E.
President

Submitted: One (1) Electronic .pdf Copy

BRP/BRP/jrh

PALMERTON & PARRISH, INC. INC.

TABLE OF CONTENTS

EXECUTIVE SUMMARY ..... 1, 2 & 3
1.0 INTRODUCTION 5
2.0 PROJECT DESCRIPTION 6
3.0 SITE DESCRIPTION 6
4.0 BACKGROUND INFORMATION 7
5.0 SUBSURFACE INVESTIGATION 7
5.1 Subsurface Borings 7
5.2 Laboratory Testing 8
6.0 SITE GEOLOGY 9
7.0 GENERAL SITE & SUBSURFACE CONDITIONS 9
7.1 Existing Fill 10
7.2 Groundwater 10
8.0 EARTHWORK 10
8.1 Fill Material Types 12
8.2 Acceptable LVC Material 12
8.3 Compaction Requirements 13
8.4 Site Drainage 13
8.5 Excavations 13
8.6 Rippability 14
8.7 Expansive Soils 14
8.8 Utility Trenches 14
9.0 FOUNDATIONS 15
9.1 Shallow Foundations 15
9.1.1 Uplift Capacity of Shallow Foundations 16
9.1.2 Construction Considerations for Shallow Foundations 17
9.1.3 Ground Improvement 17
9.2 Deep Foundations 17
9.2.1 Drilled Piers 17
9.2.2 Drilled Pier Design Recommendations 19
9.2.3 Lateral Loading for Drilled Piers 20
9.2.4 Drilled Pier Construction Recommendations 20
9.2.5 Drilled Pier Load Test 21
9.3 Driven Piles 21
9.3.1 H-Pile Driving Criteria & Pre-Boring 23
9.3.2 Driven Pile Construction Observation & PDA Testing 23
9.3.3 Lateral Loadings for Driven Piles 24
9.4 Settlement Potential 24
10.0 SEISMIC CONSIDERATIONS 25
11.0 FLOOR SLABS 26
11.1 Modulus of Subgrade Reaction 26
12.0 BELOW GRADE SLABS 27
12.1 Retaining Wall Backfill & Drainage 27
13.0 SOIL CORROSIVITY 30
14.0 PAVEMENT 30
14.1 Flexible Pavement 31
14.2 Rigid Pavement 31

14.3 Pavement Subgrade CBR 31
14.4 Pavement Thickness 32
15.0 GROUND PENETRATING RADAR 32
16.0 CONSTRUCTION OBSERVATION & TESTING 32
17.0 REPORT LIMITATIONS 34

FIGURES

FIGURE 1 – BORING LOCATION PLAN (W/ BUILDING FOOTPRINT)
FIGURE 2 – BORING LOCATION PLAN (AERIAL PHOTO ONLY)
FIGURE 3 – SHEAR WAVE VELOCITY TESTING OUTPUT (1D)

APPENDICES

APPENDIX I – BORING LOGS & KEY TO SYMBOLS
APPENDIX II – GENERAL NOTES
APPENDIX III – GRAIN SIZE ANALYSIS RESULTS
APPENDIX IV – IMPORTANT INFORMATION REGARDING YOUR GEOTECHNICAL REPORT

EXECUTIVE SUMMARY

A Geotechnical Investigation was performed at the site planned for construction of the new Cherokee Nation Oklahoma State University (OSU) Building located to the west of S. Bliss Avenue on the existing W.W. Hastings Hospital campus in Tahlequah, Oklahoma. This project is anticipated to include construction of a new building and access drive to the south. The new structure is anticipated to be three (3) to four (4) stories in height with a partial walk out basement to the south, steel framed, utilize a slab-on-grade floor system (north half) and a basement slab-on-grade (south half), exhibit light to moderate foundation loads, with a footprint measuring approximately 20,000 sq. ft. in plan view. Up to approximately 12 ft. of cut and 8 ft. of fill is anticipated within the building footprint on the south and north sides, respectively, to provide finish subgrade elevation. Based upon project plans, new pavement for an access drive will be located on the south side of the new building.

The existing Physical Therapy Building is located within the footprint of the proposed new structure. This building consists of a single-story, slab-on-grade structure and is anticipated to be demolished prior to construction of the new building. This building was present during drilling of Borings 1 through 10, while Borings 11 through 13 were drilled within the previous building footprint following demolition.

A total of twelve (12) borings were drilled within or immediately adjacent to the proposed building footprint during this Geotechnical Investigation. It should be noted that the original Boring 4 was omitted due to the unknown location of buried utilities. All borings were discontinued in natural overburden soils or chert at depths ranging from 9.4 to 30 ft. below the existing ground surface.

Based upon the information obtained from the borings and subsequent laboratory testing, the site is suitable for construction of the proposed new Cherokee Nation OSU Building. Important geotechnical considerations for the project are summarized below. However, users of the information contained in the report must review the entire report for specific details pertinent to geotechnical design considerations.

EXECUTIVE SUMMARY CONTINUED

- The project site primarily consists of the footprint of the existing Physical Therapy Building or grass covered lawn areas;
- Existing fill depths ranging from 1 to 5 feet were encountered within the Borings drilled. Deeper existing fill depths, up to approximately 8 ft., are anticipated at the southwest corner of the previous Physical Therapy building footprint based upon current site topography and existing finish floor elevation. However, most of the existing fill is anticipated to be removed during site grading;
- The existing fill consisted of chert gravels and sands or gravelly clays. **The origin and method of placement of the existing fill is unknown and for the purposes of this report should be considered uncontrolled;**
- Thin topsoil (~3 inches or less) was encountered within the majority of the borings located in grass covered areas;
- Overburden soils generally consisted of chert gravels and sands or gravelly clays with zones of solid chert, or chert boulders and cobbles, as typically found in the Tahlequah area. These soils were primarily logged as very stiff or very dense and exhibit significant drilling difficulty when using standard drilling methods;
- Voids underlying and within dense chert zones have been encountered at the project site, primarily along Hospital Drive and Visitors Drive located to the south and southeast of the proposed project site. Loss of drilling fluid return was noted within most borings drilled for the Cherokee Nation OSU Building, indicating fractures and possible voids within the chert stratum. These zones typically ranged from 0.5 to 1 ft. in thickness. However, large voids or caverns, were not noted during the subsurface exploration;

EXECUTIVE SUMMARY CONTINUED

- Foundation loads for the new Cherokee Nation OSU Building may be supported upon shallow foundations bearing upon very stiff or dense natural overburden soils, or controlled fill. All existing fill below proposed new foundations/slabs should be removed and replaced. These recommendations are further discussed in Section 9.0 of this report;

- Foundation loads may also be supported upon deep foundations bearing in very stiff/very dense natural overburden soils/chert or bedrock, although only **one (shallow or deep) foundation type** is recommended for the structure. Deep foundation recommendations are further discussed in Section 10.0 of this report. **However, due to the potential presence of voids within the subsurface and associated potential concrete loss during construction, shallow foundations are the recommended foundation alternate;**

- Due to the stiff and/or dense nature of the existing subgrade soils, sufficient support is anticipated to be provided for any slabs or pavements;

- The project site classifies as a Site Class C in accordance with Section 1613 of the 2015 International Building Code (IBC), as determined by shear wave velocity testing performed at the site during this investigation;

- Excavation and mass earth moving at this project site is anticipated to generally be difficult and variable. Excavation difficulty and rippability of the existing overburden soils at the site is further discussed in Section 8.6 of this report;

- Once basement excavation and undercutting of the existing fill has been performed, it is recommended that the building footprint be scanned using Ground Penetrating Radar (GPR) in search for large shallow subsurface voids. PPI has performed a similar investigation using GPR in the past to the south of the site with success; and

- Palmerton & Parrish, Inc. should be retained for construction observation and construction materials testing. Close monitoring of subgrade preparation work is considered critical to achieve adequate foundation and subgrade performance.

GEOTECHNICAL ENGINEERING REPORT

NEW CHEROKEE NATION OSU BUILDING

TAHLEQUAH, OKLAHOMA

1.0 INTRODUCTION

This is the report of the Geotechnical Investigation performed at the site planned for construction of the new Cherokee Nation OSU Building located west of S. Bliss Avenue on the existing W.W. Hastings Hospital campus in Tahlequah, Oklahoma. This investigation was authorized by a letter proposal prepared by Palmerton & Parrish, Inc. (PPI) dated January 7, 2019 and signed by Mr. Breck Childers, AIA, representing Childers Architect. The approximate site location is shown below for reference.



The purpose of the Geotechnical Investigation was to provide recommendations for foundation design and construction planning, and to aid in site development. Palmerton & Parrish Inc.'s (PPI) scope of services included field and laboratory investigation of the subsurface conditions in the vicinity of the proposed project site, engineering analysis of the collected data, development of recommendations for foundation design and construction planning, and preparation of this engineering report.

2.0 PROJECT DESCRIPTION

Item	Description
Site Layout	See Figure 1: Boring Location Plan
New Cherokee Nation OSU Building	• Three to four-stories in height; • Slab-on-grade (north half) & walk out basement (south half); • Steel framed; • Finish Floor Elevation (ground level) = 908.67; • Basement Elevation = 892.67; • Column loads ranging from 5 to 600 kips; • Wall loads ranging from 0.5 to 3 kips per foot; and • Measure approximately 20,000 sq. ft. in plan view.
Pavement	New pavement for an access drive is also anticipated at the south end of the proposed new structure at the walk out basement elevation.
Anticipated Grading	• 8 ft. fill – North Half; and • 12 ft. cut – South Half.
Retaining Wall	A below grade foundation (retaining) wall will be constructed along the east side (south half) and within the center of the structure separating the slab-on-grade and basement structure.

3.0 SITE DESCRIPTION

Item	Description
Latitude/Longitude (± Center of Project Site)	35.909978° / -94.951009°
Available Historic Aerial Photography	The north half of the existing Physical Therapy Building is believed to have been constructed in approximately 2007 with the southern addition constructed in 2011. The project site is believed to have consisted of grass/wooded areas since prior to construction of the existing Physical Therapy Building. The W.W. Hastings Hospital is believed to have been constructed around the early 1980's.
Current Ground Cover	Building or grass/gravel covered.
Existing Topography	Sloping to the southwest
Drainage Characteristics	Fair to Good.

4.0 BACKGROUND INFORMATION

PPI performed the geotechnical investigation for currently under construction Cherokee Nation Outpatient Health Clinic located to the east of the proposed project site. During this investigation, only minor voids at significant depth were noted in the borings drilled. However, during mass grading for the project, significant voids were noted to the south and southeast of the proposed project site during construction of Hospital and Visitors Drive.

5.0 SUBSURFACE INVESTIGATION

Subsurface conditions were investigated through completion of twelve (12) subsurface borings and subsequent laboratory testing. One (1) boring, Boring 4, was omitted as discussed below. In addition, shear wave velocity testing was also performed for seismic site classification purposes.

5.1 Subsurface Borings

All borings were located within or adjacent to the proposed structure footprint. As previously mentioned, the existing Physical Therapy Building is presently located at the site, which limited the area in which could be accessed during drilling of Borings 1 through 10. Following building demolition, Borings 11 through 13 were drilled within the demolished building footprint. Borings were identified as Borings 1 through 13 and are shown on Figure 1: Boring Location Plan. Boring locations were selected by PPI based upon recommendations by the Design Team and adjusted to areas accessible by a drill rig. Boring 4 was not drilled due to the unknown location of buried utilities within this area.

Borings drilled were discontinued in chert or natural overburden soils at depths ranging from 9.4 to 30 ft. below the existing ground surface. The Oklahoma One-Call System, as well as hospital maintenance personnel, were notified prior to the investigation to assist in locating buried public and private utilities, respectively. Logs of the borings showing descriptions of soil and rock units encountered, as well as results of field and laboratory tests and a “Key to Symbols” are presented in Appendix I. Surface elevations for each boring are noted on each boring log.

Surface elevations were surveyed in the field using the existing Physical Therapy finish floor elevation as a benchmark and are anticipated to be within +/- 0.5 ft. of actual elevations.

Borings were drilled January 21 through 24, and March 27 and 28, 2019 using a 3.625-inch tricone with wash rotary methods or 4.25" I.D. hollow stem augers. All borings were drilled by an ATV-mounted CME-1050 drill-rig. Soil samples were collected at 2.5 to 5-ft. centers during drilling using a split spoon sampler while performing the Standard Penetration Test (SPT) in general accordance with ASTM D1586. Please refer to Appendix II for general notes regarding boring logs and additional soil sampling information.

5.2 Laboratory Testing

Collected samples were sealed and transported to the laboratory for further evaluation and visual examination. Laboratory soil testing included the following:

- Moisture Content (ASTM D2216);
- Grain Size Analysis (ASTM D6913);
- Atterberg Limits (ASTM D4318); and
- Pocket Penetrometers.

Laboratory test results are shown on each boring log in Appendix I and are summarized in the following table and grain size analysis results are also presented in Appendix III.

Boring	Depth (ft.)	Liquid Limit (LL)	Plastic Limit (PL)	Plasticity Index (PI)	Moisture Content (%)	USCS Symbol	% Passing No. 200 Sieve
1	3	-	-	-	15.2	GC	18
2	3.5	-	-	-	19.1	GC	19
3	13.5	-	-	-	21.5	GC	25
6	13.5	86	26	60	40.0	CH	-
8	3.5	-	-	-	12.9	GC	27
9	18	-	-	-	19.2	SC	30
9	23	89	26	63	40.8	CH	-
10	8.5	-	-	-	-	GC	14
10	23.5	65	21	44	28.2	CH	-
11	3.5	-	-	-	18.5	SC	23
12	3.5	-	-	-	11.4	GC	32
13	3.5	-	-	-	12.0	GC	41
13	28.5	-	-	-	19.3	GC	40
Note: Sample classification sometimes differs from general strata description on the boring logs due to relatively small sample size & coarse nature of the strata. See individual boring logs for description of general strata.							

6.0 SITE GEOLOGY

According to the United States Geologic Survey's Geological Map of Oklahoma, the general site is underlain at depth by Mississippian Age deposits primarily of the Keokuk and Reeds Spring formation and the St. Joe Group. Within the site area, the primary rock type is chert with other rock types consisting of limestone and shale. Overburden soils at the site are typically residual having developed through chemical and physical weathering of the underlying parent bedrock, consisting primarily of chert fragments, boulders and clay layers. The boundary between overburden soils and relatively unweathered limestone is usually abrupt.

7.0 GENERAL SITE & SUBSURFACE CONDITIONS

Based upon subsurface conditions encountered within the borings drilled at the project site, generalized subsurface conditions are fairly consistent across the project site, and similar to typical overburden soils found within the Tahlequah area. Surficial materials primarily consist of thin (approximately 3-inches or less) topsoil, overlying very stiff to very dense chert laden lean or fat clays. Oftentimes the percentage of clay is less than 50 percent, and the soils classify as chert gravels or sands. Zones of relatively chert

free very stiff fat clays were encountered, but are believed to be isolated. These conditions are presented on each boring log attached in Appendix I. Soil stratification lines on the boring logs indicate approximate boundary lines between different types of soil and rock units based upon observations made during drilling. In-situ transitions between soil and some rock types are typically gradual.

7.1 Existing Fill

As previously mentioned, approximately 1 to 5 ft. of existing fill was noted within the borings drilled. However, based upon site topography and the previous building finish floor elevation, existing fill depths up to 8 ft. are possible at the southwest building corner. Within the proposed new basement area (south half), most if not all of the existing fill is anticipated to be removed. Within the north half, additional fill is required to achieve proposed finish grade. The existing fill primarily classified as clayey gravel or sand, similar to the surrounding natural soils. Due to the undocumented nature of this fill material, all existing fill material should be removed if not already required to be removed to achieve plan grades. The existing fill removed will most likely be satisfactory for re-use within most areas, but material classification confirmation with Section 8.1 below should be confirmed by PPI prior to use.

7.2 Groundwater

Shallow groundwater was not noted within the borings on the date drilled. However, it should be noted that water-based drilling methods were used during field drilling. As a result, obtaining groundwater levels below a couple feet in depth was not possible. Groundwater levels should be expected to fluctuate with changes in site grading, precipitation, and regional groundwater levels. Groundwater may be encountered at shallower depths during wetter periods.

8.0 EARTHWORK

As previously mentioned, up to approximately 8 ft. of fill and 12 ft. of cut is anticipated within the north and south half of the proposed structure footprint, respectively, to provide finish subgrade elevations.

The initial phase of site preparation should include the following:

- Removal of the existing physical therapy building (performed March 2019) and any existing foundations or slabs within the proposed building footprint. In addition, clearing and grubbing of all vegetative matter should be performed within current lawn/landscape areas. All vegetative matter, including trees/root bulbs and topsoil should be removed from areas scheduled to receive new fill and/or slab/pavement construction;

- Topsoil/vegetative matter stripping on the order of 3-inches should be anticipated in grass covered areas. Topsoil should either be hauled off-site or stockpiled for reuse in lawn and landscape areas only;

- **Much of the existing fill material is anticipated to be removed to achieve finish subgrade elevations at the project site. However, several feet of existing fill material is anticipated to be present near the center and north end of the proposed structure, located on the north side of the future basement area. Any existing fill remaining after initial site grading should be removed, and properly replaced in accordance with Section 8.0 of this report; and**

- Areas scheduled to receive controlled fill should be proof-rolled and approved in accordance with the following section of this report.

After the initial phase is complete, it is recommended that all building, pavement and undercut bottoms be proof-rolled to assure a stable subgrade. Proof-rolling consists essentially of rolling the ground surface with a fully loaded tandem axle dump truck or similar heavy rubber-tired construction equipment and noting any areas which rut or deflect during rolling. All soft subgrade areas, if any, identified during proof-rolling should be undercut and replaced with compacted fill as outlined below. Proof-rolling, undercutting and replacement should be monitored by a representative of PPI. **Although anticipated to be minimal, the depth and areal extent of undercutting soft subgrade areas will be largely dependent upon the time of year and related soil moisture conditions. If construction is initiated during or**

immediately following wetter months, the requirement for undercutting soft surficial soils below planned cut depths should be anticipated and reflected in the contract documents.

After evaluation by proof-rolling and approval, the subgrade should be scarified to a depth of at least 8 inches, adjusted to within the optimum moisture content ranges and compacted to specified density, provided below (See Section 8.3). Placement of controlled fill may then proceed.

8.1 Fill Material Types

Fill Type[1]	USCS Classification	Acceptable Location for Placement
On-Site Soils / Imported Fill	GC, SC, SW or GW	**Required** beneath building footprint **(below foundation elements)**, extending outside perimeter walls a horizontal distance equal to the height of fill embankment. Also acceptable for all other areas/elevations not requiring LVC material.
Low Volume Change (LVC) Engineered Fill[2]	CL, GC, or SC (LL < 50)	**Required** beneath slabs for a depth of 2 ft., CL materials should be placed **above foundation elements only**. May be used below foundations if classifying as a GC or SC only. Acceptable for all other areas/elevations outside the building footprint as well.
On-Site Natural Soils	ML[3]	All locations and elevations
On-Site Natural Soils	CH	Should **not** be placed within the upper 2 ft. beneath foundations, floor slabs and pavements.

1. Controlled, compacted fill should consist of approved materials that are free of organic matter and debris and contain maximum rock size of 12 inches, or the lift thickness, whichever is less. Frozen material should not be used and fill should not be placed on a frozen subgrade. A sample of each material type should be submitted to the Geotechnical Engineer for evaluation prior to its use.
2. Low plasticity cohesive soil or granular soil having a liquid limit of less than 50%, contain at least 15% fines retained on the No. 200 sieve, and preapproved by the Geotechnical Engineer.
3. ML soils are only considered suitable as controlled fill, if containing at least 35% gravel sized particles.

8.2 Acceptable LVC Material

LVC material is recommended within 2 ft below bottom of floor slab elevation. Potential sources of LVC material are as follows:

- Import from an off-site borrow area complying with Table 8.1; and

- On-site soils, classifying as CL, SC or GC may be segregated during footing or floor slab undercutting procedures or general earthwork procedures.

Most soil types present at the project site classify as LVC fill material, except CH material. Topsoil strippings or material containing organics should not be used as LVC material.

8.3 Compaction Requirements

Item	Description
Subgrade Scarification Depth	At least 8 inches
Fill Lift Thickness	12-inches (loose) using the minimum compactor referenced below
Compaction Requirements[1]	Six (6) passes (3 each direction) minimum using a self-propelled vibratory compactor with a minimum drum diameter of 48-inches for granular soils, or 95% Standard Proctor Density (ASTM D698) for materials containing sufficient fines content allowing for accurate field nuclear density testing.
Moisture Content	• ± 2% optimum moisture for CL, SC, GC, GW & SW Soil Types; and • 0 to 4% above optimum for CH Soil Types.
Field Density Testing Frequency (if material type allows)	• Building Areas – One (1) test every 2500 sq. ft. per fill lift; • Pavement Areas – One (1) test every 5000 sq. ft. per fill lift; and • No less than three (3) tests per each fill lift.
1. We recommend that engineered fill (including scarified compacted subgrade) be tested for moisture content and compaction during placement. Should the results of the in-place density tests indicate the specified moisture or compaction limits have not been met, the area represented by the test should be reworked and retested as required until the specified moisture and compaction requirements are achieved.	

8.4 Site Drainage

Discharge from roof downspouts should be collected and diverted well away from the building perimeter. Rapid, efficient runoff away from the building should also be provided. In addition, landscaping requiring frequent watering should be prohibited adjacent to building foundations.

8.5 Excavations

Based upon the subsurface conditions encountered during this investigation, the on-site soils typically classify as Type B in accordance with OSHA regulations. Temporary excavations in soils classifying as Type B with a total height of less

than 20 ft. should be cut no steeper than 1H:1V in accordance with OSHA guidelines. **Confirmation of soil classification during construction, as well as construction safety (including shoring, if required), is the responsibility of the contractor.**

8.6 Rippability

As mentioned throughout this report, the overburden soils at the project site primarily consist of very dense clayey gravels with chert cobbles and boulders with isolated areas consisting of clays with a reduced chert content. Significant difficulty was experienced when drilling the geotechnical borings within this chert laden material. Based upon this information, the overburden soils are anticipated to be rippable with dozers, but with difficulty. In addition, areas resistant to ripping consisting of large chert boulders, requiring other removal methods (pneumatic breakers) should be anticipated. The Earthwork Contractor should review the attached boring logs when assessing excavation difficulty at this site. Mass grading at this site is anticipated to occur at a slower rate as compared to sites where overburden soils are primarily fine grained (silts and clays).

8.7 Expansive Soils

Due to the overburden soils primarily consisting of clayey gravels and gravelly clays, significant shrink/swell behavior is not anticipated. If relatively chert free fat clay zones are encountered at footing bottom and finish subgrade elevation, they should be undercut 2 ft., or to gravelly clays/clayey gravels, whichever is shallower, and replaced with LVC fill material. Although isolated zones of fat clays were encountered during drilling, they are not the primary material anticipated within footing, floor slab and pavement subgrades. In any event, soil subgrades should not be allowed to become dry and dessicate prior to concrete placement.

8.8 Utility Trenches

New utility trenches servicing the new structures are anticipated to be required. These trenches are often times sources of moisture migration into the structure. A relatively impervious material (clay with little rock, etc.) should be placed within the

utility trench, surrounding the utility immediately outside the structure to reduce the potential for moisture migration into the structure via utility trenches. The "trench plug" should extend out from the structure a minimum of 5 ft. horizontally, and be placed in a controlled manner in accordance with Section 8.3 above.

9.0 FOUNDATIONS

As previously mentioned, the new Cherokee Nation OSU Building is anticipated to exhibit light to moderate foundation loads (column loads ranging from approximately 5 to 600 kips with wall loads ranging from 0.5 to 3 kips per foot). Recommendations for both shallow foundations and deep foundations are provided in the following sections. Due to primarily dense/stiff consistency of the existing overburden soils, as well as the potential concrete loss during placement of deep foundation elements due to potential deeper subsurface voids, shallow foundations are the preferred foundation alternate. **Regardless, only one foundation type is recommended to reduce the potential for differential settlement.**

9.1 Shallow Foundations

Foundation loads at this project site may be supported upon stiff or dense natural overburden soils or controlled fill placed in accordance with Section 8.0 of this report, **following removal and replacement of the existing fill within the building footprint placed in accordance with Sections 8.1 and 8.3 above.** Recommendations for shallow foundation design and construction are provided in the following table.

Description	Column (Spread Footing)	Wall (Continuous Footing)
Net Allowable Bearing Pressure[1]	5,000 psf	4,500 psf
Minimum Dimensions	2.5 ft.	1.5 ft.
Recommended Bearing Depth (Natural Soils or Controlled Fill)[2]	Depth sufficient to achieve minimum frost protection	
Minimum Embedment Below Finished Grade for Frost Protection & Variation in Soil Moisture[3]	2.0 ft.	
Passive Pressure[4]	Allowable = 230 pcf (equivalent fluid pressure) Ultimate = 460 pcf (equivalent fluid pressure)	
Coefficient of Sliding Friction[5]	Allowable = 0.26 (natural soils/controlled fill) Ultimate = 0.52 (natural soils/controlled fill)	

1. The recommended net allowable bearing pressure is the pressure in excess of the minimum surrounding overburden pressure at the footing base elevation. The recommended pressure considers that all unsuitable and/or soft or loose soils, if encountered, are undercut and replaced with tested and approved new engineered fill. Footing excavations should be free of loose and disturbed material, debris, and water when concrete is placed. **This bearing pressure assumes stiff or dense material is present below footing bottoms and any fill material placed below foundations consists of properly placed clayey gravels or gravelly clays.**
2. PPI should be retaining to observe footing bottoms prior to placing concrete.
3. For perimeter footings and footings beneath unheated areas.
4. Allowable passive pressure value considers a Factor of Safety of approximately 2, while the Ultimate value does not include a factor of safety. Passive pressure value applies to undisturbed natural overburden soils or properly compacted fill. If formed footings are constructed, the space between the formed side of a footing and excavation sidewall should be cleaned of all loose material, debris, and water and backfilled with tested and approved fill compacted to at least 95% of the material's Standard Proctor dry density.
5. Allowable coefficient of friction value assumes a Factor of Safety equal to approximately 2, while the Ultimate value does not include a factor of safety. This value is applicable for on-site clayey gravels and gravelly clays.

9.1.1 Uplift Capacity of Shallow Foundations

Resistance of shallow spread footings to uplift (U_p) may be based upon the dead weight of the concrete footing structure (W_C) and the weight of soil backfill contained in an inverted cone or pyramid directly above the footings (W_S). The following parameters may be used in design:

Description	Weights
Weight of Concrete (W_c)	150 pcf
Weight of Soil Resistance (W_s)	100 pcf

The base of the cone or pyramid should be the top of the footing and the pyramid or cone sides should form an angle of 30 degrees with the vertical. Allowable uplift capacity (U_p) should be computed as the lesser of the two (2) equations listed below:

$$U_P = (W_S/2.0) + (W_C/1.25) \text{ or } U_P = (W_S + W_C)/1.5$$

9.1.2 Construction Considerations for Shallow Foundations

It is essential that footing bottoms should not be allowed to become dry and desiccate prior to concrete placement to help reduce the potential for shrink/swell behavior. Footings should be clean and free of standing water, debris, and loose soil at the time of concrete placement. Footing/mat excavations should be observed by a representative of PPI prior to placement of reinforcing steel and concrete placement.

9.1.3 Ground Improvement

Due to the dense to very dense overburden soils at the project site, ground improvement using aggregate piers is not believed to be an economic foundation system. Due to the significant drilling difficulties associated with very dense and large size chert, installation of aggregate piers is anticipated to be costly, as well as time consuming and provide little increase in allowable bearing capacity.

9.2 Deep Foundations

Deep foundations are also considered a viable foundation alternate. Several methods of deep foundation support were evaluated for this site. However, due to site specific conditions such as deep bedrock, potential for deeper subsurface voids and very dense overburden soils consisting of chert that are resistant to typical drilling methods, only two (2) deep foundation alternates have been recommended. The two (2) deep foundation system alternates include:

- Drilled piers bearing in dense natural overburden soils/chert or limestone bedrock; or
- Predrilled driven piling bearing in dense natural overburden soils/chert or limestone bedrock.

9.2.1 Drilled Piers

Foundation recommendations for each alternate are provided in the following sections. As previously mentioned, bedrock (limestone) was not encountered

within a depth of 30 ft. at the project site. Previous borings drilled by PPI for the adjacent Cherokee Nation Outpatient Health Center did not encounter limestone within 50 and possibly greater than 90 ft. at the project site. Since limestone is not anticipated to be encountered within a practical depth, drilled piers bearing in dense natural overburden soils/chert are recommended, if utilized for building support. Based upon the borings drilled at the project site, a minimum drilled pier depth of at least 25 ft. is recommended. Drilled pier depth will also be dictated by the required compressive load at each drilled pier and the amount of skin friction utilized in the design. The following subsections provide drilled pier recommendations.

9.2.2 Drilled Pier Design Recommendations

Description	Value
Foundation Type	Straight shaft drilled piers
Bearing Material[1]	Dense to very dense natural clayey chert or very stiff cherty clay overburden soils
Minimum Pier Penetration	25 ft. below existing finish grade elevation
Maximum Net Allowable Bearing Pressure[2]	20 ksf (overburden soils)
Maximum Allowable Skin Friction – Axial Compression[3]	1.0 ksf (overburden soils)
Maximum Allowable Skin Friction – Uplift[4]	1.0 ksf (overburden soils)
Group Effects – Axial Capacity	Piers should be installed with a center-to-center spacing of at least three (3) pier diameters. Group effects can be neglected and the total capacity of the pier group taken as the sum of the individual per capacities, provided that the adjacent piers are spaced at least three (3) pier diameters (center-to-center).
Group Effects – Lateral Capacity	When piers are installed close together, the lateral capacity of the group is not equivalent to the lateral capacity of an isolated individual pier times the number of piers in the group. Only those piers that are unobstructed by the other piers in the direction of the force develop full capacity. For pier groups with a pier spacing of three (3) pier diameters center-to-center, a multiplier of 0.8 should be used for the lead row of piers, 0.4 for the 2nd row and 0.3 for the 3rd and subsequent rows. The efficiency of the pier group is dependent upon the pier layout in the group, but would typically be on the order of 75 percent of a single pier for a pier spacing of three (3) pier diameters. The pier group effect increases significantly for closer spacing, resulting in lower efficiency.
Minimum Shaft Diameter[5]	30-inches
Minimum Grade Beam Bearing Depth	24-inches below final exterior adjacent grade
Estimated Total Settlement	1-inch or less
Estimated Differential Settlement	½-inch or less

1. **Due to variations in the depth and quality of the dense to very dense overburden soils across the site, the Geotechnical Engineer or his representative should be present during pier drilling to verify that unsuitable bearing strata is <u>not</u> present within the pier bottom.**
2. This is the pressure at the base of the foundation in excess of the adjacent overburden pressure. The allowable bearing pressure has a Factor of Safety of approximately 3.
3. The allowable skin friction has a Factor of Safety of approximately 2.
4. The allowable skin friction values have a Factor of Safety of approximately 2.
5. Sufficient steel reinforcement should be placed to provide adequate structural integrity.

9.2.3 Lateral Loading for Drilled Piers

It is anticipated that resistance of the foundations to lateral loading and the associated lateral deflection will be evaluated using finite difference computer models based on the horizontal modulus of subgrade reaction (K_h). The following values may be used in the analysis for this site.

Please note that the table states to ignore lateral support for the depth of 0 to 1 pier diameter or 2.5 ft., whichever is shallower. This notation is intended to account for the fact that near surface soils are significantly disturbed during drilled shaft excavation, which generally reduces the lateral support provided. Designers should use their judgment and make an appropriate reduction of soil strength parameters in this zone.

Values summarized in the table below are based upon published correlations and field and laboratory data collected during this subsurface investigation. **Values shown below are ultimate values representative of in-situ soil properties, and do not include a Factor of Safety.** These values may be used to compute resistance to lateral loading of the overburden soils. The appropriate Factor of Safety should be chosen by the designer.

Pier Depth	Unit Weight (pcf)	Static K_h (pci)	Cyclic K_h (pci)	e_{50}
*0-1 Pier Diameter	Ignore	-	-	-
*1 Pier Diameter to Bottom of Pier	125	1000	400	0.005
*Lateral parameters for the upper 1 pier diameter, or 2.5 ft., whichever is shallower, should be ignored.				

The above values were measured or based upon published correlations with anticipated soil strength and classification tests. **PPI can perform a site/structure specific lateral loading analysis once foundation type and loading has been determined, if desired.**

9.2.4 Drilled Pier Construction Recommendations

Drilled piers should have a straight shaft and should be founded at least 25 ft. below the existing ground surface bearing in dense to very dense natural

overburden soils/chert. **Overburden soils/chert are considered very resistant to typical auger methods. In any event, the drilled pier contractor should anticipate the use of rock augers, rock core barrels and potentially down the hole hammers with a heavy-duty drill rig in order to excavate the drilled piers to a minimum depth of at least 25 ft.**

Based upon the results of this investigation, the drilled pier contractor should be prepared to mobilize casing due to potential caving gravel and boulder sidewalls. Casing may be extracted as the shaft concrete is placed. Drilled pier bottoms should be well cleaned of all loose soil and rock fragments at the time of concrete placement. No more than 2 to 3 inches of water should be present in the bottom of piers when concrete is introduced into the shaft. **The drilled pier contractor should also anticipate minor to moderate concrete loss in small voids/cracks within the boulders and cobbles within the overburden soils, and/or possible large voids. Concrete over-run related to sloughing or caving of the shaft sidewalls should also be anticipated.**

9.2.5 Drilled Pier Load Test

An on-site load test of a production drilled pier is not considered a requirement. Isolated piers or pier groups may encounter differing conditions as compared to this report. It is recommended that the contractor bid form include a cost to perform such a load test in the event differing subsurface conditions are encountered during drilled pier installation. Pier load tests, if required, should be performed in accordance with ASTM D1143 and ASTM D3689 for compressive and tensile capacity.

9.3 Driven Piles

Another deep foundation alternate considered applicable at the project site is driven piling. Design recommendations for driven H-Piles are presented in the table below.

Description	Value
Foundation Type[1]	Steel H Piles w/End Protection
Bearing Material	Dense to very dense or stiff natural overburden soils/chert
Minimum Pile Penetration[2]	25 ft. below existing ground surface
Allowable Pile Capacity – Axial Compression	If driven to practical refusal, the allowable stress of the pile cross section controls the pile capacity. Compressive stress developed in the steel section should not exceed 9 kips per square inch (ksi) for 36 ksi grade steel and 12.5 ksi for 50 ksi grade steel sections.
Allowable Skin Friction – Uplift[3]	0.5 ksf (overburden soils)
Group Effects – Axial Capacity	Driven piles should be installed with a center-to-center spacing of at least three (3) pile widths. Group effects can be neglected and the total capacity of the pile group taken as the sum of the individual pile capacities provided that adjacent piles are spaced at least three (3) pile widths (center-to-center). Design of the piling as structural members should be in accordance with applicable building codes.
Group Effects – Lateral Capacity	When piles are installed close together, the lateral capacity of the group is not equivalent to the lateral capacity of an isolated individual pile times the number of piles in that group. Only those piles that are unobstructed by the other piles in the direction of the force develop full capacity. For pile groups with a pile spacing of three (3) pile widths center-to-center, a multiplier of 0.8 should be used for the lead row of piles, 0.4 for the 2nd row, and 0.3 for the 3rd and consecutive rows. The efficiency of the pile group is dependent upon the pile layout in the group, but would typically be on the order of 75 percent of a single pile for a pile spacing of three (3) pile widths. The pile group effect increases significantly for closer spacing, resulting in a lower efficiency.
Minimum Pile Cap & Grade Beam Bearing	24-inches below final exterior adjacent grade.
Estimated Total Settlement	1-inch or less
Estimated Differential Settlement	½-inch or less

1. Because of the relatively high driving resistance expected from the overburden soils/chert, steel H-piles with end protection are recommended so that the anticipated high driving stresses can be endured. Driven piles will develop their capacity from end bearing and side resistance in the very dense overburden soils below the pre-bore depth.
2. The pile should be driven to practical refusal, which should occur after penetrations of 1 to several feet into very dense overburden soils below the minimum 25 ft. of depth. We recommend that the pile installation be monitored by a representative of PPI.
3. The allowable skin friction has a Factor of Safety of approximately 2 and applies to the non-pre-bored depth only. Skin friction within the pre-bore depth should be ignored.

9.3.1 H-Pile Driving Criteria & Pre-Boring

Specifications for end bearing H-Piles should clearly state that end-bearing piles should be driven to refusal. Prior to driving structural steel piles, the contractor should review the boring logs to determine the depth at which impenetrable overburden soils may be anticipated. In addition, the contractor should submit a hammer wave equation to be evaluated and used during PDA testing (see below). The contractor should be attentive to the physical conditions associated with pile refusal. Pile refusal should be determined by on-site PDA testing. Pile refusal depth is anticipated to be highly variable. Pile refusal is anticipated to occur within approximately 5 ft. or less below the prebore depth due to very dense gravels encountered within the borings.

As stated above, pile driving refusal should be defined during PDA testing with an approved hammer. An approved hammer shall be defined as a hammer that develops the minimum hammer energy that is no less than any of the following:

1. 3.0 ft-lb/lb times the total pile weight in pounds, including mandrel, if used;
2. 32 ft-lb/kip times the minimum nominal axial compressive resistance in kips, divided by the pile batter factor, β, if applicable; and
3. 8,000 ft-lb.

In order to achieve full pile development and to ensure the pile reaches the intended very dense bearing stratum, pre-boring pile locations to a minimum depth of 25 ft. minimum is recommended. The pre-bored hole may be filled with sand prior to or following pile driving.

9.3.2 Driven Pile Construction Observation & PDA Testing

Construction surveillance activities should be provided throughout pile installation. Specific information regarding pile driving should be maintained in daily log form. The daily log form should include hammer type, energy, operating characteristics, driving time, delays, and other pertinent information. Complete pile driving records should be kept for the Project. Care should be exercised to monitor pile hammer operation to verify actual hammer energy.

In addition, PDA Testing (or dynamic load testing using a Pile Driving Analyzer) is recommended to confirm that damage to the pile has not occurred during driving, **and that the pile will carry the design load**. It is possible for piles to be driven down the side of a large chert boulder, resulting in pile deflection and subsequent damage. PDA testing would be especially useful in this case. A minimum of five (5) PDA tests or piles within a footprint of 50,000 sq. ft. is recommended spread over the structure footprint prior to production pile installation. A firm that has significant experience in PDA testing and that PPI has significant work experience with is listed below for your use, if desired.

Foundation Testing & Consulting, LLC
Mr. Casey Jones, P.E., P.G. - President
16500 Lucille Street
Overland Park, Kansas 66221
Ph: 913-626-8499
Email: cj@FTandC.com

9.3.3 Lateral Loadings for Driven Piles

The lateral loading parameters provided in Section 9.2.3 above may be used during foundation design utilizing driven piling.

9.4 Settlement Potential

Due to the overburden soils primarily consisting of dense to very dense chert sands, gravels, and occasional gravelly clays, settlement potential of the natural overburden soils is anticipated to be minimal. To essentially eliminate the potential for foundation settlement, foundations should bear in bedrock. However, due to the deep depth of limestone bedrock anticipated at this site, bearing upon bedrock is not considered practical. If shallow or deep foundations are constructed using the above foundation design parameters provided, total settlements on the order of 1-inch or less and differential settlements on the order of 0.5-inches or less are anticipated.

10.0 SEISMIC CONSIDERATIONS

Code Used	Site Classification
2015 International Building Code (IBC)[1]	C[2]
1. In general accordance with the *2015 International Building Code*, Section 1613 2. Based upon an average Shear Wave Velocity of 1,772 feet per second within the top 100 ft. of depth computed during site shear wave velocity testing performed on 1/15/19 by PPI.	

According to the 2015 IBC, the Mapped Spectral Response Acceleration parameters for short period (F_a) and the 1-second period (F_v) for the project site are presented below.

Mapped Spectral Response Parameter	F_a	F_v
Value	1.2	1.7
Values are based upon a Site Class C, S_s = 15.2%, S_1 = 8.1% using Tables 11.4 (1 & 2) from ASCE 7-10		

The seismic site classification presented above was determined using shear wave velocity testing. Shear wave velocity testing was performed along one (1) array, or line, situated within the southeast corner of the proposed building footprint. Shear wave velocity testing was performed in substantial conformance with industry standards using surface seismic methods, more specifically Multi-Channel Analysis of Surface Waves (MASW).

Surface waves are a type of seismic wave whose propagation is confined to the near surface medium. The depth of subsurface penetration of a surface wave is directly proportional to its wavelength. In a non-homogeneous medium, surface waves are dispersive, meaning each wavelength has a characteristic velocity resulting from subsurface heterogeneities.

MASW Combined Active and Passive method was utilized to obtain the average shear wave velocity for the top 100 ft. (Vs 100) at the project site. This method was selected to increase the range of frequency to be analyzed therefore increasing the depth of investigation. Active method captures a dispersion curve at relatively higher frequencies than the Passive method. Combing the dispersion curves for each method allows for a more reliable identification of the fundamental mode dispersion curve utilized in

calculating the shear wave velocity. Please refer to Figure 3 for the graphical shear wave velocity vs. depth output.

11.0 FLOOR SLABS

A slab-on-fill floor system is considered appropriate at the **north half** of the project site based upon subsurface conditions encountered and future site grading. Listed below are key considerations for design purposes of the floor slab.

- Prior to placement of controlled fill, if any, natural soils should be scarified, moisture content adjusted and re-compacted in accordance with Sections 8.0 of this report;
- Any fat clays containing little to no sand/gravel content present at slab subgrade elevation, if present, should be undercut and replaced in accordance with Section 8.7 above; and
- Prior to slab placement, soil moisture should be adjusted and maintained within the parameters specified in Section 8.0 of this report.

Placement of 4 or more inches of compacted free-draining granular base course below slabs is recommended to limit moisture rise through slabs and to improve slab support, particularly at joints. An impervious moisture barrier consisting of 6-mil plastic sheeting or equivalent should be provided in accordance with the 2012 IBC. Use of a 10-mil vapor barrier is recommended below all slab areas with an intended use sensitive to slab moisture.

11.1 Modulus of Subgrade Reaction

The floor slab by be designed with the modulus of subgrade reaction presented in the table below.

Bearing Material	Bearing Material Thickness (inches)	Modulus of Subgrade Reaction (pci)
LVC Fill Material and Natural Soils	N/A	175
Dense Graded Aggregate Base	6	275
Dense Graded Aggregate Base	12	350
Dense Graded Aggregate Base	18	425

12.0 BELOW GRADE SLABS

All slabs that are below exterior grade are considered below grade slabs. This condition is anticipated within the south half of the project site within the basement area. **In addition, any elevator pits, recessed mats, floor depressions, etc., are considered below grade slabs and the following recommendations do apply to these areas.**

Although shallow groundwater was not encountered within the borings drilled, site earthwork can, and often does, manipulate the shallow groundwater regime. In view of the possibility for perched groundwater at the project site, it is recommended that any portions of the structure below exterior grade, as described above, be designed and constructed recognizing the possibility of shallow groundwater. A French drain system should be installed under the below grade floor slabs to limit hydrostatic pressure below the slab. A drainage system constructed with coarse free-draining gravel with a minimum 6-inch thickness and perforated pipes wrapped in filter fabric and installed on 30-ft. centers below the free draining gravel is considered adequate. Groundwater collected by these perforated pipe drains should be removed to free discharge by gravity flow. If gravity flow cannot be provided a sump and pump system consisting of a wet well with a duplex pump arrangement is recommended. At least one (1) pump should turn on when groundwater levels are more than 24-inches below finish floor elevation.

A French drain should be installed underneath all below grade slabs. Lateral drain pipes installed on 30-ft. centers should be at least 4-inches in diameter, with perimeter collector pipes at least 6-inches in diameter. An impervious moisture barrier consisting of 6-mil. plastic sheeting or equivalent should be provided below all slab areas. A minimum 10-mil plastic sheeting is recommended beneath all slab areas with an intended use sensitive to slab moisture. Soil moisture should not be allowed to dry and desiccate or be saturated by inundation prior to slab placement.

12.1 Retaining Wall Backfill & Drainage

A foundation drain is recommended to be installed around the portion of the perimeter where the below grade slab is at or below exterior grade level in

accordance with Section 1805 of the 2015 IBC. Below grade wall backfill should consist of free-draining crushed stone or alternatively, may consist of gravelly clays or clayey gravels. Crushed stone, if selected, must be imported from a quarry source whereas on-site soils suitable for wall backfill could probably be segregated and stockpiled during excavation. Depending upon the type of backfill selected and degree of wall restraint, the following table of lateral earth pressures are considered appropriate for wall design. **If a building floor slab is planned over the wall backfill, use of an imported free draining stone should be separated from the earth face of the excavation by using a nonwoven filter fabric.**

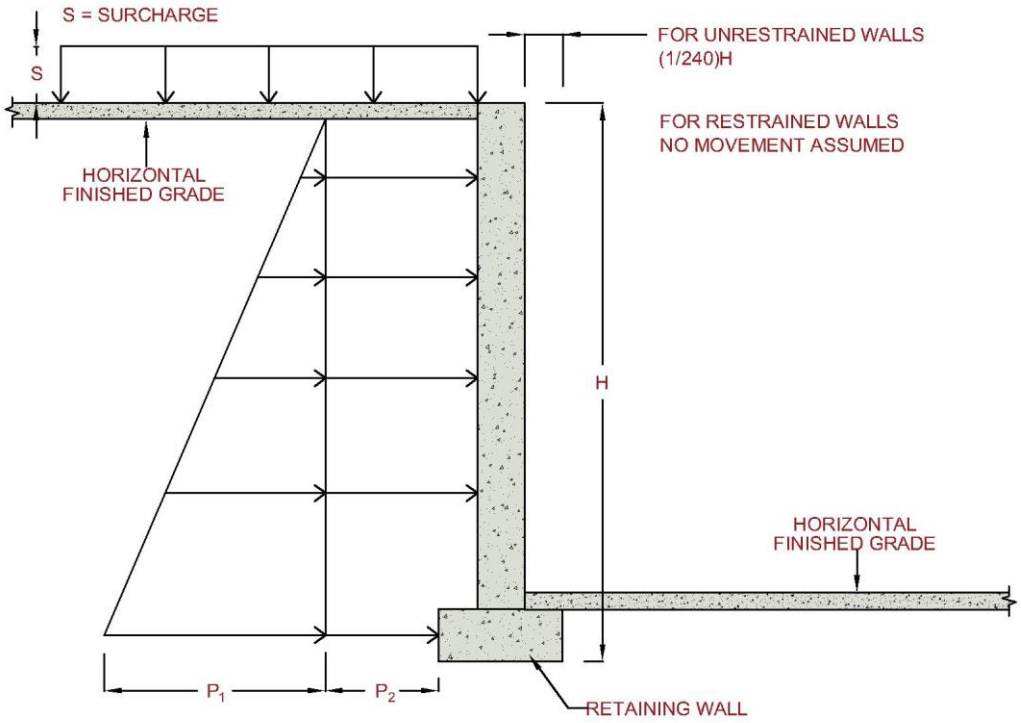

EQUIVALENT FLUID PRESSURES, P_1 (Drained Backfill Only)				
Type of Backfill	Level Backfill		Sloped Backfill (2H:1V)*	
	Restrained Walls (Using K_o)	Unrestrained Walls (Using K_a)	Restrained Walls (Using K_o)	Unrestrained Walls (Using K_a)
Compacted On-Site GC, GW, SC & CL Soils	70 pcf	45 pcf	80 pcf	55 pcf
Clean Crushed Stone	50 pcf	35 pcf	60 pcf	45 pcf
Rock Fill (Free-Draining)	50 pcf	35 pcf	60 pcf	45 pcf
*For backfill sloped other than 2H:1V, interpolate between values presented above for level and sloped backfill. NOTE: Structural design of unrestrained walls should permit wall rotation at top of wall equal to 1/240th of wall height.				

SURCHARGE PRESSURE, P_2		
Type of Backfill	Level Backfill	
	Restrained Walls (Using K_o)	Unrestrained Walls (Using K_a)
Compacted On-Site GC, GW, SC & CL Soils	0.58 (S)	0.38 (S)
Clean Crushed Stone	0.42 (S)	0.29 (S)
Rock Fill (Free-Draining)	0.42 (S)	0.29 (S)

If crushed stone backfill is selected and wall design in accordance with the above equivalent fluid pressures, the crushed stone backfill should be placed within a boundary projecting 30 degrees from the vertical commencing at a point 1 ft. out from the base of wall. Regardless of the backfill type selected, an impervious moisture barrier should be applied to the below grade wall. In addition, if lean clay backfill is selected, a geosynthetic drainage mat should be applied to the wall to assure removal of subsurface water. A perforated pipe should be laid at the base of wall to collect and remove subsurface water either from free-draining crushed stone or drainage mats. Flow line of the perforated pipe should be laid below partial basement finished floor. Again, groundwater collected should be removed by gravity

flow to free discharge. If this is not possible, groundwater may be removed by pumping. An exterior sump pit with dual pumping arrangement is recommended.

Please refer to Section 9.1 above for retaining wall foundation design parameters constructed in natural overburden soils or controlled fill material placed in accordance with Section 8.0 of this report.

13.0 SOIL CORROSIVITY

Bulk samples collected during drilling of previous borings adjacent to the site were tested for Oxidation Reduction Potential, Resistivity, Percent Solids, Sulfide, Chloride, Sulfate, Conductivity and pH were performed to determine corrosivity and resistivity of the soils at the project site. Results of this testing are presented in the table below:

Test	Results (2.5' to 6.5')	Method
Oxidation Reduction Potential (mV)	127	SM 2580 B-(2009)
Resistivity (ohm/cm)	3860	SM 2510 B-(1997)
Percent Solids (%)	89.1	SM 2540 G-(1997)
Sulfide	Absent	Commission Analytical Reactions
Chloride (mg/L)	Not Detected	EPA 300.0
Sulfate (mg/L)		EPA 300.0
Conductivity (µS/cm)	259	SM 2510 B-(1997)
pH (SU)	5.48	SM 4500-H+B-(2011)

Based upon the results of the corrosion and resistivity testing, the risk of sulfate and chloride exposure to concrete, reinforcing steel and other steel elements is minimal according to ACI guidelines. In general, the on-site soils are considered only slightly corrosive, mainly due to resistivity. Standard-of-practice regarding general protection against corrosion of buried metallic elements from slightly corrosive soils at this site is recommended. Based upon the above results, Type I or II cement is considered satisfactory for use at the project site.

14.0 PAVEMENT

It is anticipated that any new pavements associated with this project will be constructed of either an asphaltic concrete wearing surface placed over a base or a rigid Portland

Cement Concrete pavement over a granular base. Prior to pavement placement, preparation of the pavement subgrade should be performed in accordance with Section 8.0 of this report.

14.1 Flexible Pavement

If asphaltic paving is selected, the aggregate base may be a granular compacted crushed limestone with a gradation and quality conforming to the requirements of the Oklahoma Department of Transportation (ODOT), Standard Specification 703.01 for Type A aggregate. The maximum lift thickness for the granular base is 4 in. Granular base thicknesses in excess of 4 inches should be placed in multiple lifts with each lift being of approximately equal thickness. The granular base should be compacted to at least 100% of Standard Proctor Compaction (ASTM D-698).

Asphaltic concrete, both base and surface, should conform to the applicable requirements of ODOT Standard Specification 708. Asphaltic concrete should be compacted to 92 to 96% of Maximum Theoretical Specific Gravity (ASTM D-2041). Substitution of an appropriate Superpave Mix Design, SP 190C or SP 250C, can be used in place of the bituminous base. SP 190C or SP 125C may be used for the surface. All bituminous mix designs should have been prepared or verified within 6 months of the date of placement on the project.

14.2 Rigid Pavement

If rigid concrete paving is selected, a minimum 4-in. thickness granular base compacted to 100% of Standard Proctor should be placed on the prepared subgrade. The Portland Cement Concrete (PCC) mix should have a minimum 28-day compressive strength of 4000 pounds per square inch (psi). Concrete should be placed at a low slump (1 to 3 inches) and have an entrained air content of 5 to 7%. If an increased slump is desired, use of Super Plasticizer is recommended.

14.3 Pavement Subgrade CBR

Based upon the relatively high SPT-N values obtained during drilling, the natural soil deposits, as well as controlled fill originating from on-site should exhibit stiff

subgrades for pavement construction. A CBR value equal to 6.0 for the natural subgrade soils, or natural overburden soils that have been properly recompacted is recommended to be used in pavement design.

14.4 Pavement Thickness

Typical pavement design for this type of development would generally generate a Structural Number of 3.0 to 3.5 within heavy duty areas and 2.4 to 2.6 within light duty areas, depending on the subgrade conditions. The following table presents corresponding typical flexible and rigid pavement thickness using the general Structural Numbers.

Pavement Type	Anticipated Traffic Frequency	Asphaltic Surface (in.)	Asphaltic Base (in.)	Concrete Thickness (in.)	Aggregate Base (in.)
Flexible Pavement	Heavy Duty	3.0	4.0	-	6.0
	Medium Duty	2.0	3.0	-	6.0
	Light Duty	2.0	2.0	-	6.0
Rigid Pavement	Heavy Duty	-	-	7.0	4.0
	Medium Duty	-	-	6.0	4.0
	Light Duty	-	-	5.0	4.0

15.0 GROUND PENETRATING RADAR

As previously mentioned, subsurface voids have been documented immediately south and southeast of the project site encountered during construction of Hospital and Visitors Drive. In addition to the borings drilled during this investigation, performing ground penetrating radar (GPR) within the footprint of the proposed building footprint is recommended to potentially locate large shallow subsurface voids, if present. GPR should be performed following excavation within the building footprint as required to achieve proposed basement elevation and following removal of the existing fill material. PPI can perform these additional services if requested.

16.0 CONSTRUCTION OBSERVATION & TESTING

The construction process is an integral design component with respect to the geotechnical aspects of a project. Since geotechnical engineering is influenced by

variable depositional and weathering processes and because we sample only a small portion of the soils affecting the performance of the proposed structures, unanticipated or changed conditions can be disclosed during grading. Proper geotechnical observation and testing during construction is imperative to allow the Geotechnical Engineer the opportunity to evaluate assumptions made during the design process. Therefore, we recommend that PPI be kept apprised of design modifications and construction schedule of the proposed project to observe compliance with the design concepts and geotechnical recommendations, and to allow design changes in the event that subsurface conditions or methods of construction differ from those assumed while completing this study. We recommend that during construction all earthwork be monitored by a representative of PPI, including site preparation, placement of all engineered fill and trench backfill, and all foundation excavations as outlined below.

- An experienced Geotechnical Engineer or Engineering Technician of PPI should observe the subgrade throughout the proposed project site immediately following stripping to evaluate the native clay, identify areas requiring additional undercutting, and evaluate the suitability of the exposed surface for fill placement;
- An experienced Engineering Technician of PPI should monitor and test all fill placed within the building and pavement areas to determine whether the type of material, moisture content, and degree of compaction are within recommended limits. **Refer to Section 8.3 for recommendations regarding Field Density (compaction) testing frequency**;
- An experienced Technician or Engineer of PPI should observe and test all footing excavations. Where unsuitable bearing conditions are observed, remedial procedures can be established in the field to avoid construction delays; and
- The condition of the subgrade should be evaluated immediately prior to construction of the building floor slabs to determine whether the moisture content and relative density of the subgrade soils are as recommended.

17.0 REPORT LIMITATIONS

This report has been prepared in accordance with generally accepted practices of other consultants undertaking similar studies at the same time and in the same geographical area. Palmerton & Parrish, Inc. observed that degree of care and skill generally exercised by other consultants under similar circumstances and conditions. Palmerton & Parrish's findings and conclusions must be considered not as scientific certainties, but as opinions based on our professional judgment concerning the significance of the data gathered during the course of this investigation. Other than this, no warranty is implied or intended.

FIGURES

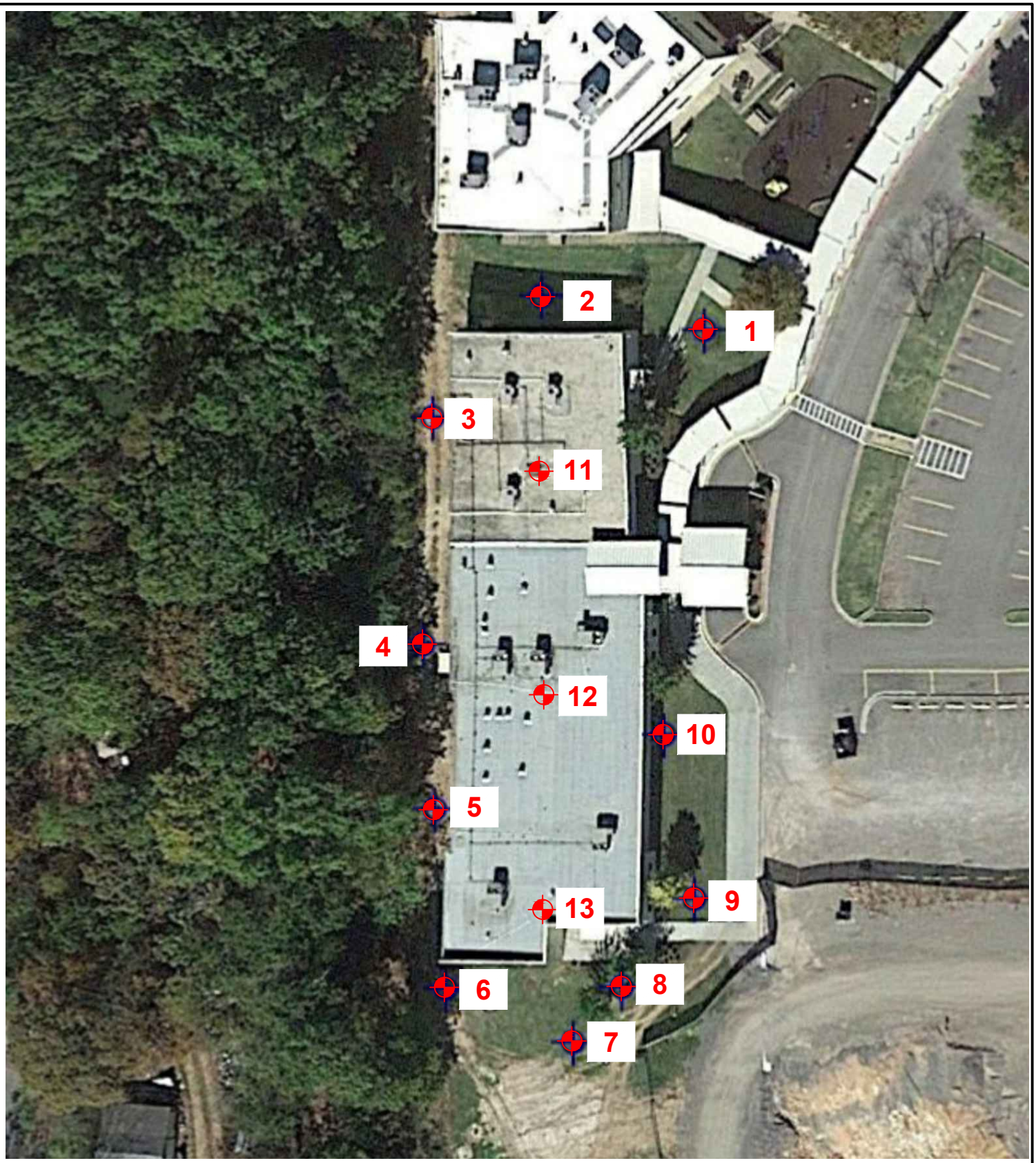

Note: Boring 4 not drilled due to unknown location of buried utilities

LEGEND

Boring Location

NTS

Project: Cherokee Nation OSU Building - Tahlequah, Oklahoma
Client: Childers Architect

Boring Location Plan

DATE: April 4, 2019

Project Number: 255932

PALMERTON & PARRISH, INC.
GEOTECHNICAL AND MATERIALS ENGINEERS/
MATERIALS TESTING LABORATORIES / ENVIRONMENTAL SERVICES

FIGURE 1

S:\ MASTER PROJECT FILE\2019\OK\C\Childers Arch-255932-Cherokee Nation OSU Bldg-Sub\Figures\Figure 1.dwg

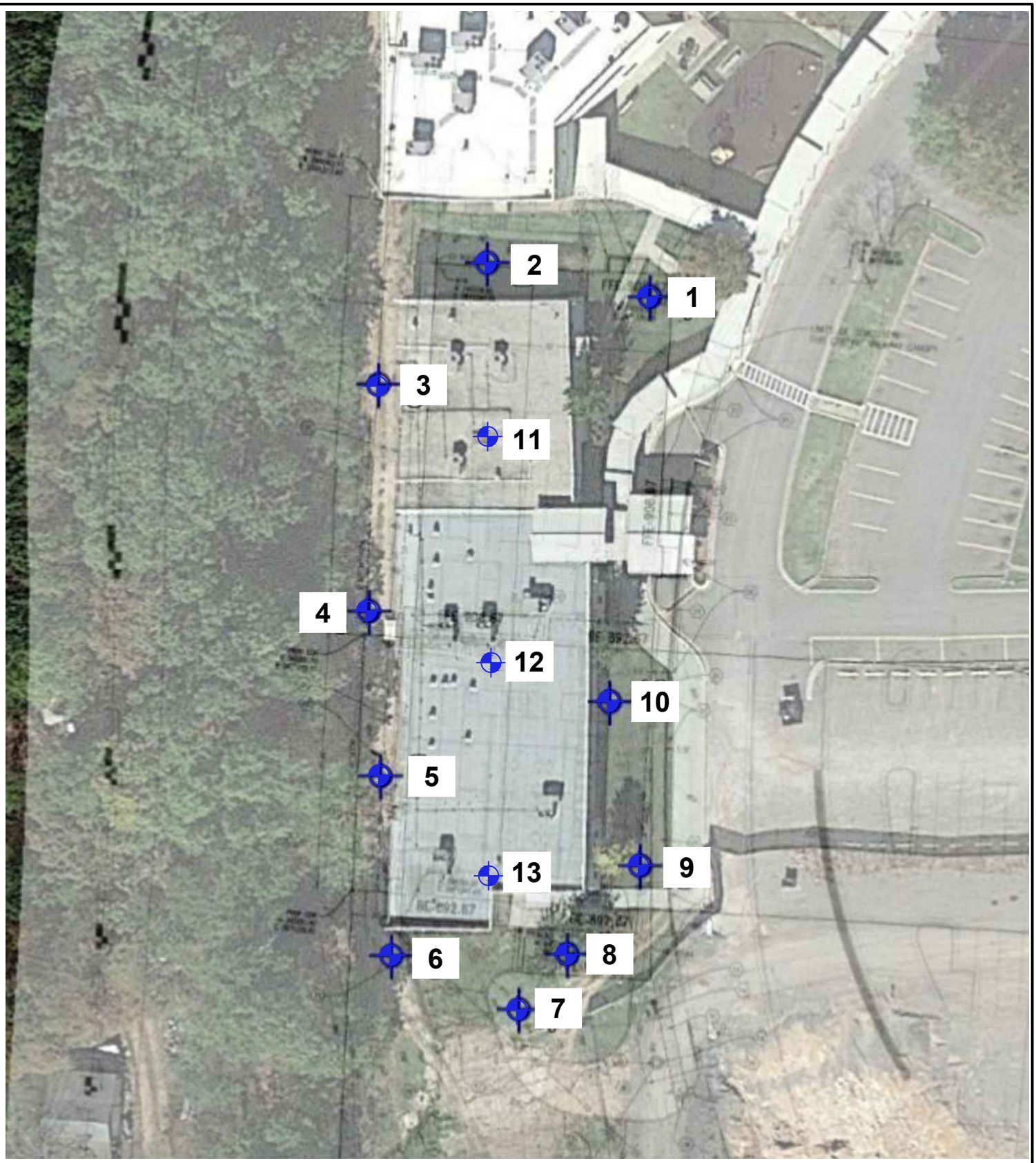

Note: Boring 4 not drilled due to unknown location of buried utilities

LEGEND

Boring Location

NTS

Project: Cherokee Nation OSU Building - Tahlequah, Oklahoma
Client: Childers Architect

Boring Location Plan - w/ Building Footprint

DATE: April 4, 2019

Project Number: 255932

PALMERTON & PARRISH, INC.
GEOTECHNICAL AND MATERIALS ENGINEERS/
MATERIALS TESTING LABORATORIES / ENVIRONMENTAL SERVICES

FIGURE 2

S:\ MASTER PROJECT FILE\2019\OK\C\Childers Arch-255932-Cherokee Nation OSU Bldg-Sub\Figures\Figures.dwg

Figure 3 - 1D Shear Wave Velocity Profile

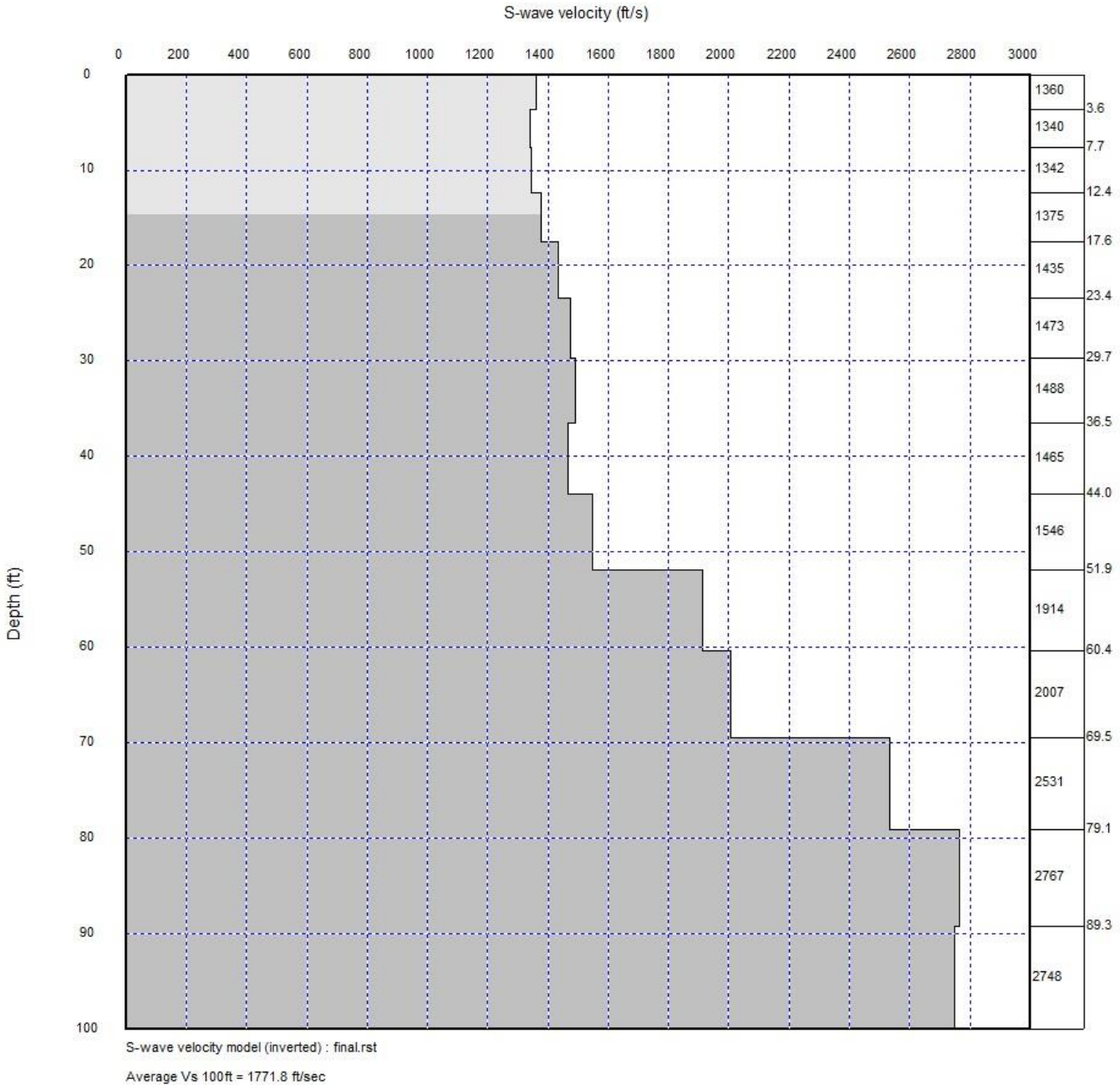

APPENDIX I

BORING LOGS & KEY TO SYMBOLS

4168 W. Kearney St.
Springfield, MO
Telephone: (417) 864-6000
Fax: (417) 864-6004

GEOTECHNICAL BORING LOG

BORING NUMBER 1

CLIENT Childers Architect
PROJECT NAME Cherokee Nation OSU Building
PROJECT NO. 255932
PROJECT LOCATION Tahlequah, OK
DATE STARTED 1/23/19 **COMPLETED** 1/23/19
SURFACE ELEVATION 905.8 ft **BENCHMARK EL.**
DRILLER MR **DRILL RIG** CME 1050
GROUND WATER LEVELS
HAMMER TYPE Auto
AT TIME OF DRILLING None
LOGGED BY BC **CHECKED BY** BP
AT END OF DRILLING
NOTES

DEPTH (ft)	DRILLING METHOD	STRATA SYMBOL	MATERIAL DESCRIPTION Unified Soil Classification System	SAMPLE TYPE NUMBER	RECOVERY % (RQD %)	CORRECTED BLOW COUNTS (N VALUE)	POCKET PEN. (tsf)	ELEVATION (ft)
0	ROTARY - 3 5/8" Tricone		TOPSOIL, Brown, Medium Stiff, Moist, Grass Covered (0.3 ft) CLAYEY CHERT GRAVEL, w/ Sand, Brown Tan, Medium Dense to Very Dense, Moist (GC)	SPT 1		13-15-16 (31)		905
				SPT 2		27-53-67/4"		
5			(5.5 ft) CHERT GRAVEL, COBBLES & BOULDERS, Brown, Tan & White, Very Dense, Slightly Moist	SPT 3		67/1"		900
				SPT 4		67/1"		
10			(9.5 ft) -Area of Possible Voids (8.75' to 9.5'). Water Loss During Drilling. CLAYEY CHERT GRAVEL, w/ Sand & Cobbles, Brown Tan, Dense to Very Dense, Moist (GC)	SPT 5		12-13-33 (46)		895
15								890
				SPT 6		28-36-16 (52)		
20								885
				SPT 7		13-11-21 (32)		
25			(28.5 ft)					880

DRY UNIT WT (pcf) 20 40 60 80 100
N VALUE 20 40 60 80
PL MC LL 20 40 60 80
SHEAR STRENGTH (ksf) 1 2 3 4

Bottom of borehole at 28.5 feet.

BORING LOG - PPI - PPI STD TEMPLATE.GDT - 4/4/19 10:39 - S:_MASTER PROJECT FILE\2019\OK\CHILDERS ARCH-255932-CHEROKEE NATION OSU BLDG-SUB\BORING LOGS\BORING LOGS.GPJ

4168 W. Kearney St.
Springfield, MO
Telephone: (417) 864-6000
Fax: (417) 864-6004

GEOTECHNICAL BORING LOG

BORING NUMBER 2

CLIENT Childers Architect
PROJECT NAME Cherokee Nation OSU Building
PROJECT NO. 255932
PROJECT LOCATION Tahlequah, OK
DATE STARTED 1/24/19 **COMPLETED** 1/24/19
SURFACE ELEVATION 903.3 ft **BENCHMARK EL.**
DRILLER MR **DRILL RIG** CME 1050
GROUND WATER LEVELS
HAMMER TYPE Auto
AT TIME OF DRILLING None
LOGGED BY BC **CHECKED BY** BP
AT END OF DRILLING
NOTES

DEPTH (ft)	DRILLING METHOD	STRATA SYMBOL	MATERIAL DESCRIPTION (Unified Soil Classification System)	SAMPLE TYPE NUMBER	RECOVERY % (RQD %)	CORRECTED BLOW COUNTS (N VALUE)	POCKET PEN. (tsf)	ELEVATION (ft)
0.0	ROTARY - 3 5/8" Tricone		TOPSOIL, Brown, Medium Stiff, Moist, Grass Covered					903.3
			0.5 ft CLAYEY CHERT GRAVEL, w/ Sand & Cobbles, Red Brown Tan, Medium Dense to Very Dense, Moist (GC)	SPT 1		7-16-65 (81)	1	
2.5				SPT 2		20-12-12 (24)		902.5
5.0			-Area of Possible Voids (6' to 7'). Water Loss During Drilling.	SPT 3		40-47-41 (88)		900.0
7.5			8.5 ft CHERT GRAVEL, COBBLES & BOULDERS, Brown, Tan & White, Very Dense, Slightly Moist	SPT 4		5-67/5"		897.5
			9.4 ft					895.0

Bottom of borehole at 9.4 feet.

DRY UNIT WT (pcf) 20 40 60 80 100
N VALUE 20 40 60 80
PL MC LL 20 40 60 80
SHEAR STRENGTH (ksf) 1 2 3 4

BORING LOG - PPI - PPI STD TEMPLATE.GDT - 4/4/19 10:39 - S:_MASTER PROJECT FILE\2019\OK\CHILDERS ARCH-255932-CHEROKEE NATION OSU BLDG-SUB\BORING LOGS\BORING LOGS.GPJ

4168 W. Kearney St.
Springfield, MO
Telephone: (417) 864-6000
Fax: (417) 864-6004

GEOTECHNICAL BORING LOG

BORING NUMBER 3

CLIENT Childers Architect
PROJECT NAME Cherokee Nation OSU Building
PROJECT NO. 255932
PROJECT LOCATION Tahlequah, OK
DATE STARTED 1/24/19 **COMPLETED** 1/24/19
SURFACE ELEVATION 900.9 ft **BENCHMARK EL.**
DRILLER MR **DRILL RIG** CME 1050
GROUND WATER LEVELS
HAMMER TYPE Auto
AT TIME OF DRILLING None
LOGGED BY BC **CHECKED BY** BP
AT END OF DRILLING
NOTES

DEPTH (ft)	DRILLING METHOD	STRATA SYMBOL	MATERIAL DESCRIPTION Unified Soil Classification System	SAMPLE TYPE NUMBER	RECOVERY % (RQD %)	CORRECTED BLOW COUNTS (N VALUE)	POCKET PEN. (tsf)	ELEVATION (ft)
0	ROTARY - 3 5/8" Tricone		FILL - GRAVELLY LEAN CLAY, Brown, Stiff, Moist (CL)					900
			2.5 ft	SPT 1		17-11-8 (19)		
			CLAYEY CHERT GRAVEL, w/ Sand & Cobbles, Brown Tan, Medium Dense to Very Dense, Moist (GC)	SPT 2		13-23-37 (60)		
5			5.5 ft CHERT GRAVEL, COBBLES & BOULDERS, w/ Occasional Stiff Fat Clay Layers, Red Brown, Tan & White, Dense to Very Dense, Moist	SPT 3		67/1"		895
				SPT 4		31-28-32 (60)		
10			-Area of Possible Voids (12' to 12.5'). Water Loss During Drilling.					890
				SPT 5		11-7-20 (27)		
15								885
				SPT 6		40-67/1"		
20								880
				SPT 7		33-48-47 (95)		
25								875
			28.5 ft Bottom of borehole at 28.5 feet.	SPT 8		67/1"		

DRY UNIT WT (pcf) 20 40 60 80 100
N VALUE 20 40 60 80
PL MC LL 20 40 60 80
SHEAR STRENGTH (ksf) 1 2 3 4

BORING LOG - PPI - PPI STD TEMPLATE.GDT - 4/4/19 10:39 - S:_MASTER PROJECT FILE\2019\OK\CHILDERS ARCH-255932-CHEROKEE NATION OSU BLDG-SUB\BORING LOGS\BORING LOGS.GPJ

4168 W. Kearney St.
Springfield, MO
Telephone: (417) 864-6000
Fax: (417) 864-6004

GEOTECHNICAL BORING LOG

BORING NUMBER 5

CLIENT Childers Architect
PROJECT NAME Cherokee Nation OSU Building
PROJECT NO. 255932
PROJECT LOCATION Tahlequah, OK
DATE STARTED 1/24/19 **COMPLETED** 1/24/19
SURFACE ELEVATION 896.21 ft **BENCHMARK EL.**
DRILLER MR **DRILL RIG** CME 1050
GROUND WATER LEVELS
HAMMER TYPE Auto
AT TIME OF DRILLING None
LOGGED BY BC **CHECKED BY** BP
AT END OF DRILLING
NOTES

DEPTH (ft)	DRILLING METHOD	STRATA SYMBOL	MATERIAL DESCRIPTION Unified Soil Classification System	SAMPLE TYPE NUMBER	RECOVERY % (RQD %)	CORRECTED BLOW COUNTS (N VALUE)	POCKET PEN. (tsf)	ELEVATION (ft)
0	ROTARY - 3 5/8" Tricone		FILL - CLAYEY CHERT GRAVEL, Red Tan, Dense Moist (GC)	SPT 1		16-19-13 (32)		895
			1.0 ft CLAYEY CHERT GRAVEL, w/ Sand & Cobbles, Brown Tan, Medium Dense to Very Dense, Moist (GC)					
5				SPT 2		29-27-36 (63)		890
				SPT 3		67/1"		
				SPT 4		13-8-13 (21)		
10			-Area of Possible Voids (11.5' to 12.5'). Water Loss During Drilling.					885
				SPT 5		20-23-23 (46)		
15			17.0 ft CHERT GRAVEL, COBBLES & BOULDERS, w/ Occasional Stiff Fat Clay Layers, Red Brown, Tan & White, Dense to Very Dense, Moist					880
				SPT 6		27-60-47 (107)		
20			23.5 ft Bottom of borehole at 23.5 feet.					875

DRY UNIT WT (pcf) 20 40 60 80 100
N VALUE 20 40 60 80
PL MC LL 20 40 60 80
SHEAR STRENGTH (ksf) 1 2 3 4

BORING LOG - PPI - PPI STD TEMPLATE.GDT - 4/4/19 10:39 - S:_MASTER PROJECT FILE\2019\OK\CHILDERS ARCH-255932-CHEROKEE NATION OSU BLDG-SUB\BORING LOGS\BORING LOGS.GPJ

4168 W. Kearney St.
Springfield, MO
Telephone: (417) 864-6000
Fax: (417) 864-6004

GEOTECHNICAL BORING LOG

BORING NUMBER 6

CLIENT Childers Architect
PROJECT NAME Cherokee Nation OSU Building
PROJECT NO. 255932
PROJECT LOCATION Tahlequah, OK
DATE STARTED 1/24/19 **COMPLETED** 1/24/19
SURFACE ELEVATION 895.03 ft **BENCHMARK EL.**
DRILLER MR **DRILL RIG** CME 1050
GROUND WATER LEVELS
HAMMER TYPE Auto
AT TIME OF DRILLING None
LOGGED BY BC **CHECKED BY** BP
AT END OF DRILLING
NOTES

DEPTH (ft)	DRILLING METHOD	STRATA SYMBOL	MATERIAL DESCRIPTION Unified Soil Classification System	SAMPLE TYPE NUMBER	RECOVERY % (RQD %)	CORRECTED BLOW COUNTS (N VALUE)	POCKET PEN. (tsf)	ELEVATION (ft)
0	ROTARY - 3 5/8" Tricone		CLAYEY CHERT GRAVEL, w/ Sand, Brown Tan, Medium Dense, Moist (GC)	SPT 1		13-16-12 (28)		895
				SPT 2		13-27-40 (67)		
5			5.5 ft CHERT GRAVEL, COBBLES & BOULDERS, w/ Occasional Stiff Fat Clay Layers, Red Brown, Tan & White, Very Dense, Slightly Moist	SPT 3		67/5"		890
				SPT 4		67/4"		
10			-Area of Possible Voids (12' to 13'). Water Loss During Drilling.					885
			13.5 ft FAT CLAY, Trace Gravel, Red Tan, Very Stiff, Moist (CH)	SPT 5		8-8-13 (21)	3	
15			16.0 ft CHERT GRAVEL, COBBLES & BOULDERS, w/ Occasional Stiff Fat Clay Layers, Red Brown, Tan & White, Very Dense, Slightly Moist	SPT 6		67/3"		880
20								875
				SPT 7		29-47-33 (80)	2.25	
25								870
			28.7 ft Bottom of borehole at 28.7 feet.	SPT 8		67/2"		

DRY UNIT WT (pcf) 20 40 60 80 100
N VALUE 20 40 60 80
PL MC LL 20 40 60 80
SHEAR STRENGTH (ksf) 1 2 3 4

BORING LOG - PPI - PPI STD TEMPLATE.GDT - 4/4/19 10:39 - S:_MASTER PROJECT FILE\2019\OK\CHILDERS ARCH-255932-CHEROKEE NATION OSU BLDG-SUB\BORING LOGS\BORING LOGS.GPJ

4168 W. Kearney St.
Springfield, MO
Telephone: (417) 864-6000
Fax: (417) 864-6004

GEOTECHNICAL BORING LOG

BORING NUMBER 7

CLIENT Childers Architect
PROJECT NAME Cherokee Nation OSU Building
PROJECT NO. 255932
PROJECT LOCATION Tahlequah, OK
DATE STARTED 1/23/19 **COMPLETED** 1/23/19
SURFACE ELEVATION 900.7 ft **BENCHMARK EL.**
DRILLER MR **DRILL RIG** CME 1050
GROUND WATER LEVELS
HAMMER TYPE Auto
AT TIME OF DRILLING None
LOGGED BY BC **CHECKED BY** BP
AT END OF DRILLING
NOTES

DEPTH (ft)	DRILLING METHOD	STRATA SYMBOL	MATERIAL DESCRIPTION (Unified Soil Classification System)	SAMPLE TYPE NUMBER	RECOVERY % (RQD %)	CORRECTED BLOW COUNTS (N VALUE)	POCKET PEN. (tsf)	ELEVATION (ft)
0.0	ROTARY - 3 5/8" Tricone		FILL - CLAYEY CHERT GRAVEL, w/ Sand, Brown, Dense, Moist (GC)	SPT 1		7-25-19 (44)	2.25	900.0
1.0 ft			CLAYEY CHERT GRAVEL, w/ Sand, Brown Tan, Very Dense, Moist (GC)					
2.5				SPT 2		20-21-45 (66)		897.5
5.0								
6.0 ft			CHERT GRAVEL, COBBLES & BOULDERS, w/ Occasional Stiff Fat Clay Layers, Red Brown, Tan & White, Dense to Very Dense, Moist	SPT 3		67/1"		895.0
7.5			-Area of Possible Voids (6.75' to 7.75'). Water Loss During Drilling.					
8.5 ft			CLAYEY CHERT GRAVEL, w/ Sand, Brown Tan, Very Dense, Moist (GC)	SPT 4		40-40-25 (65)		892.5
10.0 ft								
10.0			Bottom of borehole at 10.0 feet.					

DRY UNIT WT (pcf) ◆ 20 40 60 80 100
▲ N VALUE ▲ 20 40 60 80
PL MC LL 20 40 60 80
SHEAR STRENGTH (ksf) ■ 1 2 3 4

BORING LOG - PPI - PPI STD TEMPLATE.GDT - 4/4/19 10:39 - S:_MASTER PROJECT FILE\2019\OK\CHILDERS ARCH-255932-CHEROKEE NATION OSU BLDG-SUB\BORING LOGS\BORING LOGS.GPJ

4168 W. Kearney St.
Springfield, MO
Telephone: (417) 864-6000
Fax: (417) 864-6004

GEOTECHNICAL BORING LOG

BORING NUMBER 8

CLIENT Childers Architect
PROJECT NAME Cherokee Nation OSU Building
PROJECT NO. 255932
PROJECT LOCATION Tahlequah, OK
DATE STARTED 1/23/19 **COMPLETED** 1/23/19
SURFACE ELEVATION 903.3 ft **BENCHMARK EL.**
DRILLER MR **DRILL RIG** CME 1050
GROUND WATER LEVELS
HAMMER TYPE Auto
AT TIME OF DRILLING None
LOGGED BY BC **CHECKED BY** BP
AT END OF DRILLING
NOTES

DEPTH (ft)	DRILLING METHOD	STRATA SYMBOL	MATERIAL DESCRIPTION Unified Soil Classification System	SAMPLE TYPE NUMBER	RECOVERY % (RQD %)	CORRECTED BLOW COUNTS (N VALUE)	POCKET PEN. (tsf)	ELEVATION (ft)
0	ROTARY - 3 5/8" Tricone		CLAYEY CHERT GRAVEL, Brown, Medium Dense, Moist (GC)	SPT 1		4-11-11 (22)	1.25	
			1.0 ft CLAYEY CHERT GRAVEL, w/ Sand, Brown Tan, Very Dense, Moist (GC)					
				SPT 2		12-43-64 (107)		900
5			6.0 ft CHERT GRAVEL, COBBLES & BOULDERS, w/ Occasional Stiff Fat Clay Layers, Red Brown, Tan & White, Very Dense, Slightly Moist					
				SPT 3		40-67/4"		895
10								
			-Area of Possible Voids (13' to 13.5'). Water Loss During Drilling.					890
			14.0 ft CLAYEY CHERT GRAVEL, w/ Sand, Brown Tan, Very Dense, Moist (GC)	SPT 4		8-7-13 (20)		
15								
				SPT 5		13-33-31 (64)	1	885
20								
				SPT 6		17-53-25 (78)	2	880
25								
			28.6 ft Bottom of borehole at 28.6 feet.	SPT 7		67/1"		875

DRY UNIT WT (pcf) 20 40 60 80 100
N VALUE 20 40 60 80
PL MC LL 20 40 60 80
SHEAR STRENGTH (ksf) 1 2 3 4

BORING LOG - PPI - PPI STD TEMPLATE.GDT - 4/4/19 10:39 - S:_MASTER PROJECT FILE\2019\OK\CHILDERS ARCH-255932-CHEROKEE NATION OSU BLDG-SUB\BORING LOGS\BORING LOGS.GPJ

4168 W. Kearney St.
Springfield, MO
Telephone: (417) 864-6000
Fax: (417) 864-6004

GEOTECHNICAL BORING LOG

BORING NUMBER 9

CLIENT Childers Architect
PROJECT NAME Cherokee Nation OSU Building
PROJECT NO. 255932
PROJECT LOCATION Tahlequah, OK
DATE STARTED 1/22/19 **COMPLETED** 1/22/19
SURFACE ELEVATION 903.0 ft **BENCHMARK EL.**
DRILLER MR **DRILL RIG** CME 1050
GROUND WATER LEVELS
HAMMER TYPE Auto
AT TIME OF DRILLING None
LOGGED BY BC **CHECKED BY** BP
AT END OF DRILLING
NOTES

DEPTH (ft)	DRILLING METHOD	STRATA SYMBOL	MATERIAL DESCRIPTION Unified Soil Classification System	SAMPLE TYPE NUMBER	RECOVERY % (RQD %)	CORRECTED BLOW COUNTS (N VALUE)	POCKET PEN. (tsf)	ELEVATION (ft)
0	ROTARY - 3 5/8" Tricone		FILL - LEAN CLAY, w/ Gravel, Brown, Stiff, Moist (CL) 1.0 ft CLAYEY CHERT GRAVEL, w/ Sand, Brown Tan, Very Dense, Moist (GC)	SPT 1		20-13-1 (14)		
				SPT 2		17-40-21 (61)		900
5			5.5 ft CHERT GRAVEL, COBBLES & BOULDERS, w/ Occasional Stiff Fat Clay Layers, Red Brown, Tan & White, Very Dense, Slightly Moist	SPT 3		67/1"		
			-Area of Possible Voids (7.75' to 8'). Water Loss During Drilling.	SPT 4		23-17-9 (26)		895
10								
				SPT 5		67/4"		890
15			17.0 ft CLAYEY CHERT SAND, w/ Gravel, Red Tan, Very Dense, Moist (SC)	SPT 6		40-64-40 (104)		885
20			22.0 ft FAT CLAY, Scattered Chert Layers, Red Tan, Stiff, Moist (CH)	SPT 7		7-4-8 (12)	1	880
25								
			29.5 ft	SPT 8		4-5-4 (9)		875

Bottom of borehole at 29.5 feet.

DRY UNIT WT (pcf) 20 40 60 80 100
N VALUE 20 40 60 80
PL MC LL 20 40 60 80
SHEAR STRENGTH (ksf) 1 2 3 4

BORING LOG - PPI - PPI STD TEMPLATE.GDT - 4/4/19 10:39 - S:_MASTER PROJECT FILE\2019\OK\CHILDERS ARCH-255932-CHEROKEE NATION OSU BLDG-SUB\BORING LOGS\BORING LOGS.GPJ

4168 W. Kearney St.
Springfield, MO
Telephone: (417) 864-6000
Fax: (417) 864-6004

GEOTECHNICAL BORING LOG

BORING NUMBER 10

CLIENT Childers Architect
PROJECT NAME Cherokee Nation OSU Building
PROJECT NO. 255932
PROJECT LOCATION Tahlequah, OK
DATE STARTED 1/21/19 **COMPLETED** 1/22/19
SURFACE ELEVATION 904.2 ft **BENCHMARK EL.**
DRILLER MR **DRILL RIG** CME 1050
GROUND WATER LEVELS
HAMMER TYPE Auto
AT TIME OF DRILLING None
LOGGED BY BC **CHECKED BY** BP
AT END OF DRILLING
NOTES

DEPTH (ft)	DRILLING METHOD	STRATA SYMBOL	MATERIAL DESCRIPTION (Unified Soil Classification System)	SAMPLE TYPE NUMBER	RECOVERY % (RQD %)	CORRECTED BLOW COUNTS (N VALUE)	POCKET PEN. (tsf)	ELEVATION (ft)
0	ROTARY - 3 5/8" Tricone		FILL - LEAN CLAY, Scattered Gravel, Brown, Stiff, Moist (CL)	SPT 1		4-8-8 (16)	2.25	
			1.0 ft CLAYEY CHERT GRAVEL, w/ Sand, Brown Tan, Very Dense, Moist (GC)	SPT 2		15-19-25 (44)		900
5			-Area of Possible Voids (5' to 6'). Water Loss During Drilling.	SPT 3		9-11-17 (28)		
				SPT 4		40-13-23 (36)		895
10			11.5 ft CHERT GRAVEL, COBBLES & BOULDERS, w/ Occasional Stiff Fat Clay Layers, Red Brown, Tan & White, Very Dense, Slightly Moist	SPT 5		67/3"		890
15				SPT 6		67/2"		885
20			-Area of Possible Voids (20' to 22'). Water Loss During Drilling.					
			22.5 ft FAT CLAY, Scattered Gravel, Red Tan, Stiff, Moist (CH)	SPT 7		8-8-8 (16)	1.5	880
25								
			30.0 ft	SPT 8		8-8-23 (31)	2	875
30			Bottom of borehole at 30.0 feet.					

DRY UNIT WT (pcf) 20 40 60 80 100
N VALUE 20 40 60 80
PL MC LL 20 40 60 80
SHEAR STRENGTH (ksf) 1 2 3 4

BORING LOG - PPI - PPI STD TEMPLATE.GDT - 4/4/19 10:39 - S:_MASTER PROJECT FILE\2019\OK\CHILDERS ARCH-255932-CHEROKEE NATION OSU BLDG-SUB\BORING LOGS\BORING LOGS.GPJ

4168 W. Kearney St.
Springfield, MO
Telephone: (417) 864-6000
Fax: (417) 864-6004

GEOTECHNICAL BORING LOG

BORING NUMBER 11

CLIENT Childers Architect
PROJECT NAME Cherokee Nation OSU Building
PROJECT NO. 255932
PROJECT LOCATION Tahlequah, OK
DATE STARTED 3/27/19 **COMPLETED** 3/27/19
SURFACE ELEVATION 904.7 ft **BENCHMARK EL.**
DRILLER MR **DRILL RIG** CME 1050
GROUND WATER LEVELS
HAMMER TYPE Auto
AT TIME OF DRILLING None
LOGGED BY TB **CHECKED BY** BP
AT END OF DRILLING
NOTES

DEPTH (ft)	DRILLING METHOD	STRATA SYMBOL	MATERIAL DESCRIPTION Unified Soil Classification System	SAMPLE TYPE NUMBER	RECOVERY % (RQD %)	CORRECTED BLOW COUNTS (N VALUE)	POCKET PEN. (tsf)	ELEVATION (ft)
0	HSA - 4.25" I.D.		FILL - CLAYEY SAND, w/ Gravel, Brown, Medium Dense, Moist (SC)	SPT 1		9-11-8 (19)		
				SPT 2		7-8-27 (35)		
5			5.0 ft CLAYEY CHERT GRAVEL, w/ Sand, Brown Tan Red, Very Dense, Moist (GC)	SPT 3		48-25-41 (66)		900
			8.5 ft CHERT GRAVEL, COBBLES & BOULDERS, w/ Occasional Stiff Fat Clay Layers, Red Brown, Tan & White, Medium Dense to Very Dense, Slightly Moist	SPT 4		44-44-53 (97)		
10								895
				SPT 5		12-15-67 (82)		
15	ROTARY - 3 5/8" Tricone		-Area of Possible Voids (17' to 18.5'). Water Loss During Drilling.					890
				SPT 6		9-67/4"		
20								885
				SPT 7		9-8-11 (19)		
25								880
			30.0 ft	SPT 8		16-67/5"		
30			Bottom of borehole at 30.0 feet.					875

DRY UNIT WT (pcf) 20 40 60 80 100
N VALUE 20 40 60 80
PL MC LL 20 40 60 80
SHEAR STRENGTH (ksf) 1 2 3 4

BORING LOG - PPI - PPI STD TEMPLATE.GDT - 4/4/19 10:39 - S:_MASTER PROJECT FILE\2019\OK\CHILDERS ARCH-255932-CHEROKEE NATION OSU BLDG-SUB\BORING LOGS\BORING LOGS.GPJ

4168 W. Kearney St.
Springfield, MO
Telephone: (417) 864-6000
Fax: (417) 864-6004

GEOTECHNICAL BORING LOG

BORING NUMBER 12

CLIENT Childers Architect
PROJECT NAME Cherokee Nation OSU Building
PROJECT NO. 255932
PROJECT LOCATION Tahlequah, OK
DATE STARTED 3/27/19 **COMPLETED** 3/28/19
SURFACE ELEVATION 905.1 ft **BENCHMARK EL.**
DRILLER MR **DRILL RIG** CME 1050
GROUND WATER LEVELS
HAMMER TYPE Auto
AT TIME OF DRILLING None
LOGGED BY TB **CHECKED BY** BP
AT END OF DRILLING
NOTES

DEPTH (ft)	DRILLING METHOD	STRATA SYMBOL	MATERIAL DESCRIPTION (Unified Soil Classification System)	SAMPLE TYPE NUMBER	RECOVERY % (RQD %)	CORRECTED BLOW COUNTS (N VALUE)	POCKET PEN. (tsf)	ELEVATION (ft)
0	HSA - 4.25" I.D.		FILL - CLAYEY GRAVEL, w/ Sand, Brown, Dense, Moist (GC)	SPT 1		9-19-17 (36)		905
			4.0 ft CLAYEY CHERT GRAVEL, w/ Sand, Brown Tan Red, Very Dense, Moist (GC)	SPT 2		33-24-35 (59)		
5				SPT 3		17-33-37 (70)		900
				SPT 4		37-40-67/2"		
10			12.0 ft CHERT GRAVEL, COBBLES & BOULDERS, w/ Occasional Stiff Fat Clay Layers, Red Brown, Tan & White, Medium Dense to Very Dense, Slightly Moist	SPT 5		67/2"		895
15	ROTARY - 3 5/8" Tricone		-Area of Possible Voids (17.5' to 18'). Water Loss During Drilling.	SPT 6		20-33-67/4"		890
20				SPT 7		48-61-67/4"		885
25								880
			30.0 ft	SPT 8		5-8-11 (19)		
30			Bottom of borehole at 30.0 feet.					

DRY UNIT WT (pcf) 20 40 60 80 100
N VALUE 20 40 60 80
PL MC LL 20 40 60 80
SHEAR STRENGTH (ksf) 1 2 3 4

BORING LOG - PPI - PPI STD TEMPLATE.GDT - 4/4/19 10:39 - S:_MASTER PROJECT FILE\2019\OK\CHILDERS ARCH-255932-CHEROKEE NATION OSU BLDG-SUB\BORING LOGS\BORING LOGS.GPJ

4168 W. Kearney St.
Springfield, MO
Telephone: (417) 864-6000
Fax: (417) 864-6004

GEOTECHNICAL BORING LOG

BORING NUMBER 13

CLIENT Childers Architect
PROJECT NAME Cherokee Nation OSU Building
PROJECT NO. 255932
PROJECT LOCATION Tahlequah, OK
DATE STARTED 3/28/19 **COMPLETED** 3/29/19
SURFACE ELEVATION 903.1 ft **BENCHMARK EL.**
DRILLER MR **DRILL RIG** CME 1050
GROUND WATER LEVELS
HAMMER TYPE Auto
AT TIME OF DRILLING None
LOGGED BY TB **CHECKED BY** BP
AT END OF DRILLING
NOTES

DEPTH (ft)	DRILLING METHOD	STRATA SYMBOL	MATERIAL DESCRIPTION (Unified Soil Classification System)	SAMPLE TYPE NUMBER	RECOVERY % (RQD %)	CORRECTED BLOW COUNTS (N VALUE)	POCKET PEN. (tsf)	ELEVATION (ft)
0	HSA - 4.25" I.D.		FILL - CLAYEY GRAVEL, w/ Sand, Brown, Dense, Moist (GC)	SPT 1		8-13-17 (30)		
			4.0 ft					900
			CLAYEY CHERT GRAVEL, w/ Sand, Brown Tan Red, Medium Dense, Moist (GC)	SPT 2		9-8-13 (21)		
5								
				SPT 3		31-17-15 (32)		895
10								
			12.0 ft					
			CHERT GRAVEL, COBBLES & BOULDERS, w/ Occasional Stiff Fat Clay Layers, Red Brown, Tan & White, Very Dense, Slightly Moist	SPT 4		67/2"		890
15			16.0 ft					
			CLAYEY CHERT GRAVEL, w/ Sand, Brown Tan Red, Medium Dense to Very Dense, Moist (GC)	SPT 5		1-7-5 (12)		885
20								
				SPT 6		67/1"		880
25								
								875
			30.0 ft	SPT 7		8-12-17 (29)		
30			Bottom of borehole at 30.0 feet.					

DRY UNIT WT (pcf) 20 40 60 80 100
N VALUE 20 40 60 80
PL MC LL 20 40 60 80
SHEAR STRENGTH (ksf) 1 2 3 4

BORING LOG - PPI - PPI STD TEMPLATE.GDT - 4/4/19 10:39 - S:_MASTER PROJECT FILE\2019\OK\CHILDERS ARCH-255932-CHEROKEE NATION OSU BLDG-SUB\BORING LOGS\BORING LOGS.GPJ

4168 W. Kearney St.
Springfield, MO
Telephone: (417) 864-6000
Fax: (417) 864-6004

KEY TO SYMBOLS

CLIENT Childers Architect **PROJECT NAME** Cherokee Nation OSU Building

PROJECT NO. 255932 **PROJECT LOCATION** Tahlequah, OK

LITHOLOGIC SYMBOLS
(Unified Soil Classification System)


CH: USCS High Plasticity Clay


CHERT: Chert


FILL: Fill (made ground)


GC: USCS Clayey Gravel


TOPSOIL: Topsoil

SAMPLER SYMBOLS


Standard Penetration Test

WELL CONSTRUCTION SYMBOLS

ABBREVIATIONS

LL - LIQUID LIMIT (%)
PI - PLASTIC INDEX (%)
W - MOISTURE CONTENT (%)
DD - DRY DENSITY (PCF)
NP - NON PLASTIC
-200 - PERCENT PASSING NO. 200 SIEVE
PP - POCKET PENETROMETER (TSF)

TV - TORVANE
PID - PHOTOIONIZATION DETECTOR
UC - UNCONFINED COMPRESSION
ppm - PARTS PER MILLION


Water Level at Time Drilling, or as Shown


Water Level at End of Drilling, or as Shown


Water Level After 24 Hours, or as Shown

KEY TO SYMBOLS - PPI STD TEMPLATE.GDT - 1/29/19 15:19 - S:_MASTER PROJECT FILE\2019\OK\C\CHILDERS ARCH-255932-CHEROKEE NATION OSU BLDG-SUB\BORING LOGS\BORING LOGS.GPJ

APPENDIX II

GENERAL NOTES

PALMERTON & PARRISH, INC.

GENERAL NOTES

SOIL PROPERTIES & DESCRIPTIONS

COHESIVE SOILS

Consistency	Unconfined Compressive Strength (Qu)	Pocket Penetrometer Strength	N-Value
	(psf)	(tsf)	(blows/ft)
Very Soft	<500	<0.25	0-1
Soft	500-1000	0.25-0.50	2-4
Medium Stiff	1001-2000	0.50-1.00	5-8
Stiff	2001-4000	1.00-2.00	9-15
Very Stiff	4001-8000	2.00-4.00	16-30
Hard	>8000	>4.00	31-60
Very Hard			>60

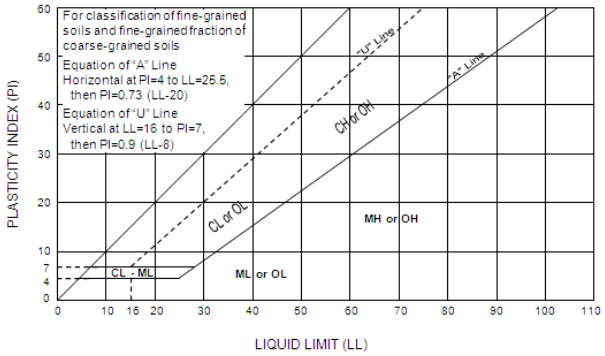

Group Symbol	Group Name
CL –	Lean Clay
ML –	Silt
OL –	Organic Clay or Silt
CH –	Fat Clay
MH –	Elastic Silt
OH –	Organic Clay or Silt
PT –	Peat
CL-CH –	Lean to Fat Clay

Plasticity		Moisture	
Description	Liquid Limit (LL)	Descriptive Term	Guide
Lean	<45%	Dry	No indication of water
Lean to Fat	45-49%	Moist	Indication of water
Fat	≥50%	Wet	Visible water

Fine Grained Soil Subclassification	Percent (by weight) of Total Sample
Terms: SILT, LEAN CLAY, FAT CLAY, ELASTIC SILT	PRIMARY CONSTITUENT
Sandy,gravelly, abundant cobbles, abundant boulders	>30-50]
with sand, with gravel, with cobbles, with boulders	>15-30] – secondary coarse grained constituents
scattered sand, scattered gravel, scattered cobbles, scattered boulders	5-15]
a trace sand, a trace gravel, a few cobbles, a few boulders	<5]
The relationship of clay and silt constituents is based on plasticity and normally determined by performing index tests. Refined classifications are based on Atterberg Limits tests and the Plasticity Chart.	

NON-COHESIVE (GRANULAR) SOILS

RELATIVE DENSITY	N-VALUE
Very Loose	0-4
Loose	5-10
Medium Dense	11-24
Dense	25-50
Very Dense	≥51

MOISTURE CONDITION	
Descriptive Term	Guide
Dry	No indication of water
Moist	Damp but no visible water
Wet	Visible free water, usually soil is below water table.

**GRAIN SIZE IDENTIFICATION		
Name	Size Limits	Familiar Example
Boulder	12 in. or more	Larger than basketball
Cobbles	3 in. to 12 in.	Grapefruit
Coarse Gravel	¾-in. to 3 in.	Orange or lemon
Fine Gravel	No. 4 sieve to ¾-in.	Grape or pea
Coarse Sand	No. 10 sieve to No. 4 sieve	Rock salt
Medium Sand	No. 40 sieve to No. 10 sieve	Sugar, table salt
Fine Sand*	No. 200 sieve to No. 40 sieve	Powdered sugar
Fines	Less than No. 200 sieve	
*Particles finer than fine sand cannot be discerned with the naked eye at a distance of 8 in.		

Coarse Grained Soil Subclassification	Percent (by weight) of Total Sample
Terms: GRAVEL, SAND, COBBLES, BOULDERS	PRIMARY CONSTITUENT
Sandy,gravelly, abundant cobbles, abundant boulders	>30-50]
with gravel, with sand, with cobbles, with boulders	>15-30] – secondary coarse grained constituents
scattered gravel, scattered sand, scattered cobbles, scattered boulders	5-15]
a trace gravel, a trace sand, a few cobbles, a few boulders	<5]
Silty (MH & ML)*, clayey (CL & CH)*	<15]
(with silt, with clay)*	5-15] – secondary fine grained constituents
(trace silt, trace clay)*	<5]
*Index tests and/or plasticity tests are performed to determine whether the term "silt" or "clay" is used.	

*Modified after Ref. ASTM D2487-93 & D2488-93
**Modified after Ref. Oregon DOT 1987 & FHWA 1997
***Modified after Ref. AASHTO 1988, DM 7.1 1982, and Oregon DOT 1987

PALMERTON & PARRISH, INC.

GENERAL NOTES

BEDROCK PROPERTIES & DESCRIPTIONS

ROCK QUALITY DESIGNATION (RQD)	
Description of Rock Quality	*RQD (%)
Very Poor	< 25
Poor	25-50
Fair	50-75
Good	75-90
Excellent	90-100

*RQD is defined as the total length of sound core pieces 4 in. or greater in length, expressed as a percentage of the total length cored. RQD provides an indication of the integrity of the rock mass and relative extent of seams and bedding planes.

SCALE OF RELATIVE ROCK HARDNESS		
Term	Field Identification	Approx. Unconfined Compressive Strength (tsf)
Extremely Soft	Can be indented by thumbnail	2.6-10
Very Soft	Can be peeled by pocket knife	10-50
Soft	Can be peeled with difficulty by pocket knife	50-260
Medium Hard	Can be grooved 2 mm deep by firm pressure of knife	260-520
Moderately Hard	Requires one hammer blow to fracture	520-1040
Hard	Can be scratched with knife or pick only with difficulty	1040-2610
Very Hard	Cannot be scratched by knife or sharp pick	>2610

DEGREE OF WEATHERING	
Slightly Weathered	Rock generally fresh, joints stained and discoloration extends into rock up to 25mm (1 in), open joints may contain clay, core rings under hammer impact.
Weathered	Rock mass is decomposed 50% or less, significant portions of rock show discoloration and weathering effects, cores cannot be broken by hand or scraped by knife.
Highly Weathered	Rock mass is more than 50% decomposed, complete discoloration of rock fabric, core may be extremely broken and gives clunk sound when struck by hammer, may be shaved with a knife.

GRAIN SIZE (TYPICALLY FOR SEDIMENTARY ROCKS)		
Description	Diameter (mm)	Field Identification
Very Coarse Grained	>4.76	
Coarse Grained	2.0-4.76	Individual grains can easily be distinguished by eye.
Medium Grained	0.42-2.0	Individual grains can be distinguished by eye.
Fine Grained	0.074-0.42	Individual grains can be distinguished by eye with difficulty.
Very Fine Grained	<0.074	Individual grains cannot be distinguished by unaided eye.

VOIDS	
Pit	Voids barely seen with naked eye to 6mm (¼-in)
Vug	Voids 6 to 50mm (¼ to 2 in) in diameter
Cavity	50 to 6000mm (2 to 24 in) in diameter
Cave	>600mm

BEDDING THICKNESS	
Very Thick Bedded	> 3' thick
Thick Bedded	1' to 3' thick
Medium Bedded	4" to 1' thick
Thin Bedded	1¼" to 4" thick
Very Thin Bedded	½" to 1¼" thick
Thickly Laminated	⅛" to ½" thick
Thinly Laminated	⅛" or less (paper thin)

DRILLING NOTES

Drilling and Sampling Symbols

NQ – Rock Core (2-in. diameter)
HQ – Rock Core (3 in. diameter)
HSA – Hollow Stem Auger
CFA – Continuous Flight (Solid Stem) Auger
SS – Split Spoon Sampler
ST – Shelby Tube
WB – Wash Bore or Mud Rotary
TP – Test-Pit
HA – Hand Auger

Soil Sample Types

Shelby Tube Samples: Relatively undisturbed soil samples were obtained from the borings using thin wall (Shelby) tube samplers pushed hydraulically into the soil in advance of drilling. This sampling, which is considered to be undisturbed, was performed in accordance with the requirements of ASTM D 1587. This type of sample is considered best for the testing of "in-situ" soil properties such as natural density and strength characteristics. The use of this sampling method is basically restricted to soil containing little to no chert fragments and to softer shale deposits.

Split Spoon Samples: The Standard Penetration Test is conducted in conjunction with the split-barrel sampling procedure. The "N" value corresponds to the number of blows required to drive the last 1 foot of an 18-in. long, 2-in. O.D. split-barrel sampler with a 140 lb. hammer falling a distance of 30 in. The Standard Penetration Test is carried out according to ASTM D-1586.

Water Level Measurements

Water levels indicated on the boring logs are levels measured in the borings at the times indicated. In permeable materials, the indicated levels may reflect the location of groundwater. In low permeability soils, shallow groundwater may indicate a perched condition. Caution is merited when interpreting short-term water level readings from open bore holes. Accurate water levels are best determined from piezometers.

Automatic Hammer

Palmerton and Parrish's CME's are equipped with automatic hammers. The conventional method used to obtain disturbed soil samples used a safety hammer operated by company personnel with a cat head and rope. However, use of an automatic hammer allows a greater mechanical efficiency to be achieved in the field while performing a Standard Penetration resistance test based upon automatic hammer efficiencies calibrated using dynamic testing techniques.

*Modified after Ref. ASTM D2487-93 & D2488-93
**Modified after Ref. Oregon DOT 1987 & FHWA 1997
***Modified after Ref. AASHTO 1988, DM 7.1 1982, and Oregon DOT 1987

APPENDIX III

GRAIN SIZE ANALYSIS

4168 W. Kearney St.
Springfield, MO 65803
Telephone: (417) 864-6000
Fax: (417) 864-6004

GRAIN SIZE DISTRIBUTION

CLIENT Childers Architect **PROJECT NAME** Cherokee Nation OSU Building

PROJECT NO. 255932 **PROJECT LOCATION** Tahlequah, OK

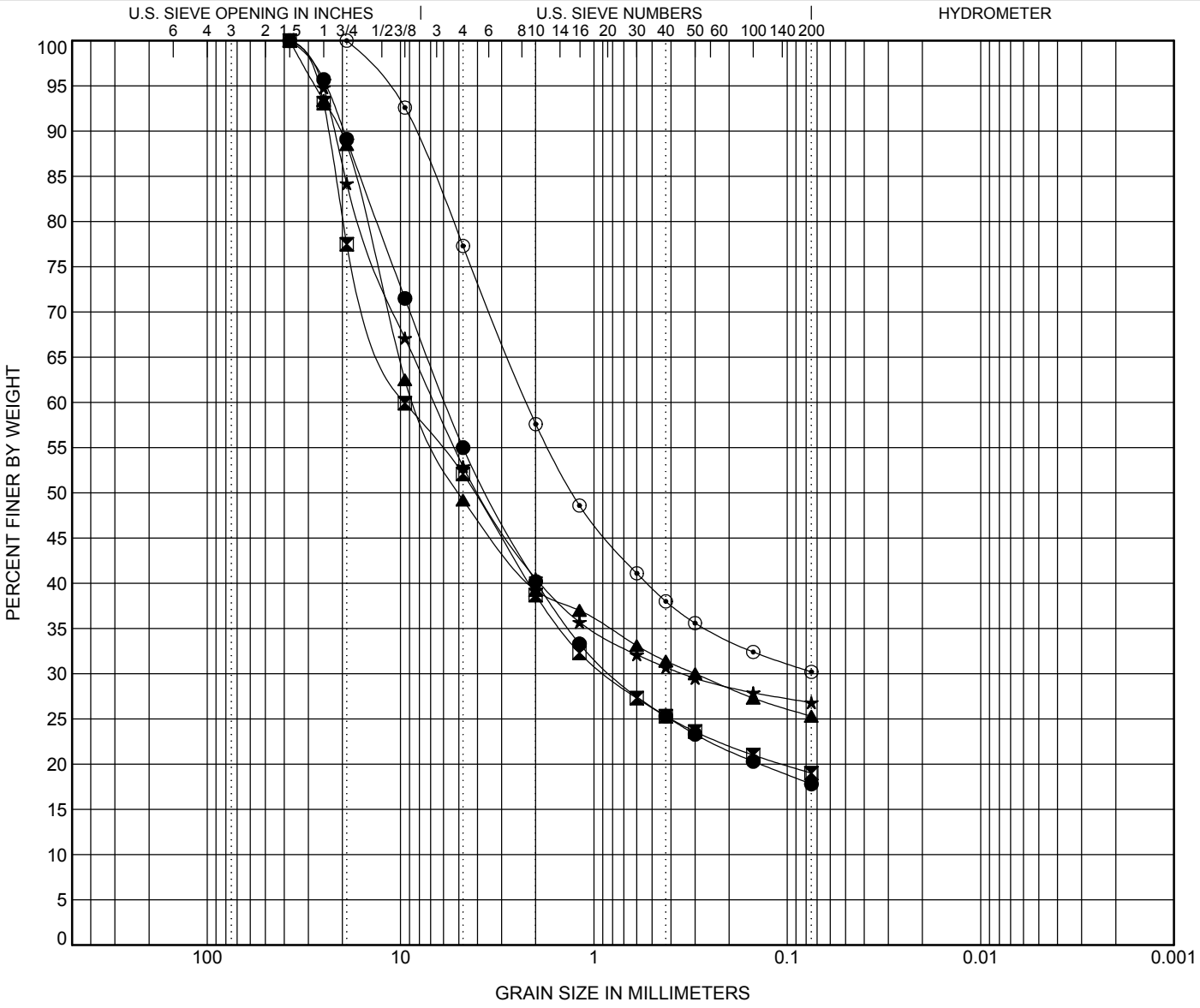

COBBLES	GRAVEL		SAND			SILT OR CLAY
	coarse	fine	coarse	medium	fine	

	BOREHOLE	DEPTH	Classification	LL	PL	PI	Cc	Cu
●	1	3.0	**CLAYEY GRAVEL with SAND(GC)**					
⊠	2	3.5	**CLAYEY GRAVEL with SAND(GC)**					
▲	3	13.5	**CLAYEY GRAVEL with SAND(GC)**					
★	8	3.5	**CLAYEY GRAVEL with SAND(GC)**					
⊙	9	18.0	**CLAYEY SAND with GRAVEL(SC)**					

	BOREHOLE	DEPTH	D100	D60	D30	D10	%Gravel	%Sand	%Silt	%Clay
●	1	3.0	37.5	5.86	0.777		45.0	37.2	17.8	
⊠	2	3.5	37.5	9.537	0.868		47.9	33.1	19.0	
▲	3	13.5	37.5	8.339	0.3		50.8	23.9	25.3	
★	8	3.5	37.5	6.718	0.347		47.1	26.1	26.8	
⊙	9	18.0	19	2.222			22.7	47.1	30.2	

GRAIN SIZE - PPI STD TEMPLATE.GDT - 1/29/19 11:39 - S:_MASTER PROJECT FILE\2019\OK\CHILDERS ARCH-255932-CHEROKEE NATION OSU BLDG-SUB\BORING LOGS\BORING LOGS.GPJ

GRAIN SIZE DISTRIBUTION

4168 W Kearney St.
Springfield, MO 65803
Telephone: 417-864-6000

CLIENT Childers Architect **PROJECT NAME** Cherokee Nation OSU Building

PROJECT NO. 255932 **PROJECT LOCATION** Tahlequah, OK

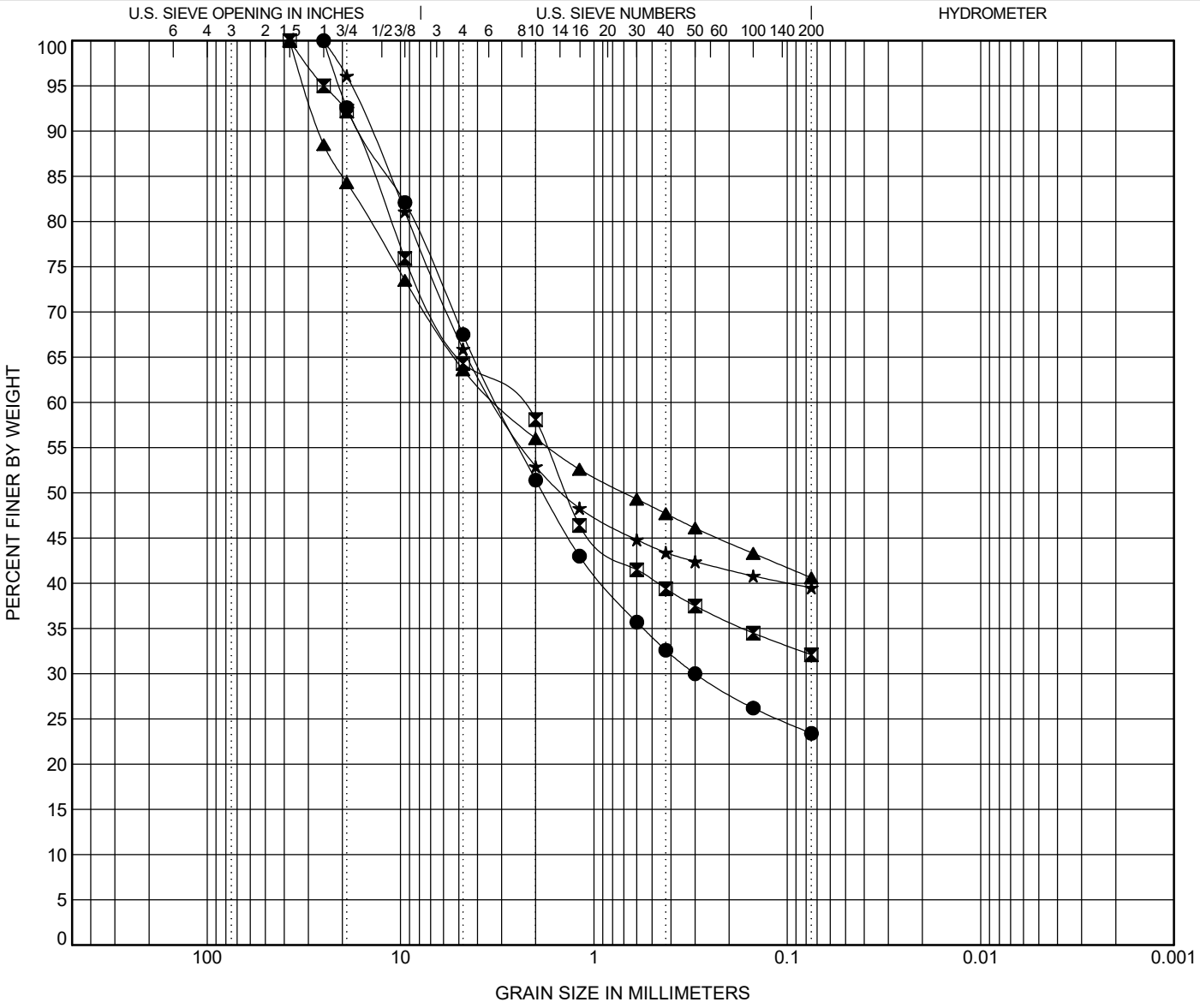

COBBLES	GRAVEL		SAND			SILT OR CLAY
	coarse	fine	coarse	medium	fine	

	BOREHOLE	DEPTH	Classification	LL	PL	PI	Cc	Cu
●	11	3.5	**CLAYEY SAND with GRAVEL(SC)**					
⊠	12	3.5	**CLAYEY GRAVEL with SAND(GC)**					
▲	13	3.5	**CLAYEY GRAVEL with SAND(GC)**					
★	13	28.5	**CLAYEY GRAVEL with SAND(GC)**					

	BOREHOLE	DEPTH	D100	D60	D30	D10	%Gravel	%Sand	%Silt	%Clay
●	11	3.5	25	3.175	0.3		32.5	44.1	23.4	
⊠	12	3.5	37.5	2.607			35.7	32.2	32.1	
▲	13	3.5	37.5	3.153			36.4	23.0	40.6	
★	13	28.5	25	3.208			34.1	26.4	39.5	

GRAIN SIZE - PPI STD TEMPLATE.GDT - 4/3/19 14:06 - \\MAIN-SERVER\NETWORK\SHARED_MASTER PROJECT FILE\2019\OK\CHILDERS ARCH-255932-CHEROKEE NATION OSU BLDG-SUB\BORING LOGS\BORING LOGS.GPJ

APPENDIX IV

IMPORTANT INFORMATION REGARDING YOUR GEOTECHNICAL REPORT

Important Information about This

Geotechnical-Engineering Report

Subsurface problems are a principal cause of construction delays, cost overruns, claims, and disputes.

While you cannot eliminate all such risks, you can manage them. The following information is provided to help.

The Geoprofessional Business Association (GBA) has prepared this advisory to help you – assumedly a client representative – interpret and apply this geotechnical-engineering report as effectively as possible. In that way, clients can benefit from a lowered exposure to the subsurface problems that, for decades, have been a principal cause of construction delays, cost overruns, claims, and disputes. If you have questions or want more information about any of the issues discussed below, contact your GBA-member geotechnical engineer. Active involvement in the Geoprofessional Business Association exposes geotechnical engineers to a wide array of risk-confrontation techniques that can be of genuine benefit for everyone involved with a construction project.

Geotechnical-Engineering Services Are Performed for Specific Purposes, Persons, and Projects

Geotechnical engineers structure their services to meet the specific needs of their clients. A geotechnical-engineering study conducted for a given civil engineer will not likely meet the needs of a civil-works constructor or even a different civil engineer. Because each geotechnical-engineering study is unique, each geotechnical-engineering report is unique, prepared *solely* for the client. *Those who rely on a geotechnical-engineering report prepared for a different client can be seriously misled*. No one except authorized client representatives should rely on this geotechnical-engineering report without first conferring with the geotechnical engineer who prepared it. *And no one – not even you – should apply this report for any purpose or project except the one originally contemplated.*

Read this Report in Full

Costly problems have occurred because those relying on a geotechnical-engineering report did not read it *in its entirety*. Do not rely on an executive summary. Do not read selected elements only. *Read this report in full.*

You Need to Inform Your Geotechnical Engineer about Change

Your geotechnical engineer considered unique, project-specific factors when designing the study behind this report and developing the confirmation-dependent recommendations the report conveys. A few typical factors include:

- the client's goals, objectives, budget, schedule, and risk-management preferences;
- the general nature of the structure involved, its size, configuration, and performance criteria;
- the structure's location and orientation on the site; and
- other planned or existing site improvements, such as retaining walls, access roads, parking lots, and underground utilities.

Typical changes that could erode the reliability of this report include those that affect:

- the site's size or shape;
- the function of the proposed structure, as when it's changed from a parking garage to an office building, or from a light-industrial plant to a refrigerated warehouse;
- the elevation, configuration, location, orientation, or weight of the proposed structure;
- the composition of the design team; or
- project ownership.

As a general rule, *always* inform your geotechnical engineer of project changes – even minor ones – and request an assessment of their impact. *The geotechnical engineer who prepared this report cannot accept responsibility or liability for problems that arise because the geotechnical engineer was not informed about developments the engineer otherwise would have considered.*

This Report May Not Be Reliable

Do not rely on this report if your geotechnical engineer prepared it:

- for a different client;
- for a different project;
- for a different site (that may or may not include all or a portion of the original site); or
- before important events occurred at the site or adjacent to it; e.g., man-made events like construction or environmental remediation, or natural events like floods, droughts, earthquakes, or groundwater fluctuations.

Note, too, that it could be unwise to rely on a geotechnical-engineering report whose reliability may have been affected by the passage of time, because of factors like changed subsurface conditions; new or modified codes, standards, or regulations; or new techniques or tools. *If your geotechnical engineer has not indicated an "apply-by" date on the report, ask what it should be*, and, in general, *if you are the least bit uncertain* about the continued reliability of this report, contact your geotechnical engineer before applying it. A minor amount of additional testing or analysis – if any is required at all – could prevent major problems.

Most of the "Findings" Related in This Report Are Professional Opinions

Before construction begins, geotechnical engineers explore a site's subsurface through various sampling and testing procedures. *Geotechnical engineers can observe actual subsurface conditions only at those specific locations where sampling and testing were performed*. The data derived from that sampling and testing were reviewed by your geotechnical engineer, who then applied professional judgment to form opinions about subsurface conditions throughout the site. Actual sitewide-subsurface conditions may differ – maybe significantly – from those indicated in this report. Confront that risk by retaining your geotechnical engineer to serve on the design team from project start to project finish, so the individual can provide informed guidance quickly, whenever needed.

This Report's Recommendations Are Confirmation-Dependent

The recommendations included in this report – including any options or alternatives – are confirmation-dependent. In other words, *they are not final*, because the geotechnical engineer who developed them relied heavily on judgment and opinion to do so. Your geotechnical engineer can finalize the recommendations *only after observing actual subsurface conditions* revealed during construction. If through observation your geotechnical engineer confirms that the conditions assumed to exist actually do exist, the recommendations can be relied upon, assuming no other changes have occurred. *The geotechnical engineer who prepared this report cannot assume responsibility or liability for confirmation-dependent recommendations if you fail to retain that engineer to perform construction observation.*

This Report Could Be Misinterpreted

Other design professionals' misinterpretation of geotechnical-engineering reports has resulted in costly problems. Confront that risk by having your geotechnical engineer serve as a full-time member of the design team, to:

- confer with other design-team members,
- help develop specifications,
- review pertinent elements of other design professionals' plans and specifications, and
- be on hand quickly whenever geotechnical-engineering guidance is needed.

You should also confront the risk of constructors misinterpreting this report. Do so by retaining your geotechnical engineer to participate in prebid and preconstruction conferences and to perform construction observation.

Give Constructors a Complete Report and Guidance

Some owners and design professionals mistakenly believe they can shift unanticipated-subsurface-conditions liability to constructors by limiting the information they provide for bid preparation. To help prevent the costly, contentious problems this practice has caused, include the complete geotechnical-engineering report, along with any attachments or appendices, with your contract documents, *but be certain to note conspicuously that you've included the material for informational purposes only*. To avoid misunderstanding, you may also want to note that "informational purposes" means constructors have no right to rely on the interpretations, opinions, conclusions, or recommendations in the report, but they may rely on the factual data relative to the specific times, locations, and depths/elevations referenced. Be certain that constructors know they may learn about specific project requirements, including options selected from the report, *only* from the design drawings and specifications. Remind constructors that they may perform their own studies if they want to, and *be sure to allow enough time* to permit them to do so. Only then might you be in a position to give constructors the information available to you, while requiring them to at least share some of the financial responsibilities stemming from unanticipated conditions. Conducting prebid and preconstruction conferences can also be valuable in this respect.

Read Responsibility Provisions Closely

Some client representatives, design professionals, and constructors do not realize that geotechnical engineering is far less exact than other engineering disciplines. That lack of understanding has nurtured unrealistic expectations that have resulted in disappointments, delays, cost overruns, claims, and disputes. To confront that risk, geotechnical engineers commonly include explanatory provisions in their reports. Sometimes labeled "limitations," many of these provisions indicate where geotechnical engineers' responsibilities begin and end, to help others recognize their own responsibilities and risks. *Read these provisions closely*. Ask questions. Your geotechnical engineer should respond fully and frankly.

Geoenvironmental Concerns Are Not Covered

The personnel, equipment, and techniques used to perform an environmental study – e.g., a "phase-one" or "phase-two" environmental site assessment – differ significantly from those used to perform a geotechnical-engineering study. For that reason, a geotechnical-engineering report does not usually relate any environmental findings, conclusions, or recommendations; e.g., about the likelihood of encountering underground storage tanks or regulated contaminants. *Unanticipated subsurface environmental problems have led to project failures*. If you have not yet obtained your own environmental information, ask your geotechnical consultant for risk-management guidance. As a general rule, *do not rely on an environmental report prepared for a different client, site, or project, or that is more than six months old.*

Obtain Professional Assistance to Deal with Moisture Infiltration and Mold

While your geotechnical engineer may have addressed groundwater, water infiltration, or similar issues in this report, none of the engineer's services were designed, conducted, or intended to prevent uncontrolled migration of moisture – including water vapor – from the soil through building slabs and walls and into the building interior, where it can cause mold growth and material-performance deficiencies. Accordingly, ***proper implementation of the geotechnical engineer's recommendations will not of itself be sufficient to prevent moisture infiltration.*** Confront the risk of moisture infiltration by including building-envelope or mold specialists on the design team. ***Geotechnical engineers are not building-envelope or mold specialists.***

GEOPROFESSIONAL BUSINESS ASSOCIATION

Telephone: 301/565-2733
e-mail: info@geoprofessional.org www.geoprofessional.org

Copyright 2016 by Geoprofessional Business Association (GBA). Duplication, reproduction, or copying of this document, in whole or in part, by any means whatsoever, is strictly prohibited, except with GBA's specific written permission. Excerpting, quoting, or otherwise extracting wording from this document is permitted only with the express written permission of GBA, and only for purposes of scholarly research or book review. Only members of GBA may use this document or its wording as a complement to or as an element of a report of any kind. Any other firm, individual, or other entity that so uses this document without being a GBA member could be committing negligent

TAHLEQUAH PUBLIC WORKS AUTHORITY
WATER & SEWER CONSTRUCTION
POLICY GUIDELINES

Approved May 16, 2008

TABLE OF CONTENTS

		Page No.
SECTION 1:	INTENT & OVERVIEW	3
SECTION 2:	DEFINITIONS	4
SECTION 3:	PERMITS, PLANS AND REVIEW FEES	5-6
SECTION 4:	CONSTRUCTION GUIDELINES & SPECIFICATIONS	7-13
SECTION 5:	CAPACITY FEES A. DEVELOPMENT FEES B. FUTURE DEVELOPMENT IMPACT FEES C. SERVICE TAP & FIRE PROTECTION FEES D. SEWER & WATER DISTRICT ZONE FEES	14-18

SECTION 1: INTENT AND OVERVIEW

1.1 These policy guidelines are set forth to assist the implementation of the Tahlequah Public Works Authority's purpose to provide, furnish and supply to the citizens of the City of Tahlequah and the territory in proximity thereto, and to protect the health, safety, and general welfare of the general public within the Authority's jurisdiction to serve and maintain water and sanitary sewer facilities.

1.2 LET IT BE KNOWN, that the Tahlequah Public Works Authority, to implement these policies, shall continue to revise and replace existing policies and to establish new standards and policies so that the needs and demands of new growth and expansion to the City of Tahlequah will not burden the existing facilities but provide the necessary increased level of service and funding expected to continue service and maintenance of water and sanitary sewer facilities as part of the Authority's current plans for the future growth of the City of Tahlequah.

1.3 All of the TPWA water and sewer facilities will benefit all new development that depends on these services and it is therefore appropriate to treat each development independently within each basin or distribution grid for the purposes of calculating, collecting, and spending the funds collected for the construction of these facilities.

1.4 A three tier method for new development shall be used to finance, defray, or reimburse all or a portion of the costs incurred by the TPWA to construct the improvements for water and sewer facilities.

SECTION 2: DEFINITIONS

The following abbreviations and words shall have the designated meanings:

Board--- The Tahlequah Public Works Authority Board of Trustees, the Governing Board of the Authority.

City---City of Tahlequah, Oklahoma, a municipal corporation acting through the city's duly authorized officers or agents.

Development---Any construction or expansion of a building, structure, or use, any change in use of a building or structure, or any change in the use of land, which creates additional demand for water and sewer facilities.

Inspector---The authorized representative of the TPWA who is assigned to a specific project site or any part thereof.

ODEQ---Oklahoma Department of Environmental Quality, the State regulatory authority under which the State Construction Standards are promulgated.

Sanitary Sewer---A pipe that conveys sewage or wastewater, and into which storm, surface and ground waters or unpolluted industrial wastes are not admitted intentionally.

TPWA---Tahlequah Public Works Authority, a State of Oklahoma Public Trust acting through the Authority's duly authorized officers or agents.

Water Line---A water conveyance pipe that supplies pressurized drinkable water to connections for public use.

SECTION 3: PERMITS, PLANS & REVIEW FEES

3.1 All municipal water and sewer systems, facilities, and connections shall be constructed in compliance with the Oklahoma Administrative Code, Title 252, Chapter 625 titled "**Public Water Supply Construction Standards**" and Chapter 656 titled "**Water Pollution Control Facility Construction** Standards" established by the ODEQ or ordinances, regulations, rules and requirements set forth by the City or TPWA standards, whichever is more stringent.

3.2 No municipal water and sewer systems, collectors or distribution lines shall be constructed until plans and specifications meeting the above criteria are reviewed, approved, and signed by a licensed professional engineer in responsible charge of the project.

3.3 All water and sewer line plans for the connection to the municipal system shall have TPWA Board approval prior to actual construction except plans on small extensions less than 500 feet that can be approved by the General Manager prior to actual construction. Approval shall be withheld if the water or sewer systems to which the proposed lines are connecting to have reached or, with the addition of the proposed lines, would reach treatment or hydraulic capacities *(See Section Five (5) Capacity Guidelines)*. Further, approval shall also be withheld if the proposed lines do not meet or exceed the standards of the ODEQ and the TPWA, or may be withheld for any other valid reason.

3.4 All plans approved by the TPWA Board and General Manager shall have an application for a "Permit to Construct" sent, with a minimum of five (5) sets of plans and an Engineers Design Report and application fee, to the ODEQ for review and approval for the Permit.

3.5 The General Manager or his designated representative shall inspect each approved project and shall prohibit commencement of any construction or connection: (1) prior to the scheduled date of a pre-work conference, (2) during construction that is not in accordance with the approved plans, and (3) any deviation that does not meet with these policies and regulations.

3.6 All ODEQ Permit Fees and TPWA Plan Review Fees shall be paid to the TPWA office when submitting the ODEQ Permit Application for "Permit to Construct", Engineer approved plans, specifications, and Engineering Reports. The ODEQ Permit Fee will be forwarded on to the ODEQ Water Quality Division for review. The amount is determined by the ODEQ Fee schedule for

construction projects and can be obtained through the project engineer. The TPWA Plan Review Fee shall be set by the TPWA General Manager and is presently set at $100.00 for each water project, $100.00 for each sewer project and $175.00 for each combined water & sewer projects.

TECHNICAL SPECIFICATIONS

I. WATER LINES

1.1 GENERAL:

The intent of this specification is to delineate materials and methods of construction for potable water lines and subsidiary systems as shown on the plans, complete in place and ready for operation by the OWNER. The work consists of all clearing, trench excavation, backfill and cleanup; furnishing and installing all pipe, casings, valves, fittings, concrete thrust blocks, and appurtenant items; testing and disinfection of system; and replacing fences, driveways, road surfaces, and all other improvements disturbed during the construction. All pipe shall be of the type and size shown on the drawings and all materials and work shall conform to the provisions of these specifications unless specifically exempted in other portions of the CONTRACT DOCUMENTS.

1.2 MATERIALS:

1.2.1 Ductile Iron Pipe: All pipe shall conform to ANSI Specification A21.51; AWWA Specification C151, and cement lining in accordance with ANSI Specification A21.4 and AWWA Specification C104. Pipe shall be pressure rated at 350psi with surge allowance of 100psi, with pipe thickness to conform with depth of cover and laying conditions.

1.2.2 PVC Pressure Pipe: Materials used to produce the pipe, couplings, and fittings shall be manufactured in accordance with ASTM D-2241, ASTM D-3139, Commercial Standard CS 256, and approved by the National Sanitation Foundation (NSF). The pipe shall be made from clean, virgin, **class 12454-B** PVC compound conforming to ASTM Resin Specifications D-1784 Type 1, Grade 1. Standard joint length shall be twenty (20) feet. The pipe shall have a minimum Standard Dimension ratio (SDR) of 21 for class 200psi. The pipe shall be marked continuously along the length with: Manufacturer's name, nominal size, class pressure rating, PVC 1120, NSF, and identification code. Pipe certification sheets shall be submitted by the manufacturer to show compliance with these specifications as requested by the Engineer.

1.2.3 Fittings: Fittings for all pipe 4" or larger shall be standard mechanical joint ductile iron unless otherwise indicated on the plans or noted by details. Ductile Iron Fittings shall conform to ANSI Specifications A21.10 and A21.11 and AWWA Specification C110.

Fittings shall be manufactured in accordance with ANSI Specification A21.4 and AWWA Specification C104, and shall be furnished with a complete set of joint materials for each socket opening.

1.2.4 Joints: Mechanical joints shall conform to and be tested in accordance with ANSI Specification A21.11 and AWWA Specification C111.

Restrained joints, when necessitated by the conditions of construction as determined by the Engineer, shall be used with or without thrust blocking for pipe joints adjacent to fittings, bends and terminal points as well as fitting joints or where utilized in ANSI Specification A21.10 and with A21.11. Joint restraints at Fire Hydrants shall conform to ASTM A307. Specified restraints shall be MIDCO's PERMA-GRIP Mechanical restrained Fittings for Class 200, SDR-21 PVC pipe or Model 1300 Uniflange Pipe restraints by Standard International and MEGALUG joint restraint by EBAA Iron Sales.

Flanged joints shall be used if indicated and shall conform to ANSI Specification A21.15 and AWWA Specification C115 for 125 pounds flange with appropriate bolts per standard ASA specifications for each flange size.

1.2.5 PVC Pipe Couplings: Couplings including bell ends, shall be Ring-Tite, Bell-Ring, or Push Joint connected, with fittings furnished by the pipe manufacturer and certified to be suitable for use with the pipe furnished. They shall have a minimum pressure rating of 200psi, and be constructed with deep sockets.

1.2.6 Gate Valves: Specified gate valves shall be manufactured by AVK. All Gate Valves shall conform to, and be tested in accordance with, the AWWA Standard for Resilient Seated Gate Valves, for water and sewage systems, ANSI/AWWA Specification C509. Valves shall be bubble tight from either direction at a rated design working pressure of 200psi. Valves shall have a single disc gate with synthetic rubber seat bonded or mechanically attached to the disc; a non-rising stem with 2" AWWA operating nut; opening counter clockwise with "O" ring stem seals. Valve interiors shall have a corrosion resistant coating acceptable for potable water and end connection to fit the pipe or connection to which it is attached. Valves installed with stems placed at depths greater than 36-inches shall have extensions attached to the operating nut as part of the valve component.

Each valve shall have the maker's name or initials, pressure rating and year of manufacture cast on the body and shall be furnished complete with set of joint materials for each socket.

1.2.7 Tapping Sleeves & Valves: Tapping sleeves and valves shall be furnished and installed in sizes indicated on connections to existing lines. Tapping sleeves manufactured by SMITH BLAIR or FORD are acceptable. The valves shall be Flange by Mechanical Joint Resilient Seat conforming with applicable provisions of AWWA C509.

1.2.8 Valve Boxes: Valve boxes shall be of the cast iron extension type with screw or slide adjustment and flared base. The minimum thickness of the metal shall be 3/16 inch. The word WATER shall be cast in the cover. The boxes shall be of such length as will be adapted to the depth

of cover over the pipe at the valve location, with bottom section, extension pieces, and top section as needed. **All installed valve boxes shall have a minimum 24"x 24" x 6" thick concrete pad set in place around the valve box for location and protection of the box.**

1.2.9 Valve & Line Markers: Identification markers shall be of metal fabrication with baked enamel finish noting the OWNER, and type of facility identified. Marker must be at least 80 square inches in area and shall have attachments to be firmly secured to a galvanized rod or post five (5) feet in length for erection at the location needed.

1.2.10 Steel Pipe Casing: All steel pipe casing shall be new or used smooth walled, welding steel pipe. The pipe shall be straight, round, and sound with no dents or splits and shall have a standard wall thickness as noted:

18" Pipe.....0.375" Minimum Thickness
12" Pipe.....0.330" Minimum Thickness
10" Pipe.....0.307" Minimum Thickness
8" Pipe.....0.277" Minimum Thickness

Pipe shall be delivered in lengths that will best fit the crossings as noted in the plans with a minimum number of joints to be welded. Pipe shall be subject to adequate inspection before, during, and after unloading of pipe at the job site and owner reserves the right to reject any and all pipe not in satisfactory conformance with this specification.

Spacers used between casing and pipe shall be as shown on the plans or as manufactured by RACI Spacers, Inc., Tulsa; M-2 THINsulator by T. D. Williamson, Inc., Tulsa; or APS Casing Spacers by Advance Prod. & Systems, Inc., Lafayette, La.

1.2.11 Fire & Flushing Hydrants: Fire Hydrants shall be AVK and shall conform to, and be tested in accordance with the AWWA Standard for Dry-Barrel Fire Hydrants, AWWA C502. Fire Hydrants shall have a 5¼-inch compression main valve; 6-inch inlet connection; mechanical joint hub; bury length as specified on the plans; two 2½-inch hose nozzles with TAHLEQUAH (e.g. Mueller 301 threads are Tahlequah threads) THREADS; one 4½-inch pumper nozzle with National Standard threads**(CHECK WITH FIRE DEPARTMENT)**; and Safety Red finish paint above ground line. Flushing Hydrant shall have a 2¼-inch main valve opening with one 2½-inch hose nozzle with TAHLEQUAH THREADS and Safety Red finish paint above ground line. All other specifications shall meet the model requirements and sizes including a 10 year guarantee.

1.2.12 Air Release Valve: Air Release Valves shall be installed at the locations shown on the plans, or as directed by the Engineer. Valve shall be a heavy-duty air release type for 150psi working pressure, tested to 300psi, size shown on plans. Body, cover and baffle shall be cast iron. All internal parts to be stainless steel and/or bronze, and the inside valve coated with rust inhibitor as manufactured by Val-Matic, or an approved equal. Tapping saddle shall be CLOW, twin seal brass saddle and corporation stop with IP threads on outlet piping connection. Valve and piping connection shall be offset from the main line and properly supported to avoid stresses on piping connections. The valve discharge will have open end piping extended with a screened downward

facing elbow. Valve to be place in a 24" meter box and lid with keyed locking mechanism and lettering as approved by the Engineer. Use tapping sleeve Spec.

1.2.13 Tracer Wire: 12 gauge TRACER WIRE for the location of PVC water lines shall be required in all trenched areas of construction. The wire shall be attached to the water line and shall be brought to the surface and attached at all valve and meter boxes and any other appurtenance where the wire can be accessed.

1.2.14 Cast-in-Place Concrete: Concrete used for capping channel crossings, road crossings, and thrust blocking shall use as and included by reference herein ACI 301 Concrete Standard Specifications for Concrete for Building in its entirety. All concrete shall be mixed and proportioned as a six sack per yard mix to give good workability with a maximum slump of 4-inches. Concrete shall show a compressive strength of 3500psi at 28 days when tested. All crossing pours shall be vibrated to reduce voids, honeycombing, or defects. Concrete shall not be placed when the outside air temperature is 40° F or under and falling, except with the approval of the Engineer. All concrete will be placed against undisturbed earth or compacted bedding with all exposed concrete leveled and broomed to achieve a smooth brushed finish and all blocking placed so that pipe and fittings will be accessible for repair or Polyethylene wrapped. Concrete thrust blocking for all pipe fittings shall be in accordance with the table on the following page:

1.2.15 Submittals: The CONTRACTOR shall submit to the Engineer, three (3) copies of material submittals for all material he proposes to use. Construction shall not begin until the submittals have been approved by the Engineer.

Submittals for pipe shall consist of notarized certifications from the manufacturer that the pipe was manufactured and tested in accordance with the applicable specifications. The certifications shall indicate the pipe diameter, the pressure rating, resin classification, and the batch number from which the pipe was manufactured.

Submittals for material other than pipe shall consist of manufacturer's product literature or shop drawings, indicating dimensions and material specifications. Submittals shall include reference to compliance with ANSI, AWWA, ASTM, NSF, and other applicable standards.

1.3 INSTALLATION:

1.3.1 Protection of service & lateral lines: The location of utility service lines and sewer system lateral lines serving individual properties or other utilities may or may not be shown on the plans. The CONTRACTOR shall assume that such service lines exist whether or not they are shown on the plans, and it shall be the responsibility of the Contractor to make any necessary changes in the line and/or grade of such services, or to secure the necessary changes therein to be made by the particular utility company involved or other owner thereof. Contractor shall pay the cost of all such revisions whether performed by the Contractor, the utility company, or other owner. In the event of interruption of a utility service as a result of accidental breakage, the Contractor shall promptly notify the owner of the utility, and shall repair or have repaired, in the same manner as necessary changes above provided for, and the Contractor shall do all things necessary to see the restoration of services as promptly as may be reasonably done.

1.3.2 General Installation Details: All material for the project shall be transported, delivered, and stored in a manner to prevent damage to the materials. All damaged, broken or otherwise defective materials will be rejected. Store lubricants, gaskets, jointing materials, and other packaged materials in a dry, protected area in which the manufacturer's name and all other applicable data is plainly marked and visible.

Pipe shall be delivered to the job site by means which will adequately support it, and not subject it to undue stresses. The load shall be so supported that bottom rows of pipe are not damaged by crushing. Pipe shall be stored and protected and shall not be strung along the line of trenching more than two days prior to placing. The trench wall shall be straight with a minimum trench width of eight (8) inches or three (3) times the pipe diameter, whichever is greater, at the grade line with the upper portion of the trench sloped to prevent cave-in or collapse of the trench. The bottom of the trench shall be finished to provide a uniform bearing for the pipe. Changes in grade in the trench bottom shall be made as shown on the drawings so the pipe will rest on the trench bottom. Where smaller radius of curvature than that recommended by the pipe manufacturer is required to fit the trench bottom, suitable elbows shall be used. Concrete thrust blocking shall be installed at all points of lateral thrust such as tees, elbows, etc., unless restraining connections are used as approved by the Water Department Superintendent. The pipe is to be laid in a trench having a six (6) inch bed of select material prepared before the pipe is lowered into the trench. Backfilling shall be carefully placed to avoid dropping rocks or large clods on the pipe. All backfill within eight (8) inches of the edges of the pipe shall contain no stones. Underground crossover piping shall provide a minimum clearance of twenty-four (24) inches between bottom of existing pipe and top of new pipe unless conditions restrict such clearance.

Sand, pea gravel, or crushed stone shall be used as bedding around the pipe, **(6) inches below, and twelve (12) inches over the pipe as standard trench bedding**. All pipe installed shall have a **minimum cover over the top of the pipe of thirty-six (36) inches** except where otherwise specified or approved by the Engineer. Where ledge or solid rock is encountered at this depth the pipe may be raised to a minimum depth of thirty (30) inches cover over the top of pipe.

The Contractor shall replace all street and paved surfaces as soon as possible after the pipe has been backfilled. Concrete, asphalt and gravel streets, parking lots, and driveways shall be cut in straight lines a minimum of twelve (12) inches on undisturbed soil from the excavated area and replaced with concrete or material in kind to a minimum thickness of eight (8) inches for streets and six (6) inches for driveways and parking lots. Any pavement or other surfaces of streets, roads, driveways, or walks which are removed or damaged whether or not within the trench or excavated limits shall be replaced or repaired to its original or better condition. Backfill above the specified pipe embedment will require compaction to 95% standard density under these surfaces. All other compaction will be of a character that will be reasonable free from settlement. Wherever trenches have not been properly filled or where settlement has occurred at any time prior to final acceptance of the entire work covered by this contract, to the extent that the top of the backfill is below the original ground surface, such trenches shall be refilled and backfill surface compacted and smoothed to conform to the elevation of the adjacent ground surface.

Trench backfill shall proceed immediately behind the pipe laying to avoid leaving open ditches over night. Any excavation which remains open over night shall be properly barricaded and lighted to avoid any injury to persons or property. When work is stopped at night or for any other reason, water tight plugs shall be used to prevent excavated material, water, and small animals from entering the pipe.

Where the Contractor encounters water or the trench soil becomes mucky or in such condition that the bedding cannot be graded properly or support the pipe, then the Contractor shall excavate below the sub-grade sufficiently to allow for a gravel sub-grade bedding to be placed. Pumps shall be installed and operated to allow the water level to be drawn down below the bottom of the pipe. The Contractor shall install trench bracing where protection of his employees and the work is necessary and required by safety codes.

1.3.3 Testing & Disinfection of Lines: After each convenient section of pipe line is completed, that section shall be pressure tested and disinfected. The pipe shall be tested by applying a hydraulic pressure of not less than 150 psi, nor more than the pressure rating of the pipe, for a minimum period of (24) hours. The allowable leakage shall not exceed ten (10) gallons per inch of diameter per mile of pipe. Leakage in excess of this amount shall be isolated and repaired and all visible leakage shall be repaired regardless of the amount. The Contractor shall pay for all water loss and usage during the period of construction and testing and until final acceptance of the system. The Contractor shall disinfect the completed water system in accordance with the latest requirements of the Oklahoma State Department of Environmental Quality, including taking appropriate samples and furnishing the OWNER laboratory test reports.

1.3.4 Clearing & Restoring R-O-W: The Contractor will clear stretches of rights-of-way in advance of staking the line for excavation. Contractor shall notify the OWNER at least one week in advance of any particular section to be staked and shall remove trees, brush, stumps, logs, dirt piles, debris, or other objects along the designated area to be staked. Depressions left from the clearing operations shall be filled and the materials from all clearing operations disposed of to the complete satisfaction of the property owner. Clean up of areas shall proceed as the construction progress. Drainage ditches and culverts shall be cleaned out immediately after the backfill has been placed over the trench to assure proper drainage. Where lines are laid across lawns or other special areas, the Contractor shall backfill the trench as soon as possible and clean up in a workmanlike manner. All excess excavation, rock, waste concrete, wire, piping, or other refuse or debris resulting from the work shall be cleaned up and disposed of. The Contractor is responsible to provide an area to dispose of his waste material. Shrubbery shall be taken up ahead of construction, stored, and reset in such a manner as to not damage the plant. Shrubbery damaged by the construction shall be replaced by the Contractor to the satisfaction of the property owner at no cost to the OWNER.

The Contractor must restore all fences, driveways, road surfaces and other public or private property disturbed during construction, to a condition as good as it was when he entered upon the work including the purchase and installation of new materials to replace all that which is injured or disturbed during the course of the work. The entire site shall be finished to a smooth surface with adequate drainage and left in a clean condition such that all yard areas may be mowed with a lawn

mower and all other areas mowed with a pasture mower. Removing and replacing any road surfaces, driveways, and other improvements will not be measured as a separate pay item but shall be considered a subsidiary part of clearing and restoring rights-of-way.

After trenches have had time to settle, areas requiring top soil shall have a 4 inch layer of topsoil spread over all disturbed areas and sod grass shall be laid over the trench areas or seeded using Bermuda seed broadcast at a rate of 3.0 lbs. per 1000 square feet during the season of May thru August. All other seasons will require seeding with rye grass or fescue applied at a rate of 50 lbs. per acre. Topsoil salvaged prior to the water line construction may be used. Following the application of the seed, 10-20-10 fertilizer shall be spread at a rate of 250 lbs. per acre. Contractor shall water and re-water the seeded area as many times as necessary to develop a thick stand of grass. Any rural area or pasture that is restored without substantial damage to the pasture and has recovered a grass cover will not have to be seeded.

1.3.5 GUARANTEE : The developer and/or contractor shall guarantee all materials and appurtenances furnished and work performed for a period of one (1) year from the date of substantial completion. The Developer/Contractor warrants and guarantees for a period of one (1) year from the date of substantial completion of the system that the completed system is free from all defects due to faulty materials or workmanship and the Developer/Contractor shall promptly make such corrections as may be necessary by reason of such defects, including the repairs of any damage to other parts of the system resulting from such defects or workmanship. The TPWA will give notice of observed defects with reasonable promptness. In the event the Developer/Contractor should fail to make such corrections, the TPWA may do so and charge the Developer/Contractor the costs thereby incurred.

SECTION 5: CAPACITY GUIDELINES

5.1 The TPWA has established a water and sewer capacity fee system that implements equitable methods of imposing a proportionate share of the construction costs associated with the overall level of service required to provide, not only the presently needed improvements, but the improvements needed for additional and future areas to be served by the same systems.

5.2 The intent of the capacity guidelines will ensure that new development bears a proportionate share of the improvement costs from the beginning of a planned area of development, to the completion and final stages of future development. That all improvement costs incurred by the TPWA will be distributed by a four tier method to new development through A) the owner/developer, B) future developer/owners, C) the developer/builder, and C) the home/business buyer of the new development properties.

(A) DEVELOPMENT FEES

5.A.1 The initial planning of any development or extension of water and sewer lines will require the owner or developer to submit site plans for the location and planning of the utilities within the planned area of development. TPWA will utilize this information to develop a specific layout for the surrounding service area to be served. Sewer systems shall include the basin service area and water systems shall include the water distribution grid system.

5.A.2 All costs for water and sewer facilities within a specific development that are intended to serve the specific development will be the responsibility of the owner/developer of the development.

5.A.3 If the development includes a water or sewer line or lines that would be designed for **additional capacity** to serve the surrounding area, then the excess capacity cost for the additional sizing of the system shall be determined and the owner/developer will be required to execute a contract with the TPWA for a fee reimbursement as approved by the TPWA Board.

5.A.4 **INITIAL FEE REIMBURSEMENT:** (1) The maximum amount of any initial excess capacity cost to be considered by the TPWA will be 10% of the estimated **TOTAL** cost of the water and/or sewer line extensions that are constructed having **additional capacity design** to serve the

surrounding areas other than the development as determined by the development's Planning Engineer and approved by the TPWA. Stated again, this is the maximum or any percentage up to the maximum.

(2) On small water and/or sewer line projects that will serve additional surrounding areas or pass through properties that will be served by the same lines, the Initial Fee Reimbursement will be the full cost of the additional capacity. This reimbursement will be set at a maximum of $50,000 and shall be documented by the development's Planning Engineer and approved by the TPWA after all construction is completed and all actual costs determined.

5.A.5 **CREDITED FEE REIMBURSEMENT:** Owner/Developers may be eligible for site specific credits or reimbursements for providing such improvements that are constructed for additional and future areas to be served by the same facilities. Credits for specific sites (individual lots/properties or future area developments) will be distributed as each site is completed and occupied.

5.A.6 Credits will be given on excess capacity development costs as site specific credits or developer reimbursement credits up to 30% of the **TOTAL** cost of the water and/or sewer line extensions that are constructed having **additional capacity design** to serve the surrounding areas other than the development as determined by the development's Planning Engineer and approved by the TPWA. Stated again, this is the maximum or any percentage up to the maximum. These credits will be dispersed on an annual basis at such time as determined by the TPWA General Manager when proof of each individual site completed is documented and a request by the developer is submitted for the total number of credits to be received for that year.

Credits will be given to the Owner/Developer until all of the excess capacity development costs have been reimbursed or for a period of 15 years, whichever occurs first.

5.A.7 Excess capacity costs should not exceed 40% of the total project cost. If the excess capacity costs exceed the 40% maximum reimbursement then the Board may adjust the maximum on a case by case basis for full excess capacity reimbursement.

5.A.8 Owner/Developers become eligible for these reimbursements after each development, or phase thereof, has all the facilities constructed. If the owner/developer does not meet the one year maintenance guarantee, as described in Section 4 of these guidelines, the reimbursement shall be used by TPWA to perform the required maintenance on the facilities as needed.

(B) FUTURE DEVELOPMENT IMPACT FEES

5.B.1 At such time that the initial water and sewer services have been constructed and all construction costs tabulated, these costs will serve as a base line for additional reimbursement to developers or TPWA for future developments using the new water and sewer services.

5.B.2 All future developments to be served by the TPWA systems will be required to offset the initial costs to provide these services through a calculated Impact Fee that will be established by the size and scope of the future development within the designed water or sewer system. This Impact Fee is for future developers/owners to share in the base line costs of the initial water and sewer improvements that their development will be impacting and using.

5.B.3 The Impact Fee will be calculated on future development design factors that will include flow demand and capacity and what impact their development will have on the additional capacity of the initial system. The Impact Fee will be assessed and shall be paid to the TPWA prior to the first connection to the initial system.

(C) SERVICE TAPS & FIRE PROTECTION FEES

5.C.1 Water and Sewer Tapping Fees shall be imposed on each connection to the TPWA system and each request for service shall be submitted to the TPWA office at least 48 hours prior to the work order being issued to the TPWA construction crews. An inspection report from the City of Tahlequah Building Inspector's Office for the structure service lines must be submitted with each request or the request will be denied and placed on Temporary Status for a period of 30 days and then dropped from the records for service.

The TPWA may allow a maximum of 25 percent of the service tapping fees for new developments to be used to offset capacity fees that are reimbursed to the developers as noted in Section 5.A.5.

5.C.2 The following fees are the current rates for service to the TPWA water and sewer facilities:

WATER CONNECTIONS :

Water Meter connection and tapping services:

¾" meter & tap----------$ 600.00

1" meter & tap----------$ 850.00

1½" meter & tap----------$1,500.00

2" meter & tap----------$2,700.00

These charges are for the cost recovery and capacity fee consisting of time and material for administrative and field personnel recording and setting the meters. Field material costs include the meter box, connection plumbing, meter, and tapping the main line for service. In cases where two meters are set in the same box, the additional meter will be one-half (½) the listed connection fee. Tap sizing will be regulated by the demand needed and pressure from the existing main to be tapped. Installation of live water taps for private contractors and rural water districts furnishing all material are $300.00 regardless of size

SEWER CONNECTIONS:

Wastewater connection and tapping services:

4" tapping service ----------$ 300.00

6" tapping service ----------$ 400.00

8"or larger ----------Requires Manhole ($900)

All sewer line connections and taps include tapping saddle and 5 feet of pipe to service line.

FIRE SYSTEM CONNECTIONS:

Fire System Connections:

2" ----------$500.00 and $100/year annual service

4" ----------$625.00 and $150/year annual service

6" ----------$750.00 and $200/year annual service

8" ----------$1,000.00 and $300/year annual service

(D) SEWER & WATER DISTRICT ZONE FEES

5.D.1 To the extent that new development is served by the constructed improvements, the TPWA will seek reimbursement for the incurred public facility costs by District Zone Fees. This cost recovery approach assures that each new development is paying for its share of the useful life or remaining capacity and maintenance of the facilities until these costs are recovered or a maximum of 10 years, which ever comes first.

5.D.2 The costs associated with water or sewer district fees will be assessed by the determination of common types of development. Residential fees will be imposed per housing unit. For nonresidential development, fees will be determined by unique demand indicators, such as different types of commercial users, apartments, schools or motels.

5.D.3 The costs associated with water or sewer district fees for existing areas of development such as annexed areas and developed areas of the city with no sanitary sewer facilities shall be split between the TPWA Capital Improvements Budget for projects of this nature and the property owners of the district area to be served. The TPWA will fund the expense of labor and equipment and the property owners will pay the cost of the planning, design and materials on the area to be served by the district. The total property owner costs will be divided by the number of services capable of being served and distributed to each connection as noted in 5.D.2 as a monthly district surcharge for a period not to exceed ten (10) years. All existing property owners which connect to the district within one year of final construction will not be charged the sewer connection and tapping fee. The costs associated with the existing residence service taps are included in the district construction expense.

SECTION 00 3100

AVAILABLE PROJECT INFORMATION

PART 1 - GENERAL

1.1 SUMMARY

A. This Section references other information relevant to the construction of this Project that is available project information.

B. At the request of the Owner, the information identified below represents services that have been provided by others, not as an Architect's Consultant, regarding conditions that affect this Project that are beyond the responsibilities of the Architect and Architect's Consultants. Reference to such information herein is solely for the convenience of the Owner. Architect makes no representation, express or implied, as to the accuracy or validity of the information.

C. Bidders are expected to examine the site and the information available from the Owner to determine for themselves the conditions to be encountered.

D. If conditions other than those indicated in the information available from the Owner are encountered before or during construction, notify the Owner before work continues.

1.2 PROPERTY SURVEY

A. The Owner's Surveyor has performed a property survey and the some of the survey information is included on the Drawings for the convenience of the Contractor.

1.3 GEOTECHNICAL REPORT

A. The Owner's Geotechnical Consultant has made subsurface borings at the Project site, has performed an investigation of the geotechnical conditions, and has prepared a report of the investigation that contains specific requirements of the Contractor.

B. Copies will be provided by the Owner.

C. The information was obtained for use in preparing the foundation design, but is indicative only of the soil conditions where the borings are taken.

1.4 MEDICAL EQUIPMENT DOCUMENTS

A. The Owner's Medical Equipment Planning Consultant has developed medical equipment documents for the Owner's facility and has prepared construction documents.

B. Copies will be provided by the Owner

1.5 RADIATION PROTECTION REPORT

A. The Owner's Radiation Protection Consultant has determined the radiation protection that is required, and has prepared a report that contains specific requirements of the Contractor.

B. Copies will be provided by the Owner.

PART 2 - PRODUCTS (NOT USED)

PART 3 - EXECUTION (NOT USED)

END OF SECTION

SECTION 00 7200

GENERAL CONDITIONS

PART 1 - GENERAL

1.1 GENERAL

A. The General Conditions of this Contract are the American Institute of Architects Document A201, "General Conditions of the Contract for Construction", 2007 Edition as amended by the Owner, hereinafter referred to as the "General Conditions."

B. The General Conditions shall apply to each and every Section of the Work as though written in full therein and are made a part of the Contract Documents by reference.

C. A copy of the Document is included in this Project Manual, and shall apply to each and every Section of the Work as though written in full therein.

PART 2 - (NOT USED)

PART 3 - (NOT USED)

END OF SECTION

AIA® Document A201™ – 2017

General Conditions of the Contract for Construction

for the following PROJECT:
(Name and location or address)

17-13 OSU College of Med. at Hastings Remodel
Tahlequah, OK

THE OWNER:
(Name, legal status and address)

Cherokee Nation Business
777 West Cherokee St.
Catoosa, OK 74015

THE ARCHITECT:
(Name, legal status and address)

James R. Childers, Inc.
45 South 4th Street
Fort Smith, AR 72901

TABLE OF ARTICLES

1 GENERAL PROVISIONS

2 OWNER

3 CONTRACTOR

4 ARCHITECT

5 SUBCONTRACTORS

6 CONSTRUCTION BY OWNER OR BY SEPARATE CONTRACTORS

7 CHANGES IN THE WORK

8 TIME

9 PAYMENTS AND COMPLETION

10 PROTECTION OF PERSONS AND PROPERTY

11 INSURANCE AND BONDS

12 UNCOVERING AND CORRECTION OF WORK

13 MISCELLANEOUS PROVISIONS

ADDITIONS AND DELETIONS:
The author of this document has added information needed for its completion. The author may also have revised the text of the original AIA standard form. An *Additions and Deletions Report* that notes added information as well as revisions to the standard form text is available from the author and should be reviewed. A vertical line in the left margin of this document indicates where the author has added necessary information and where the author has added to or deleted from the original AIA text.

This document has important legal consequences. Consultation with an attorney is encouraged with respect to its completion or modification.

For guidance in modifying this document to include supplementary conditions, see AIA Document A503™, Guide for Supplementary Conditions.

Init.
/

AIA Document A201™ – 2017. Copyright © 1911, 1915, 1918, 1925, 1937, 1951, 1958, 1961, 1963, 1966, 1970, 1976, 1987, 1997, 2007 and 2017 by The American Institute of Architects**. All rights reserved. WARNING: This AIA® Document is protected by U.S. Copyright Law and International Treaties. Unauthorized reproduction or distribution of this AIA® Document, or any portion of it, may result in severe civil and criminal penalties, and will be prosecuted to the maximum extent possible under the law.** This document was produced by AIA software at 10:12:44 ET on 02/08/2019 under Order No.1632503783 which expires on 11/27/2019, and is not for resale.
User Notes: (1110459468)

14 TERMINATION OR SUSPENSION OF THE CONTRACT

15 CLAIMS AND DISPUTES

AIA Document A201™ – 2017. Copyright © 1911, 1915, 1918, 1925, 1937, 1951, 1958, 1961, 1963, 1966, 1970, 1976, 1987, 1997, 2007 and 2017 by The American Institute of Architects**. All rights reserved.** **WARNING: This AIA® Document is protected by U.S. Copyright Law and International Treaties. Unauthorized reproduction or distribution of this AIA® Document, or any portion of it, may result in severe civil and criminal penalties, and will be prosecuted to the maximum extent possible under the law.** This document was produced by AIA software at 10:12:44 ET on 02/08/2019 under Order No.1632503783 which expires on 11/27/2019, and is not for resale.
User Notes: (1110459468)

INDEX
(Topics and numbers in bold are Section headings.)

Acceptance of Nonconforming Work
9.6.6, 9.9.3, **12.3**
Acceptance of Work
9.6.6, 9.8.2, 9.9.3, 9.10.1, 9.10.3, 12.3
Access to Work
3.16, 6.2.1, 12.1
Accident Prevention
10
Acts and Omissions
3.2, 3.3.2, 3.12.8, 3.18, 4.2.3, 8.3.1, 9.5.1, 10.2.5, 10.2.8, 13.3.2, 14.1, 15.1.2, 15.2
Addenda
1.1.1
Additional Costs, Claims for
3.7.4, 3.7.5, 10.3.2, 15.1.5
Additional Inspections and Testing
9.4.2, 9.8.3, 12.2.1, **13.4**
Additional Time, Claims for
3.2.4, 3.7.4, 3.7.5, 3.10.2, 8.3.2, **15.1.6**
Administration of the Contract
3.1.3, **4.2**, 9.4, 9.5
Advertisement or Invitation to Bid
1.1.1
Aesthetic Effect
4.2.13
Allowances
3.8
Applications for Payment
4.2.5, 7.3.9, 9.2, **9.3**, 9.4, 9.5.1, 9.5.4, 9.6.3, 9.7, 9.10
Approvals
2.1.1, 2.3.1, 2.5, 3.1.3, 3.10.2, 3.12.8, 3.12.9, 3.12.10.1, 4.2.7, 9.3.2, 13.4.1
Arbitration
8.3.1, 15.3.2, **15.4**
ARCHITECT
4
Architect, Definition of
4.1.1
Architect, Extent of Authority
2.5, 3.12.7, 4.1.2, 4.2, 5.2, 6.3, 7.1.2, 7.3.4, 7.4, 9.2, 9.3.1, 9.4, 9.5, 9.6.3, 9.8, 9.10.1, 9.10.3, 12.1, 12.2.1, 13.4.1, 13.4.2, 14.2.2, 14.2.4, 15.1.4, 15.2.1
Architect, Limitations of Authority and Responsibility
2.1.1, 3.12.4, 3.12.8, 3.12.10, 4.1.2, 4.2.1, 4.2.2, 4.2.3, 4.2.6, 4.2.7, 4.2.10, 4.2.12, 4.2.13, 5.2.1, 7.4, 9.4.2, 9.5.4, 9.6.4, 15.1.4, 15.2
Architect's Additional Services and Expenses
2.5, 12.2.1, 13.4.2, 13.4.3, 14.2.4
Architect's Administration of the Contract
3.1.3, 3.7.4, 15.2, 9.4.1, 9.5
Architect's Approvals
2.5, 3.1.3, 3.5, 3.10.2, 4.2.7
Architect's Authority to Reject Work
3.5, 4.2.6, 12.1.2, 12.2.1
Architect's Copyright
1.1.7, 1.5
Architect's Decisions
3.7.4, 4.2.6, 4.2.7, 4.2.11, 4.2.12, 4.2.13, 4.2.14, 6.3, 7.3.4, 7.3.9, 8.1.3, 8.3.1, 9.2, 9.4.1, 9.5, 9.8.4, 9.9.1, 13.4.2, 15.2
Architect's Inspections
3.7.4, 4.2.2, 4.2.9, 9.4.2, 9.8.3, 9.9.2, 9.10.1, 13.4
Architect's Instructions
3.2.4, 3.3.1, 4.2.6, 4.2.7, 13.4.2
Architect's Interpretations
4.2.11, 4.2.12
Architect's Project Representative
4.2.10
Architect's Relationship with Contractor
1.1.2, 1.5, 2.3.3, 3.1.3, 3.2.2, 3.2.3, 3.2.4, 3.3.1, 3.4.2, 3.5, 3.7.4, 3.7.5, 3.9.2, 3.9.3, 3.10, 3.11, 3.12, 3.16, 3.18, 4.1.2, 4.2, 5.2, 6.2.2, 7, 8.3.1, 9.2, 9.3, 9.4, 9.5, 9.7, 9.8, 9.9, 10.2.6, 10.3, 11.3, 12, 13.3.2, 13.4, 15.2
Architect's Relationship with Subcontractors
1.1.2, 4.2.3, 4.2.4, 4.2.6, 9.6.3, 9.6.4, 11.3
Architect's Representations
9.4.2, 9.5.1, 9.10.1
Architect's Site Visits
3.7.4, 4.2.2, 4.2.9, 9.4.2, 9.5.1, 9.9.2, 9.10.1, 13.4
Asbestos
10.3.1
Attorneys' Fees
3.18.1, 9.6.8, 9.10.2, 10.3.3
Award of Separate Contracts
6.1.1, 6.1.2
Award of Subcontracts and Other Contracts for Portions of the Work
5.2
Basic Definitions
1.1
Bidding Requirements
1.1.1
Binding Dispute Resolution
8.3.1, 9.7, 11.5, 13.1, 15.1.2, 15.1.3, 15.2.1, 15.2.5, 15.2.6.1, 15.3.1, 15.3.2, 15.3.3, 15.4.1
Bonds, Lien
7.3.4.4, 9.6.8, 9.10.2, 9.10.3
Bonds, Performance, and Payment
7.3.4.4, 9.6.7, 9.10.3, **11.1.2**, 11.1.3, **11.5**
Building Information Models Use and Reliance
1.8
Building Permit
3.7.1
Capitalization
1.3
Certificate of Substantial Completion
9.8.3, 9.8.4, 9.8.5

AIA Document A201™ – 2017. Copyright © 1911, 1915, 1918, 1925, 1937, 1951, 1958, 1961, 1963, 1966, 1970, 1976, 1987, 1997, 2007 and 2017 by The American Institute of Architects**. All rights reserved.** **WARNING: This AIA® Document is protected by U.S. Copyright Law and International Treaties. Unauthorized reproduction or distribution of this AIA® Document, or any portion of it, may result in severe civil and criminal penalties, and will be prosecuted to the maximum extent possible under the law.** This document was produced by AIA software at 10:12:44 ET on 02/08/2019 under Order No.1632503783 which expires on 11/27/2019, and is not for resale.
User Notes: (1110459468)

Certificates for Payment
4.2.1, 4.2.5, 4.2.9, 9.3.3, **9.4**, 9.5, 9.6.1, 9.6.6, 9.7, 9.10.1, 9.10.3, 14.1.1.3, 14.2.4, 15.1.4
Certificates of Inspection, Testing or Approval
13.4.4
Certificates of Insurance
9.10.2
Change Orders
1.1.1, 3.4.2, 3.7.4, 3.8.2.3, 3.11, 3.12.8, 4.2.8, 5.2.3, 7.1.2, 7.1.3, **7.2**, 7.3.2, 7.3.7, 7.3.9, 7.3.10, 8.3.1, 9.3.1.1, 9.10.3, 10.3.2, 11.2, 11.5, 12.1.2
Change Orders, Definition of
7.2.1
CHANGES IN THE WORK
2.2.2, 3.11, 4.2.8, **7**, 7.2.1, 7.3.1, 7.4, 8.3.1, 9.3.1.1, 11.5
Claims, Definition of
15.1.1
Claims, Notice of
1.6.2, 15.1.3
CLAIMS AND DISPUTES
3.2.4, 6.1.1, 6.3, 7.3.9, 9.3.3, 9.10.4, 10.3.3, **15**, 15.4
Claims and Timely Assertion of Claims
15.4.1
Claims for Additional Cost
3.2.4, 3.3.1, 3.7.4, 7.3.9, 9.5.2, 10.2.5, 10.3.2, **15.1.5**
Claims for Additional Time
3.2.4, 3.3.1, 3.7.4, 6.1.1, 8.3.2, 9.5.2, 10.3.2, **15.1.6**
Concealed or Unknown Conditions, Claims for
3.7.4
Claims for Damages
3.2.4, 3.18, 8.3.3, 9.5.1, 9.6.7, 10.2.5, 10.3.3, 11.3, 11.3.2, 14.2.4, 15.1.7
Claims Subject to Arbitration
15.4.1
Cleaning Up
3.15, 6.3
Commencement of the Work, Conditions Relating to
2.2.1, 3.2.2, 3.4.1, 3.7.1, 3.10.1, 3.12.6, 5.2.1, 5.2.3, 6.2.2, 8.1.2, 8.2.2, 8.3.1, 11.1, 11.2, **15.1.5**
Commencement of the Work, Definition of
8.1.2
Communications
3.9.1, **4.2.4**
Completion, Conditions Relating to
3.4.1, 3.11, 3.15, 4.2.2, 4.2.9, 8.2, 9.4.2, 9.8, 9.9.1, 9.10, 12.2, 14.1.2, 15.1.2
COMPLETION, PAYMENTS AND
9
Completion, Substantial
3.10.1, 4.2.9, 8.1.1, 8.1.3, 8.2.3, 9.4.2, 9.8, 9.9.1, 9.10.3, 12.2, 15.1.2
Compliance with Laws
2.3.2, 3.2.3, 3.6, 3.7, 3.12.10, 3.13, 9.6.4, 10.2.2, 13.1, 13.3, 13.4.1, 13.4.2, 13.5, 14.1.1, 14.2.1.3, 15.2.8, 15.4.2, 15.4.3
Concealed or Unknown Conditions
3.7.4, 4.2.8, 8.3.1, 10.3
Conditions of the Contract
1.1.1, 6.1.1, 6.1.4
Consent, Written
3.4.2, 3.14.2, 4.1.2, 9.8.5, 9.9.1, 9.10.2, 9.10.3, 13.2, 15.4.4.2
Consolidation or Joinder
15.4.4
CONSTRUCTION BY OWNER OR BY
SEPARATE CONTRACTORS
1.1.4, **6**
Construction Change Directive, Definition of
7.3.1
Construction Change Directives
1.1.1, 3.4.2, 3.11, 3.12.8, 4.2.8, 7.1.1, 7.1.2, 7.1.3, **7.3**, 9.3.1.1
Construction Schedules, Contractor's
3.10, 3.11, 3.12.1, 3.12.2, 6.1.3, 15.1.6.2
Contingent Assignment of Subcontracts
5.4, 14.2.2.2
Continuing Contract Performance
15.1.4
Contract, Definition of
1.1.2
CONTRACT, TERMINATION OR
SUSPENSION OF THE
5.4.1.1, 5.4.2, 11.5, **14**
Contract Administration
3.1.3, 4, 9.4, 9.5
Contract Award and Execution, Conditions Relating to
3.7.1, 3.10, 5.2, 6.1
Contract Documents, Copies Furnished and Use of
1.5.2, 2.3.6, 5.3
Contract Documents, Definition of
1.1.1
Contract Sum
2.2.2, 2.2.4, 3.7.4, 3.7.5, 3.8, 3.10.2, 5.2.3, 7.3, 7.4, **9.1**, 9.2, 9.4.2, 9.5.1.4, 9.6.7, 9.7, 10.3.2, 11.5, 12.1.2, 12.3, 14.2.4, 14.3.2, 15.1.4.2, **15.1.5, 15.2.5**
Contract Sum, Definition of
9.1
Contract Time
1.1.4, 2.2.1, 2.2.2, 3.7.4, 3.7.5, 3.10.2, 5.2.3, 6.1.5, 7.2.1.3, 7.3.1, 7.3.5, 7.3.6, 7, 7, 7.3.10, 7.4, 8.1.1, 8.2.1, 8.2.3, 8.3.1, 9.5.1, 9.7, 10.3.2, 12.1.1, 12.1.2, 14.3.2, 15.1.4.2, 15.1.6.1, 15.2.5
Contract Time, Definition of
8.1.1
CONTRACTOR
3
Contractor, Definition of
3.1, 6.1.2
Contractor's Construction and Submittal
Schedules
3.10, 3.12.1, 3.12.2, 4.2.3, 6.1.3, 15.1.6.2

AIA Document A201™ – 2017. Copyright © 1911, 1915, 1918, 1925, 1937, 1951, 1958, 1961, 1963, 1966, 1970, 1976, 1987, 1997, 2007 and 2017 by The American Institute of Architects**. All rights reserved.** **WARNING: This AIA® Document is protected by U.S. Copyright Law and International Treaties. Unauthorized reproduction or distribution of this AIA® Document, or any portion of it, may result in severe civil and criminal penalties, and will be prosecuted to the maximum extent possible under the law.** This document was produced by AIA software at 10:12:44 ET on 02/08/2019 under Order No.1632503783 which expires on 11/27/2019, and is not for resale.
User Notes: (1110459468)

Contractor's Employees
2.2.4, 3.3.2, 3.4.3, 3.8.1, 3.9, 3.18.2, 4.2.3, 4.2.6, 10.2, 10.3, 11.3, 14.1, 14.2.1.1
Contractor's Liability Insurance
11.1
Contractor's Relationship with Separate Contractors and Owner's Forces
3.12.5, 3.14.2, 4.2.4, 6, 11.3, 12.2.4
Contractor's Relationship with Subcontractors
1.2.2, 2.2.4, 3.3.2, 3.18.1, 3.18.2, 4.2.4, 5, 9.6.2, 9.6.7, 9.10.2, 11.2, 11.3, 11.4
Contractor's Relationship with the Architect
1.1.2, 1.5, 2.3.3, 3.1.3, 3.2.2, 3.2.3, 3.2.4, 3.3.1, 3.4.2, 3.5.1, 3.7.4, 3.10, 3.11, 3.12, 3.16, 3.18, 4.2, 5.2, 6.2.2, 7, 8.3.1, 9.2, 9.3, 9.4, 9.5, 9.7, 9.8, 9.9, 10.2.6, 10.3, 11.3, 12, 13.4, 15.1.3, 15.2.1
Contractor's Representations
3.2.1, 3.2.2, 3.5, 3.12.6, 6.2.2, 8.2.1, 9.3.3, 9.8.2
Contractor's Responsibility for Those Performing the Work
3.3.2, 3.18, 5.3, 6.1.3, 6.2, 9.5.1, 10.2.8
Contractor's Review of Contract Documents
3.2
Contractor's Right to Stop the Work
2.2.2, 9.7
Contractor's Right to Terminate the Contract
14.1
Contractor's Submittals
3.10, 3.11, 3.12, 4.2.7, 5.2.1, 5.2.3, 9.2, 9.3, 9.8.2, 9.8.3, 9.9.1, 9.10.2, 9.10.3
Contractor's Superintendent
3.9, 10.2.6
Contractor's Supervision and Construction Procedures
1.2.2, 3.3, 3.4, 3.12.10, 4.2.2, 4.2.7, 6.1.3, 6.2.4, 7.1.3, 7.3.4, 7.3.6, 8.2, 10, 12, 14, 15.1.4
Coordination and Correlation
1.2, 3.2.1, 3.3.1, 3.10, 3.12.6, 6.1.3, 6.2.1
Copies Furnished of Drawings and Specifications
1.5, 2.3.6, 3.11
Copyrights
1.5, **3.17**
Correction of Work
2.5, 3.7.3, 9.4.2, 9.8.2, 9.8.3, 9.9.1, 12.1.2, **12.2**, 12.3, 15.1.3.1, 15.1.3.2, 15.2.1
Correlation and Intent of the Contract Documents
1.2
Cost, Definition of
7.3.4
Costs
2.5, 3.2.4, 3.7.3, 3.8.2, 3.15.2, 5.4.2, 6.1.1, 6.2.3, 7.3.3.3, 7.3.4, 7.3.8, 7.3.9, 9.10.2, 10.3.2, 10.3.6, 11.2, 12.1.2, 12.2.1, 12.2.4, 13.4, 14
Cutting and Patching
3.14, 6.2.5
Damage to Construction of Owner or Separate Contractors
3.14.2, 6.2.4, 10.2.1.2, 10.2.5, 10.4, 12.2.4
Damage to the Work
3.14.2, 9.9.1, 10.2.1.2, 10.2.5, 10.4, 12.2.4
Damages, Claims for
3.2.4, 3.18, 6.1.1, 8.3.3, 9.5.1, 9.6.7, 10.3.3, 11.3.2, 11.3, 14.2.4, 15.1.7
Damages for Delay
6.2.3, 8.3.3, 9.5.1.6, 9.7, 10.3.2, 14.3.2
Date of Commencement of the Work, Definition of
8.1.2
Date of Substantial Completion, Definition of
8.1.3
Day, Definition of
8.1.4
Decisions of the Architect
3.7.4, 4.2.6, 4.2.7, 4.2.11, 4.2.12, 4.2.13, 6.3, 7.3.4, 7.3.9, 8.1.3, 8.3.1, 9.2, 9.4, 9.5.1, 9.8.4, 9.9.1, 13.4.2, 14.2.2, 14.2.4, 15.1, 15.2
Decisions to Withhold Certification
9.4.1, **9.5**, 9.7, 14.1.1.3
Defective or Nonconforming Work, Acceptance, Rejection and Correction of
2.5, 3.5, 4.2.6, 6.2.3, 9.5.1, 9.5.3, 9.6.6, 9.8.2, 9.9.3, 9.10.4, 12.2.1
Definitions
1.1, 2.1.1, 3.1.1, 3.5, 3.12.1, 3.12.2, 3.12.3, 4.1.1, 5.1, 6.1.2, 7.2.1, 7.3.1, 8.1, 9.1, 9.8.1, 15.1.1
Delays and Extensions of Time
3.2, **3.7.4**, 5.2.3, 7.2.1, 7.3.1, **7.4**, **8.3**, 9.5.1, **9.7**, 10.3.2, **10.4**, 14.3.2, **15.1.6**, 15.2.5
Digital Data Use and Transmission
1.7
Disputes
6.3, 7.3.9, 15.1, 15.2
Documents and Samples at the Site
3.11
Drawings, Definition of
1.1.5
Drawings and Specifications, Use and Ownership of
3.11
Effective Date of Insurance
8.2.2
Emergencies
10.4, 14.1.1.2, **15.1.5**
Employees, Contractor's
3.3.2, 3.4.3, 3.8.1, 3.9, 3.18.2, 4.2.3, 4.2.6, 10.2, 10.3.3, 11.3, 14.1, 14.2.1.1
Equipment, Labor, or Materials
1.1.3, 1.1.6, 3.4, 3.5, 3.8.2, 3.8.3, 3.12, 3.13, 3.15.1, 4.2.6, 4.2.7, 5.2.1, 6.2.1, 7.3.4, 9.3.2, 9.3.3, 9.5.1.3, 9.10.2, 10.2.1, 10.2.4, 14.2.1.1, 14.2.1.2
Execution and Progress of the Work
1.1.3, 1.2.1, 1.2.2, 2.3.4, 2.3.6, 3.1, 3.3.1, 3.4.1, 3.7.1, 3.10.1, 3.12, 3.14, 4.2, 6.2.2, 7.1.3, 7.3.6, 8.2, 9.5.1, 9.9.1, 10.2, 10.3, 12.1, 12.2, 14.2, 14.3.1, 15.1.4

AIA Document A201™ – 2017. Copyright © 1911, 1915, 1918, 1925, 1937, 1951, 1958, 1961, 1963, 1966, 1970, 1976, 1987, 1997, 2007 and 2017 by The American Institute of Architects**. All rights reserved.** **WARNING: This AIA® Document is protected by U.S. Copyright Law and International Treaties. Unauthorized reproduction or distribution of this AIA® Document, or any portion of it, may result in severe civil and criminal penalties, and will be prosecuted to the maximum extent possible under the law.** This document was produced by AIA software at 10:12:44 ET on 02/08/2019 under Order No.1632503783 which expires on 11/27/2019, and is not for resale.
User Notes: (1110459468)

Extensions of Time
3.2.4, 3.7.4, 5.2.3, 7.2.1, 7.3, 7.4, 9.5.1, 9.7, 10.3.2, 10.4, 14.3, 15.1.6, **15.2.5**
Failure of Payment
9.5.1.3, **9.7**, 9.10.2, 13.5, 14.1.1.3, 14.2.1.2
Faulty Work
(See Defective or Nonconforming Work)
Final Completion and Final Payment
4.2.1, 4.2.9, 9.8.2, **9.10**, 12.3, 14.2.4, 14.4.3
Financial Arrangements, Owner's
2.2.1, 13.2.2, 14.1.1.4
GENERAL PROVISIONS
1
Governing Law
13.1
Guarantees (See Warranty)
Hazardous Materials and Substances
10.2.4, **10.3**
Identification of Subcontractors and Suppliers
5.2.1
Indemnification
3.17, **3.18**, 9.6.8, 9.10.2, 10.3.3, 11.3
Information and Services Required of the Owner
2.1.2, **2.2**, 2.3, 3.2.2, 3.12.10.1, 6.1.3, 6.1.4, 6.2.5, 9.6.1, 9.9.2, 9.10.3, 10.3.3, 11.2, 13.4.1, 13.4.2, 14.1.1.4, 14.1.4, 15.1.4
Initial Decision
15.2
Initial Decision Maker, Definition of
1.1.8
Initial Decision Maker, Decisions
14.2.4, 15.1.4.2, 15.2.1, 15.2.2, 15.2.3, 15.2.4, 15.2.5
Initial Decision Maker, Extent of Authority
14.2.4, 15.1.4.2, 15.2.1, 15.2.2, 15.2.3, 15.2.4, 15.2.5
Injury or Damage to Person or Property
10.2.8, 10.4
Inspections
3.1.3, 3.3.3, 3.7.1, 4.2.2, 4.2.6, 4.2.9, 9.4.2, 9.8.3, 9.9.2, 9.10.1, 12.2.1, 13.4
Instructions to Bidders
1.1.1
Instructions to the Contractor
3.2.4, 3.3.1, 3.8.1, 5.2.1, 7, 8.2.2, 12, 13.4.2
Instruments of Service, Definition of
1.1.7
Insurance
6.1.1, 7.3.4, 8.2.2, 9.3.2, 9.8.4, 9.9.1, 9.10.2, 10.2.5, **11**
Insurance, Notice of Cancellation or Expiration
11.1.4, 11.2.3
Insurance, Contractor's Liability
11.1
Insurance, Effective Date of
8.2.2, 14.4.2
Insurance, Owner's Liability
11.2
Insurance, Property
10.2.5, 11.2, 11.4, 11.5
Insurance, Stored Materials
9.3.2
INSURANCE AND BONDS
11
Insurance Companies, Consent to Partial Occupancy
9.9.1
Insured loss, Adjustment and Settlement of
11.5
Intent of the Contract Documents
1.2.1, 4.2.7, 4.2.12, 4.2.13
Interest
13.5
Interpretation
1.1.8, 1.2.3, **1.4**, 4.1.1, 5.1, 6.1.2, 15.1.1
Interpretations, Written
4.2.11, 4.2.12
Judgment on Final Award
15.4.2
Labor and Materials, Equipment
1.1.3, 1.1.6, **3.4**, 3.5, 3.8.2, 3.8.3, 3.12, 3.13, 3.15.1, 5.2.1, 6.2.1, 7.3.4, 9.3.2, 9.3.3, 9.5.1.3, 9.10.2, 10.2.1, 10.2.4, 14.2.1.1, 14.2.1.2
Labor Disputes
8.3.1
Laws and Regulations
1.5, 2.3.2, 3.2.3, 3.2.4, 3.6, 3.7, 3.12.10, 3.13, 9.6.4, 9.9.1, 10.2.2, 13.1, 13.3.1, 13.4.2, 13.5, 14, 15.2.8, 15.4
Liens
2.1.2, 9.3.1, 9.3.3, 9.6.8, 9.10.2, 9.10.4, 15.2.8
Limitations, Statutes of
12.2.5, 15.1.2, 15.4.1.1
Limitations of Liability
3.2.2, 3.5, 3.12.10, 3.12.10.1, 3.17, 3.18.1, 4.2.6, 4.2.7, 6.2.2, 9.4.2, 9.6.4, 9.6.7, 9.6.8, 10.2.5, 10.3.3, 11.3, 12.2.5, 13.3.1
Limitations of Time
2.1.2, 2.2, 2.5, 3.2.2, 3.10, 3.11, 3.12.5, 3.15.1, 4.2.7, 5.2, 5.3, 5.4.1, 6.2.4, 7.3, 7.4, 8.2, 9.2, 9.3.1, 9.3.3, 9.4.1, 9.5, 9.6, 9.7, 9.8, 9.9, 9.10, 12.2, 13.4, 14, 15, 15.1.2, 15.1.3, 15.1.5
Materials, Hazardous
10.2.4, **10.3**
Materials, Labor, Equipment and
1.1.3, 1.1.6, 3.4.1, 3.5, 3.8.2, 3.8.3, 3.12, 3.13, 3.15.1, 5.2.1, 6.2.1, 7.3.4, 9.3.2, 9.3.3, 9.5.1.3, 9.10.2, 10.2.1.2, 10.2.4, 14.2.1.1, 14.2.1.2
Means, Methods, Techniques, Sequences and Procedures of Construction
3.3.1, 3.12.10, 4.2.2, 4.2.7, 9.4.2
Mechanic's Lien
2.1.2, 9.3.1, 9.3.3, 9.6.8, 9.10.2, 9.10.4, 15.2.8
Mediation
8.3.1, 15.1.3.2, 15.2.1, 15.2.5, 15.2.6, **15.3**, 15.4.1, 15.4.1.1
Minor Changes in the Work
1.1.1, 3.4.2, 3.12.8, 4.2.8, 7.1, **7.4**

AIA Document A201™ – 2017. Copyright © 1911, 1915, 1918, 1925, 1937, 1951, 1958, 1961, 1963, 1966, 1970, 1976, 1987, 1997, 2007 and 2017 by The American Institute of Architects**. All rights reserved.** **WARNING: This AIA® Document is protected by U.S. Copyright Law and International Treaties. Unauthorized reproduction or distribution of this AIA® Document, or any portion of it, may result in severe civil and criminal penalties, and will be prosecuted to the maximum extent possible under the law.** This document was produced by AIA software at 10:12:44 ET on 02/08/2019 under Order No.1632503783 which expires on 11/27/2019, and is not for resale.
User Notes: (1110459468)

MISCELLANEOUS PROVISIONS
13
Modifications, Definition of
1.1.1
Modifications to the Contract
1.1.1, 1.1.2, 2.5, 3.11, 4.1.2, 4.2.1, 5.2.3, 7, 8.3.1, 9.7, 10.3.2
Mutual Responsibility
6.2
Nonconforming Work, Acceptance of
9.6.6, 9.9.3, **12.3**
Nonconforming Work, Rejection and Correction of
2.4, 2.5, 3.5, 4.2.6, 6.2.4, 9.5.1, 9.8.2, 9.9.3, 9.10.4, 12.2
Notice
1.6, 1.6.1, 1.6.2, 2.1.2, 2.2.2., 2.2.3, 2.2.4, 2.5, 3.2.4, 3.3.1, 3.7.4, 3.7.5, 3.9.2, 3.12.9, 3.12.10, 5.2.1, 7.4, 8.2.2 9.6.8, 9.7, 9.10.1, 10.2.8, 10.3.2, 11.5, 12.2.2.1, 13.4.1, 13.4.2, 14.1, 14.2.2, 14.4.2, 15.1.3, 15.1.5, 15.1.6, 15.4.1
Notice of Cancellation or Expiration of Insurance
11.1.4, 11.2.3
Notice of Claims
1.6.2, 2.1.2, 3.7.4, 9.6.8, 10.2.8, **15.1.3**, 15.1.5, 15.1.6, 15.2.8, 15.3.2, 15.4.1
Notice of Testing and Inspections
13.4.1, 13.4.2
Observations, Contractor's
3.2, 3.7.4
Occupancy
2.3.1, 9.6.6, 9.8
Orders, Written
1.1.1, 2.4, 3.9.2, 7, 8.2.2, 11.5, 12.1, 12.2.2.1, 13.4.2, 14.3.1
OWNER
2
Owner, Definition of
2.1.1
Owner, Evidence of Financial Arrangements
2.2, 13.2.2, 14.1.1.4
Owner, Information and Services Required of the
2.1.2, **2.2**, 2.3, 3.2.2, 3.12.10, 6.1.3, 6.1.4, 6.2.5, 9.3.2, 9.6.1, 9.6.4, 9.9.2, 9.10.3, 10.3.3, 11.2, 13.4.1, 13.4.2, 14.1.1.4, 14.1.4, 15.1.4
Owner's Authority
1.5, 2.1.1, 2.3.32.4, 2.5, 3.4.2, 3.8.1, 3.12.10, 3.14.2, 4.1.2, 4.2.4, 4.2.9, 5.2.1, 5.2.4, 5.4.1, 6.1, 6.3, 7.2.1, 7.3.1, 8.2.2, 8.3.1, 9.3.2, 9.5.1, 9.6.4, 9.9.1, 9.10.2, 10.3.2, 11.4, 11.5, 12.2.2, 12.3, 13.2.2, 14.3, 14.4, 15.2.7
Owner's Insurance
11.2
Owner's Relationship with Subcontractors
1.1.2, 5.2, 5.3, 5.4, 9.6.4, 9.10.2, 14.2.2
Owner's Right to Carry Out the Work
2.5, 14.2.2
Owner's Right to Clean Up
6.3
Owner's Right to Perform Construction and to Award Separate Contracts
6.1
Owner's Right to Stop the Work
2.4
Owner's Right to Suspend the Work
14.3
Owner's Right to Terminate the Contract
14.2, 14.4
Ownership and Use of Drawings, Specifications and Other Instruments of Service
1.1.1, 1.1.6, 1.1.7, **1.5**, 2.3.6, 3.2.2, 3.11, 3.17, 4.2.12, 5.3
Partial Occupancy or Use
9.6.6, **9.9**
Patching, Cutting and
3.14, 6.2.5
Patents
3.17
Payment, Applications for
4.2.5, 7.3.9, 9.2, **9.3**, 9.4, 9.5, 9.6.3, 9.7, 9.8.5, 9.10.1, 14.2.3, 14.2.4, 14.4.3
Payment, Certificates for
4.2.5, 4.2.9, 9.3.3, **9.4**, 9.5, 9.6.1, 9.6.6, 9.7, 9.10.1, 9.10.3, 14.1.1.3, 14.2.4
Payment, Failure of
9.5.1.3, **9.7**, 9.10.2, 13.5, 14.1.1.3, 14.2.1.2
Payment, Final
4.2.1, 4.2.9, **9.10**, 12.3, 14.2.4, 14.4.3
Payment Bond, Performance Bond and
7.3.4.4, 9.6.7, 9.10.3, **11.1.2**
Payments, Progress
9.3, **9.6**, 9.8.5, 9.10.3, 14.2.3, 15.1.4
PAYMENTS AND COMPLETION
9
Payments to Subcontractors
5.4.2, 9.5.1.3, 9.6.2, 9.6.3, 9.6.4, 9.6.7, 14.2.1.2
PCB
10.3.1
Performance Bond and Payment Bond
7.3.4.4, 9.6.7, 9.10.3, **11.1.2**
Permits, Fees, Notices and Compliance with Laws
2.3.1, **3.7**, 3.13, 7.3.4.4, 10.2.2
PERSONS AND PROPERTY, PROTECTION OF
10
Polychlorinated Biphenyl
10.3.1
Product Data, Definition of
3.12.2
Product Data and Samples, Shop Drawings
3.11, **3.12**, 4.2.7
Progress and Completion
4.2.2, **8.2**, 9.8, 9.9.1, 14.1.4, 15.1.4
Progress Payments
9.3, **9.6**, 9.8.5, 9.10.3, 14.2.3, 15.1.4

AIA Document A201™ – 2017. Copyright © 1911, 1915, 1918, 1925, 1937, 1951, 1958, 1961, 1963, 1966, 1970, 1976, 1987, 1997, 2007 and 2017 by The American Institute of Architects**. All rights reserved.** **WARNING: This AIA® Document is protected by U.S. Copyright Law and International Treaties. Unauthorized reproduction or distribution of this AIA® Document, or any portion of it, may result in severe civil and criminal penalties, and will be prosecuted to the maximum extent possible under the law.** This document was produced by AIA software at 10:12:44 ET on 02/08/2019 under Order No.1632503783 which expires on 11/27/2019, and is not for resale.
User Notes: (1110459468)

Project, Definition of
1.1.4
Project Representatives
4.2.10
Property Insurance
10.2.5, **11.2**
Proposal Requirements
1.1.1
PROTECTION OF PERSONS AND PROPERTY
10
Regulations and Laws
1.5, 2.3.2, 3.2.3, 3.6, 3.7, 3.12.10, 3.13, 9.6.4, 9.9.1, 10.2.2, 13.1, 13.3, 13.4.1, 13.4.2, 13.5, 14, 15.2.8, 15.4
Rejection of Work
4.2.6, 12.2.1
Releases and Waivers of Liens
9.3.1, 9.10.2
Representations
3.2.1, 3.5, 3.12.6, 8.2.1, 9.3.3, 9.4.2, 9.5.1, 9.10.1
Representatives
2.1.1, 3.1.1, 3.9, 4.1.1, 4.2.10, 13.2.1
Responsibility for Those Performing the Work
3.3.2, 3.18, 4.2.2, 4.2.3, 5.3, 6.1.3, 6.2, 6.3, 9.5.1, 10
Retainage
9.3.1, 9.6.2, 9.8.5, 9.9.1, 9.10.2, 9.10.3
Review of Contract Documents and Field Conditions by Contractor
3.2, 3.12.7, 6.1.3
Review of Contractor's Submittals by Owner and Architect
3.10.1, 3.10.2, 3.11, 3.12, 4.2, 5.2, 6.1.3, 9.2, 9.8.2
Review of Shop Drawings, Product Data and Samples by Contractor
3.12
Rights and Remedies
1.1.2, 2.4, 2.5, 3.5, 3.7.4, 3.15.2, 4.2.6, 5.3, 5.4, 6.1, 6.3, 7.3.1, 8.3, 9.5.1, 9.7, 10.2.5, 10.3, 12.2.1, 12.2.2, 12.2.4, **13.3**, 14, 15.4
Royalties, Patents and Copyrights
3.17
Rules and Notices for Arbitration
15.4.1
Safety of Persons and Property
10.2, 10.4
Safety Precautions and Programs
3.3.1, 4.2.2, 4.2.7, 5.3, **10.1**, 10.2, 10.4
Samples, Definition of
3.12.3
Samples, Shop Drawings, Product Data and
3.11, **3.12**, 4.2.7
Samples at the Site, Documents and
3.11
Schedule of Values
9.2, 9.3.1
Schedules, Construction
3.10, 3.12.1, 3.12.2, 6.1.3, 15.1.6.2
Separate Contracts and Contractors
1.1.4, 3.12.5, 3.14.2, 4.2.4, 4.2.7, 6, 8.3.1, 12.1.2
Separate Contractors, Definition of
6.1.1
Shop Drawings, Definition of
3.12.1
Shop Drawings, Product Data and Samples
3.11, **3.12**, 4.2.7
Site, Use of
3.13, 6.1.1, 6.2.1
Site Inspections
3.2.2, 3.3.3, 3.7.1, 3.7.4, 4.2, 9.9.2, 9.4.2, 9.10.1, 13.4
Site Visits, Architect's
3.7.4, 4.2.2, 4.2.9, 9.4.2, 9.5.1, 9.9.2, 9.10.1, 13.4
Special Inspections and Testing
4.2.6, 12.2.1, 13.4
Specifications, Definition of
1.1.6
Specifications
1.1.1, **1.1.6**, 1.2.2, 1.5, 3.12.10, 3.17, 4.2.14
Statute of Limitations
15.1.2, 15.4.1.1
Stopping the Work
2.2.2, 2.4, 9.7, 10.3, 14.1
Stored Materials
6.2.1, 9.3.2, 10.2.1.2, 10.2.4
Subcontractor, Definition of
5.1.1
SUBCONTRACTORS
5
Subcontractors, Work by
1.2.2, 3.3.2, 3.12.1, 3.18, 4.2.3, 5.2.3, 5.3, 5.4, 9.3.1.2, 9.6.7
Subcontractual Relations
5.3, 5.4, 9.3.1.2, 9.6, 9.10, 10.2.1, 14.1, 14.2.1
Submittals
3.10, 3.11, 3.12, 4.2.7, 5.2.1, 5.2.3, 7.3.4, 9.2, 9.3, 9.8, 9.9.1, 9.10.2, 9.10.3
Submittal Schedule
3.10.2, 3.12.5, 4.2.7
Subrogation, Waivers of
6.1.1, **11.3**
Substances, Hazardous
10.3
Substantial Completion
4.2.9, 8.1.1, 8.1.3, 8.2.3, 9.4.2, **9.8**, 9.9.1, 9.10.3, 12.2, 15.1.2
Substantial Completion, Definition of
9.8.1
Substitution of Subcontractors
5.2.3, 5.2.4
Substitution of Architect
2.3.3
Substitutions of Materials
3.4.2, 3.5, 7.3.8
Sub-subcontractor, Definition of
5.1.2

AIA Document A201™ – 2017. Copyright © 1911, 1915, 1918, 1925, 1937, 1951, 1958, 1961, 1963, 1966, 1970, 1976, 1987, 1997, 2007 and 2017 by The American Institute of Architects**. All rights reserved.** **WARNING: This AIA® Document is protected by U.S. Copyright Law and International Treaties. Unauthorized reproduction or distribution of this AIA® Document, or any portion of it, may result in severe civil and criminal penalties, and will be prosecuted to the maximum extent possible under the law.** This document was produced by AIA software at 10:12:44 ET on 02/08/2019 under Order No.1632503783 which expires on 11/27/2019, and is not for resale.
User Notes: (1110459468)

Subsurface Conditions
3.7.4
Successors and Assigns
13.2
Superintendent
3.9, 10.2.6
Supervision and Construction Procedures
1.2.2, **3.3**, 3.4, 3.12.10, 4.2.2, 4.2.7, 6.1.3, 6.2.4, 7.1.3, 7.3.4, 8.2, 8.3.1, 9.4.2, 10, 12, 14, 15.1.4
Suppliers
1.5, 3.12.1, 4.2.4, 4.2.6, 5.2.1, 9.3, 9.4.2, 9.5.4, 9.6, 9.10.5, 14.2.1
Surety
5.4.1.2, 9.6.8, 9.8.5, 9.10.2, 9.10.3, 11.1.2, 14.2.2, 15.2.7
Surety, Consent of
9.8.5, 9.10.2, 9.10.3
Surveys
1.1.7, 2.3.4
Suspension by the Owner for Convenience
14.3
Suspension of the Work
3.7.5, 5.4.2, 14.3
Suspension or Termination of the Contract
5.4.1.1, 14
Taxes
3.6, 3.8.2.1, 7.3.4.4
Termination by the Contractor
14.1, 15.1.7
Termination by the Owner for Cause
5.4.1.1, **14.2,** 15.1.7
Termination by the Owner for Convenience
14.4
Termination of the Architect
2.3.3
Termination of the Contractor Employment
14.2.2

TERMINATION OR SUSPENSION OF THE CONTRACT
14
Tests and Inspections
3.1.3, 3.3.3, 3.7.1, 4.2.2, 4.2.6, 4.2.9, 9.4.2, 9.8.3, 9.9.2, 9.10.1, 10.3.2, 12.2.1, **13.4**
TIME
8
Time, Delays and Extensions of
3.2.4, 3.7.4, 5.2.3, 7.2.1, 7.3.1, 7.4, **8.3**, 9.5.1, 9.7, 10.3.2, 10.4, 14.3.2, 15.1.6, 15.2.5
Time Limits
2.1.2, 2.2, 2.5, 3.2.2, 3.10, 3.11, 3.12.5, 3.15.1, 4.2, 5.2, 5.3, 5.4, 6.2.4, 7.3, 7.4, 8.2, 9.2, 9.3.1, 9.3.3, 9.4.1, 9.5, 9.6, 9.7, 9.8, 9.9, 9.10, 12.2, 13.4, 14, 15.1.2, 15.1.3, 15.4
Time Limits on Claims
3.7.4, 10.2.8, 15.1.2, 15.1.3
Title to Work
9.3.2, 9.3.3
UNCOVERING AND CORRECTION OF WORK
12
Uncovering of Work
12.1
Unforeseen Conditions, Concealed or Unknown
3.7.4, 8.3.1, 10.3
Unit Prices
7.3.3.2, 9.1.2
Use of Documents
1.1.1, 1.5, 2.3.6, 3.12.6, 5.3
Use of Site
3.13, 6.1.1, 6.2.1
Values, Schedule of
9.2, 9.3.1
Waiver of Claims by the Architect
13.3.2
Waiver of Claims by the Contractor
9.10.5, 13.3.2, **15.1.7**
Waiver of Claims by the Owner
9.9.3, 9.10.3, 9.10.4, 12.2.2.1, 13.3.2, 14.2.4, **15.1.7**
Waiver of Consequential Damages
14.2.4, 15.1.7
Waiver of Liens
9.3, 9.10.2, 9.10.4
Waivers of Subrogation
6.1.1, **11.3**
Warranty
3.5, 4.2.9, 9.3.3, 9.8.4, 9.9.1, 9.10.2, 9.10.4, 12.2.2, 15.1.2
Weather Delays
8.3, 15.1.6.2
Work, Definition of
1.1.3
Written Consent
1.5.2, 3.4.2, 3.7.4, 3.12.8, 3.14.2, 4.1.2, 9.3.2, 9.10.3, 13.2, 13.3.2, 15.4.4.2
Written Interpretations
4.2.11, 4.2.12
Written Orders
1.1.1, 2.4, 3.9, 7, 8.2.2, 12.1, 12.2, 13.4.2, 14.3.1

AIA Document A201™ – 2017. Copyright © 1911, 1915, 1918, 1925, 1937, 1951, 1958, 1961, 1963, 1966, 1970, 1976, 1987, 1997, 2007 and 2017 by The American Institute of Architects**. All rights reserved.** **WARNING: This AIA® Document is protected by U.S. Copyright Law and International Treaties. Unauthorized reproduction or distribution of this AIA® Document, or any portion of it, may result in severe civil and criminal penalties, and will be prosecuted to the maximum extent possible under the law.** This document was produced by AIA software at 10:12:44 ET on 02/08/2019 under Order No.1632503783 which expires on 11/27/2019, and is not for resale.
User Notes: (1110459468)

ARTICLE 1 GENERAL PROVISIONS

§ 1.1 Basic Definitions

§ 1.1.1 The Contract Documents

The Contract Documents are enumerated in the Agreement between the Owner and Contractor (hereinafter the Agreement) and consist of the Agreement, Conditions of the Contract (General, Supplementary and other Conditions), Drawings, Specifications, Addenda issued prior to execution of the Contract, other documents listed in the Agreement, and Modifications issued after execution of the Contract. A Modification is (1) a written amendment to the Contract signed by both parties, (2) a Change Order, (3) a Construction Change Directive, or (4) a written order for a minor change in the Work issued by the Architect. Unless specifically enumerated in the Agreement, the Contract Documents do not include the advertisement or invitation to bid, Instructions to Bidders, sample forms, other information furnished by the Owner in anticipation of receiving bids or proposals, the Contractor's bid or proposal, or portions of Addenda relating to bidding or proposal requirements.

§ 1.1.2 The Contract

The Contract Documents form the Contract for Construction. The Contract represents the entire and integrated agreement between the parties hereto and supersedes prior negotiations, representations, or agreements, either written or oral. The Contract may be amended or modified only by a Modification. The Contract Documents shall not be construed to create a contractual relationship of any kind (1) between the Contractor and the Architect or the Architect's consultants, (2) between the Owner and a Subcontractor or a Sub-subcontractor, (3) between the Owner and the Architect or the Architect's consultants, or (4) between any persons or entities other than the Owner and the Contractor. The Architect shall, however, be entitled to performance and enforcement of obligations under the Contract intended to facilitate performance of the Architect's duties.

§ 1.1.3 The Work

The term "Work" means the construction and services required by the Contract Documents, whether completed or partially completed, and includes all other labor, materials, equipment, and services provided or to be provided by the Contractor to fulfill the Contractor's obligations. The Work may constitute the whole or a part of the Project.

§ 1.1.4 The Project

The Project is the total construction of which the Work performed under the Contract Documents may be the whole or a part and which may include construction by the Owner and by Separate Contractors.

§ 1.1.5 The Drawings

The Drawings are the graphic and pictorial portions of the Contract Documents showing the design, location and dimensions of the Work, generally including plans, elevations, sections, details, schedules, and diagrams.

§ 1.1.6 The Specifications

The Specifications are that portion of the Contract Documents consisting of the written requirements for materials, equipment, systems, standards and workmanship for the Work, and performance of related services.

§ 1.1.7 Instruments of Service

Instruments of Service are representations, in any medium of expression now known or later developed, of the tangible and intangible creative work performed by the Architect and the Architect's consultants under their respective professional services agreements. Instruments of Service may include, without limitation, studies, surveys, models, sketches, drawings, specifications, and other similar materials.

§ 1.1.8 Initial Decision Maker

The Initial Decision Maker is the person identified in the Agreement to render initial decisions on Claims in accordance with Section 15.2. The Initial Decision Maker shall not show partiality to the Owner or Contractor and shall not be liable for results of interpretations or decisions rendered in good faith.

§ 1.2 Correlation and Intent of the Contract Documents

§ 1.2.1 The intent of the Contract Documents is to include all items necessary for the proper execution and completion of the Work by the Contractor. The Contract Documents are complementary, and what is required by one shall be as binding as if required by all; performance by the Contractor shall be required only to the extent consistent with the Contract Documents and reasonably inferable from them as being necessary to produce the indicated results.

AIA Document A201™ – 2017. Copyright © 1911, 1915, 1918, 1925, 1937, 1951, 1958, 1961, 1963, 1966, 1970, 1976, 1987, 1997, 2007 and 2017 by The American Institute of Architects**. All rights reserved. WARNING: This AIA® Document is protected by U.S. Copyright Law and International Treaties. Unauthorized reproduction or distribution of this AIA® Document, or any portion of it, may result in severe civil and criminal penalties, and will be prosecuted to the maximum extent possible under the law.** This document was produced by AIA software at 10:12:44 ET on 02/08/2019 under Order No.1632503783 which expires on 11/27/2019, and is not for resale.
User Notes: (1110459468)

§ 1.2.1.1 The invalidity of any provision of the Contract Documents shall not invalidate the Contract or its remaining provisions. If it is determined that any provision of the Contract Documents violates any law, or is otherwise invalid or unenforceable, then that provision shall be revised to the extent necessary to make that provision legal and enforceable. In such case the Contract Documents shall be construed, to the fullest extent permitted by law, to give effect to the parties' intentions and purposes in executing the Contract.

§ 1.2.2 Organization of the Specifications into divisions, sections and articles, and arrangement of Drawings shall not control the Contractor in dividing the Work among Subcontractors or in establishing the extent of Work to be performed by any trade.

§ 1.2.3 Unless otherwise stated in the Contract Documents, words that have well-known technical or construction industry meanings are used in the Contract Documents in accordance with such recognized meanings.

§ 1.3 Capitalization

Terms capitalized in these General Conditions include those that are (1) specifically defined, (2) the titles of numbered articles, or (3) the titles of other documents published by the American Institute of Architects.

§ 1.4 Interpretation

In the interest of brevity the Contract Documents frequently omit modifying words such as "all" and "any" and articles such as "the" and "an," but the fact that a modifier or an article is absent from one statement and appears in another is not intended to affect the interpretation of either statement.

§ 1.5 Ownership and Use of Drawings, Specifications, and Other Instruments of Service

§ 1.5.1 The Architect and the Architect's consultants shall be deemed the authors and owners of their respective Instruments of Service, including the Drawings and Specifications, and retain all common law, statutory, and other reserved rights in their Instruments of Service, including copyrights. The Contractor, Subcontractors, Sub-subcontractors, and suppliers shall not own or claim a copyright in the Instruments of Service. Submittal or distribution to meet official regulatory requirements or for other purposes in connection with the Project is not to be construed as publication in derogation of the Architect's or Architect's consultants' reserved rights.

§ 1.5.2 The Contractor, Subcontractors, Sub-subcontractors, and suppliers are authorized to use and reproduce the Instruments of Service provided to them, subject to any protocols established pursuant to Sections 1.7 and 1.8, solely and exclusively for execution of the Work. All copies made under this authorization shall bear the copyright notice, if any, shown on the Instruments of Service. The Contractor, Subcontractors, Sub-subcontractors, and suppliers may not use the Instruments of Service on other projects or for additions to the Project outside the scope of the Work without the specific written consent of the Owner, Architect, and the Architect's consultants.

§ 1.6 Notice

§ 1.6.1 Except as otherwise provided in Section 1.6.2, where the Contract Documents require one party to notify or give notice to the other party, such notice shall be provided in writing to the designated representative of the party to whom the notice is addressed and shall be deemed to have been duly served if delivered in person, by mail, by courier, or by electronic transmission if a method for electronic transmission is set forth in the Agreement.

§ 1.6.2 Notice of Claims as provided in Section 15.1.3 shall be provided in writing and shall be deemed to have been duly served only if delivered to the designated representative of the party to whom the notice is addressed by certified or registered mail, or by courier providing proof of delivery.

§ 1.7 Digital Data Use and Transmission

The parties shall agree upon protocols governing the transmission and use of Instruments of Service or any other information or documentation in digital form. The parties will use AIA Document E203™–2013, Building Information Modeling and Digital Data Exhibit, to establish the protocols for the development, use, transmission, and exchange of digital data.

§ 1.8 Building Information Models Use and Reliance

Any use of, or reliance on, all or a portion of a building information model without agreement to protocols governing the use of, and reliance on, the information contained in the model and without having those protocols set forth in AIA Document E203™–2013, Building Information Modeling and Digital Data Exhibit, and the requisite AIA Document

AIA Document A201™ – 2017. Copyright © 1911, 1915, 1918, 1925, 1937, 1951, 1958, 1961, 1963, 1966, 1970, 1976, 1987, 1997, 2007 and 2017 by The American Institute of Architects**. All rights reserved.** **WARNING: This AIA® Document is protected by U.S. Copyright Law and International Treaties. Unauthorized reproduction or distribution of this AIA® Document, or any portion of it, may result in severe civil and criminal penalties, and will be prosecuted to the maximum extent possible under the law.** This document was produced by AIA software at 10:12:44 ET on 02/08/2019 under Order No.1632503783 which expires on 11/27/2019, and is not for resale.
User Notes: (1110459468)

G202™–2013, Project Building Information Modeling Protocol Form, shall be at the using or relying party's sole risk and without liability to the other party and its contractors or consultants, the authors of, or contributors to, the building information model, and each of their agents and employees.

ARTICLE 2 OWNER

§ 2.1 General

§ 2.1.1 The Owner is the person or entity identified as such in the Agreement and is referred to throughout the Contract Documents as if singular in number. The Owner shall designate in writing a representative who shall have express authority to bind the Owner with respect to all matters requiring the Owner's approval or authorization. Except as otherwise provided in Section 4.2.1, the Architect does not have such authority. The term "Owner" means the Owner or the Owner's authorized representative.

§ 2.1.2 The Owner shall furnish to the Contractor, within fifteen days after receipt of a written request, information necessary and relevant for the Contractor to evaluate, give notice of, or enforce mechanic's lien rights. Such information shall include a correct statement of the record legal title to the property on which the Project is located, usually referred to as the site, and the Owner's interest therein.

§ 2.2 Evidence of the Owner's Financial Arrangements

§ 2.2.1 Prior to commencement of the Work and upon written request by the Contractor, the Owner shall furnish to the Contractor reasonable evidence that the Owner has made financial arrangements to fulfill the Owner's obligations under the Contract. The Contractor shall have no obligation to commence the Work until the Owner provides such evidence. If commencement of the Work is delayed under this Section 2.2.1, the Contract Time shall be extended appropriately.

§ 2.2.2 Following commencement of the Work and upon written request by the Contractor, the Owner shall furnish to the Contractor reasonable evidence that the Owner has made financial arrangements to fulfill the Owner's obligations under the Contract only if (1) the Owner fails to make payments to the Contractor as the Contract Documents require; (2) the Contractor identifies in writing a reasonable concern regarding the Owner's ability to make payment when due; or (3) a change in the Work materially changes the Contract Sum. If the Owner fails to provide such evidence, as required, within fourteen days of the Contractor's request, the Contractor may immediately stop the Work and, in that event, shall notify the Owner that the Work has stopped. However, if the request is made because a change in the Work materially changes the Contract Sum under (3) above, the Contractor may immediately stop only that portion of the Work affected by the change until reasonable evidence is provided. If the Work is stopped under this Section 2.2.2, the Contract Time shall be extended appropriately and the Contract Sum shall be increased by the amount of the Contractor's reasonable costs of shutdown, delay and start-up, plus interest as provided in the Contract Documents.

§ 2.2.3 After the Owner furnishes evidence of financial arrangements under this Section 2.2, the Owner shall not materially vary such financial arrangements without prior notice to the Contractor.

§ 2.2.4 Where the Owner has designated information furnished under this Section 2.2 as "confidential," the Contractor shall keep the information confidential and shall not disclose it to any other person. However, the Contractor may disclose "confidential" information, after seven (7) days' notice to the Owner, where disclosure is required by law, including a subpoena or other form of compulsory legal process issued by a court or governmental entity, or by court or arbitrator(s) order. The Contractor may also disclose "confidential" information to its employees, consultants, sureties, Subcontractors and their employees, Sub-subcontractors, and others who need to know the content of such information solely and exclusively for the Project and who agree to maintain the confidentiality of such information.

§ 2.3 Information and Services Required of the Owner

§ 2.3.1 Except for permits and fees that are the responsibility of the Contractor under the Contract Documents, including those required under Section 3.7.1, the Owner shall secure and pay for necessary approvals, easements, assessments and charges required for construction, use or occupancy of permanent structures or for permanent changes in existing facilities.

§ 2.3.2 The Owner shall retain an architect lawfully licensed to practice architecture, or an entity lawfully practicing architecture, in the jurisdiction where the Project is located. That person or entity is identified as the Architect in the Agreement and is referred to throughout the Contract Documents as if singular in number.

AIA Document A201™ – 2017. Copyright © 1911, 1915, 1918, 1925, 1937, 1951, 1958, 1961, 1963, 1966, 1970, 1976, 1987, 1997, 2007 and 2017 by The American Institute of Architects**. All rights reserved.** **WARNING: This AIA® Document is protected by U.S. Copyright Law and International Treaties. Unauthorized reproduction or distribution of this AIA® Document, or any portion of it, may result in severe civil and criminal penalties, and will be prosecuted to the maximum extent possible under the law.** This document was produced by AIA software at 10:12:44 ET on 02/08/2019 under Order No.1632503783 which expires on 11/27/2019, and is not for resale.
User Notes: (1110459468)

§ 2.3.3 If the employment of the Architect terminates, the Owner shall employ a successor to whom the Contractor has no reasonable objection and whose status under the Contract Documents shall be that of the Architect.

§ 2.3.4 The Owner shall furnish surveys describing physical characteristics, legal limitations and utility locations for the site of the Project, and a legal description of the site. The Contractor shall be entitled to rely on the accuracy of information furnished by the Owner but shall exercise proper precautions relating to the safe performance of the Work.

§ 2.3.5 The Owner shall furnish information or services required of the Owner by the Contract Documents with reasonable promptness. The Owner shall also furnish any other information or services under the Owner's control and relevant to the Contractor's performance of the Work with reasonable promptness after receiving the Contractor's written request for such information or services.

§ 2.3.6 Unless otherwise provided in the Contract Documents, the Owner shall furnish to the Contractor one copy of the Contract Documents for purposes of making reproductions pursuant to Section 1.5.2.

§ 2.4 Owner's Right to Stop the Work

If the Contractor fails to correct Work that is not in accordance with the requirements of the Contract Documents as required by Section 12.2 or repeatedly fails to carry out Work in accordance with the Contract Documents, the Owner may issue a written order to the Contractor to stop the Work, or any portion thereof, until the cause for such order has been eliminated; however, the right of the Owner to stop the Work shall not give rise to a duty on the part of the Owner to exercise this right for the benefit of the Contractor or any other person or entity, except to the extent required by Section 6.1.3.

§ 2.5 Owner's Right to Carry Out the Work

If the Contractor defaults or neglects to carry out the Work in accordance with the Contract Documents and fails within a ten-day period after receipt of notice from the Owner to commence and continue correction of such default or neglect with diligence and promptness, the Owner may, without prejudice to other remedies the Owner may have, correct such default or neglect. Such action by the Owner and amounts charged to the Contractor are both subject to prior approval of the Architect and the Architect may, pursuant to Section 9.5.1, withhold or nullify a Certificate for Payment in whole or in part, to the extent reasonably necessary to reimburse the Owner for the reasonable cost of correcting such deficiencies, including Owner's expenses and compensation for the Architect's additional services made necessary by such default, neglect, or failure. If current and future payments are not sufficient to cover such amounts, the Contractor shall pay the difference to the Owner. If the Contractor disagrees with the actions of the Owner or the Architect, or the amounts claimed as costs to the Owner, the Contractor may file a Claim pursuant to Article 15.

ARTICLE 3 CONTRACTOR

§ 3.1 General

§ 3.1.1 The Contractor is the person or entity identified as such in the Agreement and is referred to throughout the Contract Documents as if singular in number. The Contractor shall be lawfully licensed, if required in the jurisdiction where the Project is located. The Contractor shall designate in writing a representative who shall have express authority to bind the Contractor with respect to all matters under this Contract. The term "Contractor" means the Contractor or the Contractor's authorized representative.

§ 3.1.2 The Contractor shall perform the Work in accordance with the Contract Documents.

§ 3.1.3 The Contractor shall not be relieved of its obligations to perform the Work in accordance with the Contract Documents either by activities or duties of the Architect in the Architect's administration of the Contract, or by tests, inspections or approvals required or performed by persons or entities other than the Contractor.

§ 3.2 Review of Contract Documents and Field Conditions by Contractor

§ 3.2.1 Execution of the Contract by the Contractor is a representation that the Contractor has visited the site, become generally familiar with local conditions under which the Work is to be performed, and correlated personal observations with requirements of the Contract Documents.

AIA Document A201™ – 2017. Copyright © 1911, 1915, 1918, 1925, 1937, 1951, 1958, 1961, 1963, 1966, 1970, 1976, 1987, 1997, 2007 and 2017 by The American Institute of Architects**. All rights reserved.** **WARNING: This AIA® Document is protected by U.S. Copyright Law and International Treaties. Unauthorized reproduction or distribution of this AIA® Document, or any portion of it, may result in severe civil and criminal penalties, and will be prosecuted to the maximum extent possible under the law.** This document was produced by AIA software at 10:12:44 ET on 02/08/2019 under Order No.1632503783 which expires on 11/27/2019, and is not for resale.
User Notes: (1110459468)

§ 3.2.2 Because the Contract Documents are complementary, the Contractor shall, before starting each portion of the Work, carefully study and compare the various Contract Documents relative to that portion of the Work, as well as the information furnished by the Owner pursuant to Section 2.3.4, shall take field measurements of any existing conditions related to that portion of the Work, and shall observe any conditions at the site affecting it. These obligations are for the purpose of facilitating coordination and construction by the Contractor and are not for the purpose of discovering errors, omissions, or inconsistencies in the Contract Documents; however, the Contractor shall promptly report to the Architect any errors, inconsistencies or omissions discovered by or made known to the Contractor as a request for information in such form as the Architect may require. It is recognized that the Contractor's review is made in the Contractor's capacity as a contractor and not as a licensed design professional, unless otherwise specifically provided in the Contract Documents.

§ 3.2.3 The Contractor is not required to ascertain that the Contract Documents are in accordance with applicable laws, statutes, ordinances, codes, rules and regulations, or lawful orders of public authorities, but the Contractor shall promptly report to the Architect any nonconformity discovered by or made known to the Contractor as a request for information in such form as the Architect may require.

§ 3.2.4 If the Contractor believes that additional cost or time is involved because of clarifications or instructions the Architect issues in response to the Contractor's notices or requests for information pursuant to Sections 3.2.2 or 3.2.3, the Contractor shall submit Claims as provided in Article 15. If the Contractor fails to perform the obligations of Sections 3.2.2 or 3.2.3, the Contractor shall pay such costs and damages to the Owner, subject to Section 15.1.7, as would have been avoided if the Contractor had performed such obligations. If the Contractor performs those obligations, the Contractor shall not be liable to the Owner or Architect for damages resulting from errors, inconsistencies or omissions in the Contract Documents, for differences between field measurements or conditions and the Contract Documents, or for nonconformities of the Contract Documents to applicable laws, statutes, ordinances, codes, rules and regulations, and lawful orders of public authorities.

§ 3.3 Supervision and Construction Procedures

§ 3.3.1 The Contractor shall supervise and direct the Work, using the Contractor's best skill and attention. The Contractor shall be solely responsible for, and have control over, construction means, methods, techniques, sequences, and procedures, and for coordinating all portions of the Work under the Contract. If the Contract Documents give specific instructions concerning construction means, methods, techniques, sequences, or procedures, the Contractor shall evaluate the jobsite safety thereof and shall be solely responsible for the jobsite safety of such means, methods, techniques, sequences, or procedures. If the Contractor determines that such means, methods, techniques, sequences or procedures may not be safe, the Contractor shall give timely notice to the Owner and Architect, and shall propose alternative means, methods, techniques, sequences, or procedures. The Architect shall evaluate the proposed alternative solely for conformance with the design intent for the completed construction. Unless the Architect objects to the Contractor's proposed alternative, the Contractor shall perform the Work using its alternative means, methods, techniques, sequences, or procedures.

§ 3.3.2 The Contractor shall be responsible to the Owner for acts and omissions of the Contractor's employees, Subcontractors and their agents and employees, and other persons or entities performing portions of the Work for, or on behalf of, the Contractor or any of its Subcontractors.

§ 3.3.3 The Contractor shall be responsible for inspection of portions of Work already performed to determine that such portions are in proper condition to receive subsequent Work.

§ 3.4 Labor and Materials

§ 3.4.1 Unless otherwise provided in the Contract Documents, the Contractor shall provide and pay for labor, materials, equipment, tools, construction equipment and machinery, water, heat, utilities, transportation, and other facilities and services necessary for proper execution and completion of the Work, whether temporary or permanent and whether or not incorporated or to be incorporated in the Work.

§ 3.4.2 Except in the case of minor changes in the Work approved by the Architect in accordance with Section 3.12.8 or ordered by the Architect in accordance with Section 7.4, the Contractor may make substitutions only with the consent of the Owner, after evaluation by the Architect and in accordance with a Change Order or Construction Change Directive.

AIA Document A201™ – 2017. Copyright © 1911, 1915, 1918, 1925, 1937, 1951, 1958, 1961, 1963, 1966, 1970, 1976, 1987, 1997, 2007 and 2017 by The American Institute of Architects**. All rights reserved.** **WARNING: This AIA® Document is protected by U.S. Copyright Law and International Treaties. Unauthorized reproduction or distribution of this AIA® Document, or any portion of it, may result in severe civil and criminal penalties, and will be prosecuted to the maximum extent possible under the law.** This document was produced by AIA software at 10:12:44 ET on 02/08/2019 under Order No.1632503783 which expires on 11/27/2019, and is not for resale.
User Notes: (1110459468)

§ 3.4.3 The Contractor shall enforce strict discipline and good order among the Contractor's employees and other persons carrying out the Work. The Contractor shall not permit employment of unfit persons or persons not properly skilled in tasks assigned to them.

§ 3.5 Warranty

§ 3.5.1 The Contractor warrants to the Owner and Architect that materials and equipment furnished under the Contract will be of good quality and new unless the Contract Documents require or permit otherwise. The Contractor further warrants that the Work will conform to the requirements of the Contract Documents and will be free from defects, except for those inherent in the quality of the Work the Contract Documents require or permit. Work, materials, or equipment not conforming to these requirements may be considered defective. The Contractor's warranty excludes remedy for damage or defect caused by abuse, alterations to the Work not executed by the Contractor, improper or insufficient maintenance, improper operation, or normal wear and tear and normal usage. If required by the Architect, the Contractor shall furnish satisfactory evidence as to the kind and quality of materials and equipment.

§ 3.5.2 All material, equipment, or other special warranties required by the Contract Documents shall be issued in the name of the Owner, or shall be transferable to the Owner, and shall commence in accordance with Section 9.8.4.

§ 3.6 Taxes

The Contractor shall pay sales, consumer, use and similar taxes for the Work provided by the Contractor that are legally enacted when bids are received or negotiations concluded, whether or not yet effective or merely scheduled to go into effect.

§ 3.7 Permits, Fees, Notices and Compliance with Laws

§ 3.7.1 Unless otherwise provided in the Contract Documents, the Contractor shall secure and pay for the building permit as well as for other permits, fees, licenses, and inspections by government agencies necessary for proper execution and completion of the Work that are customarily secured after execution of the Contract and legally required at the time bids are received or negotiations concluded.

§ 3.7.2 The Contractor shall comply with and give notices required by applicable laws, statutes, ordinances, codes, rules and regulations, and lawful orders of public authorities applicable to performance of the Work.

§ 3.7.3 If the Contractor performs Work knowing it to be contrary to applicable laws, statutes, ordinances, codes, rules and regulations, or lawful orders of public authorities, the Contractor shall assume appropriate responsibility for such Work and shall bear the costs attributable to correction.

§ 3.7.4 Concealed or Unknown Conditions

If the Contractor encounters conditions at the site that are (1) subsurface or otherwise concealed physical conditions that differ materially from those indicated in the Contract Documents or (2) unknown physical conditions of an unusual nature that differ materially from those ordinarily found to exist and generally recognized as inherent in construction activities of the character provided for in the Contract Documents, the Contractor shall promptly provide notice to the Owner and the Architect before conditions are disturbed and in no event later than 14 days after first observance of the conditions. The Architect will promptly investigate such conditions and, if the Architect determines that they differ materially and cause an increase or decrease in the Contractor's cost of, or time required for, performance of any part of the Work, will recommend that an equitable adjustment be made in the Contract Sum or Contract Time, or both. If the Architect determines that the conditions at the site are not materially different from those indicated in the Contract Documents and that no change in the terms of the Contract is justified, the Architect shall promptly notify the Owner and Contractor, stating the reasons. If either party disputes the Architect's determination or recommendation, that party may submit a Claim as provided in Article 15.

§ 3.7.5 If, in the course of the Work, the Contractor encounters human remains or recognizes the existence of burial markers, archaeological sites or wetlands not indicated in the Contract Documents, the Contractor shall immediately suspend any operations that would affect them and shall notify the Owner and Architect. Upon receipt of such notice, the Owner shall promptly take any action necessary to obtain governmental authorization required to resume the operations. The Contractor shall continue to suspend such operations until otherwise instructed by the Owner but shall continue with all other operations that do not affect those remains or features. Requests for adjustments in the Contract Sum and Contract Time arising from the existence of such remains or features may be made as provided in Article 15.

AIA Document A201™ – 2017. Copyright © 1911, 1915, 1918, 1925, 1937, 1951, 1958, 1961, 1963, 1966, 1970, 1976, 1987, 1997, 2007 and 2017 by The American Institute of Architects**. All rights reserved.** **WARNING: This AIA® Document is protected by U.S. Copyright Law and International Treaties. Unauthorized reproduction or distribution of this AIA® Document, or any portion of it, may result in severe civil and criminal penalties, and will be prosecuted to the maximum extent possible under the law.** This document was produced by AIA software at 10:12:44 ET on 02/08/2019 under Order No.1632503783 which expires on 11/27/2019, and is not for resale.
User Notes: (1110459468)

§ 3.8 Allowances

§ 3.8.1 The Contractor shall include in the Contract Sum all allowances stated in the Contract Documents. Items covered by allowances shall be supplied for such amounts and by such persons or entities as the Owner may direct, but the Contractor shall not be required to employ persons or entities to whom the Contractor has reasonable objection.

§ 3.8.2 Unless otherwise provided in the Contract Documents,

- **.1** allowances shall cover the cost to the Contractor of materials and equipment delivered at the site and all required taxes, less applicable trade discounts;
- **.2** Contractor's costs for unloading and handling at the site, labor, installation costs, overhead, profit, and other expenses contemplated for stated allowance amounts shall be included in the Contract Sum but not in the allowances; and
- **.3** whenever costs are more than or less than allowances, the Contract Sum shall be adjusted accordingly by Change Order. The amount of the Change Order shall reflect (1) the difference between actual costs and the allowances under Section 3.8.2.1 and (2) changes in Contractor's costs under Section 3.8.2.2.

§ 3.8.3 Materials and equipment under an allowance shall be selected by the Owner with reasonable promptness.

§ 3.9 Superintendent

§ 3.9.1 The Contractor shall employ a competent superintendent and necessary assistants who shall be in attendance at the Project site during performance of the Work. The superintendent shall represent the Contractor, and communications given to the superintendent shall be as binding as if given to the Contractor.

§ 3.9.2 The Contractor, as soon as practicable after award of the Contract, shall notify the Owner and Architect of the name and qualifications of a proposed superintendent. Within 14 days of receipt of the information, the Architect may notify the Contractor, stating whether the Owner or the Architect (1) has reasonable objection to the proposed superintendent or (2) requires additional time for review. Failure of the Architect to provide notice within the 14-day period shall constitute notice of no reasonable objection.

§ 3.9.3 The Contractor shall not employ a proposed superintendent to whom the Owner or Architect has made reasonable and timely objection. The Contractor shall not change the superintendent without the Owner's consent, which shall not unreasonably be withheld or delayed.

§ 3.10 Contractor's Construction and Submittal Schedules

§ 3.10.1 The Contractor, promptly after being awarded the Contract, shall submit for the Owner's and Architect's information a Contractor's construction schedule for the Work. The schedule shall contain detail appropriate for the Project, including (1) the date of commencement of the Work, interim schedule milestone dates, and the date of Substantial Completion; (2) an apportionment of the Work by construction activity; and (3) the time required for completion of each portion of the Work. The schedule shall provide for the orderly progression of the Work to completion and shall not exceed time limits current under the Contract Documents. The schedule shall be revised at appropriate intervals as required by the conditions of the Work and Project.

§ 3.10.2 The Contractor, promptly after being awarded the Contract and thereafter as necessary to maintain a current submittal schedule, shall submit a submittal schedule for the Architect's approval. The Architect's approval shall not be unreasonably delayed or withheld. The submittal schedule shall (1) be coordinated with the Contractor's construction schedule, and (2) allow the Architect reasonable time to review submittals. If the Contractor fails to submit a submittal schedule, or fails to provide submittals in accordance with the approved submittal schedule, the Contractor shall not be entitled to any increase in Contract Sum or extension of Contract Time based on the time required for review of submittals.

§ 3.10.3 The Contractor shall perform the Work in general accordance with the most recent schedules submitted to the Owner and Architect.

§ 3.11 Documents and Samples at the Site

The Contractor shall make available, at the Project site, the Contract Documents, including Change Orders, Construction Change Directives, and other Modifications, in good order and marked currently to indicate field changes and selections made during construction, and the approved Shop Drawings, Product Data, Samples, and similar required submittals. These shall be in electronic form or paper copy, available to the Architect and Owner, and

AIA Document A201™ – 2017. Copyright © 1911, 1915, 1918, 1925, 1937, 1951, 1958, 1961, 1963, 1966, 1970, 1976, 1987, 1997, 2007 and 2017 by The American Institute of Architects**. All rights reserved.** **WARNING: This AIA® Document is protected by U.S. Copyright Law and International Treaties. Unauthorized reproduction or distribution of this AIA® Document, or any portion of it, may result in severe civil and criminal penalties, and will be prosecuted to the maximum extent possible under the law.** This document was produced by AIA software at 10:12:44 ET on 02/08/2019 under Order No.1632503783 which expires on 11/27/2019, and is not for resale.
User Notes: (1110459468)

delivered to the Architect for submittal to the Owner upon completion of the Work as a record of the Work as constructed.

§ 3.12 Shop Drawings, Product Data and Samples

§ 3.12.1 Shop Drawings are drawings, diagrams, schedules, and other data specially prepared for the Work by the Contractor or a Subcontractor, Sub-subcontractor, manufacturer, supplier, or distributor to illustrate some portion of the Work.

§ 3.12.2 Product Data are illustrations, standard schedules, performance charts, instructions, brochures, diagrams, and other information furnished by the Contractor to illustrate materials or equipment for some portion of the Work.

§ 3.12.3 Samples are physical examples that illustrate materials, equipment, or workmanship, and establish standards by which the Work will be judged.

§ 3.12.4 Shop Drawings, Product Data, Samples, and similar submittals are not Contract Documents. Their purpose is to demonstrate how the Contractor proposes to conform to the information given and the design concept expressed in the Contract Documents for those portions of the Work for which the Contract Documents require submittals. Review by the Architect is subject to the limitations of Section 4.2.7. Informational submittals upon which the Architect is not expected to take responsive action may be so identified in the Contract Documents. Submittals that are not required by the Contract Documents may be returned by the Architect without action.

§ 3.12.5 The Contractor shall review for compliance with the Contract Documents, approve, and submit to the Architect, Shop Drawings, Product Data, Samples, and similar submittals required by the Contract Documents, in accordance with the submittal schedule approved by the Architect or, in the absence of an approved submittal schedule, with reasonable promptness and in such sequence as to cause no delay in the Work or in the activities of the Owner or of Separate Contractors.

§ 3.12.6 By submitting Shop Drawings, Product Data, Samples, and similar submittals, the Contractor represents to the Owner and Architect that the Contractor has (1) reviewed and approved them, (2) determined and verified materials, field measurements and field construction criteria related thereto, or will do so, and (3) checked and coordinated the information contained within such submittals with the requirements of the Work and of the Contract Documents.

§ 3.12.7 The Contractor shall perform no portion of the Work for which the Contract Documents require submittal and review of Shop Drawings, Product Data, Samples, or similar submittals, until the respective submittal has been approved by the Architect.

§ 3.12.8 The Work shall be in accordance with approved submittals except that the Contractor shall not be relieved of responsibility for deviations from the requirements of the Contract Documents by the Architect's approval of Shop Drawings, Product Data, Samples, or similar submittals, unless the Contractor has specifically notified the Architect of such deviation at the time of submittal and (1) the Architect has given written approval to the specific deviation as a minor change in the Work, or (2) a Change Order or Construction Change Directive has been issued authorizing the deviation. The Contractor shall not be relieved of responsibility for errors or omissions in Shop Drawings, Product Data, Samples, or similar submittals, by the Architect's approval thereof.

§ 3.12.9 The Contractor shall direct specific attention, in writing or on resubmitted Shop Drawings, Product Data, Samples, or similar submittals, to revisions other than those requested by the Architect on previous submittals. In the absence of such notice, the Architect's approval of a resubmission shall not apply to such revisions.

§ 3.12.10 The Contractor shall not be required to provide professional services that constitute the practice of architecture or engineering unless such services are specifically required by the Contract Documents for a portion of the Work or unless the Contractor needs to provide such services in order to carry out the Contractor's responsibilities for construction means, methods, techniques, sequences, and procedures. The Contractor shall not be required to provide professional services in violation of applicable law.

§ 3.12.10.1 If professional design services or certifications by a design professional related to systems, materials, or equipment are specifically required of the Contractor by the Contract Documents, the Owner and the Architect will specify all performance and design criteria that such services must satisfy. The Contractor shall be entitled to rely

AIA Document A201™ – 2017. Copyright © 1911, 1915, 1918, 1925, 1937, 1951, 1958, 1961, 1963, 1966, 1970, 1976, 1987, 1997, 2007 and 2017 by The American Institute of Architects**. All rights reserved.** **WARNING: This AIA® Document is protected by U.S. Copyright Law and International Treaties. Unauthorized reproduction or distribution of this AIA® Document, or any portion of it, may result in severe civil and criminal penalties, and will be prosecuted to the maximum extent possible under the law.** This document was produced by AIA software at 10:12:44 ET on 02/08/2019 under Order No.1632503783 which expires on 11/27/2019, and is not for resale.
User Notes: (1110459468)

upon the adequacy and accuracy of the performance and design criteria provided in the Contract Documents. The Contractor shall cause such services or certifications to be provided by an appropriately licensed design professional, whose signature and seal shall appear on all drawings, calculations, specifications, certifications, Shop Drawings, and other submittals prepared by such professional. Shop Drawings, and other submittals related to the Work, designed or certified by such professional, if prepared by others, shall bear such professional's written approval when submitted to the Architect. The Owner and the Architect shall be entitled to rely upon the adequacy and accuracy of the services, certifications, and approvals performed or provided by such design professionals, provided the Owner and Architect have specified to the Contractor the performance and design criteria that such services must satisfy. Pursuant to this Section 3.12.10, the Architect will review and approve or take other appropriate action on submittals only for the limited purpose of checking for conformance with information given and the design concept expressed in the Contract Documents.

§ 3.12.10.2 If the Contract Documents require the Contractor's design professional to certify that the Work has been performed in accordance with the design criteria, the Contractor shall furnish such certifications to the Architect at the time and in the form specified by the Architect.

§ 3.13 Use of Site

The Contractor shall confine operations at the site to areas permitted by applicable laws, statutes, ordinances, codes, rules and regulations, lawful orders of public authorities, and the Contract Documents and shall not unreasonably encumber the site with materials or equipment.

§ 3.14 Cutting and Patching

§ 3.14.1 The Contractor shall be responsible for cutting, fitting, or patching required to complete the Work or to make its parts fit together properly. All areas requiring cutting, fitting, or patching shall be restored to the condition existing prior to the cutting, fitting, or patching, unless otherwise required by the Contract Documents.

§ 3.14.2 The Contractor shall not damage or endanger a portion of the Work or fully or partially completed construction of the Owner or Separate Contractors by cutting, patching, or otherwise altering such construction, or by excavation. The Contractor shall not cut or otherwise alter construction by the Owner or a Separate Contractor except with written consent of the Owner and of the Separate Contractor. Consent shall not be unreasonably withheld. The Contractor shall not unreasonably withhold, from the Owner or a Separate Contractor, its consent to cutting or otherwise altering the Work.

§ 3.15 Cleaning Up

§ 3.15.1 The Contractor shall keep the premises and surrounding area free from accumulation of waste materials and rubbish caused by operations under the Contract. At completion of the Work, the Contractor shall remove waste materials, rubbish, the Contractor's tools, construction equipment, machinery, and surplus materials from and about the Project.

§ 3.15.2 If the Contractor fails to clean up as provided in the Contract Documents, the Owner may do so and the Owner shall be entitled to reimbursement from the Contractor.

§ 3.16 Access to Work

The Contractor shall provide the Owner and Architect with access to the Work in preparation and progress wherever located.

§ 3.17 Royalties, Patents and Copyrights

The Contractor shall pay all royalties and license fees. The Contractor shall defend suits or claims for infringement of copyrights and patent rights and shall hold the Owner and Architect harmless from loss on account thereof, but shall not be responsible for defense or loss when a particular design, process, or product of a particular manufacturer or manufacturers is required by the Contract Documents, or where the copyright violations are contained in Drawings, Specifications, or other documents prepared by the Owner or Architect. However, if an infringement of a copyright or patent is discovered by, or made known to, the Contractor, the Contractor shall be responsible for the loss unless the information is promptly furnished to the Architect.

AIA Document A201™ – 2017. Copyright © 1911, 1915, 1918, 1925, 1937, 1951, 1958, 1961, 1963, 1966, 1970, 1976, 1987, 1997, 2007 and 2017 by The American Institute of Architects**. All rights reserved.** **WARNING: This AIA® Document is protected by U.S. Copyright Law and International Treaties. Unauthorized reproduction or distribution of this AIA® Document, or any portion of it, may result in severe civil and criminal penalties, and will be prosecuted to the maximum extent possible under the law.** This document was produced by AIA software at 10:12:44 ET on 02/08/2019 under Order No.1632503783 which expires on 11/27/2019, and is not for resale.
User Notes: (1110459468)

§ 3.18 Indemnification

§ 3.18.1 To the fullest extent permitted by law, the Contractor shall indemnify and hold harmless the Owner, Architect, Architect's consultants, and agents and employees of any of them from and against claims, damages, losses, and expenses, including but not limited to attorneys' fees, arising out of or resulting from performance of the Work, provided that such claim, damage, loss, or expense is attributable to bodily injury, sickness, disease or death, or to injury to or destruction of tangible property (other than the Work itself), but only to the extent caused by the negligent acts or omissions of the Contractor, a Subcontractor, anyone directly or indirectly employed by them, or anyone for whose acts they may be liable, regardless of whether or not such claim, damage, loss, or expense is caused in part by a party indemnified hereunder. Such obligation shall not be construed to negate, abridge, or reduce other rights or obligations of indemnity that would otherwise exist as to a party or person described in this Section 3.18.

§ 3.18.2 In claims against any person or entity indemnified under this Section 3.18 by an employee of the Contractor, a Subcontractor, anyone directly or indirectly employed by them, or anyone for whose acts they may be liable, the indemnification obligation under Section 3.18.1 shall not be limited by a limitation on amount or type of damages, compensation, or benefits payable by or for the Contractor or a Subcontractor under workers' compensation acts, disability benefit acts, or other employee benefit acts.

ARTICLE 4 ARCHITECT

§ 4.1 General

§ 4.1.1 The Architect is the person or entity retained by the Owner pursuant to Section 2.3.2 and identified as such in the Agreement.

§ 4.1.2 Duties, responsibilities, and limitations of authority of the Architect as set forth in the Contract Documents shall not be restricted, modified, or extended without written consent of the Owner, Contractor, and Architect. Consent shall not be unreasonably withheld.

§ 4.2 Administration of the Contract

§ 4.2.1 The Architect will provide administration of the Contract as described in the Contract Documents and will be an Owner's representative during construction until the date the Architect issues the final Certificate for Payment. The Architect will have authority to act on behalf of the Owner only to the extent provided in the Contract Documents.

§ 4.2.2 The Architect will visit the site at intervals appropriate to the stage of construction, or as otherwise agreed with the Owner, to become generally familiar with the progress and quality of the portion of the Work completed, and to determine in general if the Work observed is being performed in a manner indicating that the Work, when fully completed, will be in accordance with the Contract Documents. However, the Architect will not be required to make exhaustive or continuous on-site inspections to check the quality or quantity of the Work. The Architect will not have control over, charge of, or responsibility for the construction means, methods, techniques, sequences or procedures, or for the safety precautions and programs in connection with the Work, since these are solely the Contractor's rights and responsibilities under the Contract Documents.

§ 4.2.3 On the basis of the site visits, the Architect will keep the Owner reasonably informed about the progress and quality of the portion of the Work completed, and promptly report to the Owner (1) known deviations from the Contract Documents, (2) known deviations from the most recent construction schedule submitted by the Contractor, and (3) defects and deficiencies observed in the Work. The Architect will not be responsible for the Contractor's failure to perform the Work in accordance with the requirements of the Contract Documents. The Architect will not have control over or charge of, and will not be responsible for acts or omissions of, the Contractor, Subcontractors, or their agents or employees, or any other persons or entities performing portions of the Work.

§ 4.2.4 Communications

The Owner and Contractor shall include the Architect in all communications that relate to or affect the Architect's services or professional responsibilities. The Owner shall promptly notify the Architect of the substance of any direct communications between the Owner and the Contractor otherwise relating to the Project. Communications by and with the Architect's consultants shall be through the Architect. Communications by and with Subcontractors and suppliers shall be through the Contractor. Communications by and with Separate Contractors shall be through the Owner. The Contract Documents may specify other communication protocols.

AIA Document A201™ – 2017. Copyright © 1911, 1915, 1918, 1925, 1937, 1951, 1958, 1961, 1963, 1966, 1970, 1976, 1987, 1997, 2007 and 2017 by The American Institute of Architects**. All rights reserved.** **WARNING: This AIA® Document is protected by U.S. Copyright Law and International Treaties. Unauthorized reproduction or distribution of this AIA® Document, or any portion of it, may result in severe civil and criminal penalties, and will be prosecuted to the maximum extent possible under the law.** This document was produced by AIA software at 10:12:44 ET on 02/08/2019 under Order No.1632503783 which expires on 11/27/2019, and is not for resale.
User Notes: (1110459468)

§ 4.2.5 Based on the Architect's evaluations of the Contractor's Applications for Payment, the Architect will review and certify the amounts due the Contractor and will issue Certificates for Payment in such amounts.

§ 4.2.6 The Architect has authority to reject Work that does not conform to the Contract Documents. Whenever the Architect considers it necessary or advisable, the Architect will have authority to require inspection or testing of the Work in accordance with Sections 13.4.2 and 13.4.3, whether or not the Work is fabricated, installed or completed. However, neither this authority of the Architect nor a decision made in good faith either to exercise or not to exercise such authority shall give rise to a duty or responsibility of the Architect to the Contractor, Subcontractors, suppliers, their agents or employees, or other persons or entities performing portions of the Work.

§ 4.2.7 The Architect will review and approve, or take other appropriate action upon, the Contractor's submittals such as Shop Drawings, Product Data, and Samples, but only for the limited purpose of checking for conformance with information given and the design concept expressed in the Contract Documents. The Architect's action will be taken in accordance with the submittal schedule approved by the Architect or, in the absence of an approved submittal schedule, with reasonable promptness while allowing sufficient time in the Architect's professional judgment to permit adequate review. Review of such submittals is not conducted for the purpose of determining the accuracy and completeness of other details such as dimensions and quantities, or for substantiating instructions for installation or performance of equipment or systems, all of which remain the responsibility of the Contractor as required by the Contract Documents. The Architect's review of the Contractor's submittals shall not relieve the Contractor of the obligations under Sections 3.3, 3.5, and 3.12. The Architect's review shall not constitute approval of safety precautions or of any construction means, methods, techniques, sequences, or procedures. The Architect's approval of a specific item shall not indicate approval of an assembly of which the item is a component.

§ 4.2.8 The Architect will prepare Change Orders and Construction Change Directives, and may order minor changes in the Work as provided in Section 7.4. The Architect will investigate and make determinations and recommendations regarding concealed and unknown conditions as provided in Section 3.7.4.

§ 4.2.9 The Architect will conduct inspections to determine the date or dates of Substantial Completion and the date of final completion; issue Certificates of Substantial Completion pursuant to Section 9.8; receive and forward to the Owner, for the Owner's review and records, written warranties and related documents required by the Contract and assembled by the Contractor pursuant to Section 9.10; and issue a final Certificate for Payment pursuant to Section 9.10.

§ 4.2.10 If the Owner and Architect agree, the Architect will provide one or more Project representatives to assist in carrying out the Architect's responsibilities at the site. The Owner shall notify the Contractor of any change in the duties, responsibilities and limitations of authority of the Project representatives.

§ 4.2.11 The Architect will interpret and decide matters concerning performance under, and requirements of, the Contract Documents on written request of either the Owner or Contractor. The Architect's response to such requests will be made in writing within any time limits agreed upon or otherwise with reasonable promptness.

§ 4.2.12 Interpretations and decisions of the Architect will be consistent with the intent of, and reasonably inferable from, the Contract Documents and will be in writing or in the form of drawings. When making such interpretations and decisions, the Architect will endeavor to secure faithful performance by both Owner and Contractor, will not show partiality to either, and will not be liable for results of interpretations or decisions rendered in good faith.

§ 4.2.13 The Architect's decisions on matters relating to aesthetic effect will be final if consistent with the intent expressed in the Contract Documents.

§ 4.2.14 The Architect will review and respond to requests for information about the Contract Documents. The Architect's response to such requests will be made in writing within any time limits agreed upon or otherwise with reasonable promptness. If appropriate, the Architect will prepare and issue supplemental Drawings and Specifications in response to the requests for information.

AIA Document A201™ – 2017. Copyright © 1911, 1915, 1918, 1925, 1937, 1951, 1958, 1961, 1963, 1966, 1970, 1976, 1987, 1997, 2007 and 2017 by The American Institute of Architects**. All rights reserved.** **WARNING: This AIA® Document is protected by U.S. Copyright Law and International Treaties. Unauthorized reproduction or distribution of this AIA® Document, or any portion of it, may result in severe civil and criminal penalties, and will be prosecuted to the maximum extent possible under the law.** This document was produced by AIA software at 10:12:44 ET on 02/08/2019 under Order No.1632503783 which expires on 11/27/2019, and is not for resale.
User Notes: (1110459468)

ARTICLE 5 SUBCONTRACTORS

§ 5.1 Definitions

§ 5.1.1 A Subcontractor is a person or entity who has a direct contract with the Contractor to perform a portion of the Work at the site. The term "Subcontractor" is referred to throughout the Contract Documents as if singular in number and means a Subcontractor or an authorized representative of the Subcontractor. The term "Subcontractor" does not include a Separate Contractor or the subcontractors of a Separate Contractor.

§ 5.1.2 A Sub-subcontractor is a person or entity who has a direct or indirect contract with a Subcontractor to perform a portion of the Work at the site. The term "Sub-subcontractor" is referred to throughout the Contract Documents as if singular in number and means a Sub-subcontractor or an authorized representative of the Sub-subcontractor.

§ 5.2 Award of Subcontracts and Other Contracts for Portions of the Work

§ 5.2.1 Unless otherwise stated in the Contract Documents, the Contractor, as soon as practicable after award of the Contract, shall notify the Owner and Architect of the persons or entities proposed for each principal portion of the Work, including those who are to furnish materials or equipment fabricated to a special design. Within 14 days of receipt of the information, the Architect may notify the Contractor whether the Owner or the Architect (1) has reasonable objection to any such proposed person or entity or (2) requires additional time for review. Failure of the Architect to provide notice within the 14-day period shall constitute notice of no reasonable objection.

§ 5.2.2 The Contractor shall not contract with a proposed person or entity to whom the Owner or Architect has made reasonable and timely objection. The Contractor shall not be required to contract with anyone to whom the Contractor has made reasonable objection.

§ 5.2.3 If the Owner or Architect has reasonable objection to a person or entity proposed by the Contractor, the Contractor shall propose another to whom the Owner or Architect has no reasonable objection. If the proposed but rejected Subcontractor was reasonably capable of performing the Work, the Contract Sum and Contract Time shall be increased or decreased by the difference, if any, occasioned by such change, and an appropriate Change Order shall be issued before commencement of the substitute Subcontractor's Work. However, no increase in the Contract Sum or Contract Time shall be allowed for such change unless the Contractor has acted promptly and responsively in submitting names as required.

§ 5.2.4 The Contractor shall not substitute a Subcontractor, person, or entity for one previously selected if the Owner or Architect makes reasonable objection to such substitution.

§ 5.3 Subcontractual Relations

By appropriate written agreement, the Contractor shall require each Subcontractor, to the extent of the Work to be performed by the Subcontractor, to be bound to the Contractor by terms of the Contract Documents, and to assume toward the Contractor all the obligations and responsibilities, including the responsibility for safety of the Subcontractor's Work that the Contractor, by these Contract Documents, assumes toward the Owner and Architect. Each subcontract agreement shall preserve and protect the rights of the Owner and Architect under the Contract Documents with respect to the Work to be performed by the Subcontractor so that subcontracting thereof will not prejudice such rights, and shall allow to the Subcontractor, unless specifically provided otherwise in the subcontract agreement, the benefit of all rights, remedies, and redress against the Contractor that the Contractor, by the Contract Documents, has against the Owner. Where appropriate, the Contractor shall require each Subcontractor to enter into similar agreements with Sub-subcontractors. The Contractor shall make available to each proposed Subcontractor, prior to the execution of the subcontract agreement, copies of the Contract Documents to which the Subcontractor will be bound, and, upon written request of the Subcontractor, identify to the Subcontractor terms and conditions of the proposed subcontract agreement that may be at variance with the Contract Documents. Subcontractors will similarly make copies of applicable portions of such documents available to their respective proposed Sub-subcontractors.

§ 5.4 Contingent Assignment of Subcontracts

§ 5.4.1 Each subcontract agreement for a portion of the Work is assigned by the Contractor to the Owner, provided that

- **.1** assignment is effective only after termination of the Contract by the Owner for cause pursuant to Section 14.2 and only for those subcontract agreements that the Owner accepts by notifying the Subcontractor and Contractor; and
- **.2** assignment is subject to the prior rights of the surety, if any, obligated under bond relating to the Contract.

AIA Document A201™ – 2017. Copyright © 1911, 1915, 1918, 1925, 1937, 1951, 1958, 1961, 1963, 1966, 1970, 1976, 1987, 1997, 2007 and 2017 by The American Institute of Architects**. All rights reserved.** **WARNING: This AIA® Document is protected by U.S. Copyright Law and International Treaties. Unauthorized reproduction or distribution of this AIA® Document, or any portion of it, may result in severe civil and criminal penalties, and will be prosecuted to the maximum extent possible under the law.** This document was produced by AIA software at 10:12:44 ET on 02/08/2019 under Order No.1632503783 which expires on 11/27/2019, and is not for resale.
User Notes: (1110459468)

When the Owner accepts the assignment of a subcontract agreement, the Owner assumes the Contractor's rights and obligations under the subcontract.

§ 5.4.2 Upon such assignment, if the Work has been suspended for more than 30 days, the Subcontractor's compensation shall be equitably adjusted for increases in cost resulting from the suspension.

§ 5.4.3 Upon assignment to the Owner under this Section 5.4, the Owner may further assign the subcontract to a successor contractor or other entity. If the Owner assigns the subcontract to a successor contractor or other entity, the Owner shall nevertheless remain legally responsible for all of the successor contractor's obligations under the subcontract.

ARTICLE 6 CONSTRUCTION BY OWNER OR BY SEPARATE CONTRACTORS

§ 6.1 Owner's Right to Perform Construction and to Award Separate Contracts

§ 6.1.1 The term "Separate Contractor(s)" shall mean other contractors retained by the Owner under separate agreements. The Owner reserves the right to perform construction or operations related to the Project with the Owner's own forces, and with Separate Contractors retained under Conditions of the Contract substantially similar to those of this Contract, including those provisions of the Conditions of the Contract related to insurance and waiver of subrogation.

§ 6.1.2 When separate contracts are awarded for different portions of the Project or other construction or operations on the site, the term "Contractor" in the Contract Documents in each case shall mean the Contractor who executes each separate Owner-Contractor Agreement.

§ 6.1.3 The Owner shall provide for coordination of the activities of the Owner's own forces and of each Separate Contractor with the Work of the Contractor, who shall cooperate with them. The Contractor shall participate with any Separate Contractors and the Owner in reviewing their construction schedules. The Contractor shall make any revisions to its construction schedule deemed necessary after a joint review and mutual agreement. The construction schedules shall then constitute the schedules to be used by the Contractor, Separate Contractors, and the Owner until subsequently revised.

§ 6.1.4 Unless otherwise provided in the Contract Documents, when the Owner performs construction or operations related to the Project with the Owner's own forces or with Separate Contractors, the Owner or its Separate Contractors shall have the same obligations and rights that the Contractor has under the Conditions of the Contract, including, without excluding others, those stated in Article 3, this Article 6, and Articles 10, 11, and 12.

§ 6.2 Mutual Responsibility

§ 6.2.1 The Contractor shall afford the Owner and Separate Contractors reasonable opportunity for introduction and storage of their materials and equipment and performance of their activities, and shall connect and coordinate the Contractor's construction and operations with theirs as required by the Contract Documents.

§ 6.2.2 If part of the Contractor's Work depends for proper execution or results upon construction or operations by the Owner or a Separate Contractor, the Contractor shall, prior to proceeding with that portion of the Work, promptly notify the Architect of apparent discrepancies or defects in the construction or operations by the Owner or Separate Contractor that would render it unsuitable for proper execution and results of the Contractor's Work. Failure of the Contractor to notify the Architect of apparent discrepancies or defects prior to proceeding with the Work shall constitute an acknowledgment that the Owner's or Separate Contractor's completed or partially completed construction is fit and proper to receive the Contractor's Work. The Contractor shall not be responsible for discrepancies or defects in the construction or operations by the Owner or Separate Contractor that are not apparent.

§ 6.2.3 The Contractor shall reimburse the Owner for costs the Owner incurs that are payable to a Separate Contractor because of the Contractor's delays, improperly timed activities or defective construction. The Owner shall be responsible to the Contractor for costs the Contractor incurs because of a Separate Contractor's delays, improperly timed activities, damage to the Work or defective construction.

§ 6.2.4 The Contractor shall promptly remedy damage that the Contractor wrongfully causes to completed or partially completed construction or to property of the Owner or Separate Contractor as provided in Section 10.2.5.

AIA Document A201™ – 2017. Copyright © 1911, 1915, 1918, 1925, 1937, 1951, 1958, 1961, 1963, 1966, 1970, 1976, 1987, 1997, 2007 and 2017 by The American Institute of Architects**. All rights reserved.** **WARNING: This AIA® Document is protected by U.S. Copyright Law and International Treaties. Unauthorized reproduction or distribution of this AIA® Document, or any portion of it, may result in severe civil and criminal penalties, and will be prosecuted to the maximum extent possible under the law.** This document was produced by AIA software at 10:12:44 ET on 02/08/2019 under Order No.1632503783 which expires on 11/27/2019, and is not for resale.
User Notes: (1110459468)

§ 6.2.5 The Owner and each Separate Contractor shall have the same responsibilities for cutting and patching as are described for the Contractor in Section 3.14.

§ 6.3 Owner's Right to Clean Up

If a dispute arises among the Contractor, Separate Contractors, and the Owner as to the responsibility under their respective contracts for maintaining the premises and surrounding area free from waste materials and rubbish, the Owner may clean up and the Architect will allocate the cost among those responsible.

ARTICLE 7 CHANGES IN THE WORK

§ 7.1 General

§ 7.1.1 Changes in the Work may be accomplished after execution of the Contract, and without invalidating the Contract, by Change Order, Construction Change Directive or order for a minor change in the Work, subject to the limitations stated in this Article 7 and elsewhere in the Contract Documents.

§ 7.1.2 A Change Order shall be based upon agreement among the Owner, Contractor, and Architect. A Construction Change Directive requires agreement by the Owner and Architect and may or may not be agreed to by the Contractor. An order for a minor change in the Work may be issued by the Architect alone.

§ 7.1.3 Changes in the Work shall be performed under applicable provisions of the Contract Documents. The Contractor shall proceed promptly with changes in the Work, unless otherwise provided in the Change Order, Construction Change Directive, or order for a minor change in the Work.

§ 7.2 Change Orders

§ 7.2.1 A Change Order is a written instrument prepared by the Architect and signed by the Owner, Contractor, and Architect stating their agreement upon all of the following:

.1 The change in the Work;
.2 The amount of the adjustment, if any, in the Contract Sum; and
.3 The extent of the adjustment, if any, in the Contract Time.

§ 7.3 Construction Change Directives

§ 7.3.1 A Construction Change Directive is a written order prepared by the Architect and signed by the Owner and Architect, directing a change in the Work prior to agreement on adjustment, if any, in the Contract Sum or Contract Time, or both. The Owner may by Construction Change Directive, without invalidating the Contract, order changes in the Work within the general scope of the Contract consisting of additions, deletions, or other revisions, the Contract Sum and Contract Time being adjusted accordingly.

§ 7.3.2 A Construction Change Directive shall be used in the absence of total agreement on the terms of a Change Order.

§ 7.3.3 If the Construction Change Directive provides for an adjustment to the Contract Sum, the adjustment shall be based on one of the following methods:

.1 Mutual acceptance of a lump sum properly itemized and supported by sufficient substantiating data to permit evaluation;
.2 Unit prices stated in the Contract Documents or subsequently agreed upon;
.3 Cost to be determined in a manner agreed upon by the parties and a mutually acceptable fixed or percentage fee; or
.4 As provided in Section 7.3.4.

§ 7.3.4 If the Contractor does not respond promptly or disagrees with the method for adjustment in the Contract Sum, the Architect shall determine the adjustment on the basis of reasonable expenditures and savings of those performing the Work attributable to the change, including, in case of an increase in the Contract Sum, an amount for overhead and profit as set forth in the Agreement, or if no such amount is set forth in the Agreement, a reasonable amount. In such case, and also under Section 7.3.3.3, the Contractor shall keep and present, in such form as the Architect may prescribe, an itemized accounting together with appropriate supporting data. Unless otherwise provided in the Contract Documents, costs for the purposes of this Section 7.3.4 shall be limited to the following:

AIA Document A201™ – 2017. Copyright © 1911, 1915, 1918, 1925, 1937, 1951, 1958, 1961, 1963, 1966, 1970, 1976, 1987, 1997, 2007 and 2017 by The American Institute of Architects**. All rights reserved.** **WARNING: This AIA® Document is protected by U.S. Copyright Law and International Treaties. Unauthorized reproduction or distribution of this AIA® Document, or any portion of it, may result in severe civil and criminal penalties, and will be prosecuted to the maximum extent possible under the law.** This document was produced by AIA software at 10:12:44 ET on 02/08/2019 under Order No.1632503783 which expires on 11/27/2019, and is not for resale.
User Notes: (1110459468)

.1 Costs of labor, including applicable payroll taxes, fringe benefits required by agreement or custom, workers' compensation insurance, and other employee costs approved by the Architect;

.2 Costs of materials, supplies, and equipment, including cost of transportation, whether incorporated or consumed;

.3 Rental costs of machinery and equipment, exclusive of hand tools, whether rented from the Contractor or others;

.4 Costs of premiums for all bonds and insurance, permit fees, and sales, use, or similar taxes, directly related to the change; and

.5 Costs of supervision and field office personnel directly attributable to the change.

§ 7.3.5 If the Contractor disagrees with the adjustment in the Contract Time, the Contractor may make a Claim in accordance with applicable provisions of Article 15.

§ 7.3.6 Upon receipt of a Construction Change Directive, the Contractor shall promptly proceed with the change in the Work involved and advise the Architect of the Contractor's agreement or disagreement with the method, if any, provided in the Construction Change Directive for determining the proposed adjustment in the Contract Sum or Contract Time.

§ 7.3.7 A Construction Change Directive signed by the Contractor indicates the Contractor's agreement therewith, including adjustment in Contract Sum and Contract Time or the method for determining them. Such agreement shall be effective immediately and shall be recorded as a Change Order.

§ 7.3.8 The amount of credit to be allowed by the Contractor to the Owner for a deletion or change that results in a net decrease in the Contract Sum shall be actual net cost as confirmed by the Architect. When both additions and credits covering related Work or substitutions are involved in a change, the allowance for overhead and profit shall be figured on the basis of net increase, if any, with respect to that change.

§ 7.3.9 Pending final determination of the total cost of a Construction Change Directive to the Owner, the Contractor may request payment for Work completed under the Construction Change Directive in Applications for Payment. The Architect will make an interim determination for purposes of monthly certification for payment for those costs and certify for payment the amount that the Architect determines, in the Architect's professional judgment, to be reasonably justified. The Architect's interim determination of cost shall adjust the Contract Sum on the same basis as a Change Order, subject to the right of either party to disagree and assert a Claim in accordance with Article 15.

§ 7.3.10 When the Owner and Contractor agree with a determination made by the Architect concerning the adjustments in the Contract Sum and Contract Time, or otherwise reach agreement upon the adjustments, such agreement shall be effective immediately and the Architect will prepare a Change Order. Change Orders may be issued for all or any part of a Construction Change Directive.

§ 7.4 Minor Changes in the Work

The Architect may order minor changes in the Work that are consistent with the intent of the Contract Documents and do not involve an adjustment in the Contract Sum or an extension of the Contract Time. The Architect's order for minor changes shall be in writing. If the Contractor believes that the proposed minor change in the Work will affect the Contract Sum or Contract Time, the Contractor shall notify the Architect and shall not proceed to implement the change in the Work. If the Contractor performs the Work set forth in the Architect's order for a minor change without prior notice to the Architect that such change will affect the Contract Sum or Contract Time, the Contractor waives any adjustment to the Contract Sum or extension of the Contract Time.

ARTICLE 8 TIME

§ 8.1 Definitions

§ 8.1.1 Unless otherwise provided, Contract Time is the period of time, including authorized adjustments, allotted in the Contract Documents for Substantial Completion of the Work.

§ 8.1.2 The date of commencement of the Work is the date established in the Agreement.

§ 8.1.3 The date of Substantial Completion is the date certified by the Architect in accordance with Section 9.8.

AIA Document A201™ – 2017. Copyright © 1911, 1915, 1918, 1925, 1937, 1951, 1958, 1961, 1963, 1966, 1970, 1976, 1987, 1997, 2007 and 2017 by The American Institute of Architects**. All rights reserved.** **WARNING: This AIA® Document is protected by U.S. Copyright Law and International Treaties. Unauthorized reproduction or distribution of this AIA® Document, or any portion of it, may result in severe civil and criminal penalties, and will be prosecuted to the maximum extent possible under the law.** This document was produced by AIA software at 10:12:44 ET on 02/08/2019 under Order No.1632503783 which expires on 11/27/2019, and is not for resale.
User Notes: (1110459468)

§ 8.1.4 The term "day" as used in the Contract Documents shall mean calendar day unless otherwise specifically defined.

§ 8.2 Progress and Completion

§ 8.2.1 Time limits stated in the Contract Documents are of the essence of the Contract. By executing the Agreement, the Contractor confirms that the Contract Time is a reasonable period for performing the Work.

§ 8.2.2 The Contractor shall not knowingly, except by agreement or instruction of the Owner in writing, commence the Work prior to the effective date of insurance required to be furnished by the Contractor and Owner.

§ 8.2.3 The Contractor shall proceed expeditiously with adequate forces and shall achieve Substantial Completion within the Contract Time.

§ 8.3 Delays and Extensions of Time

§ 8.3.1 If the Contractor is delayed at any time in the commencement or progress of the Work by (1) an act or neglect of the Owner or Architect, of an employee of either, or of a Separate Contractor; (2) by changes ordered in the Work; (3) by labor disputes, fire, unusual delay in deliveries, unavoidable casualties, adverse weather conditions documented in accordance with Section 15.1.6.2, or other causes beyond the Contractor's control; (4) by delay authorized by the Owner pending mediation and binding dispute resolution; or (5) by other causes that the Contractor asserts, and the Architect determines, justify delay, then the Contract Time shall be extended for such reasonable time as the Architect may determine.

§ 8.3.2 Claims relating to time shall be made in accordance with applicable provisions of Article 15.

§ 8.3.3 This Section 8.3 does not preclude recovery of damages for delay by either party under other provisions of the Contract Documents.

ARTICLE 9 PAYMENTS AND COMPLETION

§ 9.1 Contract Sum

§ 9.1.1 The Contract Sum is stated in the Agreement and, including authorized adjustments, is the total amount payable by the Owner to the Contractor for performance of the Work under the Contract Documents.

§ 9.1.2 If unit prices are stated in the Contract Documents or subsequently agreed upon, and if quantities originally contemplated are materially changed so that application of such unit prices to the actual quantities causes substantial inequity to the Owner or Contractor, the applicable unit prices shall be equitably adjusted.

§ 9.2 Schedule of Values

Where the Contract is based on a stipulated sum or Guaranteed Maximum Price, the Contractor shall submit a schedule of values to the Architect before the first Application for Payment, allocating the entire Contract Sum to the various portions of the Work. The schedule of values shall be prepared in the form, and supported by the data to substantiate its accuracy, required by the Architect. This schedule, unless objected to by the Architect, shall be used as a basis for reviewing the Contractor's Applications for Payment. Any changes to the schedule of values shall be submitted to the Architect and supported by such data to substantiate its accuracy as the Architect may require, and unless objected to by the Architect, shall be used as a basis for reviewing the Contractor's subsequent Applications for Payment.

§ 9.3 Applications for Payment

§ 9.3.1 At least ten days before the date established for each progress payment, the Contractor shall submit to the Architect an itemized Application for Payment prepared in accordance with the schedule of values, if required under Section 9.2, for completed portions of the Work. The application shall be notarized, if required, and supported by all data substantiating the Contractor's right to payment that the Owner or Architect require, such as copies of requisitions, and releases and waivers of liens from Subcontractors and suppliers, and shall reflect retainage if provided for in the Contract Documents.

§ 9.3.1.1 As provided in Section 7.3.9, such applications may include requests for payment on account of changes in the Work that have been properly authorized by Construction Change Directives, or by interim determinations of the Architect, but not yet included in Change Orders.

AIA Document A201™ – 2017. Copyright © 1911, 1915, 1918, 1925, 1937, 1951, 1958, 1961, 1963, 1966, 1970, 1976, 1987, 1997, 2007 and 2017 by The American Institute of Architects**. All rights reserved.** **WARNING: This AIA® Document is protected by U.S. Copyright Law and International Treaties. Unauthorized reproduction or distribution of this AIA® Document, or any portion of it, may result in severe civil and criminal penalties, and will be prosecuted to the maximum extent possible under the law.** This document was produced by AIA software at 10:12:44 ET on 02/08/2019 under Order No.1632503783 which expires on 11/27/2019, and is not for resale.
User Notes: (1110459468)

§ 9.3.1.2 Applications for Payment shall not include requests for payment for portions of the Work for which the Contractor does not intend to pay a Subcontractor or supplier, unless such Work has been performed by others whom the Contractor intends to pay.

§ 9.3.2 Unless otherwise provided in the Contract Documents, payments shall be made on account of materials and equipment delivered and suitably stored at the site for subsequent incorporation in the Work. If approved in advance by the Owner, payment may similarly be made for materials and equipment suitably stored off the site at a location agreed upon in writing. Payment for materials and equipment stored on or off the site shall be conditioned upon compliance by the Contractor with procedures satisfactory to the Owner to establish the Owner's title to such materials and equipment or otherwise protect the Owner's interest, and shall include the costs of applicable insurance, storage, and transportation to the site, for such materials and equipment stored off the site.

§ 9.3.3 The Contractor warrants that title to all Work covered by an Application for Payment will pass to the Owner no later than the time of payment. The Contractor further warrants that upon submittal of an Application for Payment all Work for which Certificates for Payment have been previously issued and payments received from the Owner shall, to the best of the Contractor's knowledge, information, and belief, be free and clear of liens, claims, security interests, or encumbrances, in favor of the Contractor, Subcontractors, suppliers, or other persons or entities that provided labor, materials, and equipment relating to the Work.

§ 9.4 Certificates for Payment

§ 9.4.1 The Architect will, within seven days after receipt of the Contractor's Application for Payment, either (1) issue to the Owner a Certificate for Payment in the full amount of the Application for Payment, with a copy to the Contractor; or (2) issue to the Owner a Certificate for Payment for such amount as the Architect determines is properly due, and notify the Contractor and Owner of the Architect's reasons for withholding certification in part as provided in Section 9.5.1; or (3) withhold certification of the entire Application for Payment, and notify the Contractor and Owner of the Architect's reason for withholding certification in whole as provided in Section 9.5.1.

§ 9.4.2 The issuance of a Certificate for Payment will constitute a representation by the Architect to the Owner, based on the Architect's evaluation of the Work and the data in the Application for Payment, that, to the best of the Architect's knowledge, information, and belief, the Work has progressed to the point indicated, the quality of the Work is in accordance with the Contract Documents, and that the Contractor is entitled to payment in the amount certified. The foregoing representations are subject to an evaluation of the Work for conformance with the Contract Documents upon Substantial Completion, to results of subsequent tests and inspections, to correction of minor deviations from the Contract Documents prior to completion, and to specific qualifications expressed by the Architect. However, the issuance of a Certificate for Payment will not be a representation that the Architect has (1) made exhaustive or continuous on-site inspections to check the quality or quantity of the Work; (2) reviewed construction means, methods, techniques, sequences, or procedures; (3) reviewed copies of requisitions received from Subcontractors and suppliers and other data requested by the Owner to substantiate the Contractor's right to payment; or (4) made examination to ascertain how or for what purpose the Contractor has used money previously paid on account of the Contract Sum.

§ 9.5 Decisions to Withhold Certification

§ 9.5.1 The Architect may withhold a Certificate for Payment in whole or in part, to the extent reasonably necessary to protect the Owner, if in the Architect's opinion the representations to the Owner required by Section 9.4.2 cannot be made. If the Architect is unable to certify payment in the amount of the Application, the Architect will notify the Contractor and Owner as provided in Section 9.4.1. If the Contractor and Architect cannot agree on a revised amount, the Architect will promptly issue a Certificate for Payment for the amount for which the Architect is able to make such representations to the Owner. The Architect may also withhold a Certificate for Payment or, because of subsequently discovered evidence, may nullify the whole or a part of a Certificate for Payment previously issued, to such extent as may be necessary in the Architect's opinion to protect the Owner from loss for which the Contractor is responsible, including loss resulting from acts and omissions described in Section 3.3.2, because of

- **.1** defective Work not remedied;
- **.2** third party claims filed or reasonable evidence indicating probable filing of such claims, unless security acceptable to the Owner is provided by the Contractor;
- **.3** failure of the Contractor to make payments properly to Subcontractors or suppliers for labor, materials or equipment;

AIA Document A201™ – 2017. Copyright © 1911, 1915, 1918, 1925, 1937, 1951, 1958, 1961, 1963, 1966, 1970, 1976, 1987, 1997, 2007 and 2017 by The American Institute of Architects**. All rights reserved.** **WARNING: This AIA® Document is protected by U.S. Copyright Law and International Treaties. Unauthorized reproduction or distribution of this AIA® Document, or any portion of it, may result in severe civil and criminal penalties, and will be prosecuted to the maximum extent possible under the law.** This document was produced by AIA software at 10:12:44 ET on 02/08/2019 under Order No.1632503783 which expires on 11/27/2019, and is not for resale.
User Notes: (1110459468)

.4 reasonable evidence that the Work cannot be completed for the unpaid balance of the Contract Sum;
.5 damage to the Owner or a Separate Contractor;
.6 reasonable evidence that the Work will not be completed within the Contract Time, and that the unpaid balance would not be adequate to cover actual or liquidated damages for the anticipated delay; or
.7 repeated failure to carry out the Work in accordance with the Contract Documents.

§ 9.5.2 When either party disputes the Architect's decision regarding a Certificate for Payment under Section 9.5.1, in whole or in part, that party may submit a Claim in accordance with Article 15.

§ 9.5.3 When the reasons for withholding certification are removed, certification will be made for amounts previously withheld.

§ 9.5.4 If the Architect withholds certification for payment under Section 9.5.1.3, the Owner may, at its sole option, issue joint checks to the Contractor and to any Subcontractor or supplier to whom the Contractor failed to make payment for Work properly performed or material or equipment suitably delivered. If the Owner makes payments by joint check, the Owner shall notify the Architect and the Contractor shall reflect such payment on its next Application for Payment.

§ 9.6 Progress Payments

§ 9.6.1 After the Architect has issued a Certificate for Payment, the Owner shall make payment in the manner and within the time provided in the Contract Documents, and shall so notify the Architect.

§ 9.6.2 The Contractor shall pay each Subcontractor, no later than seven days after receipt of payment from the Owner, the amount to which the Subcontractor is entitled, reflecting percentages actually retained from payments to the Contractor on account of the Subcontractor's portion of the Work. The Contractor shall, by appropriate agreement with each Subcontractor, require each Subcontractor to make payments to Sub-subcontractors in a similar manner.

§ 9.6.3 The Architect will, on request, furnish to a Subcontractor, if practicable, information regarding percentages of completion or amounts applied for by the Contractor and action taken thereon by the Architect and Owner on account of portions of the Work done by such Subcontractor.

§ 9.6.4 The Owner has the right to request written evidence from the Contractor that the Contractor has properly paid Subcontractors and suppliers amounts paid by the Owner to the Contractor for subcontracted Work. If the Contractor fails to furnish such evidence within seven days, the Owner shall have the right to contact Subcontractors and suppliers to ascertain whether they have been properly paid. Neither the Owner nor Architect shall have an obligation to pay, or to see to the payment of money to, a Subcontractor or supplier, except as may otherwise be required by law.

§ 9.6.5 The Contractor's payments to suppliers shall be treated in a manner similar to that provided in Sections 9.6.2, 9.6.3 and 9.6.4.

§ 9.6.6 A Certificate for Payment, a progress payment, or partial or entire use or occupancy of the Project by the Owner shall not constitute acceptance of Work not in accordance with the Contract Documents.

§ 9.6.7 Unless the Contractor provides the Owner with a payment bond in the full penal sum of the Contract Sum, payments received by the Contractor for Work properly performed by Subcontractors or provided by suppliers shall be held by the Contractor for those Subcontractors or suppliers who performed Work or furnished materials, or both, under contract with the Contractor for which payment was made by the Owner. Nothing contained herein shall require money to be placed in a separate account and not commingled with money of the Contractor, create any fiduciary liability or tort liability on the part of the Contractor for breach of trust, or entitle any person or entity to an award of punitive damages against the Contractor for breach of the requirements of this provision.

§ 9.6.8 Provided the Owner has fulfilled its payment obligations under the Contract Documents, the Contractor shall defend and indemnify the Owner from all loss, liability, damage or expense, including reasonable attorney's fees and litigation expenses, arising out of any lien claim or other claim for payment by any Subcontractor or supplier of any tier. Upon receipt of notice of a lien claim or other claim for payment, the Owner shall notify the Contractor. If approved by the applicable court, when required, the Contractor may substitute a surety bond for the property against which the lien or other claim for payment has been asserted.

AIA Document A201™ – 2017. Copyright © 1911, 1915, 1918, 1925, 1937, 1951, 1958, 1961, 1963, 1966, 1970, 1976, 1987, 1997, 2007 and 2017 by The American Institute of Architects**. All rights reserved.** **WARNING: This AIA® Document is protected by U.S. Copyright Law and International Treaties. Unauthorized reproduction or distribution of this AIA® Document, or any portion of it, may result in severe civil and criminal penalties, and will be prosecuted to the maximum extent possible under the law.** This document was produced by AIA software at 10:12:44 ET on 02/08/2019 under Order No.1632503783 which expires on 11/27/2019, and is not for resale.
User Notes: (1110459468)

§ 9.7 Failure of Payment

If the Architect does not issue a Certificate for Payment, through no fault of the Contractor, within seven days after receipt of the Contractor's Application for Payment, or if the Owner does not pay the Contractor within seven days after the date established in the Contract Documents, the amount certified by the Architect or awarded by binding dispute resolution, then the Contractor may, upon seven additional days' notice to the Owner and Architect, stop the Work until payment of the amount owing has been received. The Contract Time shall be extended appropriately and the Contract Sum shall be increased by the amount of the Contractor's reasonable costs of shutdown, delay and start-up, plus interest as provided for in the Contract Documents.

§ 9.8 Substantial Completion

§ 9.8.1 Substantial Completion is the stage in the progress of the Work when the Work or designated portion thereof is sufficiently complete in accordance with the Contract Documents so that the Owner can occupy or utilize the Work for its intended use.

§ 9.8.2 When the Contractor considers that the Work, or a portion thereof which the Owner agrees to accept separately, is substantially complete, the Contractor shall prepare and submit to the Architect a comprehensive list of items to be completed or corrected prior to final payment. Failure to include an item on such list does not alter the responsibility of the Contractor to complete all Work in accordance with the Contract Documents.

§ 9.8.3 Upon receipt of the Contractor's list, the Architect will make an inspection to determine whether the Work or designated portion thereof is substantially complete. If the Architect's inspection discloses any item, whether or not included on the Contractor's list, which is not sufficiently complete in accordance with the Contract Documents so that the Owner can occupy or utilize the Work or designated portion thereof for its intended use, the Contractor shall, before issuance of the Certificate of Substantial Completion, complete or correct such item upon notification by the Architect. In such case, the Contractor shall then submit a request for another inspection by the Architect to determine Substantial Completion.

§ 9.8.4 When the Work or designated portion thereof is substantially complete, the Architect will prepare a Certificate of Substantial Completion that shall establish the date of Substantial Completion; establish responsibilities of the Owner and Contractor for security, maintenance, heat, utilities, damage to the Work and insurance; and fix the time within which the Contractor shall finish all items on the list accompanying the Certificate. Warranties required by the Contract Documents shall commence on the date of Substantial Completion of the Work or designated portion thereof unless otherwise provided in the Certificate of Substantial Completion.

§ 9.8.5 The Certificate of Substantial Completion shall be submitted to the Owner and Contractor for their written acceptance of responsibilities assigned to them in the Certificate. Upon such acceptance, and consent of surety if any, the Owner shall make payment of retainage applying to the Work or designated portion thereof. Such payment shall be adjusted for Work that is incomplete or not in accordance with the requirements of the Contract Documents.

§ 9.9 Partial Occupancy or Use

§ 9.9.1 The Owner may occupy or use any completed or partially completed portion of the Work at any stage when such portion is designated by separate agreement with the Contractor, provided such occupancy or use is consented to by the insurer and authorized by public authorities having jurisdiction over the Project. Such partial occupancy or use may commence whether or not the portion is substantially complete, provided the Owner and Contractor have accepted in writing the responsibilities assigned to each of them for payments, retainage, if any, security, maintenance, heat, utilities, damage to the Work and insurance, and have agreed in writing concerning the period for correction of the Work and commencement of warranties required by the Contract Documents. When the Contractor considers a portion substantially complete, the Contractor shall prepare and submit a list to the Architect as provided under Section 9.8.2. Consent of the Contractor to partial occupancy or use shall not be unreasonably withheld. The stage of the progress of the Work shall be determined by written agreement between the Owner and Contractor or, if no agreement is reached, by decision of the Architect.

§ 9.9.2 Immediately prior to such partial occupancy or use, the Owner, Contractor, and Architect shall jointly inspect the area to be occupied or portion of the Work to be used in order to determine and record the condition of the Work.

AIA Document A201™ – 2017. Copyright © 1911, 1915, 1918, 1925, 1937, 1951, 1958, 1961, 1963, 1966, 1970, 1976, 1987, 1997, 2007 and 2017 by The American Institute of Architects**. All rights reserved.** **WARNING: This AIA® Document is protected by U.S. Copyright Law and International Treaties. Unauthorized reproduction or distribution of this AIA® Document, or any portion of it, may result in severe civil and criminal penalties, and will be prosecuted to the maximum extent possible under the law.** This document was produced by AIA software at 10:12:44 ET on 02/08/2019 under Order No.1632503783 which expires on 11/27/2019, and is not for resale.
User Notes: (1110459468)

§ 9.9.3 Unless otherwise agreed upon, partial occupancy or use of a portion or portions of the Work shall not constitute acceptance of Work not complying with the requirements of the Contract Documents.

§ 9.10 Final Completion and Final Payment

§ 9.10.1 Upon receipt of the Contractor's notice that the Work is ready for final inspection and acceptance and upon receipt of a final Application for Payment, the Architect will promptly make such inspection. When the Architect finds the Work acceptable under the Contract Documents and the Contract fully performed, the Architect will promptly issue a final Certificate for Payment stating that to the best of the Architect's knowledge, information and belief, and on the basis of the Architect's on-site visits and inspections, the Work has been completed in accordance with the Contract Documents and that the entire balance found to be due the Contractor and noted in the final Certificate is due and payable. The Architect's final Certificate for Payment will constitute a further representation that conditions listed in Section 9.10.2 as precedent to the Contractor's being entitled to final payment have been fulfilled.

§ 9.10.2 Neither final payment nor any remaining retained percentage shall become due until the Contractor submits to the Architect (1) an affidavit that payrolls, bills for materials and equipment, and other indebtedness connected with the Work for which the Owner or the Owner's property might be responsible or encumbered (less amounts withheld by Owner) have been paid or otherwise satisfied, (2) a certificate evidencing that insurance required by the Contract Documents to remain in force after final payment is currently in effect, (3) a written statement that the Contractor knows of no reason that the insurance will not be renewable to cover the period required by the Contract Documents, (4) consent of surety, if any, to final payment, (5) documentation of any special warranties, such as manufacturers' warranties or specific Subcontractor warranties, and (6) if required by the Owner, other data establishing payment or satisfaction of obligations, such as receipts and releases and waivers of liens, claims, security interests, or encumbrances arising out of the Contract, to the extent and in such form as may be designated by the Owner. If a Subcontractor refuses to furnish a release or waiver required by the Owner, the Contractor may furnish a bond satisfactory to the Owner to indemnify the Owner against such lien, claim, security interest, or encumbrance. If a lien, claim, security interest, or encumbrance remains unsatisfied after payments are made, the Contractor shall refund to the Owner all money that the Owner may be compelled to pay in discharging the lien, claim, security interest, or encumbrance, including all costs and reasonable attorneys' fees.

§ 9.10.3 If, after Substantial Completion of the Work, final completion thereof is materially delayed through no fault of the Contractor or by issuance of Change Orders affecting final completion, and the Architect so confirms, the Owner shall, upon application by the Contractor and certification by the Architect, and without terminating the Contract, make payment of the balance due for that portion of the Work fully completed, corrected, and accepted. If the remaining balance for Work not fully completed or corrected is less than retainage stipulated in the Contract Documents, and if bonds have been furnished, the written consent of the surety to payment of the balance due for that portion of the Work fully completed and accepted shall be submitted by the Contractor to the Architect prior to certification of such payment. Such payment shall be made under terms and conditions governing final payment, except that it shall not constitute a waiver of Claims.

§ 9.10.4 The making of final payment shall constitute a waiver of Claims by the Owner except those arising from

- **.1** liens, Claims, security interests, or encumbrances arising out of the Contract and unsettled;
- **.2** failure of the Work to comply with the requirements of the Contract Documents;
- **.3** terms of special warranties required by the Contract Documents; or
- **.4** audits performed by the Owner, if permitted by the Contract Documents, after final payment.

§ 9.10.5 Acceptance of final payment by the Contractor, a Subcontractor, or a supplier, shall constitute a waiver of claims by that payee except those previously made in writing and identified by that payee as unsettled at the time of final Application for Payment.

ARTICLE 10 PROTECTION OF PERSONS AND PROPERTY

§ 10.1 Safety Precautions and Programs

The Contractor shall be responsible for initiating, maintaining, and supervising all safety precautions and programs in connection with the performance of the Contract.

§ 10.2 Safety of Persons and Property

§ 10.2.1 The Contractor shall take reasonable precautions for safety of, and shall provide reasonable protection to prevent damage, injury, or loss to

AIA Document A201™ – 2017. Copyright © 1911, 1915, 1918, 1925, 1937, 1951, 1958, 1961, 1963, 1966, 1970, 1976, 1987, 1997, 2007 and 2017 by The American Institute of Architects**. All rights reserved.** **WARNING: This AIA® Document is protected by U.S. Copyright Law and International Treaties. Unauthorized reproduction or distribution of this AIA® Document, or any portion of it, may result in severe civil and criminal penalties, and will be prosecuted to the maximum extent possible under the law.** This document was produced by AIA software at 10:12:44 ET on 02/08/2019 under Order No.1632503783 which expires on 11/27/2019, and is not for resale.
User Notes: (1110459468)

.1 employees on the Work and other persons who may be affected thereby;

.2 the Work and materials and equipment to be incorporated therein, whether in storage on or off the site, under care, custody, or control of the Contractor, a Subcontractor, or a Sub-subcontractor; and

.3 other property at the site or adjacent thereto, such as trees, shrubs, lawns, walks, pavements, roadways, structures, and utilities not designated for removal, relocation, or replacement in the course of construction.

§ 10.2.2 The Contractor shall comply with, and give notices required by applicable laws, statutes, ordinances, codes, rules and regulations, and lawful orders of public authorities, bearing on safety of persons or property or their protection from damage, injury, or loss.

§ 10.2.3 The Contractor shall implement, erect, and maintain, as required by existing conditions and performance of the Contract, reasonable safeguards for safety and protection, including posting danger signs and other warnings against hazards; promulgating safety regulations; and notifying the owners and users of adjacent sites and utilities of the safeguards.

§ 10.2.4 When use or storage of explosives or other hazardous materials or equipment, or unusual methods are necessary for execution of the Work, the Contractor shall exercise utmost care and carry on such activities under supervision of properly qualified personnel.

§ 10.2.5 The Contractor shall promptly remedy damage and loss (other than damage or loss insured under property insurance required by the Contract Documents) to property referred to in Sections 10.2.1.2 and 10.2.1.3 caused in whole or in part by the Contractor, a Subcontractor, a Sub-subcontractor, or anyone directly or indirectly employed by any of them, or by anyone for whose acts they may be liable and for which the Contractor is responsible under Sections 10.2.1.2 and 10.2.1.3. The Contractor may make a Claim for the cost to remedy the damage or loss to the extent such damage or loss is attributable to acts or omissions of the Owner or Architect or anyone directly or indirectly employed by either of them, or by anyone for whose acts either of them may be liable, and not attributable to the fault or negligence of the Contractor. The foregoing obligations of the Contractor are in addition to the Contractor's obligations under Section 3.18.

§ 10.2.6 The Contractor shall designate a responsible member of the Contractor's organization at the site whose duty shall be the prevention of accidents. This person shall be the Contractor's superintendent unless otherwise designated by the Contractor in writing to the Owner and Architect.

§ 10.2.7 The Contractor shall not permit any part of the construction or site to be loaded so as to cause damage or create an unsafe condition.

§ 10.2.8 Injury or Damage to Person or Property

If either party suffers injury or damage to person or property because of an act or omission of the other party, or of others for whose acts such party is legally responsible, notice of the injury or damage, whether or not insured, shall be given to the other party within a reasonable time not exceeding 21 days after discovery. The notice shall provide sufficient detail to enable the other party to investigate the matter.

§ 10.3 Hazardous Materials and Substances

§ 10.3.1 The Contractor is responsible for compliance with any requirements included in the Contract Documents regarding hazardous materials or substances. If the Contractor encounters a hazardous material or substance not addressed in the Contract Documents and if reasonable precautions will be inadequate to prevent foreseeable bodily injury or death to persons resulting from a material or substance, including but not limited to asbestos or polychlorinated biphenyl (PCB), encountered on the site by the Contractor, the Contractor shall, upon recognizing the condition, immediately stop Work in the affected area and notify the Owner and Architect of the condition.

§ 10.3.2 Upon receipt of the Contractor's notice, the Owner shall obtain the services of a licensed laboratory to verify the presence or absence of the material or substance reported by the Contractor and, in the event such material or substance is found to be present, to cause it to be rendered harmless. Unless otherwise required by the Contract Documents, the Owner shall furnish in writing to the Contractor and Architect the names and qualifications of persons or entities who are to perform tests verifying the presence or absence of the material or substance or who are to perform the task of removal or safe containment of the material or substance. The Contractor and the Architect will

AIA Document A201™ – 2017. Copyright © 1911, 1915, 1918, 1925, 1937, 1951, 1958, 1961, 1963, 1966, 1970, 1976, 1987, 1997, 2007 and 2017 by The American Institute of Architects**. All rights reserved.** **WARNING: This AIA® Document is protected by U.S. Copyright Law and International Treaties. Unauthorized reproduction or distribution of this AIA® Document, or any portion of it, may result in severe civil and criminal penalties, and will be prosecuted to the maximum extent possible under the law.** This document was produced by AIA software at 10:12:44 ET on 02/08/2019 under Order No.1632503783 which expires on 11/27/2019, and is not for resale.
User Notes: (1110459468)

promptly reply to the Owner in writing stating whether or not either has reasonable objection to the persons or entities proposed by the Owner. If either the Contractor or Architect has an objection to a person or entity proposed by the Owner, the Owner shall propose another to whom the Contractor and the Architect have no reasonable objection. When the material or substance has been rendered harmless, Work in the affected area shall resume upon written agreement of the Owner and Contractor. By Change Order, the Contract Time shall be extended appropriately and the Contract Sum shall be increased by the amount of the Contractor's reasonable additional costs of shutdown, delay, and start-up.

§ 10.3.3 To the fullest extent permitted by law, the Owner shall indemnify and hold harmless the Contractor, Subcontractors, Architect, Architect's consultants, and agents and employees of any of them from and against claims, damages, losses, and expenses, including but not limited to attorneys' fees, arising out of or resulting from performance of the Work in the affected area if in fact the material or substance presents the risk of bodily injury or death as described in Section 10.3.1 and has not been rendered harmless, provided that such claim, damage, loss, or expense is attributable to bodily injury, sickness, disease or death, or to injury to or destruction of tangible property (other than the Work itself), except to the extent that such damage, loss, or expense is due to the fault or negligence of the party seeking indemnity.

§ 10.3.4 The Owner shall not be responsible under this Section 10.3 for hazardous materials or substances the Contractor brings to the site unless such materials or substances are required by the Contract Documents. The Owner shall be responsible for hazardous materials or substances required by the Contract Documents, except to the extent of the Contractor's fault or negligence in the use and handling of such materials or substances.

§ 10.3.5 The Contractor shall reimburse the Owner for the cost and expense the Owner incurs (1) for remediation of hazardous materials or substances the Contractor brings to the site and negligently handles, or (2) where the Contractor fails to perform its obligations under Section 10.3.1, except to the extent that the cost and expense are due to the Owner's fault or negligence.

§ 10.3.6 If, without negligence on the part of the Contractor, the Contractor is held liable by a government agency for the cost of remediation of a hazardous material or substance solely by reason of performing Work as required by the Contract Documents, the Owner shall reimburse the Contractor for all cost and expense thereby incurred.

§ 10.4 Emergencies

In an emergency affecting safety of persons or property, the Contractor shall act, at the Contractor's discretion, to prevent threatened damage, injury, or loss. Additional compensation or extension of time claimed by the Contractor on account of an emergency shall be determined as provided in Article 15 and Article 7.

ARTICLE 11 INSURANCE AND BONDS

§ 11.1 Contractor's Insurance and Bonds

§ 11.1.1 The Contractor shall purchase and maintain insurance of the types and limits of liability, containing the endorsements, and subject to the terms and conditions, as described in the Agreement or elsewhere in the Contract Documents. The Contractor shall purchase and maintain the required insurance from an insurance company or insurance companies lawfully authorized to issue insurance in the jurisdiction where the Project is located. The Owner, Architect, and Architect's consultants shall be named as additional insureds under the Contractor's commercial general liability policy or as otherwise described in the Contract Documents.

§ 11.1.2 The Contractor shall provide surety bonds of the types, for such penal sums, and subject to such terms and conditions as required by the Contract Documents. The Contractor shall purchase and maintain the required bonds from a company or companies lawfully authorized to issue surety bonds in the jurisdiction where the Project is located.

§ 11.1.3 Upon the request of any person or entity appearing to be a potential beneficiary of bonds covering payment of obligations arising under the Contract, the Contractor shall promptly furnish a copy of the bonds or shall authorize a copy to be furnished.

§ 11.1.4 Notice of Cancellation or Expiration of Contractor's Required Insurance. Within three (3) business days of the date the Contractor becomes aware of an impending or actual cancellation or expiration of any insurance required by the Contract Documents, the Contractor shall provide notice to the Owner of such impending or actual cancellation or

AIA Document A201™ – 2017. Copyright © 1911, 1915, 1918, 1925, 1937, 1951, 1958, 1961, 1963, 1966, 1970, 1976, 1987, 1997, 2007 and 2017 by The American Institute of Architects**. All rights reserved. WARNING: This AIA® Document is protected by U.S. Copyright Law and International Treaties. Unauthorized reproduction or distribution of this AIA® Document, or any portion of it, may result in severe civil and criminal penalties, and will be prosecuted to the maximum extent possible under the law.** This document was produced by AIA software at 10:12:44 ET on 02/08/2019 under Order No.1632503783 which expires on 11/27/2019, and is not for resale.
User Notes: (1110459468)

expiration. Upon receipt of notice from the Contractor, the Owner shall, unless the lapse in coverage arises from an act or omission of the Owner, have the right to stop the Work until the lapse in coverage has been cured by the procurement of replacement coverage by the Contractor. The furnishing of notice by the Contractor shall not relieve the Contractor of any contractual obligation to provide any required coverage.

§ 11.2 Owner's Insurance

§ 11.2.1 The Owner shall purchase and maintain insurance of the types and limits of liability, containing the endorsements, and subject to the terms and conditions, as described in the Agreement or elsewhere in the Contract Documents. The Owner shall purchase and maintain the required insurance from an insurance company or insurance companies lawfully authorized to issue insurance in the jurisdiction where the Project is located.

§ 11.2.2 Failure to Purchase Required Property Insurance. If the Owner fails to purchase and maintain the required property insurance, with all of the coverages and in the amounts described in the Agreement or elsewhere in the Contract Documents, the Owner shall inform the Contractor in writing prior to commencement of the Work. Upon receipt of notice from the Owner, the Contractor may delay commencement of the Work and may obtain insurance that will protect the interests of the Contractor, Subcontractors, and Sub-Subcontractors in the Work. When the failure to provide coverage has been cured or resolved, the Contract Sum and Contract Time shall be equitably adjusted. In the event the Owner fails to procure coverage, the Owner waives all rights against the Contractor, Subcontractors, and Sub-subcontractors to the extent the loss to the Owner would have been covered by the insurance to have been procured by the Owner. The cost of the insurance shall be charged to the Owner by a Change Order. If the Owner does not provide written notice, and the Contractor is damaged by the failure or neglect of the Owner to purchase or maintain the required insurance, the Owner shall reimburse the Contractor for all reasonable costs and damages attributable thereto.

§ 11.2.3 Notice of Cancellation or Expiration of Owner's Required Property Insurance. Within three (3) business days of the date the Owner becomes aware of an impending or actual cancellation or expiration of any property insurance required by the Contract Documents, the Owner shall provide notice to the Contractor of such impending or actual cancellation or expiration. Unless the lapse in coverage arises from an act or omission of the Contractor: (1) the Contractor, upon receipt of notice from the Owner, shall have the right to stop the Work until the lapse in coverage has been cured by the procurement of replacement coverage by either the Owner or the Contractor; (2) the Contract Time and Contract Sum shall be equitably adjusted; and (3) the Owner waives all rights against the Contractor, Subcontractors, and Sub-subcontractors to the extent any loss to the Owner would have been covered by the insurance had it not expired or been cancelled. If the Contractor purchases replacement coverage, the cost of the insurance shall be charged to the Owner by an appropriate Change Order. The furnishing of notice by the Owner shall not relieve the Owner of any contractual obligation to provide required insurance.

§ 11.3 Waivers of Subrogation

§ 11.3.1 The Owner and Contractor waive all rights against (1) each other and any of their subcontractors, sub-subcontractors, agents, and employees, each of the other; (2) the Architect and Architect's consultants; and (3) Separate Contractors, if any, and any of their subcontractors, sub-subcontractors, agents, and employees, for damages caused by fire, or other causes of loss, to the extent those losses are covered by property insurance required by the Agreement or other property insurance applicable to the Project, except such rights as they have to proceeds of such insurance. The Owner or Contractor, as appropriate, shall require similar written waivers in favor of the individuals and entities identified above from the Architect, Architect's consultants, Separate Contractors, subcontractors, and sub-subcontractors. The policies of insurance purchased and maintained by each person or entity agreeing to waive claims pursuant to this section 11.3.1 shall not prohibit this waiver of subrogation. This waiver of subrogation shall be effective as to a person or entity (1) even though that person or entity would otherwise have a duty of indemnification, contractual or otherwise, (2) even though that person or entity did not pay the insurance premium directly or indirectly, or (3) whether or not the person or entity had an insurable interest in the damaged property.

§ 11.3.2 If during the Project construction period the Owner insures properties, real or personal or both, at or adjacent to the site by property insurance under policies separate from those insuring the Project, or if after final payment property insurance is to be provided on the completed Project through a policy or policies other than those insuring the Project during the construction period, to the extent permissible by such policies, the Owner waives all rights in accordance with the terms of Section 11.3.1 for damages caused by fire or other causes of loss covered by this separate property insurance.

AIA Document A201™ – 2017. Copyright © 1911, 1915, 1918, 1925, 1937, 1951, 1958, 1961, 1963, 1966, 1970, 1976, 1987, 1997, 2007 and 2017 by The American Institute of Architects**. All rights reserved.** **WARNING: This AIA® Document is protected by U.S. Copyright Law and International Treaties. Unauthorized reproduction or distribution of this AIA® Document, or any portion of it, may result in severe civil and criminal penalties, and will be prosecuted to the maximum extent possible under the law.** This document was produced by AIA software at 10:12:44 ET on 02/08/2019 under Order No.1632503783 which expires on 11/27/2019, and is not for resale.
User Notes: (1110459468)

§ 11.4 Loss of Use, Business Interruption, and Delay in Completion Insurance

The Owner, at the Owner's option, may purchase and maintain insurance that will protect the Owner against loss of use of the Owner's property, or the inability to conduct normal operations, due to fire or other causes of loss. The Owner waives all rights of action against the Contractor and Architect for loss of use of the Owner's property, due to fire or other hazards however caused.

§11.5 Adjustment and Settlement of Insured Loss

§ 11.5.1 A loss insured under the property insurance required by the Agreement shall be adjusted by the Owner as fiduciary and made payable to the Owner as fiduciary for the insureds, as their interests may appear, subject to requirements of any applicable mortgagee clause and of Section 11.5.2. The Owner shall pay the Architect and Contractor their just shares of insurance proceeds received by the Owner, and by appropriate agreements the Architect and Contractor shall make payments to their consultants and Subcontractors in similar manner.

§ 11.5.2 Prior to settlement of an insured loss, the Owner shall notify the Contractor of the terms of the proposed settlement as well as the proposed allocation of the insurance proceeds. The Contractor shall have 14 days from receipt of notice to object to the proposed settlement or allocation of the proceeds. If the Contractor does not object, the Owner shall settle the loss and the Contractor shall be bound by the settlement and allocation. Upon receipt, the Owner shall deposit the insurance proceeds in a separate account and make the appropriate distributions. Thereafter, if no other agreement is made or the Owner does not terminate the Contract for convenience, the Owner and Contractor shall execute a Change Order for reconstruction of the damaged or destroyed Work in the amount allocated for that purpose. If the Contractor timely objects to either the terms of the proposed settlement or the allocation of the proceeds, the Owner may proceed to settle the insured loss, and any dispute between the Owner and Contractor arising out of the settlement or allocation of the proceeds shall be resolved pursuant to Article 15. Pending resolution of any dispute, the Owner may issue a Construction Change Directive for the reconstruction of the damaged or destroyed Work.

ARTICLE 12 UNCOVERING AND CORRECTION OF WORK

§ 12.1 Uncovering of Work

§ 12.1.1 If a portion of the Work is covered contrary to the Architect's request or to requirements specifically expressed in the Contract Documents, it must, if requested in writing by the Architect, be uncovered for the Architect's examination and be replaced at the Contractor's expense without change in the Contract Time.

§ 12.1.2 If a portion of the Work has been covered that the Architect has not specifically requested to examine prior to its being covered, the Architect may request to see such Work and it shall be uncovered by the Contractor. If such Work is in accordance with the Contract Documents, the Contractor shall be entitled to an equitable adjustment to the Contract Sum and Contract Time as may be appropriate. If such Work is not in accordance with the Contract Documents, the costs of uncovering the Work, and the cost of correction, shall be at the Contractor's expense.

§ 12.2 Correction of Work

§ 12.2.1 Before Substantial Completion

The Contractor shall promptly correct Work rejected by the Architect or failing to conform to the requirements of the Contract Documents, discovered before Substantial Completion and whether or not fabricated, installed or completed. Costs of correcting such rejected Work, including additional testing and inspections, the cost of uncovering and replacement, and compensation for the Architect's services and expenses made necessary thereby, shall be at the Contractor's expense.

§ 12.2.2 After Substantial Completion

§ 12.2.2.1 In addition to the Contractor's obligations under Section 3.5, if, within one year after the date of Substantial Completion of the Work or designated portion thereof or after the date for commencement of warranties established under Section 9.9.1, or by terms of any applicable special warranty required by the Contract Documents, any of the Work is found to be not in accordance with the requirements of the Contract Documents, the Contractor shall correct it promptly after receipt of notice from the Owner to do so, unless the Owner has previously given the Contractor a written acceptance of such condition. The Owner shall give such notice promptly after discovery of the condition. During the one-year period for correction of Work, if the Owner fails to notify the Contractor and give the Contractor an opportunity to make the correction, the Owner waives the rights to require correction by the Contractor and to make a claim for breach of warranty. If the Contractor fails to correct nonconforming Work within a reasonable time during

AIA Document A201™ – 2017. Copyright © 1911, 1915, 1918, 1925, 1937, 1951, 1958, 1961, 1963, 1966, 1970, 1976, 1987, 1997, 2007 and 2017 by The American Institute of Architects**. All rights reserved.** **WARNING: This AIA® Document is protected by U.S. Copyright Law and International Treaties. Unauthorized reproduction or distribution of this AIA® Document, or any portion of it, may result in severe civil and criminal penalties, and will be prosecuted to the maximum extent possible under the law.** This document was produced by AIA software at 10:12:44 ET on 02/08/2019 under Order No.1632503783 which expires on 11/27/2019, and is not for resale.
User Notes: (1110459468)

that period after receipt of notice from the Owner or Architect, the Owner may correct it in accordance with Section 2.5.

§ 12.2.2.2 The one-year period for correction of Work shall be extended with respect to portions of Work first performed after Substantial Completion by the period of time between Substantial Completion and the actual completion of that portion of the Work.

§ 12.2.2.3 The one-year period for correction of Work shall not be extended by corrective Work performed by the Contractor pursuant to this Section 12.2.

§ 12.2.3 The Contractor shall remove from the site portions of the Work that are not in accordance with the requirements of the Contract Documents and are neither corrected by the Contractor nor accepted by the Owner.

§ 12.2.4 The Contractor shall bear the cost of correcting destroyed or damaged construction of the Owner or Separate Contractors, whether completed or partially completed, caused by the Contractor's correction or removal of Work that is not in accordance with the requirements of the Contract Documents.

§ 12.2.5 Nothing contained in this Section 12.2 shall be construed to establish a period of limitation with respect to other obligations the Contractor has under the Contract Documents. Establishment of the one-year period for correction of Work as described in Section 12.2.2 relates only to the specific obligation of the Contractor to correct the Work, and has no relationship to the time within which the obligation to comply with the Contract Documents may be sought to be enforced, nor to the time within which proceedings may be commenced to establish the Contractor's liability with respect to the Contractor's obligations other than specifically to correct the Work.

§ 12.3 Acceptance of Nonconforming Work

If the Owner prefers to accept Work that is not in accordance with the requirements of the Contract Documents, the Owner may do so instead of requiring its removal and correction, in which case the Contract Sum will be reduced as appropriate and equitable. Such adjustment shall be effected whether or not final payment has been made.

ARTICLE 13 MISCELLANEOUS PROVISIONS

§ 13.1 Governing Law

The Contract shall be governed by the law of the place where the Project is located, excluding that jurisdiction's choice of law rules. If the parties have selected arbitration as the method of binding dispute resolution, the Federal Arbitration Act shall govern Section 15.4.

§ 13.2 Successors and Assigns

§ 13.2.1 The Owner and Contractor respectively bind themselves, their partners, successors, assigns, and legal representatives to covenants, agreements, and obligations contained in the Contract Documents. Except as provided in Section 13.2.2, neither party to the Contract shall assign the Contract as a whole without written consent of the other. If either party attempts to make an assignment without such consent, that party shall nevertheless remain legally responsible for all obligations under the Contract.

§ 13.2.2 The Owner may, without consent of the Contractor, assign the Contract to a lender providing construction financing for the Project, if the lender assumes the Owner's rights and obligations under the Contract Documents. The Contractor shall execute all consents reasonably required to facilitate the assignment.

§ 13.3 Rights and Remedies

§ 13.3.1 Duties and obligations imposed by the Contract Documents and rights and remedies available thereunder shall be in addition to and not a limitation of duties, obligations, rights, and remedies otherwise imposed or available by law.

§ 13.3.2 No action or failure to act by the Owner, Architect, or Contractor shall constitute a waiver of a right or duty afforded them under the Contract, nor shall such action or failure to act constitute approval of or acquiescence in a breach thereunder, except as may be specifically agreed upon in writing.

AIA Document A201™ – 2017. Copyright © 1911, 1915, 1918, 1925, 1937, 1951, 1958, 1961, 1963, 1966, 1970, 1976, 1987, 1997, 2007 and 2017 by The American Institute of Architects**. All rights reserved.** **WARNING: This AIA® Document is protected by U.S. Copyright Law and International Treaties. Unauthorized reproduction or distribution of this AIA® Document, or any portion of it, may result in severe civil and criminal penalties, and will be prosecuted to the maximum extent possible under the law.** This document was produced by AIA software at 10:12:44 ET on 02/08/2019 under Order No.1632503783 which expires on 11/27/2019, and is not for resale.
User Notes: (1110459468)

§ 13.4 Tests and Inspections

§ 13.4.1 Tests, inspections, and approvals of portions of the Work shall be made as required by the Contract Documents and by applicable laws, statutes, ordinances, codes, rules, and regulations or lawful orders of public authorities. Unless otherwise provided, the Contractor shall make arrangements for such tests, inspections, and approvals with an independent testing laboratory or entity acceptable to the Owner, or with the appropriate public authority, and shall bear all related costs of tests, inspections, and approvals. The Contractor shall give the Architect timely notice of when and where tests and inspections are to be made so that the Architect may be present for such procedures. The Owner shall bear costs of tests, inspections, or approvals that do not become requirements until after bids are received or negotiations concluded. The Owner shall directly arrange and pay for tests, inspections, or approvals where building codes or applicable laws or regulations so require.

§ 13.4.2 If the Architect, Owner, or public authorities having jurisdiction determine that portions of the Work require additional testing, inspection, or approval not included under Section 13.4.1, the Architect will, upon written authorization from the Owner, instruct the Contractor to make arrangements for such additional testing, inspection, or approval, by an entity acceptable to the Owner, and the Contractor shall give timely notice to the Architect of when and where tests and inspections are to be made so that the Architect may be present for such procedures. Such costs, except as provided in Section 13.4.3, shall be at the Owner's expense.

§ 13.4.3 If procedures for testing, inspection, or approval under Sections 13.4.1 and 13.4.2 reveal failure of the portions of the Work to comply with requirements established by the Contract Documents, all costs made necessary by such failure, including those of repeated procedures and compensation for the Architect's services and expenses, shall be at the Contractor's expense.

§ 13.4.4 Required certificates of testing, inspection, or approval shall, unless otherwise required by the Contract Documents, be secured by the Contractor and promptly delivered to the Architect.

§ 13.4.5 If the Architect is to observe tests, inspections, or approvals required by the Contract Documents, the Architect will do so promptly and, where practicable, at the normal place of testing.

§ 13.4.6 Tests or inspections conducted pursuant to the Contract Documents shall be made promptly to avoid unreasonable delay in the Work.

§ 13.5 Interest

Payments due and unpaid under the Contract Documents shall bear interest from the date payment is due at the rate the parties agree upon in writing or, in the absence thereof, at the legal rate prevailing from time to time at the place where the Project is located.

ARTICLE 14 TERMINATION OR SUSPENSION OF THE CONTRACT

§ 14.1 Termination by the Contractor

§ 14.1.1 The Contractor may terminate the Contract if the Work is stopped for a period of 30 consecutive days through no act or fault of the Contractor, a Subcontractor, a Sub-subcontractor, their agents or employees, or any other persons or entities performing portions of the Work, for any of the following reasons:

- **.1** Issuance of an order of a court or other public authority having jurisdiction that requires all Work to be stopped;
- **.2** An act of government, such as a declaration of national emergency, that requires all Work to be stopped;
- **.3** Because the Architect has not issued a Certificate for Payment and has not notified the Contractor of the reason for withholding certification as provided in Section 9.4.1, or because the Owner has not made payment on a Certificate for Payment within the time stated in the Contract Documents; or
- **.4** The Owner has failed to furnish to the Contractor reasonable evidence as required by Section 2.2.

§ 14.1.2 The Contractor may terminate the Contract if, through no act or fault of the Contractor, a Subcontractor, a Sub-subcontractor, their agents or employees, or any other persons or entities performing portions of the Work, repeated suspensions, delays, or interruptions of the entire Work by the Owner as described in Section 14.3, constitute in the aggregate more than 100 percent of the total number of days scheduled for completion, or 120 days in any 365-day period, whichever is less.

AIA Document A201™ – 2017. Copyright © 1911, 1915, 1918, 1925, 1937, 1951, 1958, 1961, 1963, 1966, 1970, 1976, 1987, 1997, 2007 and 2017 by The American Institute of Architects**. All rights reserved.** **WARNING: This AIA® Document is protected by U.S. Copyright Law and International Treaties. Unauthorized reproduction or distribution of this AIA® Document, or any portion of it, may result in severe civil and criminal penalties, and will be prosecuted to the maximum extent possible under the law.** This document was produced by AIA software at 10:12:44 ET on 02/08/2019 under Order No.1632503783 which expires on 11/27/2019, and is not for resale.
User Notes: (1110459468)

§ 14.1.3 If one of the reasons described in Section 14.1.1 or 14.1.2 exists, the Contractor may, upon seven days' notice to the Owner and Architect, terminate the Contract and recover from the Owner payment for Work executed, as well as reasonable overhead and profit on Work not executed, and costs incurred by reason of such termination.

§ 14.1.4 If the Work is stopped for a period of 60 consecutive days through no act or fault of the Contractor, a Subcontractor, a Sub-subcontractor, or their agents or employees or any other persons or entities performing portions of the Work because the Owner has repeatedly failed to fulfill the Owner's obligations under the Contract Documents with respect to matters important to the progress of the Work, the Contractor may, upon seven additional days' notice to the Owner and the Architect, terminate the Contract and recover from the Owner as provided in Section 14.1.3.

§ 14.2 Termination by the Owner for Cause

§ 14.2.1 The Owner may terminate the Contract if the Contractor

- **.1** repeatedly refuses or fails to supply enough properly skilled workers or proper materials;
- **.2** fails to make payment to Subcontractors or suppliers in accordance with the respective agreements between the Contractor and the Subcontractors or suppliers;
- **.3** repeatedly disregards applicable laws, statutes, ordinances, codes, rules and regulations, or lawful orders of a public authority; or
- **.4** otherwise is guilty of substantial breach of a provision of the Contract Documents.

§ 14.2.2 When any of the reasons described in Section 14.2.1 exist, and upon certification by the Architect that sufficient cause exists to justify such action, the Owner may, without prejudice to any other rights or remedies of the Owner and after giving the Contractor and the Contractor's surety, if any, seven days' notice, terminate employment of the Contractor and may, subject to any prior rights of the surety:

- **.1** Exclude the Contractor from the site and take possession of all materials, equipment, tools, and construction equipment and machinery thereon owned by the Contractor;
- **.2** Accept assignment of subcontracts pursuant to Section 5.4; and
- **.3** Finish the Work by whatever reasonable method the Owner may deem expedient. Upon written request of the Contractor, the Owner shall furnish to the Contractor a detailed accounting of the costs incurred by the Owner in finishing the Work.

§ 14.2.3 When the Owner terminates the Contract for one of the reasons stated in Section 14.2.1, the Contractor shall not be entitled to receive further payment until the Work is finished.

§ 14.2.4 If the unpaid balance of the Contract Sum exceeds costs of finishing the Work, including compensation for the Architect's services and expenses made necessary thereby, and other damages incurred by the Owner and not expressly waived, such excess shall be paid to the Contractor. If such costs and damages exceed the unpaid balance, the Contractor shall pay the difference to the Owner. The amount to be paid to the Contractor or Owner, as the case may be, shall be certified by the Initial Decision Maker, upon application, and this obligation for payment shall survive termination of the Contract.

§ 14.3 Suspension by the Owner for Convenience

§ 14.3.1 The Owner may, without cause, order the Contractor in writing to suspend, delay or interrupt the Work, in whole or in part for such period of time as the Owner may determine.

§ 14.3.2 The Contract Sum and Contract Time shall be adjusted for increases in the cost and time caused by suspension, delay, or interruption under Section 14.3.1. Adjustment of the Contract Sum shall include profit. No adjustment shall be made to the extent

- **.1** that performance is, was, or would have been, so suspended, delayed, or interrupted, by another cause for which the Contractor is responsible; or
- **.2** that an equitable adjustment is made or denied under another provision of the Contract.

§ 14.4 Termination by the Owner for Convenience

§ 14.4.1 The Owner may, at any time, terminate the Contract for the Owner's convenience and without cause.

§ 14.4.2 Upon receipt of notice from the Owner of such termination for the Owner's convenience, the Contractor shall

- **.1** cease operations as directed by the Owner in the notice;

AIA Document A201™ – 2017. Copyright © 1911, 1915, 1918, 1925, 1937, 1951, 1958, 1961, 1963, 1966, 1970, 1976, 1987, 1997, 2007 and 2017 by The American Institute of Architects**. All rights reserved. WARNING: This AIA® Document is protected by U.S. Copyright Law and International Treaties. Unauthorized reproduction or distribution of this AIA® Document, or any portion of it, may result in severe civil and criminal penalties, and will be prosecuted to the maximum extent possible under the law.** This document was produced by AIA software at 10:12:44 ET on 02/08/2019 under Order No.1632503783 which expires on 11/27/2019, and is not for resale.
User Notes: (1110459468)

.2 take actions necessary, or that the Owner may direct, for the protection and preservation of the Work; and

.3 except for Work directed to be performed prior to the effective date of termination stated in the notice, terminate all existing subcontracts and purchase orders and enter into no further subcontracts and purchase orders.

§ 14.4.3 In case of such termination for the Owner's convenience, the Owner shall pay the Contractor for Work properly executed; costs incurred by reason of the termination, including costs attributable to termination of Subcontracts; and the termination fee, if any, set forth in the Agreement.

ARTICLE 15 CLAIMS AND DISPUTES

§ 15.1 Claims

§ 15.1.1 Definition

A Claim is a demand or assertion by one of the parties seeking, as a matter of right, payment of money, a change in the Contract Time, or other relief with respect to the terms of the Contract. The term "Claim" also includes other disputes and matters in question between the Owner and Contractor arising out of or relating to the Contract. The responsibility to substantiate Claims shall rest with the party making the Claim. This Section 15.1.1 does not require the Owner to file a Claim in order to impose liquidated damages in accordance with the Contract Documents.

§ 15.1.2 Time Limits on Claims

The Owner and Contractor shall commence all Claims and causes of action against the other and arising out of or related to the Contract, whether in contract, tort, breach of warranty or otherwise, in accordance with the requirements of the binding dispute resolution method selected in the Agreement and within the period specified by applicable law, but in any case not more than 10 years after the date of Substantial Completion of the Work. The Owner and Contractor waive all Claims and causes of action not commenced in accordance with this Section 15.1.2.

§ 15.1.3 Notice of Claims

§ 15.1.3.1 Claims by either the Owner or Contractor, where the condition giving rise to the Claim is first discovered prior to expiration of the period for correction of the Work set forth in Section 12.2.2, shall be initiated by notice to the other party and to the Initial Decision Maker with a copy sent to the Architect, if the Architect is not serving as the Initial Decision Maker. Claims by either party under this Section 15.1.3.1 shall be initiated within 21 days after occurrence of the event giving rise to such Claim or within 21 days after the claimant first recognizes the condition giving rise to the Claim, whichever is later.

§ 15.1.3.2 Claims by either the Owner or Contractor, where the condition giving rise to the Claim is first discovered after expiration of the period for correction of the Work set forth in Section 12.2.2, shall be initiated by notice to the other party. In such event, no decision by the Initial Decision Maker is required.

§ 15.1.4 Continuing Contract Performance

§ 15.1.4.1 Pending final resolution of a Claim, except as otherwise agreed in writing or as provided in Section 9.7 and Article 14, the Contractor shall proceed diligently with performance of the Contract and the Owner shall continue to make payments in accordance with the Contract Documents.

§ 15.1.4.2 The Contract Sum and Contract Time shall be adjusted in accordance with the Initial Decision Maker's decision, subject to the right of either party to proceed in accordance with this Article 15. The Architect will issue Certificates for Payment in accordance with the decision of the Initial Decision Maker.

§ 15.1.5 Claims for Additional Cost

If the Contractor wishes to make a Claim for an increase in the Contract Sum, notice as provided in Section 15.1.3 shall be given before proceeding to execute the portion of the Work that is the subject of the Claim. Prior notice is not required for Claims relating to an emergency endangering life or property arising under Section 10.4.

§ 15.1.6 Claims for Additional Time

§ 15.1.6.1 If the Contractor wishes to make a Claim for an increase in the Contract Time, notice as provided in Section 15.1.3 shall be given. The Contractor's Claim shall include an estimate of cost and of probable effect of delay on progress of the Work. In the case of a continuing delay, only one Claim is necessary.

AIA Document A201™ – 2017. Copyright © 1911, 1915, 1918, 1925, 1937, 1951, 1958, 1961, 1963, 1966, 1970, 1976, 1987, 1997, 2007 and 2017 by The American Institute of Architects**. All rights reserved.** **WARNING: This AIA® Document is protected by U.S. Copyright Law and International Treaties. Unauthorized reproduction or distribution of this AIA® Document, or any portion of it, may result in severe civil and criminal penalties, and will be prosecuted to the maximum extent possible under the law.** This document was produced by AIA software at 10:12:44 ET on 02/08/2019 under Order No.1632503783 which expires on 11/27/2019, and is not for resale.
User Notes: (1110459468)

§ 15.1.6.2 If adverse weather conditions are the basis for a Claim for additional time, such Claim shall be documented by data substantiating that weather conditions were abnormal for the period of time, could not have been reasonably anticipated, and had an adverse effect on the scheduled construction.

§ 15.1.7 Waiver of Claims for Consequential Damages

The Contractor and Owner waive Claims against each other for consequential damages arising out of or relating to this Contract. This mutual waiver includes

.1 damages incurred by the Owner for rental expenses, for losses of use, income, profit, financing, business and reputation, and for loss of management or employee productivity or of the services of such persons; and

.2 damages incurred by the Contractor for principal office expenses including the compensation of personnel stationed there, for losses of financing, business and reputation, and for loss of profit, except anticipated profit arising directly from the Work.

This mutual waiver is applicable, without limitation, to all consequential damages due to either party's termination in accordance with Article 14. Nothing contained in this Section 15.1.7 shall be deemed to preclude assessment of liquidated damages, when applicable, in accordance with the requirements of the Contract Documents.

§ 15.2 Initial Decision

§ 15.2.1 Claims, excluding those where the condition giving rise to the Claim is first discovered after expiration of the period for correction of the Work set forth in Section 12.2.2 or arising under Sections 10.3, 10.4, and 11.5, shall be referred to the Initial Decision Maker for initial decision. The Architect will serve as the Initial Decision Maker, unless otherwise indicated in the Agreement. Except for those Claims excluded by this Section 15.2.1, an initial decision shall be required as a condition precedent to mediation of any Claim. If an initial decision has not been rendered within 30 days after the Claim has been referred to the Initial Decision Maker, the party asserting the Claim may demand mediation and binding dispute resolution without a decision having been rendered. Unless the Initial Decision Maker and all affected parties agree, the Initial Decision Maker will not decide disputes between the Contractor and persons or entities other than the Owner.

§ 15.2.2 The Initial Decision Maker will review Claims and within ten days of the receipt of a Claim take one or more of the following actions: (1) request additional supporting data from the claimant or a response with supporting data from the other party, (2) reject the Claim in whole or in part, (3) approve the Claim, (4) suggest a compromise, or (5) advise the parties that the Initial Decision Maker is unable to resolve the Claim if the Initial Decision Maker lacks sufficient information to evaluate the merits of the Claim or if the Initial Decision Maker concludes that, in the Initial Decision Maker's sole discretion, it would be inappropriate for the Initial Decision Maker to resolve the Claim.

§ 15.2.3 In evaluating Claims, the Initial Decision Maker may, but shall not be obligated to, consult with or seek information from either party or from persons with special knowledge or expertise who may assist the Initial Decision Maker in rendering a decision. The Initial Decision Maker may request the Owner to authorize retention of such persons at the Owner's expense.

§ 15.2.4 If the Initial Decision Maker requests a party to provide a response to a Claim or to furnish additional supporting data, such party shall respond, within ten days after receipt of the request, and shall either (1) provide a response on the requested supporting data, (2) advise the Initial Decision Maker when the response or supporting data will be furnished, or (3) advise the Initial Decision Maker that no supporting data will be furnished. Upon receipt of the response or supporting data, if any, the Initial Decision Maker will either reject or approve the Claim in whole or in part.

§ 15.2.5 The Initial Decision Maker will render an initial decision approving or rejecting the Claim, or indicating that the Initial Decision Maker is unable to resolve the Claim. This initial decision shall (1) be in writing; (2) state the reasons therefor; and (3) notify the parties and the Architect, if the Architect is not serving as the Initial Decision Maker, of any change in the Contract Sum or Contract Time or both. The initial decision shall be final and binding on the parties but subject to mediation and, if the parties fail to resolve their dispute through mediation, to binding dispute resolution.

§ 15.2.6 Either party may file for mediation of an initial decision at any time, subject to the terms of Section 15.2.6.1.

AIA Document A201™ – 2017. Copyright © 1911, 1915, 1918, 1925, 1937, 1951, 1958, 1961, 1963, 1966, 1970, 1976, 1987, 1997, 2007 and 2017 by The American Institute of Architects**. All rights reserved.** **WARNING: This AIA® Document is protected by U.S. Copyright Law and International Treaties. Unauthorized reproduction or distribution of this AIA® Document, or any portion of it, may result in severe civil and criminal penalties, and will be prosecuted to the maximum extent possible under the law.** This document was produced by AIA software at 10:12:44 ET on 02/08/2019 under Order No.1632503783 which expires on 11/27/2019, and is not for resale.
User Notes: (1110459468)

§ 15.2.6.1 Either party may, within 30 days from the date of receipt of an initial decision, demand in writing that the other party file for mediation. If such a demand is made and the party receiving the demand fails to file for mediation within 30 days after receipt thereof, then both parties waive their rights to mediate or pursue binding dispute resolution proceedings with respect to the initial decision.

§ 15.2.7 In the event of a Claim against the Contractor, the Owner may, but is not obligated to, notify the surety, if any, of the nature and amount of the Claim. If the Claim relates to a possibility of a Contractor's default, the Owner may, but is not obligated to, notify the surety and request the surety's assistance in resolving the controversy.

§ 15.2.8 If a Claim relates to or is the subject of a mechanic's lien, the party asserting such Claim may proceed in accordance with applicable law to comply with the lien notice or filing deadlines.

§ 15.3 Mediation

§ 15.3.1 Claims, disputes, or other matters in controversy arising out of or related to the Contract, except those waived as provided for in Sections 9.10.4, 9.10.5, and 15.1.7, shall be subject to mediation as a condition precedent to binding dispute resolution.

§ 15.3.2 The parties shall endeavor to resolve their Claims by mediation which, unless the parties mutually agree otherwise, shall be administered by the American Arbitration Association in accordance with its Construction Industry Mediation Procedures in effect on the date of the Agreement. A request for mediation shall be made in writing, delivered to the other party to the Contract, and filed with the person or entity administering the mediation. The request may be made concurrently with the filing of binding dispute resolution proceedings but, in such event, mediation shall proceed in advance of binding dispute resolution proceedings, which shall be stayed pending mediation for a period of 60 days from the date of filing, unless stayed for a longer period by agreement of the parties or court order. If an arbitration is stayed pursuant to this Section 15.3.2, the parties may nonetheless proceed to the selection of the arbitrator(s) and agree upon a schedule for later proceedings.

§ 15.3.3 Either party may, within 30 days from the date that mediation has been concluded without resolution of the dispute or 60 days after mediation has been demanded without resolution of the dispute, demand in writing that the other party file for binding dispute resolution. If such a demand is made and the party receiving the demand fails to file for binding dispute resolution within 60 days after receipt thereof, then both parties waive their rights to binding dispute resolution proceedings with respect to the initial decision.

§ 15.3.4 The parties shall share the mediator's fee and any filing fees equally. The mediation shall be held in the place where the Project is located, unless another location is mutually agreed upon. Agreements reached in mediation shall be enforceable as settlement agreements in any court having jurisdiction thereof.

§ 15.4 Arbitration

§ 15.4.1 If the parties have selected arbitration as the method for binding dispute resolution in the Agreement, any Claim subject to, but not resolved by, mediation shall be subject to arbitration which, unless the parties mutually agree otherwise, shall be administered by the American Arbitration Association in accordance with its Construction Industry Arbitration Rules in effect on the date of the Agreement. The Arbitration shall be conducted in the place where the Project is located, unless another location is mutually agreed upon. A demand for arbitration shall be made in writing, delivered to the other party to the Contract, and filed with the person or entity administering the arbitration. The party filing a notice of demand for arbitration must assert in the demand all Claims then known to that party on which arbitration is permitted to be demanded.

§ 15.4.1.1 A demand for arbitration shall be made no earlier than concurrently with the filing of a request for mediation, but in no event shall it be made after the date when the institution of legal or equitable proceedings based on the Claim would be barred by the applicable statute of limitations. For statute of limitations purposes, receipt of a written demand for arbitration by the person or entity administering the arbitration shall constitute the institution of legal or equitable proceedings based on the Claim.

§ 15.4.2 The award rendered by the arbitrator or arbitrators shall be final, and judgment may be entered upon it in accordance with applicable law in any court having jurisdiction thereof.

AIA Document A201™ – 2017. Copyright © 1911, 1915, 1918, 1925, 1937, 1951, 1958, 1961, 1963, 1966, 1970, 1976, 1987, 1997, 2007 and 2017 by The American Institute of Architects**. All rights reserved.** **WARNING: This AIA® Document is protected by U.S. Copyright Law and International Treaties. Unauthorized reproduction or distribution of this AIA® Document, or any portion of it, may result in severe civil and criminal penalties, and will be prosecuted to the maximum extent possible under the law.** This document was produced by AIA software at 10:12:44 ET on 02/08/2019 under Order No.1632503783 which expires on 11/27/2019, and is not for resale.
User Notes: (1110459468)

§ 15.4.3 The foregoing agreement to arbitrate and other agreements to arbitrate with an additional person or entity duly consented to by parties to the Agreement, shall be specifically enforceable under applicable law in any court having jurisdiction thereof.

§ 15.4.4 Consolidation or Joinder

§ 15.4.4.1 Subject to the rules of the American Arbitration Association or other applicable arbitration rules, either party may consolidate an arbitration conducted under this Agreement with any other arbitration to which it is a party provided that (1) the arbitration agreement governing the other arbitration permits consolidation, (2) the arbitrations to be consolidated substantially involve common questions of law or fact, and (3) the arbitrations employ materially similar procedural rules and methods for selecting arbitrator(s).

§ 15.4.4.2 Subject to the rules of the American Arbitration Association or other applicable arbitration rules, either party may include by joinder persons or entities substantially involved in a common question of law or fact whose presence is required if complete relief is to be accorded in arbitration, provided that the party sought to be joined consents in writing to such joinder. Consent to arbitration involving an additional person or entity shall not constitute consent to arbitration of any claim, dispute or other matter in question not described in the written consent.

§ 15.4.4.3 The Owner and Contractor grant to any person or entity made a party to an arbitration conducted under this Section 15.4, whether by joinder or consolidation, the same rights of joinder and consolidation as those of the Owner and Contractor under this Agreement.

AIA Document A201™ – 2017. Copyright © 1911, 1915, 1918, 1925, 1937, 1951, 1958, 1961, 1963, 1966, 1970, 1976, 1987, 1997, 2007 and 2017 by The American Institute of Architects**. All rights reserved.** **WARNING: This AIA® Document is protected by U.S. Copyright Law and International Treaties. Unauthorized reproduction or distribution of this AIA® Document, or any portion of it, may result in severe civil and criminal penalties, and will be prosecuted to the maximum extent possible under the law.** This document was produced by AIA software at 10:12:44 ET on 02/08/2019 under Order No.1632503783 which expires on 11/27/2019, and is not for resale.
User Notes: (1110459468)

Additions and Deletions Report for
AIA® Document A201™ – 2017

This Additions and Deletions Report, as defined on page 1 of the associated document, reproduces below all text the author has added to the standard form AIA document in order to complete it, as well as any text the author may have added to or deleted from the original AIA text. Added text is shown underlined. Deleted text is indicated with a horizontal line through the original AIA text.

Note: This Additions and Deletions Report is provided for information purposes only and is not incorporated into or constitute any part of the associated AIA document. This Additions and Deletions Report and its associated document were generated simultaneously by AIA software at 10:12:44 ET on 02/08/2019.

PAGE 1

17-13 OSU College of Med. at Hastings Remodel
Tahlequah, OK

...

Cherokee Nation Business
777 West Cherokee St.
Catoosa, OK 74015

...

James R. Childers, Inc.
45 South 4th Street
Fort Smith, AR 72901

Additions and Deletions Report for AIA Document A201™ – 2017. Copyright © 1911, 1915, 1918, 1925, 1937, 1951, 1958, 1961, 1963, 1966, 1970, 1976, 1987, 1997, 2007 and 2017 by The American Institute of Architects. **All rights reserved. WARNING: This AIA® Document is protected by U.S. Copyright Law and International Treaties. Unauthorized reproduction or distribution of this AIA® Document, or any portion of it, may result in severe civil and criminal penalties, and will be prosecuted to the maximum extent possible under the law.** This document was produced by AIA software at 10:12:44 ET on 02/08/2019 under Order No.1632503783 which expires on 11/27/2019, and is not for resale.
User Notes: (1110459468)

SECTION 01 2200

UNIT PRICES

PART 1 - GENERAL

1.1 SUMMARY

A. Section includes administrative and procedural requirements for unit prices.

1.2 DEFINITIONS

A. Unit price is an amount incorporated in the Agreement, applicable during the duration of the Work as a price per unit of measurement for materials, equipment, or services, or a portion of the Work, added to or deducted from the Contract Sum by appropriate modification, if the scope of Work or estimated quantities of Work required by the Contract Documents are increased or decreased.

1.3 PROCEDURES

A. Unit prices include all necessary material, plus cost for delivery, installation, insurance, applicable taxes, overhead, and profit.

B. Measurement and Payment: See individual Specification Sections for work that requires establishment of unit prices. Methods of measurement and payment for unit prices are specified in those Sections.

C. Owner reserves the right to reject Contractor's measurement of work-in-place that involves use of established unit prices and to have this work measured, at Owner's expense, by an independent surveyor acceptable to Contractor.

D. List of Unit Prices: A schedule of unit prices is included in Part 3. Specification Sections referenced in the schedule contain requirements for materials described under each unit price.

PART 2 - PRODUCTS (Not Used)

PART 3 - EXECUTION

3.1 SCHEDULE OF UNIT PRICES

A. Item No. 1 - Rock Excavation:

1. Description: Rock excavation in accordance with Division 31 Section “Earthwork”.
2. Unit of Measurement: Cubic yard of rock excavated.

END OF SECTION

SECTION 01 2300

ALTERNATES

PART 1 - GENERAL

1.1 SUMMARY

A. Section includes administrative and procedural requirements for alternates.

1.2 DEFINITIONS

A. Alternate: An amount proposed by bidders and stated on the Bid Form for certain work defined in the bidding requirements that may be added to or deducted from the base bid amount if Owner decides to accept a corresponding change either in the amount of construction to be completed or in the products, materials, equipment, systems, or installation methods described in the Contract Documents.

1. Alternates described in this Section are part of the Work only if enumerated in the Agreement.
2. The cost or credit for each alternate is the net addition to or deduction from the Contract Sum to incorporate alternate into the Work. No other adjustments are made to the Contract Sum.

1.3 PROCEDURES

A. Documentation: Show compliance with requirements for accepted alternates and the following, as applicable:

1. Coordination information, including a list of changes or revisions needed to other parts of the Work and to construction performed by Owner and separate contractors that will be necessary to accommodate accepted alternates.
2. Product Data, including drawings and descriptions of products and fabrication and installation procedures.
3. Samples, where applicable or requested.
4. Certificates and qualification data, where applicable or requested.
5. Material test reports from a qualified testing agency indicating and interpreting test results for compliance with requirements indicated.
6. Research reports evidencing compliance with building code in effect for Project, from ICC-ES.
7. Detailed comparison of Contractor's construction schedule using accepted alternates with products specified for the Work, including effect on the overall Contract Time. If specified product or method of construction cannot be provided within the Contract Time, include letter from manufacturer, on manufacturer's letterhead, stating date of receipt of purchase order, lack of availability, or delays in delivery.
8. Cost information, including change in the Contract Sum.

B. Coordination: Revise or adjust affected adjacent work as necessary to completely integrate work of the alternate into Project.

1. Include as part of each alternate, miscellaneous devices, accessory objects, and similar items incidental to or required for a complete installation whether or not indicated as part of alternate.

C. Notification: Immediately following award of the Contract, notify each party involved, in writing, of the status of each alternate. Indicate if alternates have been accepted, rejected, or deferred for later consideration. Include a complete description of negotiated revisions to alternates.

D. Execute accepted alternates under the same conditions as other work of the Contract.

E. Schedule: A schedule of alternates is included at the end of this Section. Specification Sections referenced in schedule contain requirements for materials necessary to achieve the work described under each alternate.

F. Acceptance of Alternates will be exercised at option of Owner in any order or combination.

PART 2 - PRODUCTS (Not Used)

PART 3 - EXECUTION

3.1 SCHEDULE OF ALTERNATES

A. ALTERNATE NO. 1:

B. ALTERNATE NO. 2:

END OF SECTION

SECTION 01 2500

SUBSTITUTION PROCEDURES

PART 1 - GENERAL

1.1 SUMMARY

A. Section includes administrative and procedural requirements for substitutions.

1.2 DEFINITIONS

A. Substitutions: Changes in products, materials, equipment, and methods of construction from those required by the Contract Documents and proposed by Contractor.

1. Substitutions for Cause: Changes proposed by Contractor that are required due to changed Project conditions, such as unavailability of product, regulatory changes, or unavailability of required warranty terms.
2. Substitutions for Convenience: Changes proposed by Contractor or Owner that are not required in order to meet other Project requirements but may offer advantage to Contractor or Owner.

1.3 SUBMITTALS

A. Substitution Requests: Submit electronic copies of each request for consideration. Identify product or fabrication or installation method to be replaced. Include Specification Section number and title and Drawing numbers and titles.

1. Substitution Request Form: Use scanned PDF electronic file of form provided at end of this section or annotated PDF electronic file of electronic form received from Architect matching form provided at end of this section.
2. Documentation: Show compliance with requirements for substitutions and the following, as applicable:

a. Statement indicating why specified product or fabrication or installation cannot be provided, if applicable.
b. Coordination information, including a list of changes or revisions needed to other parts of the Work and to construction performed by Owner and separate contractors that will be necessary to accommodate proposed substitution.
c. Detailed comparison of significant qualities of proposed substitution with those of the Work specified. Include annotated copy of applicable Specification Section. Significant qualities may include attributes such as performance, weight, size, durability, visual effect, sustainable design characteristics, warranties, and specific features and requirements indicated. Indicate deviations, if any, from the Work specified.
d. Product Data, including drawings and descriptions of products and fabrication and installation procedures.
e. Samples, where applicable or requested.
f. Certificates and qualification data, where applicable or requested.
g. List of similar installations for completed projects with project names and addresses and names and addresses of architects and owners.
h. Material test reports from a qualified testing agency indicating and interpreting test results for compliance with requirements indicated.
i. Research reports evidencing compliance with building code in effect for Project, from ICC-ES.

j. Detailed comparison of Contractor's construction schedule using proposed substitution with products specified for the Work, including effect on the overall Contract Time. If specified product or method of construction cannot be provided within the Contract Time, include letter from manufacturer, on manufacturer's letterhead, stating date of receipt of purchase order, lack of availability, or delays in delivery.
k. Cost information, including a proposal of change, if any, in the Contract Sum.
l. Contractor's certification that proposed substitution complies with requirements in the Contract Documents except as indicated in substitution request, is compatible with related materials, and is appropriate for applications indicated.
m. Contractor's waiver of rights to additional payment or time that may subsequently become necessary because of failure of proposed substitution to produce indicated results.

3. Architect's Action: If necessary, with reasonable promptness, Architect will request additional information or documentation for evaluation. Architect will notify Contractor of acceptance or rejection of proposed substitution with reasonable promptness. Acceptance of proposed substitution does not constitute approval or inclusion in Contract Documents. Pay applications certification, change orders, and certificate of substantial completion will contain such qualification.

1.4 QUALITY ASSURANCE

A. Compatibility of Substitutions: Investigate and document compatibility of proposed substitution with related products and materials. Engage a qualified testing agency to perform compatibility tests recommended by manufacturers.

1.5 PROCEDURES

A. Coordination: Revise or adjust affected work as necessary to integrate work of the approved substitutions.

PART 2 - PRODUCTS

2.1 SUBSTITUTIONS

A. Prior to starting Substitution Process, review proposed recommendations with Architect.

B. Contractor's submittal and Architect's acceptance of Shop Drawings, Product Data or Samples for construction activities not complying with Contract Documents does not constitute acceptable or valid request for substitution, nor does it constitute approval.

C. Contractor Representations: By making substitution request, Contractor:

1. Recognizes burden of proof of equality for requested substitution rests with Contractor.
2. Represents and warrants that Contractor has personally investigated requested substitution and determined that it is equal to or superior in all respects to specified Work.
3. Represents and warrants that Contractor will provide same warranties for requested substitution that Contractor would for specified Work.
4. Certifies that cost data presented is complete and includes all related costs under this Contract except for Architect's redesign cost, and waives all claims for additional costs related to requested substitution which may subsequently become apparent.
5. Will coordinate installation of accepted substitution, making such other changes as may be required to make Work complete in all respects.

6. Represents and warrants that accepted substitution will perform same as specified Work would have performed. Should accepted substitution fail to perform as required, Contractor shall replace accepted substitution with specified Work at no additional cost to Owner.

D. Substitutions for Cause: Submit requests for substitution immediately on discovery of need for change.

1. Conditions: Architect will consider Contractor's request for substitution when the following conditions are satisfied. If the following conditions are not satisfied, Architect will return requests without action, except to record noncompliance with these requirements:

a. Requested substitution is consistent with the Contract Documents and will produce indicated results.
b. Requested substitution provides sustainable design characteristics that specified product provided.
c. Substitution request is fully documented and properly submitted.
d. Requested substitution will not adversely affect Contractor's construction schedule.
e. Requested substitution has received necessary approvals of authorities having jurisdiction.
f. Requested substitution is compatible with other portions of the Work.
g. Requested substitution has been coordinated with other portions of the Work.
h. Requested substitution provides specified warranty.

E. Substitutions for Convenience:

1. Conditions: Architect will consider Contractor's request for substitution when the following conditions are satisfied. If the following conditions are not satisfied, Architect will return requests without action, except to record noncompliance with these requirements:

a. Requested substitution offers Owner a substantial advantage in cost, time, energy conservation, or other considerations, after deducting additional responsibilities Owner must assume. Owner's additional responsibilities may include compensation to Architect for redesign and evaluation services, increased cost of other construction by Owner, and similar considerations.
b. Requested substitution does not require extensive revisions to the Contract Documents.
c. Requested substitution is consistent with the Contract Documents and will produce indicated results.
d. Requested substitution provides sustainable design characteristics that specified product provided.
e. Substitution request is fully documented and properly submitted.
f. Requested substitution will not adversely affect Contractor's construction schedule.
g. Requested substitution has received necessary approvals of authorities having jurisdiction.
h. Requested substitution is compatible with other portions of the Work.
i. Requested substitution has been coordinated with other portions of the Work.
j. Requested substitution provides specified warranty.

PART 3 - EXECUTION (Not Used)

END OF SECTION

Substitution Request Form 012500a

To Contract Manager _____

Project No. _____ Project Name _____

Specified Item

Section	Page	Paragraph	Description

The undersigned General Contractor requests consideration of the following:

Proposed Substitution _____

(Include all product data as indicated in Specification Section 01 2500 and any supplemental information as requested by the Architect.)

The undersigned General Contractor warrants to the Architect and Owner that the following paragraphs, unless modified on attachments, are correct.

1. The Proposed Substitution does not affect dimensions shown on Drawings.
2. The cost reduction/increase indicated in item 5 below includes costs for changes to the building design, including engineering, design, detailing and construction costs caused by the requested Substitution. Any additional costs resulting from this substitution will be reimbursed from the cost savings in item 5 or, in it's absence, funded as a project cost.
3. The Proposed Substitution will have no adverse affect on other trades, the construction schedule, or specified warranty requirements.
4. Maintenance and service parts will be locally available for the Proposed Substitution.

   The General Contractor further warrants to the Architect and Owner that the function and quality of the Proposed Substitution are equivalent or superior to the Specified Item. The General Contractor further warrants that specification section 01 2500, paragraph 2.1G intent has been met.

5. Total Cost Savings/Increase to the Owner: $_____
6. Compensation to the Architect / Consultant for related Additional Service Fee: $_____

Manufacturer's Certification of Equal Quality

I _____ represent the manufacturer of the Proposed Substitution item and hereby certify and warrant to the Architect and Owner that the function and quality of the Proposed Substitution are equivalent or superior to the Specified Item.

Manufacturer's Representative	Date	Company

Acceptances

1.

General Contractor Acceptance	Date	Company

2.

Owner Acceptance	Date	Company

3.

Architect Acceptance	Date	Company

Recommend Acceptance: ☐ ***Yes*** ☐ ***No***

SECTION 01 2900

PAYMENT PROCEDURES

PART 1 - GENERAL

1.1 SUMMARY

A. Section includes administrative and procedural requirements necessary to prepare and process Applications for Payment.

1.2 SCHEDULE OF VALUES

A. Coordination: Coordinate preparation of the schedule of values with preparation of Contractor's construction schedule.

1. Coordinate line items in the schedule of values with other required administrative forms and schedules, including the following:

    a. Application for Payment forms with continuation sheets.
    b. Submittal schedule.
    c. Accepted Alternates.

2. Submit the schedule of values to Architect at earliest possible date, but no later than seven days before the date scheduled for submittal of initial Applications for Payment.
3. Subschedules for Phased Work: Where the Work is separated into phases requiring separately phased payments; provide subschedules showing values coordinated with each phase of payment.
4. Subschedules for Separate Elements of Work: Where the Contractor's construction schedule defines separate elements of the Work; provide subschedules showing values coordinated with each element.
5. Subschedules for Separate Design Contracts: Where the Owner has retained design professionals under separate contracts who will each provide certification of payment requests, provide subschedules showing values coordinated with the scope of each design services contract as described in Division 01 Section "Summary."

B. Format and Content: Use Project Manual table of contents as a guide to establish line items for the schedule of values. Provide at least one line item for each Specification Section.

1. Identification: Include the following Project identification on the schedule of values:

    a. Project name and location.
    b. Name of Architect.
    c. Architect's project number.
    d. Contractor's name and address.
    e. Date of submittal.

2. Arrange the schedule of values in tabular form, in format accepted by Architect, with separate columns to indicate the following for each item listed:

    a. Related Specification Section or Division.

b. Description of the Work.
c. Name of subcontractor.
d. Name of manufacturer or fabricator.
e. Name of supplier.
f. Change Orders.
g. Dollar value of the following, as a percentage of the Contract Sum to nearest one-hundredth percent, adjusted to total 100 percent.

1) Labor.
2) Materials.
3) Equipment.

3. Provide a breakdown of the Contract Sum in enough detail to facilitate continued evaluation of Applications for Payment and progress reports. Coordinate with Project Manual table of contents. Provide multiple line items for principal subcontract amounts, where appropriate.
4. Round amounts to nearest whole dollar; total shall equal the Contract Sum.
5. Provide a separate line item in the schedule of values for each part of the Work where Applications for Payment may include materials or equipment purchased or fabricated and stored, but not yet installed.

a. Differentiate between items stored on-site and items stored off-site. If required, include evidence of insurance or bonded warehousing.

6. Provide separate line items in the schedule of values for initial cost of materials, for each subsequent stage of completion, and for total installed value of that part of the Work.
7. Allowances (If Applicable): Provide a separate line item in the schedule of values for each allowance. Show line-item value of unit-cost allowances (if applicable), as a product of the unit cost, multiplied by measured quantity. Use information indicated in the Contract Documents to determine quantities.
8. Alternates (If Applicable): Provide a separate line item in the schedule of values for each accepted alternate.
9. Change Orders: Provide a separate line item in the schedule of values for each change order.
10. Separate Owner-Consultant Contracts: Provide a separate line item in the schedule of values for each separate Owner-Consultant related Work item.
11. Purchase Contracts: When applicable, provide a separate line item in the schedule of values for each purchase contract. Show line-item value of purchase contract. Indicate owner payments or deposits, if any, and balance to be paid by Contractor.
12. Each item in the schedule of values and Applications for Payment shall be complete. Include total cost and proportionate share of general overhead and profit for each item.

a. Temporary facilities and other major cost items that are not direct cost of actual work-in-place may be shown either as separate line items in the schedule of values or distributed as general overhead expense, at Contractor's option.

13. Schedule Updating: Update and resubmit the schedule of values before the next Applications for Payment when Change Orders or Construction Change Directives result in a change in the Contract Sum.

1.3 ARCHITECTS COST DATA

A. In addition to the Schedule of Values, submit itemized cost data reporting on Architect's Form HKS-757 "Project Cost Summary"; copy attached at the end of this Section. Initial submission shall be included with contractors first Application for Payment. Final updated submission shall be included with contractors final Application for Payment.

1.4 APPLICATIONS FOR PAYMENT

A. Each Application for Payment following the initial Application for Payment shall be consistent with previous applications and payments as certified by Architect and paid for by Owner.

1. Initial Application for Payment, Application for Payment at time of Substantial Completion, and final Application for Payment involve additional requirements.

B. Payment Application Times: The date for each progress payment is indicated in the Agreement between Owner and Contractor. The period of construction work covered by each Application for Payment is the period indicated in the Agreement.

1. If the Agreement does not state payment dates, establish dates at preconstruction conference.
2. Submit draft, or pencil, copy of Application for Payment seven days prior to due date for review by Architect.

C. Application for Payment Forms: Unless directed otherwise by Owner, use AIA Document G702 and AIA Document G703 as form for Applications for Payment.

D. Application Preparation: Complete every entry on form. Notarize and execute by a person authorized to sign legal documents on behalf of Contractor. Architect will return incomplete applications without action.

1. Entries shall match data on the schedule of values and Contractor's construction schedule. Use updated schedules if revisions were made.
2. Include amounts of Change Orders and Construction Change Directives issued before last day of construction period covered by application.

E. Stored Materials: If accepted by Owner, include in Application for Payment amounts applied for materials or equipment purchased or fabricated and stored, but not yet installed. Differentiate between items stored on-site and items stored off-site.

1. Provide certificate of insurance, evidence of transfer of title to Owner, and consent of surety to payment, for stored materials.
2. Provide supporting documentation that verifies amount requested, such as paid invoices. Match amount requested with amounts indicated on documentation; do not include overhead and profit on stored materials.
3. Provide summary documentation for stored materials indicating the following:

    a. Value of materials previously stored and remaining stored as of date of previous Applications for Payment.
    b. Value of previously stored materials put in place after date of previous Application for Payment and on or before date of current Application for Payment.
    c. Value of materials stored since date of previous Application for Payment and remaining stored as of date of current Application for Payment.

F. Transmittal: Submit 3 signed and notarized original copies of each Application for Payment to Architect by a method ensuring receipt within 24 hours. One copy shall include waivers of lien and similar attachments if required.

1. Transmit each copy with a transmittal form listing attachments and recording appropriate information about application.

G. Waivers of Mechanic's Lien: With each Application for Payment, submit waivers of mechanic's liens from General Contractor, subcontractors, sub-subcontractors, and suppliers for construction period covered by the previous application.

1. Submit partial waivers on each item for amount requested in previous application, after deduction for retainage, on each item.
2. When an application shows completion of an item, submit conditional final or full waivers.
3. Owner reserves the right to designate which entities involved in the Work must submit waivers.
4. Waiver Delays: Submit each Application for Payment with Contractor's waiver of mechanic's lien for construction period covered by the application.

    a. Submit final Application for Payment with or preceded by conditional final waivers from every entity involved with performance of the Work covered by the application who is lawfully entitled to a lien.

5. Waiver Forms: Submit executed waivers of lien on forms, acceptable to Owner.

H. Initial Application for Payment: Administrative actions and submittals that must precede or coincide with submittal of first Application for Payment include the following:

1. List of subcontractors.
2. Schedule of values.
3. Contractor's construction schedule (preliminary if not final).
4. Products list (preliminary if not final).
5. Schedule of unit prices.
6. Submittal schedule (preliminary if not final).
7. List of Contractor's staff assignments.
8. List of Contractor's principal consultants.
9. Copies of building permits.
10. Copies of authorizations and licenses from authorities having jurisdiction for performance of the Work.
11. Initial progress report.
12. Report of preconstruction conference.
13. Certificates of insurance and insurance policies.
14. Performance and payment bonds.

I. Application for Payment at Substantial Completion: After Architect issues the Certificate of Substantial Completion, submit an Application for Payment showing 100 percent completion for portion of the Work claimed as substantially complete.

1. Include documentation supporting claim that the Work is substantially complete and a statement showing an accounting of changes to the Contract Sum.
2. When applicable, this application shall reflect Certificate(s) of Partial Substantial Completion issued previously for Owner occupancy of designated portions of the Work.

J. Final Payment Application: Submit final Application for Payment with releases and supporting documentation not previously submitted and accepted, including, but not limited, to the following:

1. Evidence of completion of Project closeout requirements.
2. Insurance certificates for products and completed operations where required and proof that taxes, fees, and similar obligations were paid.
3. Updated final statement, accounting for final changes to the Contract Sum.
4. AIA Document G706, "Contractor's Affidavit of Payment of Debts and Claims."
5. AIA Document G706A, "Contractor's Affidavit of Release of Liens."
6. AIA Document G707, "Consent of Surety to Final Payment."
7. Evidence that claims have been settled.
8. Final meter readings for utilities, a measured record of stored fuel, and similar data as of date of Substantial Completion or when Owner took possession of and assumed responsibility for corresponding elements of the Work.
9. If applicable, final liquidated damages settlement statement.

PART 2 - PRODUCTS (Not Used)

PART 3 - EXECUTION (Not Used)

END OF SECTION

SECTION 01 2600

CONTRACT MODIFICATION PROCEDURES

PART 1 - GENERAL

1.1 SUMMARY

A. Section includes administrative and procedural requirements for handling and processing Contract modifications.

1.2 MINOR CHANGES IN THE WORK

A. Architect will issue supplemental instructions authorizing minor changes in the Work, not involving adjustment to the Contract Sum or the Contract Time, on Architect's Form HKS-710 "Architect's Supplemental Instructions"; copy attached at the end of this Section.

1.3 PROPOSAL REQUESTS

A. Owner-Initiated Proposed Change: Architect will issue a detailed description of proposed changes in the Work that may require adjustment to the Contract Sum or the Contract Time using Architect's Form HKS-709 "Proposed Change"; copy attached at the end of this Section. If necessary, the description will include supplemental or revised Drawings and Specifications.

1. Proposed Changes issued by Architect are not instructions either to stop work in progress or to execute the proposed change.
2. Within time specified in Proposed Change or with reasonable promptness, when not otherwise specified, after receipt of Proposed Change, submit a quotation estimating cost adjustments to the Contract Sum and the Contract Time necessary to execute the change.

    a. Include a list of quantities of products required or eliminated and unit costs, with total amount of purchases and credits to be made. If requested, furnish survey data to substantiate quantities.
    b. Indicate applicable taxes, delivery charges, equipment rental, and amounts of trade discounts.
    c. Include costs of labor and supervision directly attributable to the change.
    d. Include an updated Contractor's construction schedule that indicates the effect of the change, including, but not limited to, changes in activity duration, start and finish times, and activity relationship. Use available total float before requesting an extension of the Contract Time.
    e. Include updated Submittal Schedule showing effect of the change.

B. Contractor-Initiated Proposed Change: If latent or changed conditions require modifications to the Contract, Contractor may initiate a claim by submitting a request for a change to Architect using Contractor's Standard Form.

1. Include a statement outlining reasons for the change and the effect of the change on the Work. Provide a complete description of the proposed change. Indicate the effect of the proposed change on the Contract Sum and the Contract Time.

2. Include a list of quantities of products required or eliminated and unit costs, with total amount of purchases and credits to be made. If requested, furnish survey data to substantiate quantities.
3. Indicate applicable taxes, delivery charges, equipment rental, and amounts of trade discounts.
4. Include costs of labor and supervision directly attributable to the change.
5. Include an updated Contractor's construction schedule that indicates the effect of the change, including, but not limited to, changes in activity duration, start and finish times, and activity relationship. Use available total float before requesting an extension of the Contract Time.
6. Include updated Submittal Schedule showing effect of the change.
7. Comply with requirements in Division 01 Section "Substitution Procedures" if the proposed change requires substitution of one product or system for product or system specified.

1.4 ADMINISTRATIVE CHANGE ORDERS

A. Allowance Adjustment: If applicable, see Division 01 Section "Allowances" for administrative procedures for preparation of Proposed Change for adjusting the Contract Sum to reflect actual costs of allowances.

B. Unit-Price Adjustment: If applicable, see Division 01 Section "Unit Prices" for administrative procedures for preparation of Proposed Change for adjusting the Contract Sum to reflect measured scope of unit-price work.

C. Alternates: If applicable, see Division 01 Section "Alternates" for administrative procedures for preparation of Proposed Change for adjusting the Contract Sum to reflect measured scope of alternate work.

1.5 CHANGE ORDER PROCEDURES

A. On Owner's approval of a Proposed Change, Architect will issue a Change Order for signatures of Owner and Contractor on Architects Form HKS-701 "Change Order"; copy attached at the end of this Section.

1.6 CONSTRUCTION CHANGE DIRECTIVE

A. Construction Change Directive: Architect may issue a Construction Change Directive on Architects Form HKS-714 "Construction Change Directive"; copy attached at the end of this Section. Construction Change Directive instructs Contractor to proceed with a change in the Work, for subsequent inclusion in a Change Order.

1. Construction Change Directive contains a complete description of change in the Work. It also designates method to be followed to determine change in the Contract Sum or the Contract Time.

B. Documentation: Maintain detailed records on a time and material basis of work required by the Construction Change Directive.

1. After completion of change, submit an itemized account and supporting data necessary to substantiate cost and time adjustments to the Contract.

PART 2 - PRODUCTS (Not Used)

PART 3 - EXECUTION (Not Used)

END OF SECTION

SECTION 01 3100

PROJECT MANAGEMENT AND COORDINATION

PART 1 - GENERAL

1.1 SUMMARY

A. Section includes administrative provisions for coordinating construction operations on Project including, but not limited to, the following:

1. General coordination procedures.
2. Coordination drawings.
3. Requests for Information (RFIs).
4. Project Web site.
5. Project meetings.

1.2 DEFINITIONS

A. Project communications documents shall be defined as the following:

1. Letters.
2. Memoranda.
3. E-Mail Communications/Internet Communications/Project Management Software Communications.
4. RFI (Request for Information - Contractor).
5. RFI-A (Request for Information - Architect).

1.3 FORMAT

A. Letters and Memoranda: Submit in formats acceptable to the Architect.

B. E–Mail Communications/Internet Communications/Project Management Software Communications: Submit in forms and formats acceptable to and as approved by the Architect.

C. RFI (Request for Information - Contractor): Submit on forms furnished by the Architect, or on other forms as approved by the Architect. Unless otherwise approved use Architect's Form HKS-750, "Request for Information"; copy attached at the end of this Section.

D. RFI-A (Request for Information - Architect), will be submitted by Architect to Contractor on Architects standard form.

1.4 PROJECT COMMUNICATIONS DOCUMENTS

A. Letters and Memoranda documents shall be submitted in a timely manner so as to facilitate project delivery and coordination. Routing of communications shall be as established in the Contract, the Contract Documents and the Pre-Construction Conference. Communications documents shall be transmitted or forwarded in a manner consistent with the schedule and progress of the work.

B. E–Mail Communications, Internet Communications, and Project Management Software programs must be compatible with the Architect's and Owner's computer systems and equipment. The responsibility for all costs for management of these systems, including, but not limited to, licensing, onsite training or other training necessary for the proper operation of such systems, shall be by the Contractor. The Contractor shall keep written records and hard file copies of all electronic communications. Failure of the Contractor to keep such records shall waive the Contractor's right to rely on such communications and such communications shall be deemed to have not taken place.

C. RFI (Request for Information - Contractor) shall be defined and limited to a request from the Contractor seeking interpretation or clarification of the requirements of the Contract Documents. Such requests shall comply with the following requirements:

1. RFI requests shall be submitted in a timely manner, well in advance of related work, and allow sufficient time for the resolution of issues relating to the request for interpretation or clarification. Contractor shall schedule the submission of RFI's so as to moderate and manage the flow of RFI requests. RFI's shall be submitted in a manner consistent with the schedule and progress of the work, and shall not be submitted in a sporadic and/or excessive manner.
2. RFI requests shall be numbered in a sequential manner and contain a detailed description of the areas of work requiring interpretation or clarification. Include drawing and specification references, sketches, technical data, brochures, or other supporting data as deemed necessary by the Architect, for the Architect to provide the interpretations and clarifications requested.

    a. The Contractor shall include a "Proposed Solution" to the issue requiring interpretation or clarification.

3. RFI's submitted to the Contractor by Sub-Contractors, vendors, suppliers, or other parties to the work shall be reviewed by the Contractor prior to submission to the Architect. If the Architect deems that such RFI requests have not been adequately reviewed by the Contractor, such requests will be returned to the Contractor for further action. Sub-Contractor's RFI shall contain a "Proposed Solution".
4. RFI requests shall not contain submittals, substitutions requests, routine communications, correspondence, memos, claims, or any information required by other areas of the Contract Documents. RFI requests containing such information will be returned to the Contractor without action by the Architect.
5. RFI requests are limited to a request for interpretation or clarification of the requirements of the Contract Documents. Interpretations provided by the Architect shall not change the requirements of the Contract or the Contract Documents. If the Contractor determines that the Architect's response to an RFI gives cause for a change in the Contract or the Contract Documents, the Contractor shall promptly, within 5 working days, give written notice to the Architect of request for adjustments. Requests for adjustments to the Contract shall be submitted in a manner consistent with the terms and conditions of the Contract Documents.
6. If the Architect, after review, determines that any RFI has been submitted in an incomplete manner, is unnecessary, or does not otherwise comply with the requirements of this Section, the RFI will be returned without action to the Contractor. The Contractor shall delete the original submittal date from the RFI log and enter a new submittal date at the time of re-submittal.
7. RFI Log: Prepare, maintain, and submit a tabular log of RFIs organized by the RFI number. Submit log weekly. Use software log that is part of Project Web site. Software log with not less than the following:

a. Project name.
b. Name and address of Contractor.
c. Name and address of Architect.
d. RFI number including RFIs that were returned without action or withdrawn.
e. RFI description.
f. Date the RFI was submitted.
g. Date Architect's response was received.

8. On receipt of Architect's action, update the RFI log and immediately distribute the RFI response to affected parties. Review response and notify Architect within seven days if Contractor disagrees with response.

a. Identification of related Minor Change in the Work, Construction Change Directive, and Proposal Request, as appropriate.

D. RFI-A (Request for Information - Architect) shall be defined as a request by the Architect for information relating to the obligations of the Contractor under the Contract.

1. After receipt of an RFI-A the Contractor shall provide a written response to the Architect within 5 working days. Responses shall be thorough, complete and shall contain all information requested by the Architect.
2. An RFI-A shall be limited to a request by the Architect for information related to the project. The RFI-A shall not be construed as authorizing or directing a change in the Contract or the Contract Documents.

E. Revisions to Construction Documents: Responses to requests for information (RFI) shall not serve as construction documents; and the Contractor shall not incorporate RFI responses into construction of the Project, unless such answers bear the seal and signature of a licensed design professional.

1.5 INFORMATIONAL SUBMITTALS

A. Subcontract List: Prepare a written summary identifying individuals or firms proposed for each portion of the Work, including those who are to furnish products or equipment fabricated to a special design. Include the following information in tabular form:

1. Name, address, and telephone number of entity performing subcontract or supplying products.
2. Number and title of related Specification Section(s) covered by subcontract.
3. Drawing number and detail references, as appropriate, covered by subcontract.

B. Key Personnel Names: Within 15 days of starting construction operations, submit a list of key personnel assignments, including superintendent and other personnel in attendance at Project site. Identify individuals and their duties and responsibilities; list addresses and telephone numbers, including home, office, and cellular telephone numbers and e-mail addresses. Provide names, addresses, and telephone numbers of individuals assigned as alternates in the absence of individuals assigned to Project.

1. Post copies of list in project meeting room, in temporary field office, and Project Web site. Keep list current at all times.

1.6 GENERAL COORDINATION PROCEDURES

A. Coordination: Coordinate construction operations included in different Sections of the Specifications to ensure efficient and orderly installation of each part of the Work. Coordinate construction operations, included in different Sections, that depend on each other for proper installation, connection, and operation.

1. Schedule construction operations in sequence required to obtain the best results where installation of one part of the Work depends on installation of other components, before or after its own installation.
2. Coordinate installation of different components to ensure maximum performance and accessibility for required maintenance, service, and repair.
3. Make adequate provisions to accommodate items scheduled for later installation.

B. Prepare memoranda for distribution to each party involved, outlining special procedures required for coordination. Include such items as required notices, reports, and list of attendees at meetings.

1. Prepare similar memoranda for Owner and separate contractors if coordination of their Work is required.

C. Administrative Procedures: Coordinate scheduling and timing of required administrative procedures with other construction activities to avoid conflicts and to ensure orderly progress of the Work. Such administrative activities include, but are not limited to, the following:

1. Preparation of Contractor's construction schedule.
2. Preparation of the schedule of values.
3. Installation and removal of temporary facilities and controls.
4. Delivery and processing of submittals.
5. Progress meetings.
6. Preinstallation conferences.
7. Project closeout activities.
8. Startup and adjustment of systems.

D. Conservation: Coordinate construction activities to ensure that operations are carried out with consideration given to conservation of energy, water, and materials.

1.7 COORDINATION DRAWINGS

A. Coordination Drawings, General: Prepare coordination drawings according to requirements in individual Sections, and additionally where installation is not completely shown on Shop Drawings, where limited space availability necessitates coordination, or if coordination is required to facilitate integration of products and materials fabricated or installed by more than one entity.

1. Content: Project-specific information, drawn accurately to a scale large enough to indicate and resolve conflicts. Do not base coordination drawings on standard printed data. Include the following information, as applicable:

a. Use applicable Drawings as a basis for preparation of coordination drawings. Prepare sections, elevations, and details as needed to describe relationship of various systems and components.
b. Indicate functional and spatial relationships of components of architectural, structural, civil, mechanical, and electrical systems.

c. Indicate space requirements for routine maintenance and for anticipated replacement of components during the life of the installation.
d. Show location and size of access doors required for access to concealed dampers, valves, and other controls.
e. Indicate required installation sequences.
f. Indicate dimensions shown on the Drawings. Specifically note dimensions that appear to be in conflict with submitted equipment and minimum clearance requirements. Provide alternate sketches to Architect indicating proposed resolution of such conflicts. Minor dimension changes and difficult installations will not be considered changes to the Contract.

B. Coordination Digital Data Files: Prepare coordination digital data files according to the following requirements:

1. File Preparation Format: Same digital data software program, version, and operating system as original Drawings.
2. File Submittal Format: Submit or post coordination drawing files using Portable Data File (PDF) format.
3. BIM File Incorporation: When applicable, develop coordination drawing files from Building Information Model (BIM) established for Project.

a. Perform three-dimensional component conflict analysis as part of preparation of coordination drawings. Resolve component conflicts prior to submittal. Indicate where conflict resolution requires modification of design requirements by Architect.

4. If approved by Owner, Architect will furnish Contractor one set of digital data files of Drawings for use in preparing coordination digital data files.

a. Architect makes no representations as to the accuracy or completeness of digital data files as they relate to Drawings.
b. Digital Data Software Program: Drawings are available in Autodesk Revit and/or Autocad; and compatible with Microsoft Windows operating system.
c. Distribution: Digital data files shall only be distributed via the HKS Thru site with acceptance of HKS data licensing agreement.

1.8 PROJECT WEB SITE

A. Use Architect's Project Web site implementing Architect's electronic project management software system for purposes of managing project communication and documentation until Final Completion.

B. Contractor, subcontractors, and other parties granted access to Project Web site shall execute a data licensing agreement in the form of AIA Document C106.

1.9 PROJECT MEETINGS

A. General: Schedule and conduct meetings and conferences at Project site unless otherwise indicated.

1. Attendees: Inform participants and others involved, and individuals whose presence is required, of date and time of each meeting. Notify Owner and Architect of scheduled meeting dates and times.

2. Agenda: Prepare the meeting agenda. Distribute the agenda to all invited attendees.
3. Minutes: Record significant discussions and agreements achieved. Distribute the meeting minutes to everyone concerned, including Owner and Architect, within 3 days of the meeting.
4. Attendance: Document attendance of all participants.

B. Preconstruction Conference: Architect will schedule and conduct a preconstruction conference before starting construction.

1. Conduct the conference to review responsibilities and personnel assignments.
2. Attendees: Authorized representatives of Owner, Architect, and their consultants; Contractor and its superintendent; major subcontractors; suppliers; and other concerned parties shall attend the conference. Participants at the conference shall be familiar with Project and authorized to conclude matters relating to the Work.

C. Preinstallation Conferences: Conduct a preinstallation conference at Project site before each construction activity that requires coordination with other construction.

1. Attendees: Installer and representatives of manufacturers and fabricators involved in or affected by the installation and its coordination or integration with other materials and installations that have preceded or will follow, shall attend the meeting. Advise Architect of scheduled meeting dates.
2. Agenda: Review progress of other construction activities and preparations for the particular activity under consideration, and coordination with adjacent activities. Prepare agenda appropriate to Work.
3. Record significant conference discussions, agreements, and disagreements, including required corrective measures and actions.
4. Reporting: Distribute minutes of the meeting to each party present and to other parties requiring information.
5. Do not proceed with installation if the conference cannot be successfully concluded. Initiate whatever actions are necessary to resolve impediments to performance of the Work and reconvene the conference at earliest feasible date.

D. Project Closeout Conference: Schedule and conduct a project closeout conference, at a time convenient to Owner and Architect, at a time to be decided prior to the scheduled date of Substantial Completion.

1. Conduct the conference to review requirements and responsibilities related to Project closeout.
2. Attendees: Authorized representatives of Owner, Architect, and their consultants; Contractor and its superintendent; major subcontractors; suppliers; and other concerned parties shall attend the meeting. Participants at the meeting shall be familiar with Project and authorized to conclude matters relating to the Work.
3. Agenda: Discuss items of significance that could affect or delay Project closeout, including the following:

    a. Preparation of record documents.
    b. Procedures required prior to inspection for Substantial Completion and for final inspection for acceptance.
    c. Submittal of written warranties.
    d. If applicable, requirements for completing sustainable design documentation.
    e. Requirements for preparing operations and maintenance data.

f. Requirements for delivery of material samples, attic stock, and spare parts.
g. Requirements for demonstration and training.
h. Preparation of Contractor's punch list.
i. Procedures for processing Applications for Payment at Substantial Completion and for final payment.
j. Submittal procedures.
k. If applicable, coordination of separate contracts.
l. If applicable, Owner's partial occupancy requirements.
m. Installation of Owner's furniture, fixtures, and equipment.
n. Responsibility for removing temporary facilities and controls.

4. Minutes: Entity conducting meeting will record and distribute meeting minutes.

E. Progress Meetings: Conduct progress meetings at regular intervals.

1. Coordinate dates of meetings with preparation of payment requests.
2. Attendees: In addition to representatives of Owner and Architect, each contractor, subcontractor, supplier, and other entity concerned with current progress or involved in planning, coordination, or performance of future activities shall be represented at these meetings. All participants at the meeting shall be familiar with Project and authorized to conclude matters relating to the Work.
3. Agenda: Review and correct or approve minutes of previous progress meeting. Review other items of significance that could affect progress. Include topics for discussion as appropriate to status of Project.

a. Contractor's Construction Schedule: Review progress since the last meeting. Determine whether each activity is on time, ahead of schedule, or behind schedule, in relation to Contractor's construction schedule. Determine how construction behind schedule will be expedited; secure commitments from parties involved to do so. Discuss whether schedule revisions are required to ensure that current and subsequent activities will be completed within the Contract Time.

1) Review schedule for next period.

b. Review present and future needs of each entity present, including the following or as needed:

1) Interface requirements.
2) Sequence of operations.
3) If applicable, resolution of BIM component conflicts.
4) Status of submittals.
5) If applicable, status of sustainable design documentation.
6) Deliveries.
7) Off-site fabrication.
8) Access.
9) Site utilization.
10) Temporary facilities and controls.
11) Work hours.
12) Hazards and risks.
13) Progress cleaning.
14) Quality and work standards.
15) Status of correction of deficient items.

16) Field observations.
17) Status of RFIs.
18) Status of proposal requests.
19) Pending changes.
20) Status of Change Orders.
21) Documentation of information for payment requests.

4. Minutes: Entity responsible for conducting the meeting will record and distribute the meeting minutes to each party present and to parties requiring information.

a. Schedule Updating: Revise Contractor's construction schedule after each progress meeting where revisions to the schedule have been made or recognized. Issue revised schedule concurrently with the report of each meeting.

F. Coordination Meetings: Conduct Project coordination meetings on an as-needed basis. Project coordination meetings are in addition to specific meetings held for other purposes, such as progress meetings and preinstallation conferences.

1. Attendees: Each contractor, subcontractor, supplier, and other entity concerned with current progress or involved in planning, coordination, or performance of future activities shall be represented at these meetings. All participants at the meetings shall be familiar with Project and authorized to conclude matters relating to the Work.
2. Agenda: Review items of significance that could affect progress. Include topics for discussion as appropriate to status of Project.

a. Review present and future needs of each contractor present, including the following:

1) Interface requirements.
2) Sequence of operations.
3) If applicable, resolution of BIM component conflicts.
4) Status of submittals.
5) Deliveries.
6) Off-site fabrication.
7) Access.
8) Site utilization.
9) Temporary facilities and controls.
10) Work hours.
11) Hazards and risks.
12) Progress cleaning.
13) Quality and work standards.
14) Change Orders.

PART 2 - PRODUCTS

2.1 ELECTRONIC PROJECT MANAGEMENT SOFTWARE

A. General: So as to expedite electronic review process, process all documents through a web-based software service. Sending documents via email, FTP or paper will not be accepted.

1. Basis of Design (Product Standard):

a. Newforma, Inc.; Newforma Project Cloud, web-based software.

1) Website: www.NewformaProjectCloud.com
2) E-mail: projectcloud@newforma.com
3) Phone: (800) 303-4650

B. Performance Requirements:

1. Project License:

a. Cloud based (no hardware required).
b. Unlimited user accounts.
c. Functionality to support subcontractors, contractors, architects and consultants.
d. Provide access to data for all project team members at no cost to the individual users.

2. Training and Support:

a. Dedicated project training.
b. Phone support.

3. Archive:

a. Export all data to an offline archive at the completion of the project.
b. Provide archive to architect, contractor and owner.
c. Archive shall include all attachments, meta data, review comments and time stamp history.

4. Submittals and RFIs:

a. Customizable logs and reporting accessible by all users.
b. Logs shall automatically update as submittals and RFIs are processed.
c. Automated routing of submittals and RFIs to design team based on trade.
d. Automated email notifications when submittal or RFI has been assigned or returned to a user.
e. Automated weekly email to design team users of overdue items.
f. Automatic sequential numbering per spec section for submittals.
g. Two sets of due dates - one overall due date and a consultant due date.
h. Built-in web-based markup tools to support a concurrent review of submittal and RFI.

5. Submittal Register:

a. Software vendor shall take specifications and build the required list of submittals and import into the software.

6. Drawing Management:

a. Provide current set of drawings and specifications through a centralized index.
b. Automated association of PDFs to the centralized index.
c. Manage drawing revisions with customizable review states.
d. Drawings shall be accessible offline via mobile devices.

7. File Sharing:

    a. Integrated file sharing tool (FTP) to transfer any miscellaneous files such as BIM and CAD files.
    b. Access permissions (view/edit) at a folder level.

8. Punch List and other Field Task Management:

    a. Unlimited customizable field task types including punch list.
    b. Locate and assign tasks from a mobile device.
    c. No additional fees to individual users to access mobile apps.
    d. Data shall be accessible offline on mobile devices.

PART 3 - EXECUTION (Not Used)

END OF SECTION

SECTION 01 3200

CONSTRUCTION PROGRESS DOCUMENTATION

PART 1 - GENERAL

1.1 SUMMARY

A. Section includes administrative and procedural requirements for documenting the progress of construction during performance of the Work.

1.2 DEFINITIONS

A. Activity: A discrete part of a project that can be identified for planning, scheduling, monitoring, and controlling the construction project. Activities included in a construction schedule consume time and resources.

1. Critical Activity: An activity on the critical path that must start and finish on the planned early start and finish times.
2. Predecessor Activity: An activity that precedes another activity in the network.
3. Successor Activity: An activity that follows another activity in the network.

B. Major Area: A story of construction, a separate building, or a similar significant construction element.

C. Milestone: A key or critical point in time for reference or measurement.

D. CPM: Critical path method, which is a method of planning and scheduling a construction project where activities are arranged based on activity relationships. Network calculations determine when activities can be performed and the critical path of Project.

E. Critical Path: The longest connected chain of interdependent activities through the network schedule that establishes the minimum overall Project duration and contains no float.

F. Network Diagram: A graphic diagram of a network schedule, showing activities and activity relationships.

G. Event: The starting or ending point of an activity.

H. Float: The measure of leeway in starting and completing an activity.

1. Float time is not for the exclusive use or benefit of either Owner or Contractor, but is a jointly owned, expiring Project resource available to both parties as needed to meet schedule milestones and Contract completion date.
2. Free float is the amount of time an activity can be delayed without adversely affecting the early start of the successor activity.
3. Total float is the measure of leeway in starting or completing an activity without adversely affecting the planned Project completion date.

I. Fragnet: A partial or fragmentary network that breaks down activities into smaller activities for greater detail.

1.3 SUBMITTALS

A. Format for Submittals: Submit required submittals in the following format:

1. PDF electronic file.

B. Startup construction schedule.

C. Startup Network Diagram: Of size required to display entire network for entire construction period. Show logic ties for activities.

D. Contractor's Construction Schedule: Initial schedule, of size required to display entire schedule for entire construction period.

E. CPM Reports: Concurrent with CPM schedule, submit each of the following reports. Format for each activity in reports shall contain activity number, activity description, original duration, remaining duration, early start date, early finish date, late start date, late finish date, and total float in calendar days.

1. Activity Report: List of all activities sorted by activity number and then early start date, or actual start date if known.
2. Logic Report: List of preceding and succeeding activities for all activities, sorted in ascending order by activity number and then early start date, or actual start date if known.
3. Total Float Report: List of all activities sorted in ascending order of total float.
4. Earnings Report: Compilation of Contractor's total earnings from the Notice to Proceed until most recent Application for Payment.

F. Construction Schedule Updating Reports: Submit with Applications for Payment.

G. Daily Construction Reports: Submit at weekly intervals.

H. Material Location Reports: Submit at monthly intervals.

I. Site Condition Reports: Submit at time of discovery of differing conditions.

J. Special Reports: Submit at time of unusual event.

1.4 COORDINATION

A. Coordinate preparation and processing of schedules and reports with performance of construction activities and with scheduling and reporting of separate contractors.

B. Coordinate Contractor's construction schedule with the schedule of values, list of subcontracts, submittal schedule, progress reports, payment requests, and other required schedules and reports.

1. Secure time commitments for performing critical elements of the Work from entities involved.
2. Coordinate each construction activity in the network with other activities and schedule them in proper sequence.

PART 2 - PRODUCTS

2.1 CONTRACTOR'S CONSTRUCTION SCHEDULE, GENERAL

A. Time Frame: Extend schedule from date established for the Notice to Proceed to date of final completion.

1. Contract completion date shall not be changed by submission of a schedule that shows an early completion date, unless specifically authorized by Change Order.

B. Activities: Treat each story or separate area as a separate numbered activity for each main element of the Work. Comply with the following:

1. Procurement Activities: Include procurement process activities for the following long lead items and major items, requiring a cycle of more than 60 days, as separate activities in schedule. Procurement cycle activities include, but are not limited to, submittals, approvals, purchasing, fabrication, and delivery.
2. Submittal Review Time: Include review and resubmittal times indicated in Division 01 Section "Submittal Procedures" in schedule. Coordinate submittal review times in Contractor's construction schedule with submittal schedule.
3. Startup and Testing Time: Include no fewer than 7 days for startup and testing.
4. Substantial Completion: Indicate completion in advance of date established for Substantial Completion, and allow time for Architect's administrative procedures necessary for certification of Substantial Completion.
5. Punch List and Final Completion: Include not more than 30 days for completion of punch list items and final completion.

C. Constraints: Include constraints and work restrictions indicated in the Contract Documents and as follows in schedule (where applicable), and show how the sequence of the Work is affected.

1. Phasing: Arrange list of activities on schedule by phase.
2. Work by Owner: Include a separate activity for each portion of the Work performed by Owner.
3. Products Ordered in Advance: Include a separate activity for each product.
4. Owner-Furnished Products: Include a separate activity for each product.
5. Work Restrictions: Show the effect of the following items on the schedule:

    a. Coordination with existing construction.
    b. Limitations of continued occupancies.
    c. Uninterruptible services.
    d. Partial occupancy before Substantial Completion.
    e. Use of premises restrictions.
    f. Provisions for future construction.
    g. Seasonal variations.
    h. Environmental control.

6. Work Stages: Indicate important stages of construction for each major portion of the Work, including, but not limited to, the following:

    a. Subcontract awards.
    b. Submittals.
    c. Purchases.
    d. Mockups.
    e. Fabrication.

f. Sample testing.
g. Deliveries.
h. Installation.
i. Tests and inspections.
j. Adjusting.
k. Curing.
l. Building flush-out.
m. Startup and placement into final use and operation.

7. Construction Areas: Identify each major area of construction for each major portion of the Work. Indicate where each construction activity within a major area must be sequenced or integrated with other construction activities to provide for the following:

a. Structural completion.
b. Temporary enclosure and space conditioning.
c. Permanent space enclosure.
d. Completion of mechanical installation.
e. Completion of electrical installation.
f. Substantial Completion.

8. Other Constraints include but are not limited to the following:

a. Roads.
b. Parking.
c. Landscape.

D. Milestones: Include milestones indicated in the Contract Documents in schedule, including, but not limited to, the Notice to Proceed, punch list activities, Substantial Completion, and final completion.

E. Recovery Schedule: When periodic update indicates the Work is 14 or more calendar days behind the current approved schedule, submit a separate recovery schedule indicating means by which Contractor intends to regain compliance with the schedule. Indicate changes to working hours, working days, crew sizes, and equipment required to achieve compliance, and date by which recovery will be accomplished.

F. Computer Scheduling Software: Prepare schedules using current version of a program that has been developed specifically to manage construction schedules.

2.2 STARTUP CONSTRUCTION SCHEDULE

A. Bar-Chart Schedule: Submit startup, horizontal, bar-chart-type construction schedule within 14 days of date established for the Notice of Award.

B. Preparation: Indicate each significant construction activity separately. Identify first workday of each week with a continuous vertical line. Outline significant construction activities for first 60 days of construction. Include skeleton diagram for the remainder of the Work and a cash requirement prediction based on indicated activities.

C. Startup Network Diagram may be submitted in lieu of Bar-Chart Schedule.

2.3 CONTRACTOR'S CONSTRUCTION SCHEDULE (BAR CHART/GANTT CHART)

A. Bar Chart/Gantt Chart Schedule: Submit a comprehensive, fully developed, horizontal, Gantt-chart-type, Contractor's construction schedule within 30 days of date established for the Notice to Proceed. Base schedule on the startup construction schedule and additional information received since the start of Project.

B. Preparation: Indicate each significant construction activity separately. Identify first workday of each week with a continuous vertical line.

1. For construction activities that require three months or longer to complete, indicate an estimated completion percentage in 10 percent increments within time bar.

2.4 CONTRACTOR'S CONSTRUCTION SCHEDULE (CPM SCHEDULE)

A. General: Prepare network diagrams using AON (activity-on-node) format.

B. Startup Network Diagram: Submit diagram within 14 days of date established for the Notice to Proceed. Outline significant construction activities for the first 60 days of construction. Include skeleton diagram for the remainder of the Work and a cash requirement prediction based on indicated activities.

C. CPM Schedule: Prepare Contractor's construction schedule using a time-scaled CPM network analysis diagram for the Work.

1. Develop network diagram in sufficient time to submit CPM schedule so it can be accepted for use no later than 30 days after date established for the Notice to Proceed.

a. Failure to include any work item required for performance of this Contract shall not excuse Contractor from completing all work within applicable completion dates, regardless of Architect's approval of the schedule.

2. Conduct educational workshops to train and inform key Project personnel, including subcontractors' personnel, in proper methods of providing data and using CPM schedule information.
3. Establish procedures for monitoring and updating CPM schedule and for reporting progress. Coordinate procedures with progress meeting and payment request dates.
4. Use "one workday" as the unit of time for individual activities. Indicate nonworking days and holidays incorporated into the schedule in order to coordinate with the Contract Time.

D. CPM Schedule Preparation: Prepare a list of all activities required to complete the Work. Using the startup network diagram, prepare a skeleton network to identify probable critical paths.

1. Activities: Indicate the estimated time duration, sequence requirements, and relationship of each activity in relation to other activities. Include estimated time frames for the following activities:

a. Preparation and processing of submittals.
b. Purchase of materials.
c. Delivery.
d. Fabrication.
e. Installation.
f. Punch list and final completion.

2. Critical Path Activities: Identify critical path activities, including those for interim completion dates. Scheduled start and completion dates shall be consistent with Contract milestone dates.
3. Processing: Process data to produce output data on a computer-drawn, time-scaled network. Revise data, reorganize activity sequences, and reproduce as often as necessary to produce the CPM schedule within the limitations of the Contract Time.
4. Format: Mark the critical path. Locate the critical path near center of network; locate paths with most float near the edges.

    a. Subnetworks on separate sheets are permissible for activities clearly off the critical path.

E. Contract Modifications: For each proposed contract modification and concurrent with its submission, prepare a time-impact analysis using a network fragment, fragnet, to demonstrate the effect of the proposed change on the overall project schedule.

F. Initial Issue of Schedule: Prepare initial network diagram from a sorted activity list indicating straight "early start-total float." Identify critical activities. Prepare tabulated reports showing the following:

1. Contractor or subcontractor and the Work or activity.
2. Description of activity.
3. Main events of activity.
4. Immediate preceding and succeeding activities.
5. Early and late start dates.
6. Early and late finish dates.
7. Activity duration in workdays.
8. Total float or slack time.
9. Average size of workforce.
10. Dollar value of activity (coordinated with the schedule of values).

G. Schedule Updating: Concurrent with making revisions to schedule, prepare tabulated reports showing the following:

1. Identification of activities that have changed.
2. Changes in early and late start dates.
3. Changes in early and late finish dates.
4. Changes in activity durations in workdays.
5. Changes in the critical path.
6. Changes in total float or slack time.
7. Changes in the Contract Time.

H. Value Summaries: Prepare two cumulative value lists, sorted by finish dates.

1. In first list, tabulate activity number, early finish date, dollar value, and cumulative dollar value.
2. In second list, tabulate activity number, late finish date, dollar value, and cumulative dollar value.
3. In subsequent issues of both lists, substitute actual finish dates for activities completed as of list date.
4. Prepare list for ease of comparison with payment requests; coordinate timing with progress meetings.

a. In both value summary lists, tabulate "actual percent complete" and "cumulative value completed" with total at bottom.
b. Submit value summary printouts one week before each regularly scheduled progress meeting.

2.5 REPORTS

A. Daily Construction Reports: Prepare a daily construction report recording the following information concerning events at Project site:

1. List of subcontractors at Project site.
2. List of separate contractors at Project site.
3. Approximate count of personnel at Project site.
4. High and low temperatures and general weather conditions, including presence of rain or snow.
5. Accidents.
6. Meetings and significant decisions.
7. Unusual events (see special reports).
8. Stoppages, delays, shortages, and losses.
9. Meter readings and similar recordings.
10. Emergency procedures.
11. Orders and requests of authorities having jurisdiction.
12. Change Orders received and implemented.
13. Construction Change Directives received and implemented.
14. Services connected and disconnected.
15. Equipment or system tests and startups.
16. Partial completions and occupancies.
17. Substantial Completions authorized.

B. Material Location Reports: At monthly intervals, prepare and submit a comprehensive list of materials delivered to and stored at Project site. List shall be cumulative, showing materials previously reported plus items recently delivered. Include with list a statement of progress on and delivery dates for materials or items of equipment fabricated or stored away from Project site.

C. Site Condition Reports: Immediately on discovery of a difference between site conditions and the Contract Documents, prepare and submit a detailed report. Submit with a Request for Information. Include a detailed description of the differing conditions, together with recommendations for changing the Contract Documents.

2.6 SPECIAL REPORTS

A. General: Submit special reports directly to Owner within one day~~(s)~~ of an occurrence. Distribute copies of report to parties affected by the occurrence.

B. Reporting Unusual Events: When an event of an unusual and significant nature occurs at Project site, whether or not related directly to the Work, prepare and submit a special report. List chain of events, persons participating, response by Contractor's personnel, evaluation of results or effects, and similar pertinent information. Advise Owner in advance when these events are known or predictable.

PART 3 - EXECUTION

3.1 CONTRACTOR'S CONSTRUCTION SCHEDULE

A. Scheduling Consultant: Engage a consultant to provide planning, evaluation, and reporting using CPM scheduling.

1. In-House Option: Owner may waive the requirement to retain a consultant if Contractor employs skilled personnel with experience in CPM scheduling and reporting techniques. Submit qualifications.
2. Meetings: Scheduling consultant shall attend all meetings related to Project progress, alleged delays, and time impact.

B. Contractor's Construction Schedule Updating: At monthly intervals, update schedule to reflect actual construction progress and activities. Issue schedule one week before each regularly scheduled progress meeting.

1. Revise schedule immediately after each meeting or other activity where revisions have been recognized or made. Issue updated schedule concurrently with the report of each such meeting.
2. Include a report with updated schedule that indicates every change, including, but not limited to, changes in logic, durations, actual starts and finishes, and activity durations.
3. As the Work progresses, indicate final completion percentage for each activity.

C. Distribution: Distribute copies of approved schedule to Architect–Owner, separate contractors, testing and inspecting agencies, and other parties identified by Contractor with a need-to-know schedule responsibility.

1. Post copies in Project meeting rooms and temporary field offices.
2. When revisions are made, distribute updated schedules to the same parties and post in the same locations. Delete parties from distribution when they have completed their assigned portion of the Work and are no longer involved in performance of construction activities.

3.2 CONSTRUCTION PHOTOGRAPHS

A. Photographer: Engage a qualified professional commercial photographer to take electronic construction photographs.

B. Minimum Digital Camera Resolution: 1800 x 1200 dpi (dots per inch) @ 72 dpi resolution.

C. Acceptable Electronic File Format: .jpg, .tif., .tiff., .tga., jpe., or .png.

D. Date Stamp: Unless otherwise indicated, date and time stamp each photograph as it is being taken so stamp is integral to photograph.

E. Image File Naming Convention (separate by an underscore _):

1. Project Job Number / Year-Month-Day / Image Number . file extension

F. Print Format: 8 in (200 mm) by 10 in (250 mm) smooth surface matte prints on single-weight commercial-grade stock, mounted on linen or card stock to allow a 1 in (25 mm) wide margin and enclosed back to back in clear plastic sleeves that are punched for standard 3-ring binder.

G. Print Identification: On back of each print, provide an applied label or rubber-stamped impression with the following information:

1. Name of Project.
2. Name and address of photographer.
3. Name of Architect.
4. Name of Contractor.
5. Date photograph was taken.
6. Description of vantage point, indicating location, direction (by compass point), and elevation or story of construction.

H. Preconstruction Photographs: Before starting construction, take 4 photographs of Project site and surrounding properties from different vantage points, as directed by Architect. Show existing conditions adjacent to property. Submit prints and CD ROMs with digital files as required under "Submittals" Article.

I. Periodic Construction Photographs: Take 4 photographs monthly, coinciding with cutoff date associated with each Application for Payment. Photographer shall select vantage points to best show status of construction and progress since last photographs were taken. Submit prints and CD ROMs with digital files as required under "Submittals" Article.

1. Field Office Prints: In addition to prints required to be submitted under "Submittals" Article, make and retain in field office at Project site available at all times for reference, one set of prints of periodic construction photographs. Identify photographs the same as for those submitted to Architect.

J. Final Completion Construction Photographs: Take 8 photographs after date of Substantial Completion for submission as Project Record Documents. Architect will direct photographer for desired vantage points. Submit prints and CD ROMs with digital files as required under "Submittals" Article.

END OF SECTION

SECTION 013300

SUBMITTAL PROCEDURES

PART 1 - GENERAL

1.1 SUMMARY

A. Section includes requirements for the submittal schedule and administrative and procedural requirements for submitting Shop Drawings, Product Data, Samples, and other submittals.

1.2 DEFINITIONS

A. Action Submittals: Written and graphic information and physical samples that require Architect's review. Architect's responsive action is required.

B. Digital Signature: A digital signature or digital signature scheme is a mathematical scheme for demonstrating the authenticity of a digital message or document.

C. Electronic Signature: An electronic signature is any legally recognized electronic means that indicates that a person adopts the contents of an electronic message.

D. Informational Submittals: Written and graphic information other than action submittals that require Architect's review. Architect's responsive action is required on informational submittals that do not comply with the information given and design concept expressed in the Drawings and Specifications.

E. Portable Document Format (PDF): An open standard file format licensed by Adobe Systems used for representing documents in a device-independent and display resolution-independent fixed-layout document format.

1.3 SUBMITTALS

A. Submittal Schedule: Submit a schedule of submittals, arranged in chronological order by dates required by construction schedule. Include time required for review, ordering, manufacturing, fabrication, and delivery when establishing dates. Include additional time required for making corrections or revisions to submittals noted by Architect and additional time for handling and reviewing submittals required by those corrections.

1. Coordinate submittal schedule with list of subcontracts, the schedule of values, and Contractor's construction schedule.
2. Initial Submittal: Submit concurrently with startup construction schedule. Include submittals required during the first 60 days of construction. List those submittals required to maintain orderly progress of the Work and those required early because of long lead time for manufacture or fabrication.
3. Final Submittal: Submit concurrently with the first complete submittal of Contractor's construction schedule.

    a. Submit revised submittal schedule to reflect changes in current status and timing for submittals.

4. Format: Arrange the following information in a tabular format:

    a. Scheduled date for first submittal.
    b. Specification Section number and title.
    c. Submittal category: Action; informational.
    d. Name of subcontractor.
    e. Description of the Work covered.
    f. Scheduled date for Architect's final release or approval.

1.4 SUBMITTAL ADMINISTRATIVE REQUIREMENTS

A. Architect's Digital Data Files: If approved by the by Owner, Architect will furnish Contractor one set of digital data files of Drawing files for use in preparing submittals. Architect makes no representations as to the accuracy or completeness of digital data files as they relate to Drawings. .

1. Distribution: Digital data files shall only be distributed via the HKS Thru site with acceptance of HKS data licensing agreement.

B. Coordination: Coordinate preparation and processing of submittals with performance of construction activities.

1. Coordinate each submittal with fabrication, purchasing, testing, delivery, other submittals, and related activities that require sequential activity.
2. Submit all submittal items required for each Specification Section concurrently unless partial submittals for portions of the Work are indicated on approved submittal schedule.
3. Coordinate transmittal of different types of submittals for related parts of the Work so processing will not be delayed because of need to review submittals concurrently for coordination.

    a. Architect reserves the right to withhold action on a submittal requiring coordination with other submittals until related submittals are received.

C. Processing Time: Allow sufficient and reasonable time for submittal review, including time for resubmittals. Time for review shall commence on Architect's receipt of submittal. No extension of the Contract Time will be authorized because of failure to transmit submittals enough in advance of the Work to permit processing, including resubmittals.

1. The Architect’s action will be taken in accordance with the submittal schedule approved by the Architect or, in the absence of an approved submittal schedule, with reasonable promptness while allowing sufficient time in the Architect’s professional judgment to permit adequate review.

D. Paper Submittals: Architect reserves the right to require paper submittals.

E. Electronic Submittals: Identify and incorporate information in each electronic submittal file as follows:

1. Assemble complete submittal package into a single indexed file incorporating submittal requirements of a single Specification Section and transmittal form with links enabling navigation to each item.
2. Name file with submittal number, including revision identifier.

a. File Naming Convention (separate by dashes - or underscores _):

1) Specification Number / Revision Number / Submittal Sequence (A, B, C, etc.).pdf

3. Provide means for insertion to permanently record Contractor's review and approval markings and action taken by Architect.
4. Transmittal Form for Electronic Submittals: Use software-generated form from electronic project management software or electronic form acceptable to Owner**,** containing the following information:

a. Project name.
b. Date.
c. Name and address of Architect.
d. Name of Contractor.
e. Name of firm or entity that prepared submittal.
f. Names of subcontractor, manufacturer, and supplier.
g. Category and type of submittal.
h. Submittal purpose and description.
i. Specification Section number and title.
j. Specification paragraph number or drawing designation and generic name for each of multiple items.
k. Drawing number and detail references, as appropriate.
l. Location(s) where product is to be installed, as appropriate.
m. Related physical samples submitted directly.
n. Indication of full or partial submittal.
o. Transmittal number, numbered consecutively.
p. Submittal and transmittal distribution record.
q. Other necessary identification.
r. Remarks.

5. Metadata: Include the following information as keywords in the electronic submittal file metadata:

a. HKS Job Number and Add Service Number (e.g. 14424.000)
b. Project name.
c. Number and title of appropriate Specification Section.
d. Manufacturer name.
e. Product name.
f. Submittal revision number.

6. Utilize electronic project management software program to process submittals when feasible with the type and extent of submittals. Refer to Division 01 Section "Project Management and Coordination" for description of electronic project management software.

F. Options: Identify options requiring selection by Architect.

G. Deviations and Additional Information: On page, prepared on Contractor's letterhead, record relevant information, requests for data, revisions other than those requested by Architect on previous submittals, and deviations from requirements in the Contract Documents, including minor variations and limitations. Include same identification information as related submittal.

H. Resubmittals: Make resubmittals in same form as initial submittal.

1. Note date and content of previous submittal.
2. Note date and content of revision in file name and clearly indicate extent of revision.
3. Resubmit submittals until they are marked with notation from Architect's action stamp not requiring additional submittals.

I. Distribution: Furnish electronic copies of final submittals to manufacturers, subcontractors, suppliers, fabricators, installers, authorities having jurisdiction, and others as necessary for performance of construction activities. Show distribution on transmittal forms.

J. Use for Construction: Retain complete copies of submittals on Project site. Use only final action submittals that are marked with appropriate notation from Architect's action stamp indicating for construction. Retain a separate copy for Owner to be delivered to Owner with Project Closeout documents.

PART 2 - PRODUCTS

2.1 SUBMITTAL PROCEDURES

A. General Submittal Procedure Requirements: Prepare and submit submittals required by individual Specification Sections. Types of submittals are indicated in individual Specification Sections.

1. Submit electronic submittals as PDF electronic files directly to Architect's Project Web site specifically established for Project.

    a. Architect will return annotated file. Annotate and retain one copy of file as an electronic Project record document file.
    b. Provide PDF electronic files from scanned paper originals at 300 dpi, minimum.

2. Certificates and Certifications Submittals: Provide a statement that includes signature of entity responsible for preparing certification. Certificates and certifications shall be signed by an officer or other individual authorized to sign documents on behalf of that entity.

    a. Provide a digital signature with digital certificate on electronically submitted certificates and certifications where indicated.
    b. When one or more individual Specification Sections includes requirements for notarized signature on certificates and certifications, provide a notarized statement on original paper copy certificates and certifications where indicated.

B. Product Data: Collect information into a single submittal for each element of construction and type of product or equipment.

1. If information must be specially prepared for submittal because standard published data are not suitable for use, submit as Shop Drawings, not as Product Data.
2. Mark each copy of each submittal to show which products and options are applicable.
3. Include the following information, as applicable:

    a. Manufacturer's written recommendations.
    b. Manufacturer's installation instructions.
    c. Mill reports.
    d. Standard product operating and maintenance manuals.

e. Certification that products are appropriate for installation indicated.
f. Manufacturer's catalog cuts.
g. Manufacturer's product specifications.
h. Standard color charts.
i. Statement of compliance with specified referenced standards.
j. Testing by recognized testing agency.
k. Application of testing agency labels and seals.
l. Notation of coordination requirements.
m. Availability and delivery time information.

4. For equipment, include the following in addition to the above, as applicable:

a. Wiring diagrams showing factory-installed wiring.
b. Printed performance curves.
c. Operational range diagrams.
d. Clearances required to other construction, if not indicated on accompanying Shop Drawings.

5. Submit Product Data before or concurrent with Samples.
6. Submit Product Data in the following format:

a. PDF electronic file.

C. Shop Drawings: Prepare Project-specific information, drawn accurately to scale. Do not base Shop Drawings on reproductions of the Contract Documents or standard printed data.

1. Preparation: Fully illustrate requirements in the Contract Documents. Include the following information, as applicable:

a. Identification of products.
b. Dimensions.
c. Fabrication and installation drawings.
d. Roughing-in and setting diagrams.
e. Wiring diagrams showing field-installed wiring, including power, signal, and control wiring.
f. Shopwork manufacturing instructions.
g. Templates and patterns.
h. Design calculations.
i. Schedules.
j. Compliance with specified standards.
k. Notation of coordination requirements.
l. Notation of dimensions established by field measurement.
m. Relationship and attachment to adjoining construction clearly indicated.
n. Seal and signature of professional engineer.

2. Wiring Diagrams: Differentiate between manufacturer-installed and field-installed wiring.
3. Sheet Size: Except for templates, patterns, and similar full-size drawings, submit Shop Drawings on sheets at least 8-1/2 by 11 inches (212 by 275 mm), but no larger than 30 by 42 inches (750 by 1050 mm).
4. Submit Shop Drawings in the following format:

a. PDF electronic file.

5. BIM File Incorporation: When applicable, develop and incorporate Shop Drawing files into Building Information Model established for Project.

    a. Prepare Shop Drawings in the following format: Same digital data software program, version, and operating system as the original Drawings.
    b. Refer to Division 01 Section "Project Management and Coordination" for requirements for coordination drawings.

D. Samples: Submit Samples for review of kind, color, pattern, and texture for a check of these characteristics with other elements and for a comparison of these characteristics between submittal and actual component as delivered and installed.

1. Transmit Samples that contain multiple, related components such as accessories together in one submittal package.
2. Identification: Attach label on unexposed side of Samples that includes the following:

    a. Generic description of Sample.
    b. Product name and name of manufacturer.
    c. Sample source.
    d. Number and title of applicable Specification Section.
    e. Specification paragraph number and generic name of each item.

3. For projects where electronic submittals are required, provide corresponding electronic submittal of Sample transmittal, digital image file illustrating Sample characteristics, and identification information for record. This is in addition to physical samples.
4. Disposition: Maintain sets of approved Samples at Project site, available for quality-control comparisons throughout the course of construction activity. Sample sets may be used to determine final acceptance of construction associated with each set.

    a. Samples that may be incorporated into the Work are indicated in individual Specification Sections. Such Samples must be in an undamaged condition at time of use.
    b. Samples not incorporated into the Work, or otherwise designated as Owner's property, are the property of Contractor.

5. Samples for Initial Selection: Submit manufacturer's color charts consisting of units or sections of units showing the full range of colors, textures, and patterns available.

    a. Number of Samples: Submit 4 full set(s) of available choices where color, pattern, texture, or similar characteristics are required to be selected from manufacturer's product line. Architect will return submittal with options selected.

6. Samples for Verification: Submit full-size units or Samples of size indicated, prepared from same material to be used for the Work, cured and finished in manner specified, and physically identical with material or product proposed for use, and that show full range of color and texture variations expected. Samples include, but are not limited to, the following: partial sections of manufactured or fabricated components; small cuts or containers of materials; complete units of repetitively used materials; swatches showing color, texture, and pattern; color range sets; and components used for independent testing and inspection.

a. Number of Samples: Submit 4 sets of Samples. Architect will retain 2 Sample sets; remainder will be returned. Mark up and retain one returned Sample set as a project record sample.

1) Submit a single Sample where assembly details, workmanship, fabrication techniques, connections, operation, and other similar characteristics are to be demonstrated.
2) If variation in color, pattern, texture, or other characteristic is inherent in material or product represented by a Sample, submit at least 4 sets of paired units that show approximate limits of variations.

E. Coordination Drawing Submittals: Comply with requirements specified in Division 01 Section "Project Management and Coordination."

F. Contractor's Construction Schedule: Comply with requirements specified in Division 01 Section "Construction Progress Documentation."

G. Application for Payment and Schedule of Values: Comply with requirements specified in Division 01 Section "Payment Procedures."

H. Test and Inspection Reports and Schedule of Tests and Inspections Submittals: Comply with requirements specified in Division 01 Section "Quality Requirements."

I. Closeout Submittals and Maintenance Material Submittals: Comply with requirements specified in Division 01 Section "Closeout Procedures."

J. Maintenance Data: Comply with requirements specified in Division 01 Section "Operation and Maintenance Data."

K. Sustainable Construction Submittals: Where applicable, comply with requirements specified in Division 01 sustainable construction requirements Section.

L. Qualification Data: Prepare written information that demonstrates capabilities and experience of firm or person. Include lists of completed projects with project names and addresses, contact information of architects and owners, and other information specified.

M. Welding Certificates: Prepare written certification that welding procedures and personnel comply with requirements in the Contract Documents. Submit record of Welding Procedure Specification and Procedure Qualification Record on AWS forms. Include names of firms and personnel certified.

N. Installer Certificates: Submit written statements on manufacturer's letterhead certifying that Installer complies with requirements in the Contract Documents and, where required, is authorized by manufacturer for this specific Project.

O. Manufacturer Certificates: Submit written statements on manufacturer's letterhead certifying that manufacturer complies with requirements in the Contract Documents. Include evidence of manufacturing experience where required.

P. Product Certificates: Submit written statements on manufacturer's letterhead certifying that product complies with requirements in the Contract Documents.

Q. Material Certificates: Submit written statements on manufacturer's letterhead certifying that material complies with requirements in the Contract Documents.

R. Material Test Reports: Submit reports written by a qualified testing agency, on testing agency's standard form, indicating and interpreting test results of material for compliance with requirements in the Contract Documents.

S. Product Test Reports: Submit written reports indicating that current product produced by manufacturer complies with requirements in the Contract Documents. Base reports on evaluation of tests performed by manufacturer and witnessed by a qualified testing agency, or on comprehensive tests performed by a qualified testing agency.

T. Research Reports: Submit written evidence, from a model code organization acceptable to authorities having jurisdiction, that product complies with building code in effect for Project. Include the following information:

1. Name of evaluation organization.
2. Date of evaluation.
3. Time period when report is in effect.
4. Product and manufacturers' names.
5. Description of product.
6. Test procedures and results.
7. Limitations of use.

U. Preconstruction Test Reports: Submit reports written by a qualified testing agency, on testing agency's standard form, indicating and interpreting results of tests performed before installation of product, for compliance with performance requirements in the Contract Documents.

V. Compatibility Test Reports: Submit reports written by a qualified testing agency, on testing agency's standard form, indicating and interpreting results of compatibility tests performed before installation of product. Include written recommendations for primers and substrate preparation needed for adhesion.

W. Field Test Reports: Submit written reports indicating and interpreting results of field tests performed either during installation of product or after product is installed in its final location, for compliance with requirements in the Contract Documents.

X. Design Data: Prepare and submit written and graphic information, including, but not limited to, performance and design criteria, list of applicable codes and regulations, and calculations. Include list of assumptions and other performance and design criteria and a summary of loads. Include load diagrams if applicable. Provide name and version of software, if any, used for calculations. Include page numbers.

2.2 DELEGATED-ENGINEERING SERVICES

A. Performance and Design Criteria: Where professional design services or certifications by a design professional are specifically required of Contractor by the Contract Documents, provide products and systems complying with specific performance and design criteria indicated.

1. If criteria indicated are not sufficient to perform services or certification required, submit a written request for additional information to Architect.

B. Delegated-Engineering Services Certification: In addition to Shop Drawings, Product Data, and other required submittals, submit digitally signed PDF electronic file and three paper copies of certificate, signed and sealed by the responsible design professional, for each product and system specifically assigned to Contractor to be designed or certified by a design professional.

1. Indicate that products and systems comply with performance and design criteria in the Contract Documents. Include list of codes, loads, and other factors used in performing these services.

C. BIM File Incorporation: Where applicable, incorporate delegated-design drawing and data files into Building Information Model established for Project.

1. Prepare delegated-design drawings in the following format: Same digital data software program, version, and operating system as the original Drawings.

PART 3 - EXECUTION

3.1 CONTRACTOR'S REVIEW

A. Action and Informational Submittals: Review each submittal and check for coordination with other Work of the Contract and for compliance with the Contract Documents. Note corrections and field dimensions. Mark with approval stamp before submitting to Architect.

B. Project Closeout and Maintenance Material Submittals: See requirements in Division 01 Section "Closeout Procedures."

C. Approval Stamp: Stamp each submittal with a uniform, approval stamp. Include Project name and location, submittal number, Specification Section title and number, name of reviewer, date of Contractor's approval, and statement certifying that submittal has been reviewed, checked, and approved for compliance with the Contract Documents.

3.2 ARCHITECT'S ACTION

A. Action Submittals: Architect will review submittal, make marks to indicate corrections or revisions required, and return it. Architect will stamp and mark submittal appropriately, as follows:

1. Final but Restricted Release: When submittals are marked "Accepted as Noted," the Work covered by the submittal may proceed provided it complies with both the Architect's notations and corrections on the submittal and requirements of the Contract Documents. Final acceptance will depend on that compliance.
2. Returned for Resubmittal: When submittal is marked "Revise Resubmit," do not proceed with the Work covered by the submittal, including purchasing, fabrication, delivery, or other activity. Revise or prepare a new submittal in accordance with the Architect's notations. Resubmit without delay. Repeat if necessary to obtain a different action mark.

a. Do not permit submittals marked "Revise Resubmit" to be used at the Project site, or elsewhere where construction is in progress.

3. Submittals Not Required: Where a submittal is primarily for other Contractor activity, the submittal will be returned, marked “Not Reviewed; Submittal not required by Contract

Documents".

B. Architect's acceptance of Shop Drawings, Samples or Product Data which deviates from the Contract Documents does not authorize changes to the Contract Sum. Submit in writing at the time of submission any changes to the Contract Sum affected by such Shop Drawings, Samples or Product Data, otherwise, claim for extras will not be considered.

C. Informational Submittals: Architect will review submittal, and return it in accordance with submittal Processing Time indicated if it does not comply with requirements. Architect will stamp and mark submittal appropriately.

D. Partial submittals prepared for a portion of the Work will be reviewed when use of partial submittals has received prior approval from Architect. Review shall not be final until complete submittal has been reviewed by Architect.

E. Incomplete submittals are unacceptable, will be considered nonresponsive, and will be returned for resubmittal without review.

F. Submittals not required by the Contract Documents may be returned by the Architect without action.

G. Electronic File of Submittal Documents: Provide Architect with an independent electronic archive of project submittal documents using electronic project management software as defined in Division 01 Section "Project Management and Coordination".

END OF SECTION

SECTION 01 4000

QUALITY REQUIREMENTS

PART 1 - GENERAL

1.1 SUMMARY

A. Section includes administrative and procedural requirements for quality assurance and quality control.

B. Testing and inspecting services are required to verify compliance with requirements specified or indicated. These services do not relieve Contractor of responsibility for compliance with the Contract Document requirements.

1. Specific quality-assurance and -control requirements for individual construction activities are specified in the Sections that specify those activities. Requirements in those Sections may also cover production of standard products.
2. Specified tests, inspections, and related actions do not limit Contractor's other quality-assurance and -control procedures that facilitate compliance with the Contract Document requirements.
3. Requirements for Contractor to provide quality-assurance and -control services required by Architect, Owner, or authorities having jurisdiction are not limited by provisions of this Section.

1.2 DEFINITIONS

A. Quality-Assurance Services: Activities, actions, and procedures performed before and during execution of the Work to guard against defects and deficiencies and substantiate that proposed construction will comply with requirements.

B. Quality-Control Services: Tests, inspections, procedures, and related actions during and after execution of the Work to evaluate that actual products incorporated into the Work and completed construction comply with requirements. Services do not include contract enforcement activities performed by Architect.

C. Mockups: Full-size physical assemblies that are constructed on-site. Mockups are constructed to verify selections made under Sample submittals; to demonstrate aesthetic effects and, where indicated, qualities of materials and execution; to review coordination, testing, or operation; to show interface between dissimilar materials; and to demonstrate compliance with specified installation tolerances. Mockups are not Samples. Mockups establish the standard by which the Work will be judged.

1. Integrated Exterior Mockups: Mockups of the exterior envelope erected separately from the building but on Project site, consisting of multiple products, assemblies, and subassemblies.
2. Room Mockups: Mockups of typical interior spaces complete with wall, floor, and ceiling finishes, doors, windows, millwork, casework, specialties, furnishings and equipment, and lighting.
3. Laboratory Mockups: Full-size physical assemblies constructed at testing facility to verify performance characteristics.

D. Preconstruction Testing: Tests and inspections performed specifically for Project before products and materials are incorporated into the Work, to verify performance or compliance with specified criteria.

E. Product Testing: Tests and inspections that are performed by an NRTL (Nationally Recognized Testing Laboratories), an NVLAP (National Voluntary Laboratory Accreditation Program), or a testing agency qualified to conduct product testing and acceptable to authorities having jurisdiction, to establish product performance and compliance with specified requirements.

F. Source Quality-Control Testing: Tests and inspections that are performed at the source, e.g., plant, mill, factory, or shop.

G. Field Quality-Control Testing: Tests and inspections that are performed on-site for installation of the Work and for completed Work.

H. Testing Agency: An entity engaged to perform specific tests, inspections, or both. Testing laboratory shall mean the same as testing agency.

I. Installer/Applicator/Erector: Contractor or another entity engaged by Contractor as an employee, Subcontractor, or Sub-subcontractor, to perform a particular construction operation, including installation, erection, application, and similar operations.

1. Use of trade-specific terminology in referring to a trade or entity does not require that certain construction activities be performed by accredited or unionized individuals, or that requirements specified apply exclusively to specific trade(s).

J. Experienced: When used with an entity or individual, "experienced" means having successfully completed a minimum of five previous projects similar in nature, size, and extent to this Project; being familiar with special requirements indicated; and having complied with requirements of authorities having jurisdiction and with the qualification requirements of individual specification section governing their work.

1.3 CONFLICTING REQUIREMENTS

A. Referenced Standards: If compliance with two or more standards is specified and the standards establish different or conflicting requirements for minimum quantities or quality levels, comply with the most stringent requirement. Refer conflicting requirements to Architect for a decision before proceeding.

B. Minimum Quantity or Quality Levels: The quantity or quality level shown or specified shall be the minimum provided or performed. The actual installation may comply exactly with the minimum quantity or quality specified, or it may exceed the minimum within reasonable limits. To comply with these requirements, indicated numeric values are minimum or maximum, as appropriate, for the context of requirements. Refer uncertainties to Architect for a decision before proceeding.

1.4 CONTRACTOR'S QUALITY-CONTROL PLAN

A. Quality-Control Plan, General: Submit quality-control plan prior to preconstruction conference. Submit in format acceptable to Architect. Identify personnel, procedures, controls, instructions, tests, records, and forms to be used to carry out Contractor's quality-assurance and quality-control responsibilities. Coordinate with Contractor's construction schedule.

B. Quality-Control Personnel Qualifications: Engage qualified full-time personnel trained and experienced in managing and executing quality-assurance and quality-control procedures similar in nature and extent to those required for Project.

1. Project quality-control manager may be the Project superintendent or be an individual with no other Project responsibilities, as accepted by the Architect.

C. Submittal Procedure: Describe procedures for ensuring compliance with requirements through review and management of submittal process. Indicate qualifications of personnel responsible for submittal review.

D. Testing and Inspection: In quality-control plan, include a comprehensive schedule of Work requiring testing or inspection, including the following:

1. Contractor-performed tests and inspections including subcontractor-performed tests and inspections. Include required tests and inspections and Contractor-elected tests and inspections.
2. Special inspections required by authorities having jurisdiction and indicated on the "Statement of Special Inspections."
3. Owner-performed tests and inspections indicated in the Contract Documents, including tests and inspections indicated to be performed by the Commissioning Authority when Commissioning is included in the Project.

E. Continuous Inspection of Workmanship: Describe process for continuous inspection during construction to identify and correct deficiencies in workmanship in addition to testing and inspection specified. Indicate types of corrective actions to be required to bring work into compliance with standards of workmanship established by Contract requirements and approved mockups.

F. Monitoring and Documentation: Maintain testing and inspection reports including log of approved and rejected results, including Owner acceptance of nonconforming work. Include work Architect has indicated as nonconforming or defective. Indicate corrective actions taken to bring nonconforming work into compliance with requirements. Comply with requirements of authorities having jurisdiction.

1.5 REPORTS AND DOCUMENTS

A. Test and Inspection Reports: Prepare and submit certified written reports specified in other Sections. Include the following:

1. Date of issue.
2. Project title and number.
3. Name, address, and telephone number of testing agency.
4. Dates and locations of samples and tests or inspections.
5. Names of individuals making tests and inspections.
6. Description of the Work and test and inspection method.
7. Identification of product and Specification Section.
8. Complete test or inspection data.
9. Test and inspection results and an interpretation of test results.
10. Record of temperature and weather conditions at time of sample taking and testing and inspecting.
11. Comments or professional opinion on whether tested or inspected Work complies with the Contract Document requirements.
12. Name and signature of laboratory inspector.
13. Recommendations on retesting and reinspecting.

B. Manufacturer's Technical Representative's Field Reports: Prepare written information documenting manufacturer's technical representative's tests and inspections specified in other Sections. Include the following:

1. Name, address, and telephone number of technical representative making report.
2. Statement on condition of substrates and their acceptability for installation of product.
3. Statement that products at Project site comply with requirements.
4. Summary of installation procedures being followed, whether they comply with requirements and, if not, what corrective action was taken.
5. Results of operational and other tests and a statement of whether observed performance complies with requirements.
6. Statement whether conditions, products, and installation will affect warranty.
7. Statement whether conditions, products, and installation exceed manufacturer's statements.
8. Other required items indicated in individual Specification Sections.

C. Factory-Authorized Service Representative's Reports: Prepare written information documenting manufacturer's factory-authorized service representative's tests and inspections specified in other Sections. Include the following:

1. Name, address, and telephone number of factory-authorized service representative making report.
2. Statement that equipment complies with requirements.
3. Results of operational and other tests and a statement of whether observed performance complies with requirements.
4. Statement whether conditions, products, and installation will affect warranty.
5. Other required items indicated in individual Specification Sections.

D. Permits, Licenses, and Certificates: For Owner's records, submit copies of permits, licenses, certifications, inspection reports, releases, jurisdictional settlements, notices, receipts for fee payments, judgments, correspondence, records, and similar documents, established for compliance with standards and regulations bearing on performance of the Work.

1.6 QUALITY ASSURANCE

A. General: Qualifications paragraphs in this article establish the minimum qualification levels required; individual Specification Sections specify additional requirements.

B. Manufacturer Qualifications: A firm experienced in manufacturing products or systems similar to those indicated for this Project and with a record of successful in-service performance, as well as sufficient production capacity to produce required units.

C. Fabricator Qualifications: A firm experienced in producing products similar to those indicated for this Project and with a record of successful in-service performance, as well as sufficient production capacity to produce required units.

D. Installer Qualifications: A firm or individual experienced in installing, erecting, or assembling work similar in material, design, and extent to that indicated for this Project, whose work has resulted in construction with a record of successful in-service performance.

E. Professional Engineer Qualifications: A professional engineer who is legally qualified to practice in jurisdiction where Project is located and who is experienced in providing engineering services of the kind indicated. Engineering services are defined as those performed for installations of the system, assembly, or product that is similar in material, design, and extent to those indicated for this Project.

F. Specialists: Certain Specification Sections require that specific construction activities shall be performed by entities who are recognized experts in those operations. Specialists shall satisfy qualification requirements indicated and shall be engaged for the activities indicated.

1. Requirements of authorities having jurisdiction shall supersede requirements for specialists.

G. Testing Agency Qualifications: An NRTL, an NVLAP, or an independent agency with the experience and capability to conduct testing and inspecting indicated, as documented according to ASTM E 329; and with additional qualifications specified in individual Sections; and, where required by authorities having jurisdiction, that is acceptable to authorities.

1. NRTL: A nationally recognized testing laboratory according to 29 CFR 1910.7.
2. NVLAP: A testing agency accredited according to NIST's National Voluntary Laboratory Accreditation Program.

H. Manufacturer's Technical Representative Qualifications: An authorized representative of manufacturer who is trained and approved by manufacturer to observe and inspect installation of manufacturer's products that are similar in material, design, and extent to those indicated for this Project.

I. Factory-Authorized Service Representative Qualifications: An authorized representative of manufacturer who is trained and approved by manufacturer to inspect installation of manufacturer's products that are similar in material, design, and extent to those indicated for this Project.

J. Preconstruction Testing: Where testing agency is indicated to perform preconstruction testing for compliance with specified requirements for performance and test methods, comply with the following:

1. Contractor responsibilities include the following:

a. Provide test specimens representative of proposed products and construction.
b. Submit specimens in a timely manner with sufficient time for testing and analyzing results to prevent delaying the Work.
c. Provide sizes and configurations of test assemblies, mockups, and laboratory mockups to adequately demonstrate capability of products to comply with performance requirements.
d. Build site-assembled test assemblies and mockups using installers who will perform same tasks for Project.
e. Build laboratory mockups at testing facility using personnel, products, and methods of construction indicated for the completed Work.
f. When testing is complete, remove test specimens, assemblies, mockups, and laboratory mockups; do not reuse products on Project.

2. Testing Agency Responsibilities: Submit a certified written report of each test, inspection, and similar quality-assurance service to Architect, with copy to Contractor. Interpret tests and inspections and state in each report whether tested and inspected work complies with or deviates from the Contract Documents.

K. Mock-ups: Prior to fabrication and installation, build mock-up for each form of construction and finish required to verify selections made under sample Submittals and to demonstrate aesthetic effects and qualities of materials and execution. Build mock-up to comply with the following requirements, using materials indicated for the completed Work:

1. Build mock-up in the location and of the size indicated or, if not indicated, as directed by Architect. Contractor shall provide structural support framework.

    a. Show typical components, attachments to building structure, and requirements of installation.

2. Clean exposed faces of mock-up.
3. Notify Architect seven days in advance of the dates and times when mock-up will be installed.
4. Demonstrate the proposed range of aesthetic effects and workmanship.
5. Protect accepted mock-up from the elements with weather-resistant membrane.
6. Obtain Architect's acceptance of mock-ups before starting fabrication.
7. Maintain mock-ups during construction in an undisturbed condition as a standard for review of the completed Work.
8. Acceptance of mock-ups does not constitute acceptance of deviations from the Contract Documents contained in mock-ups unless such deviations are specifically noted by Contractor, submitted to Architect in writing, and accepted by Architect in writing.
9. Demolish and remove mock-ups when directed by Architect unless accepted to become part of the completed Work.

L. Integrated Exterior Mockups: See Division 01 Section "Visual Mock-Up Requirements".

M. Room Mockups: See Division 01 Section "Visual Mock-Up Requirements".

N. Laboratory Mockups: See Division 01 Section "Testing Mock-Up for Building Enclosure System".

1.7 QUALITY CONTROL

A. Owner Responsibilities: Where quality-control services are indicated as Owner's responsibility, Owner will engage a qualified testing agency to perform these services.

1. Owner will furnish Contractor with names, addresses, and telephone numbers of testing agencies engaged and a description of types of testing and inspecting they are engaged to perform.
2. Costs for retesting and reinspecting construction that replaces or is necessitated by work that failed to comply with the Contract Documents will be charged to Contractor.

B. Contractor Responsibilities: Tests and inspections not explicitly assigned to Owner are Contractor's responsibility. Perform additional quality-control activities required to verify that the Work complies with requirements, whether specified or not.

1. Unless otherwise indicated, provide quality-control services specified and those required by authorities having jurisdiction. Perform quality-control services required of Contractor by authorities having jurisdiction, whether specified or not.
2. Where services are indicated as Contractor's responsibility, engage a qualified testing agency to perform these quality-control services.

a. Contractor shall not employ same entity engaged by Owner, unless agreed to in writing by Owner.

3. Notify testing agencies at least 48 hours in advance of time when Work that requires testing or inspecting will be performed.
4. Where quality-control services are indicated as Contractor's responsibility, submit a certified written report, in duplicate, of each quality-control service.
5. Testing and inspecting requested by Contractor and not required by the Contract Documents are Contractor's responsibility.
6. Submit additional copies of each written report directly to authorities having jurisdiction, when they so direct.

C. Manufacturer's Field Services: Where indicated, engage a factory-authorized service representative to inspect field-assembled components and equipment installation, including service connections. Report results in writing as specified in Division 01 Section "Submittal Procedures."

D. Manufacturer's Technical Services: Where indicated, engage a manufacturer's technical representative to observe and inspect the Work. Manufacturer's technical representative's services include participation in preinstallation conferences, examination of substrates and conditions, verification of materials, observation of Installer activities, inspection of completed portions of the Work, and submittal of written reports.

E. Retesting/Reinspecting: Regardless of whether original tests or inspections were Contractor's responsibility, provide quality-control services, including retesting and reinspecting, for construction that replaced Work that failed to comply with the Contract Documents.

F. Testing Agency Responsibilities: Cooperate with Architect and Contractor in performance of duties. Provide qualified personnel to perform required tests and inspections.

1. Notify Architect and Contractor promptly of irregularities or deficiencies observed in the Work during performance of its services.
2. Conduct and interpret tests and inspections and state in each report whether tested and inspected work complies with or deviates from requirements.
3. Submit a certified written report, in duplicate, of each test, inspection, and similar quality-control service through Contractor.
4. Do not release, revoke, alter, or increase the Contract Document requirements or approve or accept any portion of the Work.
5. Do not perform any duties of Contractor.

G. Associated Services: Cooperate with agencies performing required tests, inspections, and similar quality-control services, and provide reasonable auxiliary services as requested. Notify agency sufficiently in advance of operations to permit assignment of personnel. Provide the following:

1. Access to the Work.
2. Incidental labor and facilities necessary to facilitate tests and inspections.
3. Adequate quantities of representative samples of materials that require testing and inspecting. Assist agency in obtaining samples.
4. Facilities for storage and field curing of test samples.
5. Delivery of samples to testing agencies.
6. Preliminary design mix proposed for use for material mixes that require control by testing agency.
7. Security and protection for samples and for testing and inspecting equipment at Project site.

H. Coordination: Coordinate sequence of activities to accommodate required quality-assurance and -control services with a minimum of delay and to avoid necessity of removing and replacing construction to accommodate testing and inspecting.

1. Schedule times for tests, inspections, obtaining samples, and similar activities.

I. Schedule of Tests and Inspections: Prepare a schedule of tests, inspections, and similar quality-control services required by the Contract Documents. Coordinate and submit concurrently with Contractor's construction schedule.

1. Distribution: Distribute schedule to Owner, Architect, testing agencies, and each party involved in performance of portions of the Work where tests and inspections are required.

a. Prepare in tabular form and include the following:

1) Specification Section number and title.
2) Entity responsible for performing tests and inspections.
3) Description of test and inspection.
4) Identification of applicable standards.
5) Identification of test and inspection methods.
6) Number of tests and inspections required.
7) Time schedule or time span for tests and inspections.
8) Requirements for obtaining samples.
9) Unique characteristics of each quality-control service.

1.8 SPECIAL TESTS AND INSPECTIONS

A. Special Tests and Inspections: Owner may engage a qualified to conduct special tests and inspections required by authorities having jurisdiction as the responsibility of Owner, and as follows:

1. Notifying Architect and Contractor promptly of irregularities and deficiencies observed in the Work during performance of its services.
2. Submitting a certified written report of each test, inspection, and similar quality-control service to Architect with copy to Contractor and to authorities having jurisdiction.
3. Submitting a final report of special tests and inspections at Substantial Completion, which includes a list of unresolved deficiencies.
4. Interpreting tests and inspections and stating in each report whether tested and inspected work complies with or deviates from the Contract Documents.
5. Retesting and reinspecting corrected work.

PART 2 - PRODUCTS (Not Used)

PART 3 - EXECUTION

3.1 TEST AND INSPECTION LOG

A. Test and Inspection Log: Prepare a record of tests and inspections. Include the following:

1. Date test or inspection was conducted.
2. Description of the Work tested or inspected.
3. Date test or inspection results were transmitted to Architect.

4. Identification of testing agency or special inspector conducting test or inspection.

B. Maintain log at Project site. Post changes and revisions as they occur. Provide access to test and inspection log for Architect's reference during normal working hours.

3.2 REPAIR AND PROTECTION

A. General: On completion of testing, inspecting, sample taking, and similar services, repair damaged construction and restore substrates and finishes.

1. Provide materials and comply with installation requirements specified in other Specification Sections or matching existing substrates and finishes. Restore patched areas and extend restoration into adjoining areas in a manner that eliminates evidence of patching. Comply with the Contract Document requirements for cutting and patching in Division 01 Section "Execution."

B. Protect construction exposed by or for quality-control service activities.

C. Repair and protection are Contractor's responsibility, regardless of the assignment of responsibility for quality-control services.

END OF SECTION

SECTION 01 4323

SPECIAL INSPECTIONS

PART 1 - GENERAL

1.1 SUMMARY

A. Section Includes: Special Inspections required by Authorities Having Jurisdiction including supplementary work necessary to complete inspections.

1.2 RESPONSIBILITY

A. Special Inspections do not relieve the Contractor of the responsibility to provide construction in accordance with the Contract Documents.

1.3 INSPECTOR'S RESPONSIBILITY

A. Special Inspector shall be acceptable to the Authorities Having Jurisdiction for this project.

B. Special Inspector shall be completely familiar with the Contract Documents relating to inspection responsibility.

1.4 COOPERATION

A. Contractor shall cooperate with and assist Special Inspector in performing Special Inspections. Special Inspector shall have access to the project without restriction.

1. Contractor shall advise Special Inspector in advance of construction schedules and planned operations to assure timely and appropriate observation and inspection of items requiring Special Inspections.
2. Contractor shall make available approved Shop Drawings to the Special Inspector at jobsite.

1.5 OWNER'S RESPONSIBILITY

A. Cost of employing the Special Inspector shall be the responsibility of the Owner.

B. Final interpretation of the Contract Documents shall rest with the Architect and Engineers of Record.

1.6 GENERAL DUTIES OF SPECIAL INSPECTOR

A. Special Inspector shall cooperate with the Contractor on timely observations and inspections of Work. Special Inspector shall not supervise or direct the Work.

B. Special Inspector shall immediately alert the Contractor of discrepancies and deviations from the Contract Documents and approved Shop Drawings.

C. Special Inspection Reports shall be submitted within 24 hours of the time and date of the observation and inspection.

1. Special Inspector shall submit his reports to the Authorities Having Jurisdiction for the project. In addition, Special Inspector shall submit copies of reports to the Owner and to the Contractor.
2. Upon completion of the building and prior to the issuance of a Certificate of Occupancy, a signed and sealed statement by the Special Inspector shall be submitted to the Authorities Having Jurisdiction, stating the portion of the project subject to Special Inspections has been constructed in accordance with the Contract Documents. This statement shall be provided in accordance with the governing building codes and ordinances.

1.7 SCHEDULE OF SPECIAL INSPECTIONS

A. Refer to attached Schedule of Summary of Special Inspections.

PART 2 - PRODUCTS - Not Used

PART 3 - EXECUTION - Not Used

END OF SECTION

SECTION 01 4339

VISUAL MOCK-UP REQUIREMENTS

PART 1 - GENERAL

1.1 SUMMARY

A. This Section specifies full size mock-up requirements of building components to verify material selections, demonstrate aesthetic effects and review construction and workmanship.

B. Approved mock-up shall establish the standard by which the Work will be judged.

C. Acceptance of mock-up does not constitute approval of deviations from the Contract Documents in mock-up, unless such deviations are specifically approved by Architect in writing.

D. Retain mock-ups during construction and maintain in an undisturbed condition. Do not demolish alter or remove mock-up until approved by Architect.

E. Mock-up shall be used to demonstrate quality of materials, finish and workmanship as well as to show compliance with visual criteria.

F. Submit shop drawings prior to fabrication of visual mock-up, showing plan, elevations and details of mock-up.

PART 2 - PRODUCTS

2.1 MATERIALS

A. As specified in individual Specification Sections.

PART 3 - EXECUTION

3.1 INSTALLATION

A. Use the same workers to do work in conjunction with construction of the mock-up as covered by the work of their respective Contracts.

B. Provide mock-up complete with corners, splice joints, control joints, sealants, and complete finish with details identical to those proposed for use in the building and as indicated on the drawings.

C. Do not use special measures or techniques, which are not representative of those to be used in the building. Finish the various components to show the maximum variation that will exist in the actual building construction between adjacent components.

D. Notify Architect when construction of mock-up begins and when major components are to be installed.

E. Complete the mock-up and obtain Architect's approval of each component of the mock-up prior to fabrication or purchase of products for the Project.

3.2 BUILDING EXTERIOR WALL

A. Fabricate and erect a visual mock-up of the typical exterior wall condition with one outside corner returning to the window line.

1. Mock-up size: As indicated on drawing elevations.

B. Provide structural steel frame work for support of visual mock up. Frame work shall be designed by a registered professional or structural engineer licensed in the State where the Project is located.

C. Coordinate with Architect and Owner for location of mock-up on project site. When directed, demolish mock-ups and remove from Project site.

D. Construct mock-up in such a manner that each type of exterior finishes will be demonstrated in a layered fashion from one side to the other. The purpose in the layers is to facilitate the review of the multiple activities that are required to accomplish the final finish.

E. Construct mock-up in phases so that proposed construction methodologies can be observed. Mock-up shall be completely constructed, just as if it were the finished exterior wall. Wall insulation and interior wall finishes are not required.

F. In addition to specifics in the respective Specification Sections, the mock-up will be reviewed by the Owner and the Architect for the following evaluation purposes:

1. Aesthetic: To review and verify selections made under submittals, as well as to show compliance with visual criteria. Acceptance criteria is for general and specific aesthetic qualities of construction, and includes, but is not limited to, the following:

a. Color, texture, and blending of masonry units.
b. Consistency of masonry mortar color.
c. Tooling of masonry mortar joints.
d. Color, texture and finishing of exterior insulation and finish system (EIFS).
e. Tooling of sealants.
f. Color consistency of aluminum window framing.
g. Color and clarity of glass.
h. Flatness and alignment of aluminum composite material panels.

2. Installation Execution: To review and verify quality of workmanship, and compliance with Drawings, Specification and submittals. Acceptance criteria is for general and specific erection, installation and application qualities of construction, and includes, but is not limited to, the following:

a. Masonry bonding and mortar character.
b. Brick cavity cleanliness.
c. Brick cavity drainage function.
d. Masonry anchor and ties integrity.
e. Masonry flashing fabrication and embedment within the masonry.
f. Assembly of various components of the exterior insulation and finish system (EIFS), including color, texture and finishing.
g. Cold-formed metal framing fabrication and assemblage.
h. Glazed aluminum wall system fabrication, anchorage/attachment, and installation quality.
i. Glazing integrity.
j. Sealant profile consistency and bonding integrity.
k. Attachment of aluminum composite material panels.

l. Dimensional tolerances.

3.3 TYPICAL ROOM MOCK-UP

A. Arrange for the construction of a typical room mock-up located in the building, per mutual agreement between Owner and Contractor.

1. Typical Restrooms: At the first installation of a typical office restroom, complete finishes, fixtures and accessories in one restroom module as a visual mock-up.
2. Typical Patient Room: At the first installation of a typical hospital patient room, complete finishes, fixtures and accessories in one patient room module as a visual mock-up.

B. The materials trades Subcontractors shall do all work in conjunction with construction of the mock-up as covered by the work of their respective Contracts.

C. Typical Room mock-up shall be complete with finishes, fixtures and details identical to those proposed for use in the Project. Do not use special measures or techniques, which are not representative of those to be used in the finish work. Finish the various components to show the quality of material and construction that will exist in the actual construction.

D. Typical room mock-up shall be of adequate size to contain all samples and demonstrate quality of materials, finish and workmanship as well as to show compliance with visual criteria. Submit shop drawings to show layout of room prior to construction. Mock-up room shall be constructed as soon as sufficient structure is available to allow installation.

E. Materials or workmanship not approved shall be removed and replaced with acceptable products or workmanship. Fabrication, purchase or installation of materials for the building shall not begin until approved in the mock-up room. Owner's approval of samples will be required on all visual items prior to any contractor's buy-out.

F. Materials installed in the room mock-up shall include an example of all furnished assemblies, hardware, equipment or accessories required for the Project and shall include, but may not be necessarily limited to the following:

1. Lavatory countertop, complete with sealant, sink, accessories, trim, etc.
2. Flush Wood veneer door
3. Hollow Metal Door Frame
4. Door Hardware
5. Ceramic floor and wall material
6. Vinyl Wall Covering(s)
7. Toilet Compartment complete with partition, side wall, pilaster, door and hardware.
8. Toilet Room Accessories
9. Water closet and trim
10. Urinal and trim
11. Lighting
12. Electrical Devices and Accessories
13. Access Doors or Panels

END OF SECTION

SECTION 01 4516

FIELD TEST FOR WATER LEAKAGE

PART 1 - GENERAL

1.1 SUMMARY

A. Section Includes: Field test to determine resistance to water leakage in wall systems in accordance with performance requirements indicated including joints in adjacent construction which are designed to remain permanently closed and watertight.

B. Contractor will pay costs of testing laboratory for this test.

1.2 DEFINITIONS

A. Water Leakage: Any uncontrolled water that appears on any normally exposed interior surfaces, that is not contained or drained back to exterior, or that can cause damage to adjacent materials or finishes. Water contained within drained flashings, gutters, and sills is not considered water leakage.

1.3 SUBMITTALS

A. Field Quality Control Reports: Written report of testing and inspection required by “Field Quality Control”.

B. Qualification Data: For testing agency.

1. For firms and persons specified in "Quality Assurance" to demonstrate their capabilities and experience. Include lists of completed projects with project names and addresses, names and addresses of Architects and Owners, and other information specified.

1.4 QUALITY ASSURANCE

A. Testing Agency Qualifications: Qualified according to ASTM E 699 for testing indicated.

B. Field Water Spray Testing: Selective field testing will be conducted in accordance with AAMA Standard 501.2: “Quality Assurance and Diagnostic Water Leakage Field Check of Installed Storefronts, Curtainwalls, and Sloped Glazing Systems”.

1. Water Spray Test without Air Pressure Difference: Designated areas shall be tested according to AAMA 501.2 and shall not evidence water penetration.
2. Test shall be performed prior to installation of interior finishes.

C. Field Chamber Testing: Selective field testing will be conducted in accordance with ASTM E 1105 “Standard Test Method for Field Determination of Water Penetration of Installed Exterior Windows, Curtain Walls, and Doors by Uniform or Cyclic Static Air Pressure Difference”.

1. Water Penetration Test with Static Air Pressure Difference: Designated areas shall be tested according to ASTM E 1105 at a minimum static air pressure differential specified for laboratory testing in "Performance Requirements" and shall not evidence water penetration. Field test to full design static pressure differential with no reduction for field installation.
2. Test chamber shall include adjacent joints and interior/exterior construction.

1.5 **CONTRACTOR RESPONSIBILITIES**

A. Cooperate with Testing Agency. Provide labor, materials and equipment, including but not limited to scaffolding, equipment and water supply for use in testing by testing agency personnel.

1. Contractor shall be responsible for coordinating and scheduling testing.
2. Provide powered scaffold, hose, water supply, communication system and manpower to perform tests Schedule any work necessary, such as out of sequence sealant work, so that wall can be tested.

B. Satisfactory results of this test do not relieve Contractor from conforming to requirements of Contract Documents, shop drawings, and project specifications, and installation work on remainder of building shall match area checked, unless otherwise instructed in writing.

C. Pending actual performance, prevalence or absence of water leakage in initial water penetration test, and upon measures adopted by the Contractor to eliminate source of leakage, Architect/ Consultant will determine necessity for, and scope of additional tests and test methods. Remedial measures shall maintain standards of quality and durability and are subject to approval.

D. Remedial measures found necessary and effective in eliminating leakage in area checked shall be used in fabricating and installing remainder of wall on building.

E. Notify Architect/Consultant and testing agency when wall construction is ready for testing.

PART 2 - PRODUCTS

2.1 PERFORMANCE REQUIREMENTS

A. Refer to Technical Sections for performance requirements of each system or product to be tested.

PART 3 - EXECUTION

3.1 EXAMINATION

A. Acceptance of Surfaces and Conditions: Examine substrates to receive products and systems and associated work for compliance with requirements and other conditions affecting performance. Proceed only when unsatisfactory conditions have been corrected in a manner complying with Contract Documents. Starting work within a particular area will be construed as acceptance of surface conditions.

3.2 INSTALLATION, GENERAL

A. Installation Quality Standards: In addition to standards listed elsewhere, perform Work according to following, unless otherwise specified:

1. Respective manufacturer's written installation instructions.
2. Accepted submittals.
3. Contract Documents.

3.3 PREPARATION

A. General: Comply with manufacturer's instructions, recommendations, and specifications for cleaning and surface preparation. Surfaces shall have no defects, contaminants, or errors which would result in poor or potentially defective installation or would cause latent defects in Work.

B. Exterior wall construction shall be completed, and shall be fully glazed to provide complete wall installation. Work shall be done in strict accord with approved shop drawings and job specifications.

3.4 FIELD QUALITY CONTROL TESTING

A. Testing Services, General: Testing and inspecting of representative areas of exterior walls shall take place as installation proceeds to determine compliance of installed assemblies with specified performance requirements.

B. Testing Agency Field Service: Engage a qualified independent testing agency employed by Contractor and approved by Architect to perform field quality control. Materials and installation failing to meet specified requirements shall be replaced at Contractor's expense. Retesting of materials and installations failing to meet specified requirements shall be done at Contractor's expense.

C. Architect shall designate test procedure and areas of completed walls to be checked.

1. Field Testing shall be performed at intervals and locations including but not limited to the following:

a. Field Water Spray Testing per AAMA 501.2: Perform tests at intervals and locations in each test area as directed by Architect; however, not less than 1-percent of total units or 5 units minimum, whichever is greater, shall be tested for each type of glazing system and configuration.

b. Field Chamber Testing per ASTM E 1105: Perform tests at intervals and locations in each test area as directed by Architect; however, not less than 3 static water test minimum, shall be tested for each type of glazing system and configuration.

2. Systems shall be tested in accordance with definitions and at performance requirements indicated in Technical Sections.
3. Test wall at 15-percent, 50-percent, and 75-percent completion unless directed otherwise.

D. All joints or other conditions within designated areas where leakage may occur will be tested.

E. Indoor side of wall in this area shall be unfinished and left open and unobstructed, permitting full length of joints to be examined from indoor side.

F. If operable joints such as those around doors and operable parts of windows occur within wall area involved, appropriate modifications both of procedure and performance requirements will be made in respect to such joints.

3.5 TEST REPORTS

A. Testing laboratory shall be responsible for conducting and reporting tests, shall state in report whether or not test specimen conforms to requirements of Contract Documents approved drawings, and shall specifically note any deviations.

B. Testing laboratory shall submit its report directly to Contractor and Architect. Necessary corrections shall be performed in presence of Architect. Tests shall be witnessed by Architect/Consultant. Approval of test assembly and test results rests with the Architect.

C. Test Reports: Shall be prepared according to testing standard indicated.

3.6 REMEDIAL WORK BY CONTRACTOR

A. In event of failure to initially meet test requirements called for hereinabove, Contractor and respective subcontractors shall, as required, redesign, rework, and/or re-fabricate, reship and re-erect assemblies until said requirements are met, at no additional cost to Owner.

B. Wherever leakage has occurred, joints shall be made watertight in manner acceptable to Architect.

C. Remedial work involving use of curing-type compounds shall be allowed to set for one week before it is re-checked for leakage.

D. After necessary remedial work has been completed, and required curing time, if any, has elapsed, repaired joints shall be retested.

E. Should leakage still be found, further remedial measures shall be taken and checking shall be repeated until joints in designated area are found to be satisfactory.

F. Re-checking, when required, shall be performed by testing laboratory originally employed by Contractor.

END OF SECTION

SECTION 01 5000

TEMPORARY FACILITIES AND CONTROLS

PART 1 - GENERAL

1.1 SUMMARY

A. Section includes requirements for temporary utilities, support facilities, and security and protection facilities.

1.2 USE CHARGES

A. General: Installation and removal of and use charges for temporary facilities shall be included in the Contract Sum. Allow other entities to use temporary services and facilities without cost, including, but not limited to, Owner's construction forces, Architect, occupants of Project, testing agencies, and authorities having jurisdiction.

1. Cost or use charges for temporary facilities are not chargeable to Owner or Architect.

B. Sewer Service: Pay sewer-service use charges for sewer usage, indicated by utility company meter readings, by all entities for construction operations.

C. Water Service: Pay water-service use charges for water used, indicated by utility company meter readings, by all entities for construction operations.

D. Electric Power Service: Pay electric-power-service use charges for electricity used, indicated by utility company meter readings, by all entities for construction operations.

1.3 INFORMATIONAL SUBMITTALS

A. Site Plan: Show temporary facilities, utility hookups, staging areas, and parking areas for construction personnel.

B. Moisture-Protection Plan: Describe procedures and controls for protecting materials and construction from water absorption and damage.

1. Describe delivery, handling, and storage provisions for materials subject to water absorption or water damage.
2. Indicate procedures for discarding water-damaged materials, protocols for mitigating water intrusion into completed Work, and replacing water-damaged Work.
3. Indicate sequencing of work that requires water, such as sprayed fire-resistive materials, plastering, and terrazzo grinding, and describe plans for dealing with water from these operations. Show procedures for verifying that wet construction has dried sufficiently to permit installation of finish materials.

C. Dust- and HVAC-Control Plan at Renovation Work: Submit coordination drawing and narrative that indicates the dust- and HVAC-control measures proposed for use, proposed locations, and proposed time frame for their operation. Identify further options if proposed measures are later determined to be inadequate. Include the following:

1. Locations of dust-control partitions at each phase of work.

2. HVAC system isolation schematic drawing.
3. Location of proposed air-filtration system discharge.
4. Waste handling procedures.
5. Other dust-control measures.

D. Temporary Utility Reports: Make available on request, reports of tests, inspections, meter readings, and similar procedures performed on temporary utilities.

E. Implementation and Termination Schedule: Make available on request a schedule indicating implementation and termination of each temporary utility.

1.4 QUALITY ASSURANCE

A. Standards: Comply with ANSI A10.6 "Requirements for Demolition Operations", NECA's "Temporary Electrical Facilities," and NFPA 241 "Standard for Safeguarding Construction, Alteration, and Demolition Operations".

1. Trade Jurisdictions: Assigned responsibilities for installation and operation of temporary utilities are not intended to interfere with trade regulations and union jurisdictions.

B. Electric Service: Comply with NECA, NEMA, and UL standards and regulations for temporary electric service. Install service to comply with NFPA 70.

C. Tests and Inspections: Arrange for authorities having jurisdiction to test and inspect each temporary utility before use. Obtain required certifications and permits.

D. Accessible Temporary Egress at Renovation Work: Comply with applicable provisions in the U.S. Architectural & Transportation Barriers Compliance Board's ADA-ABA Accessibility Guidelines and ICC/ANSI A117.1.

E. Regulations: Comply with industry standards and applicable laws and regulations of authorities having jurisdiction, including but not limited to, the following:

1. Building Code requirements.
2. Health and safety regulations.
3. Utility company regulations.
4. Police, Fire Department and Rescue Squad rules.
5. Environmental protection regulations.
6. City ordinances and regulations.

1.5 PROJECT CONDITIONS

A. Temporary Use of Permanent Facilities: Engage Installer of each permanent service to assume responsibility for operation, maintenance, and protection of each permanent service during its use as a construction facility before Owner's acceptance, regardless of previously assigned responsibilities.

PART 2 - PRODUCTS

2.1 MATERIALS

A. General: Provide new materials. Undamaged, previously used materials in serviceable condition may be used if approved by Architect. Provide materials suitable for use intended.

B. Materials and equipment may be new or used, but must be adequate in capacity for the required usage, must not create unsafe conditions, and must not violate requirements of applicable codes and standards.

C. Chain-Link Fencing: Minimum 2 inch (50 mm), 0.148 inch (3.8 mm) thick, galvanized-steel, chain-link fabric fencing; minimum 6 feet (1.8 m) high with galvanized-steel pipe posts; minimum 2-3/8 inch (60 mm) OD line posts and 2-7/8 inch (73 mm) OD corner and pull posts, with 1-5/8 inch (42 mm) OD top rails.

D. Portable Chain-Link Fencing: Minimum 2 inch (50 mm), 0.148 inch (3.8 mm) thick, galvanized-steel, chain-link fabric fencing; minimum 6 feet (1.8 m) high with galvanized-steel pipe posts; minimum 2-3/8 inch (60 mm) OD line posts and 2-7/8 inch (73 mm) OD corner and pull posts, with 1-5/8 inch (40 mm) OD top and bottom rails. Provide concrete or galvanized-steel bases for supporting posts.

E. Wood Enclosure Fence: Plywood, 8 feet (2.4 m) high, framed with four 2 by 4 inch (50 by 100 mm) rails, with preservative-treated wood posts spaced not more than 8 feet (2.4 m) apart.

F. Polyethylene Sheet: Reinforced, fire-resistive sheet, 10 mil (0.25 mm) minimum thickness, with flame-spread rating of 15 or less per ASTM E 84 and passing NFPA 701 Test Method 2.

G. Polyethylene Sheet: Reinforced, fire-resistive sheet, 6 mil (0.14 mm) minimum thickness, with Class A flame-spread rating per ASTM E 84 and passing NFPA 701 Test Method 2.

1. Basis of Design (Product Standard): Abatement Technologies, Inc.; SAFE-FLEX ICRA Awareness Barrier.

H. Dust Containment Barrier for Doors: reinforced, fire-resistive polyethylene sheet, 10 mil (0.25 mm) minimum thickness with Class B flame-spread rating per ASTM E 84 and designed to be used for securing temporary construction doors so as to minimize and mitigate particle control during construction.

1. Basis of Design (Product Standard): Abatement Technologies, Inc.; Aire Guardian Door Guard Reusable Barrier.

I. Dust-Control Adhesive-Surface Walk-off Mats: Provide mats minimum 36 by 60 inches (900 by 1500 mm).

J. Insulation: Unfaced mineral-fiber blanket, manufactured from glass, slag wool, or rock wool; with maximum flame-spread and smoke-developed indexes of 25 and 50, respectively.

2.2 TEMPORARY FACILITIES

A. Field Offices, General: Prefabricated or mobile units with serviceable finishes, temperature controls, and foundations adequate for normal loading.

B. Common-Use Field Office: Of sufficient size to accommodate needs of Owner, Architect, and construction personnel office activities and to accommodate Project meetings specified in other Division 01 Sections. Keep office clean and orderly. Furnish and equip offices as follows:

1. Furniture required for Project-site.
2. Conference room of sufficient size to accommodate. Provide electrical power service and 120-V ac duplex receptacles. Furnish room with conference table, chairs, and tack and marker boards.

3. Drinking water and private toilet.
4. Heating and cooling equipment necessary to maintain a uniform indoor.
5. Lighting fixtures capable of maintaining average illumination at desk height.

C. Storage and Fabrication Sheds: Provide sheds sized, furnished, and equipped to accommodate materials and equipment for construction operations.

1. Store combustible materials apart from building.

2.3 EQUIPMENT

A. Fire Extinguishers: Portable, UL rated; with class and extinguishing agent as required by locations and classes of fire exposures.

1. Comply with NFPA 10 and NFPA 241 for classification, extinguishing agent, and size required by location and class of fire exposure.

B. Self-Contained Toilet Units: Single-occupant units of chemical, aerated recirculation, or combustion type; vented; fully enclosed with a glass-fiber-reinforced polyester shell or similar nonabsorbent material.

C. Drinking-Water Fixtures: Containerized, tap-dispenser, bottled-water drinking-water units, including paper cup supply.

D. HVAC Equipment: Unless Owner authorizes use of permanent HVAC system, provide vented, self-contained, liquid-propane-gas or fuel-oil heaters with individual space thermostatic control.

1. Use of gasoline-burning space heaters, open-flame heaters, or salamander-type heating units is prohibited.
2. Heating Units: Listed and labeled for type of fuel being consumed, by a qualified testing agency acceptable to authorities having jurisdiction, and marked for intended location and application.

E. Air-Filtration Units for Renovation Work: Primary and secondary HEPA-filter-equipped portable units with four-stage filtration. Provide single switch for emergency shutoff. Configure to run continuously.

PART 3 - EXECUTION

3.1 INSTALLATION, GENERAL

A. Locate facilities where they will serve Project adequately and result in minimum interference with performance of the Work. Relocate and modify facilities as required by progress of the Work.

B. Provide each facility ready for use when needed to avoid delay. Do not remove until facilities are no longer needed or are replaced by authorized use of completed permanent facilities.

3.2 TEMPORARY UTILITY INSTALLATION

A. Locate temporary utilities where they will serve Project adequately and result in minimum interference with performance of the Work. Relocate and modify utilities as required.

B. Provide each utility ready for use when needed to avoid delay. Maintain and modify as required. Do not remove until utilities are no longer needed or are replaced by authorized use of completed permanent utilities.

C. Engage appropriate local utility company to install temporary service or connect to existing service. Where utility company provides only part of the service, provide the remainder with matching, compatible materials and equipment. Comply with utility company recommendations.

1. Arrange with utility company, Owner, and existing users for time when service can be interrupted, if necessary, to make connections for temporary services.
2. Provide adequate capacity at each stage of construction. Before temporary utility is available, provide trucked-in services.
3. Obtain easements to bring temporary utilities to Project site where Owner's easements cannot be used for that purpose.

D. Storm Sewers and Drainage: If sewers are available, provide temporary connections to remove effluent that can be discharged lawfully. If sewers are not available or cannot be used, provide drainage ditches, dry wells, stabilization ponds, and similar facilities. If neither sewers nor drainage facilities can be lawfully used for discharge of effluent, provide containers to remove and dispose of effluent off-site in a lawful manner.

1. Filter out excessive soil, construction debris, chemicals, oils, and similar contaminants that might clog sewers or pollute waterways before discharge.
2. Connect temporary sewers to municipal system as directed by sewer department officials.
3. Maintain temporary sewers and drainage facilities in a clean, sanitary condition. After heavy use, restore normal conditions promptly.
4. Provide temporary filter beds, settlement tanks, separators, and similar devices to purify effluent to levels acceptable to authorities having jurisdiction.

E. Water Service: Install water service and distribution piping in sizes and pressures adequate for construction. Sterilize temporary water piping before use in accordance with requirements of authorities having jurisdiction.

F. Sanitary Facilities: Provide temporary toilets, wash facilities, and drinking water for use of construction personnel. Comply with requirements of authorities having jurisdiction for type, number, location, operation, and maintenance of fixtures and facilities.

1. Existing Toilets in Occupied Facilities: Use of Owner's existing toilet facilities will not be permitted or allowed.

G. Heating and Cooling: Provide temporary heating and cooling required by construction activities for curing or drying of completed installations or for protecting installed construction from adverse effects of low temperatures or high humidity. Select equipment that will not have a harmful effect on completed installations or elements being installed.

H. Isolation of Work Areas in Occupied Facilities: Prevent dust, fumes, and odors from entering occupied areas.

1. Prior to commencing work, isolate the HVAC system in area where work is to be performed according to coordination drawings.

a. Disconnect supply and return ductwork in work area from HVAC systems servicing occupied areas.

b. Maintain negative air pressure within work area using HEPA-equipped air-filtration units, starting with commencement of temporary partition construction, and continuing until removal of temporary partitions is complete.

2. Maintain dust partitions during the Work. Use vacuum collection attachments on dust-producing equipment. Isolate limited work within occupied areas using portable dust-containment devices.
3. Perform daily construction cleanup and final cleanup using approved, HEPA-filter-equipped vacuum equipment.

I. Ventilation and Humidity Control: Provide temporary ventilation required by construction activities for curing or drying of completed installations or for protecting installed construction from adverse effects of high humidity. Select equipment that will not have a harmful effect on completed installations or elements being installed. Coordinate ventilation requirements to produce ambient condition required and minimize energy consumption.

1. Provide dehumidification systems when required to reduce substrate moisture levels to level required to allow installation or application of finishes.

J. Electric Power Service: Provide electric power service and distribution system of sufficient size, capacity, and power characteristics required for construction operations.

K. Lighting: Provide temporary lighting with local switching that provides adequate illumination for construction operations, observations, inspections, and traffic conditions.

L. Telephone Service: Provide temporary telephone service in common-use facilities for use by all construction personnel. Provide telephone line(s) for each field office.

M. Electronic Communication Service: Provide internet access of not less than 15-Mbps download and 5-Mbps upload speed for use by Architect and Owner to access Project electronic documents and maintain electronic communications

3.3 SUPPORT FACILITIES INSTALLATION

A. General: Comply with the following:

1. Locate field offices, storage sheds, sanitary facilities, and other temporary construction and support facilities for easy access.
2. Maintain support facilities until Architect schedules Substantial Completion inspection. Remove before Substantial Completion. Personnel remaining after Substantial Completion will be permitted to use permanent facilities, under conditions acceptable to Owner.

B. Temporary Roads and Paved Areas: Construct and maintain temporary roads and paved areas adequate to support loads and to withstand exposure to traffic during construction period. Extend temporary roads and paved areas, within construction limits indicated, as necessary for construction operations.

1. Provide dust-control that is nonpolluting and nontracking. Reapply as required to minimize dust.

C. Traffic Controls: Provide temporary traffic controls at junction of temporary roads with public roads. Include warning signs for public traffic and "STOP" signs for entrance onto public roads. Comply with requirements of authorities having jurisdiction.

1. Protect existing site improvements to remain including curbs, pavement, and utilities.
2. Maintain access for fire-fighting equipment and access to fire hydrants.

D. Parking: Coordinated parking with Owner's requirements.

E. Dewatering Facilities and Drains: Comply with requirements of authorities having jurisdiction. Maintain Project site, excavations, and construction free of water.

1. Dispose of rainwater in a lawful manner that will not result in flooding Project or adjoining properties or endanger permanent Work or temporary facilities.
2. Before connection and operation of permanent drainage piping system, provide temporary drainage where roofing or similar construction is completed.
3. Remove snow and ice as required to minimize accumulations.

F. Project Signs: Coordinated signs with Owner's requirements and requirements of authorities having jurisdiction.

G. Waste Disposal Facilities: Comply with requirements specified in Division 01 Section "Construction Waste Management and Disposal."

H. Comply with progress cleaning requirements in Division 01 Section "Execution."

I. Existing Elevator Use in Occupied Facilities: Use of Owner's existing elevators will be permitted, provided elevators are cleaned and maintained in a condition acceptable to Owner. At Substantial Completion, restore elevators to condition existing before initial use, including replacing worn cables, guide shoes, and similar items of limited life.

1. Do not load elevators beyond their rated weight capacity.
2. Provide protective coverings, barriers, devices, signs, or other procedures to protect elevator car and entrance doors and frame. If, despite such protection, elevators become damaged, engage elevator Installer to restore damaged work so no evidence remains of correction work. Return items that cannot be refinished in field to the shop, make required repairs and refinish entire unit, or provide new units as required.

J. Existing Stair Usage in Occupied Facilities: Use of Owner's existing stairs will be permitted, provided stairs are cleaned and maintained in a condition acceptable to Owner. At Substantial Completion, restore stairs to condition existing before initial use.

1. Provide protective coverings, barriers, devices, signs, or other procedures to protect stairs and to maintain means of egress. If stairs become damaged, restore damaged areas so no evidence remains of correction work.

K. Temporary Use of Permanent Stairs: Use of new stairs for construction traffic will be permitted, provided stairs are protected and finishes restored to new condition at time of Substantial Completion.

3.4 SECURITY AND PROTECTION FACILITIES INSTALLATION

A. Protection of Existing Facilities: Protect existing vegetation, equipment, structures, utilities, and other improvements at Project site and on adjacent properties, except those indicated to be removed or altered. Repair damage to existing facilities.

B. Environmental Protection: Provide protection, operate temporary facilities, and conduct construction as required to comply with environmental regulations and that minimize possible air, waterway, and subsoil contamination or pollution or other undesirable effects.

1. Comply with work restrictions specified in Division 01 Section "Summary."

C. Temporary Erosion and Sedimentation Control: Provide measures to prevent soil erosion and discharge of soil-bearing water runoff and airborne dust to undisturbed areas and to adjacent properties and walkways, according to requirements of 2003 EPA Construction General Permit or authorities having jurisdiction, whichever is more stringent.

D. Stormwater Control: Comply with requirements of authorities having jurisdiction. Provide barriers in and around excavations and subgrade construction to prevent flooding by runoff of stormwater from heavy rains.

E. Tree and Plant Protection: Install temporary fencing located as indicated or outside the drip line of trees to protect vegetation from damage from construction operations. Protect tree root systems from damage, flooding, and erosion.

F. Pest Control: Engage pest-control service to recommend practices to minimize attraction and harboring of rodents, roaches, and other pests and to perform extermination and control procedures at regular intervals so Project will be free of pests and their residues at Substantial Completion. Perform control operations lawfully, using environmentally safe materials.

G. Site Enclosure Fence: Before construction operations begin, furnish and install site enclosure fence in a manner that will prevent people and animals from easily entering site except by entrance gates.

1. Extent of Fence: As required to enclose entire Project site or portion determined sufficient to accommodate construction operations.

H. Barricades, Warning Signs, and Lights: Comply with requirements of authorities having jurisdiction for erecting structurally adequate barricades, including warning signs and lighting.

I. Temporary Egress: Maintain temporary egress from existing occupied facilities as indicated and as required by authorities having jurisdiction.

J. Covered Walkway: Erect protective, covered walkway for passage of individuals through or adjacent to Project site. Coordinate with entrance gates, other facilities, and obstructions. Comply with regulations of authorities having jurisdiction and requirements indicated on Drawings.

K. Temporary Enclosures: Provide temporary, weathertight, enclosures for protection of construction, in progress and completed, including, but not limited to, vertical and horizontal openings, from exposure, foul weather, other construction operations, and similar activities.

L. Temporary Partitions: Provide floor-to-ceiling dustproof partitions to limit dust and dirt migration and to separate areas from fumes and noise.

1. Construct dustproof partitions with gypsum wallboard with joints taped on occupied side, and fire-retardant-treated plywood on construction operations side.
2. Construct dustproof partitions with two layers of 6 mil (0.14 mm) polyethylene sheet on each side. Cover floor with two layers of 6 mil (0.14 mm) polyethylene sheet, extending

sheets 18 inches (450 mm) up the sidewalls. Overlap and tape full length of joints. Cover floor with fire-retardant-treated plywood.

a. Construct vestibule and airlock at each entrance through temporary partition with not less than 48 inches (1200 mm) between doors. Maintain walk-off mats in vestibule, for dust control.

3. Where fire-resistance-rated temporary partitions are indicated or are required by authorities having jurisdiction, construct partitions according to the rated assemblies.
4. Seal joints and perimeter. Equip partitions with gasketed dustproof doors and security locks where openings are required.
5. Protect air-handling equipment.
6. Provide walk-off mats at each entrance through temporary partition.

M. Temporary Fire Protection: Install and maintain temporary fire-protection facilities of types needed to protect against reasonably predictable and controllable fire losses. Comply with NFPA 241 and authorities having jurisdiction; manage fire-prevention program.

3.5 MOISTURE CONTROL

A. Contractor's Moisture-Protection Plan: Avoid trapping water in finished work. Document visible signs of discoloration that may appear during construction.

B. Exposed Construction Phase: Before installation of weather barriers, when materials are subject to wetting and exposure, protect as follows:

1. Protect porous materials from water damage.
2. Protect stored and installed material from flowing or standing water.
3. Keep porous and organic materials from coming into prolonged contact with concrete.
4. Remove standing water from decks.
5. Keep deck openings covered or dammed.

C. Partially Enclosed Construction Phase: After installation of weather barriers but before full enclosure and conditioning of building, when installed materials are still subject to infiltration of moisture, protect as follows:

1. Do not load or install drywall or other porous materials or components, or items with high organic content, into partially enclosed building.
2. Keep interior spaces reasonably clean and protected from water damage.
3. Periodically collect and remove waste containing cellulose or other organic matter.
4. Discard or replace water-damaged material.
5. Do not install material that is wet.
6. Discard, replace, or clean stored or installed material that begins to show discoloration.
7. Perform work in a sequence that allows any wet materials adequate time to dry before enclosing the material in drywall or other interior finishes.

D. Controlled Construction Phase of Construction: After completing and sealing of the building enclosure but prior to the full operation of permanent HVAC systems, maintain as follows:

1. Control moisture and humidity inside building by maintaining effective dry-in conditions.
2. Use permanent HVAC system to control humidity.
3. Comply with manufacturer's written instructions for temperature, relative humidity, and exposure to water limits. Refer to technical specification sections for additional and more stringent criteria.

3.6 OPERATION, TERMINATION, AND REMOVAL

A. Supervision: Enforce strict discipline in use of temporary facilities. To minimize waste and abuse, limit availability of temporary facilities to essential and intended uses.

B. Maintenance: Maintain facilities in good operating condition until removal.

1. Maintain operation of temporary enclosures, heating, cooling, humidity control, ventilation, and similar facilities on a 24-hour basis where required to achieve indicated results and to avoid possibility of damage.
2. Maintain markers for underground lines. Protect from damage during excavation operations.

C. Temporary Facility Changeover: Do not change over from using temporary security and protection facilities to permanent facilities until Substantial Completion.

D. Termination and Removal: Remove each temporary facility when need for its service has ended, when it has been replaced by authorized use of a permanent facility, or no later than Substantial Completion. Complete or, if necessary, restore permanent construction that may have been delayed because of interference with temporary facility. Repair damaged Work, clean exposed surfaces, and replace construction that cannot be satisfactorily repaired.

1. Materials and facilities that constitute temporary facilities are property of Contractor.
2. Remove temporary roads and paved areas not intended for or acceptable for integration into permanent construction. Where area is intended for landscape development, remove soil and aggregate fill that do not comply with requirements for fill or subsoil. Remove materials contaminated with road oil, asphalt and other petrochemical compounds, and other substances that might impair growth of plant materials or lawns. Repair or replace street paving, curbs, and sidewalks at temporary entrances, as required by authorities having jurisdiction.
3. At Substantial Completion, repair, renovate, and clean permanent facilities used during construction period. Comply with final cleaning requirements specified in Division 01 Section "Closeout Procedures."

END OF SECTION

SECTION 016000

PRODUCT REQUIREMENTS

PART 1 - GENERAL

1.1 SUMMARY

A. Section includes administrative and procedural requirements for selection of products for use in Project; product delivery, storage, and handling; manufacturers' standard warranties on products; special warranties; and comparable products.

1.2 DEFINITIONS

A. Products: Items obtained for incorporating into the Work, whether purchased for Project or taken from previously purchased stock. The term "product" includes the terms "material," "equipment," "system," and terms of similar intent.

1. Named Products: Items identified by manufacturer's product name, including make or model number or other designation shown or listed in manufacturer's published product literature that is current as of date of the Contract Documents.
2. New Products: Items that have not previously been incorporated into another project or facility. Products salvaged or recycled from other projects are not considered new products.
3. Comparable Product: Product that is demonstrated and approved through submittal process to have the indicated qualities related to type, function, dimension, in-service performance, physical properties, appearance, and other characteristics that equal or exceed those of specified product.

B. Substitutions: Changes in products, materials, and equipment from those required by the Contract Documents and proposed by Contractor. Refer to Division 01 Section “Substitution Procedures”.

C. Basis-of-Design Product Specification: Where a specific manufacturer's product is named and accompanied by the words "Product Standard," including make or model number or other designation, to establish the significant qualities related to type, function, dimension, in-service performance, physical properties, appearance, and other characteristics for purposes of evaluating comparable products of other manufacturers

D. Hazardous Substances Prohibited by Law: Including, but not limited to, any product, material, element, constituent, chemical, substance, compound, or mixture, which is defined in, included under, or regulated by any environmental laws.

E. Environmental Laws: Applicable local, state, and federal laws, rules, ordinances, codes, regulations, and requirements in effect at the time Contractor's services are rendered, any amendments for Contractor's services rendered after the effective date of any such amendments.

1.3 SUBMITTALS

A. Comparable Product: Comply with requirements in Division 01 Section "Submittal Procedures." Show compliance with requirements. Submit request for consideration of each comparable product. Identify product or fabrication or installation method to be replaced. Include Specification Section number and title and Drawing numbers and titles.

B. Basis-of-Design Product Specification Submittal: Comply with requirements in Division 01 Section "Submittal Procedures." Show compliance with requirements.

C. Contractor shall submit an affidavit on construction company letterhead signed by an officer of the company, notarized by a notary public, which certifies compliance with the environmental laws controlling hazardous substances for the construction of this Project.

1.4 QUALITY ASSURANCE

A. Compatibility of Options: If Contractor is given option of selecting between two or more products for use on Project, select product compatible with products previously selected, even if previously selected products were also options.

B. Compliance: Contractor shall take whatever measures deemed necessary to insure that all employees, suppliers, vendors, fabricators, subcontractors, or their assigns, to comply with hazardous substance requirements.

1.5 PRODUCT DELIVERY, STORAGE, AND HANDLING

A. Deliver, store, and handle products using means and methods that will prevent damage, deterioration, and loss, including theft and vandalism. Comply with manufacturer's written instructions.

B. Delivery and Handling:

1. Schedule delivery to minimize long-term storage at Project site and to prevent overcrowding of construction spaces.
2. Coordinate delivery with installation time to ensure minimum holding time for items that are flammable, hazardous, easily damaged, or sensitive to deterioration, theft, and other losses.
3. Deliver products to Project site in an undamaged condition in manufacturer's original sealed container or other packaging system, complete with labels and instructions for handling, storing, unpacking, protecting, and installing.
4. Inspect products on delivery to ensure compliance with the Contract Documents and to ensure that products are undamaged and properly protected.

C. Storage:

1. Store products to allow for inspection and measurement of quantity or counting of units.
2. Store materials in a manner that will not endanger Project structure.

3. Store products that are subject to damage by the elements, under cover in a weathertight enclosure above ground, with ventilation adequate to prevent condensation.
4. Protect foam plastic from exposure to sunlight, except to extent necessary for period of installation and concealment.
5. Comply with product manufacturer's written instructions for temperature, humidity, ventilation, and weather-protection requirements for storage.
6. Protect stored products from damage and liquids from freezing.

1.6 PRODUCT WARRANTIES

A. Warranties specified in other Sections shall be in addition to, and run concurrent with, other warranties required by the Contract Documents. Manufacturer's disclaimers and limitations on product warranties do not relieve Contractor of obligations under requirements of the Contract Documents.

1. Manufacturer's Warranty: Written warranty furnished by individual manufacturer for a particular product, required by the Contract Documents to provide specific rights for Owner, and specifically endorsed by manufacturer to Owner.
2. Warranties: Prepare a written document, on manufacturer’s standard form, modified to include Project-specific information, that contains appropriate terms and identification, properly executed.

B. Submittal Time: Comply with requirements in Division 01 Section "Closeout Procedures."

PART 2 - PRODUCTS

2.1 PRODUCT SELECTION PROCEDURES

A. General Product Requirements: Provide products that comply with the Contract Documents, are undamaged and, unless otherwise indicated, are new at time of installation.

1. Provide products complete with accessories, trim, finish, fasteners, and other items needed for a complete installation and indicated use and effect.
2. Standard Products: If available, and unless custom products or nonstandard options are specified, provide standard products of types that have been produced and used successfully in similar situations on other projects.
3. Owner reserves the right to limit selection to products with warranties not in conflict with requirements of the Contract Documents.
4. Where products are accompanied by the term "as selected," Architect will make selection.
5. Descriptive, performance, and reference standard requirements in the Specifications establish salient characteristics of products.
6. Products and materials brought onto the Project Site, and products and materials incorporated into the Work, shall comply with environmental laws.

B. Product Selection Procedures:

1. Product: Where Specifications name a single manufacturer and product, provide the named product that complies with requirements. Comparable products or substitutions for Contractor's convenience will not be considered.
2. Manufacturer/Source: Where Specifications name a single manufacturer or source, provide a product by the named manufacturer or source that complies with requirements.

Comparable products or substitutions for Contractor's convenience will not be considered.

3. Products:

    a. Restricted List (Acceptable Manufacturers/Fabricators and Products): Where Specifications include a list of names of both manufacturers and products, provide one of the products listed that complies with requirements. Comparable products or substitutions for Contractor's convenience will be considered unless otherwise indicated.
    b. Nonrestricted List (Available Manufacturers/Fabricators and Products): Where Specifications include a list of names of both available manufacturers and products, provide one of the products listed, or an unnamed product, that complies with requirements. Comply with requirements in "Comparable Products" Article for consideration of an unnamed product.

4. Manufacturers:

    a. Restricted List (Acceptable Manufacturers/Fabricators): Where Specifications include a list of manufacturers' names, provide a product by one of the manufacturers listed that complies with requirements. Comparable products or substitutions for Contractor's convenience will be considered unless otherwise indicated.
    b. Nonrestricted List (Available Manufacturers/Fabricators): Where Specifications include a list of available manufacturers, provide a product by one of the manufacturers listed, or a product by an unnamed manufacturer, that complies with requirements. Comply with requirements in "Comparable Products" Article for consideration of an unnamed manufacturer's product.

5. Basis-of-Design Product (Product Standard): Where Specifications name a product, or refer to a product indicated on Drawings, and include a list of manufacturers, provide the specified or indicated product or a comparable product by one of the other named manufacturers. Drawings and Specifications indicate sizes, profiles, dimensions, and other characteristics that are based on the product named. Comply with requirements in "Comparable Products" Article for consideration of an unnamed product by one of the other named manufacturers, or unnamed manufacturer's product.

C. Descriptive Specification Requirements: Where Specifications describe a product, or assembly, listing exact characteristics required, without use of a brand or trade name, provide a product, material or assembly that provides the characteristics and otherwise complies with Contract requirements.

D. Performance Specification Requirements: Where Specifications require compliance with performance requirements, provide products that comply with these requirements, and are recommended by the manufacturer for the application indicated. General overall performance of a product is implied where the product or material is specified for a specific application.

    1. Manufacturer's recommendations may be contained in published product literature, or by the manufacturer's certification of performance.

E. Compliance with Standards, Codes and Regulations: Where Specifications only require compliance with imposed code, standard or regulation, select product that complies with standards, codes or regulations specified.

F. Visual Matching Specification: Where Specifications require "match Architect's sample", provide a product that complies with requirements and matches Architect's sample. Architect's decision will be final on whether a proposed product matches.

1. If no product available within specified category matches and complies with other specified requirements, comply with requirements in Division 01 Section "Substitution Procedures" for proposal of product.

G. Visual Selection Specification: Where Specifications include the phrase "as selected by Architect from manufacturer's color, gloss, pattern, density, or texture" or similar phrase, select a product (and manufacturer) that complies with other specified requirements.

1. Standard Range: Where Specifications include the phrase "standard range of colors, patterns, textures" or similar phrase, Architect will select color, pattern, or texture from manufacturer's product line that does not include premium items.
2. Custom Range: Where Specifications include the phrase "custom range of colors, patterns, textures" or similar phrase, Architect will select color, pattern, or texture from manufacturer's product line that includes both standard and premium items.
3. Special Custom Range: Where Specifications include the phrase “special custom range of colors patterns, textures” or similar phrase, Architect will select a new color, pattern, or texture different from those normally produced by the manufacturer.

A. Allowances (If Applicable): Refer to provisions of individual Specification Sections and of Division 01 Section "Allowance" for allowances that control product selection and for procedures required for processing such selections.

2.2 COMPARABLE PRODUCTS

A. Conditions for Consideration: Architect will consider Contractor's request for comparable product when the following conditions are satisfied. If the following conditions are not satisfied, Architect may return requests without action, except to record noncompliance with these requirements:

1. Evidence that the proposed product does not require revisions to the Contract Documents; that it is consistent with the Contract Documents and will produce the indicated results, and that it is compatible with other portions of the Work.
2. Detailed comparison of significant qualities of proposed product with those named in the Specifications. Significant qualities include attributes such as performance, weight, size, durability, visual effect, and specific features and requirements indicated.
3. Evidence that proposed product provides specified warranty.
4. List of similar installations for completed projects with project names and addresses and names and addresses of architects and owners, if requested.
5. Samples, if requested.

PART 3 - EXECUTION

3.1 RESTRICTION OF HAZARDOUS SUBSTANCES

A. Contractor agrees that it shall not knowingly after reasonable diligence and effort, incorporate into the Work any hazardous substance other than as may be lawfully contained within products, except in accordance with applicable environmental laws. Further, in performing any of its obligations hereunder, Contractor shall not cause any release of hazardous substances into, or contamination of, the environment, including soil, the atmosphere, any watercourse or ground water, except in accordance with applicable environmental laws. In the event that Contractor engages in any of the activities prohibited in this paragraph, to the fullest extent permitted by law, Contractor hereby indemnifies and holds harmless Owner and its partners, members, officers, directors, agents, employees and consultants from and against any and all claims, damages, losses, causes of action, suits and liabilities of every kind, including, but not limited to, expenses of litigation, court costs, punitive damages and attorney's fees, arising out of, incidental to or resulting from the activities prohibited.

B. In the event Contractor observes on the Project Site any substance which Contractor reasonably believes to be a hazardous substance, and which is being introduced into the Work, or exists on the Project Site, in a manner violative of any applicable environmental laws, Contractor shall immediately notify Owner and report the condition to Owner in writing. The Work in the affected area shall not thereafter be resumed except by written authorization of Owner if in fact a hazardous substance has been encountered and has not been rendered harmless. In the event that Contractor fails to give Owner proper notification hereunder, upon knowingly observing a hazardous substance at the Project Site, to the fullest extent permitted by the law, Contractor hereby indemnifies and holds harmless Owner, and all of its partners, members, officers, directors, agents, employees and consultants from and against all claims, damages, losses, causes of action, suits and liabilities of every kind, including, but not limited to, expenses of litigation, court costs, punitive damages and attorneys' fees, arising out of, incidental to, or resulting from Contractor's failure to stop the Work.

C. If Owner believes that hazardous substances may have been located, generated, manufactured, used or disposed of on or about the Project Site by Contractor or any of its employees, agents, subcontractors, suppliers, or invitees, Owner may have environmental studies of the Project Site conducted as it deems appropriate, and Contractor shall be responsible for the cost of such studies to the extent that Contractor or any of its employees, agents, subcontractors, suppliers or invitees are responsible for the presence of any hazardous substances.

END OF SECTION

SECTION 01 7300

EXECUTION

PART 1 - GENERAL

1.1 SUMMARY

A. Section includes general administrative and procedural requirements governing execution of the Work including, but not limited to, the following:

1. Construction layout.
2. Field engineering and surveying.
3. Installation of the Work.
4. Cutting and patching.
5. Coordination of Owner-installed products.
6. Progress cleaning.
7. Starting and adjusting.
8. Protection of installed construction.
9. Correction of the Work.

1.2 DEFINITIONS

A. Cutting: Removal of in-place construction necessary to permit installation or performance of other work.

B. Patching: Fitting and repair work required to restore construction to original conditions after installation of other work.

1.3 SUBMITTALS

A. Qualification Data: For land surveyor or professional engineer.

B. Certificates: Submit certificate signed by land surveyor or professional engineer certifying that location and elevation of improvements comply with requirements.

C. Cutting and Patching Plan: Submit plan describing procedures at least 10 days prior to the time cutting and patching will be performed, requesting approval to proceed. Include the following information:

1. Extent: Describe reason for and extent of each occurrence of cutting and patching.
2. Changes to In-Place Construction: Describe anticipated results. Include changes to structural elements and operating components as well as changes in building appearance and other significant visual elements.
3. Products: List products to be used for patching and firms or entities that will perform patching work.
4. Dates: Indicate when cutting and patching will be performed.

5. Utilities and Mechanical and Electrical Systems: List services and systems that cutting and patching procedures will disturb or affect. List services and systems that will be relocated and those that will be temporarily out of service. Indicate length of time permanent services and systems will be disrupted.

    a. Include description of provisions for temporary services and systems during interruption of permanent services and systems.

6. Structural Elements: Where cutting and patching involve adding reinforcement to structural elements, submit details and engineering calculations showing integration of reinforcement with original structure.
7. Architect's Approval: Obtain approval of cutting and patching proposal before cutting and patching. Approval does not waive right to later require removal and replacement of unsatisfactory work.

D. Certified Surveys: Submit two copies signed by land surveyor or professional engineer.

E. Final Property Survey: Submit 6 copies showing the Work performed and record survey data.

1.4 QUALITY ASSURANCE

A. Land Surveyor Qualifications: A professional land surveyor or engineer who is legally qualified to practice in jurisdiction where Project is located and who is experienced in providing land-surveying services of the kind indicated.

B. Cutting and Patching: Comply with requirements for and limitations on cutting and patching of construction elements.

1. Structural Elements: Do not cut and patch structural elements in a manner that could change their load-carrying capacity or increase deflection
2. Operational Elements: Do not cut and patch operating elements and related components in a manner that results in reducing their capacity to perform as intended or that results in increased maintenance or decreased operational life or safety.
3. Miscellaneous Elements: Do not cut and patch other construction elements or components in a manner that could change their load-carrying capacity, that results in reducing their capacity to perform as intended, or that results in increased maintenance or decreased operational life or safety.
4. Visual Elements: Do not cut and patch construction in a manner that results in visual evidence of cutting and patching. Do not cut and patch exposed construction on the exterior or in occupied spaces in a manner that would, in Architect's opinion, reduce the building's aesthetic qualities. Remove and replace construction that has been cut and patched in a visually unsatisfactory manner.

    a. If possible, retain original Installer or fabricator to cut and patch exposed Work listed below. If it is impossible to engage original Installer or fabricator, engage another recognized, experienced, and specialized firm.

C. Cutting and Patching Conference: Before proceeding, meet at Project site with parties involved in cutting and patching, including mechanical and electrical trades. Review areas of potential interference and conflict. Coordinate procedures and resolve potential conflicts before proceeding.

D. Manufacturer's Installation Instructions: Obtain and maintain on-site manufacturer's written recommendations and instructions for installation of products and equipment.

1.5 WARRANTY

A. Existing Warranties: Remove, replace, patch, and repair materials and surfaces cut or damaged during cutting and patching operations, by methods and with materials so as not to void existing warranties.

PART 2 - PRODUCTS

2.1 MATERIALS

A. General: Comply with requirements specified in other Sections.

1. For projects requiring compliance with sustainable design and construction practices and procedures, use products for patching that comply with requirements in Division 01 sustainable construction requirements Section.

B. In-Place Materials: Use materials for patching identical to in-place materials. For exposed surfaces, use materials that visually match in-place adjacent surfaces to the fullest extent possible.

1. If identical materials are unavailable or cannot be used, use materials that, when installed, will provide a match acceptable to Architect for the visual and functional performance of in-place materials.

PART 3 - EXECUTION

3.1 EXAMINATION

A. Existing Conditions: The existence and location of underground and other utilities and construction indicated as existing are not guaranteed. Before beginning sitework, investigate and verify the existence and location of underground utilities~~,~~ and other construction affecting the Work.

1. Before construction, verify the location and invert elevation at points of connection of sanitary sewer, storm sewer, and water-service piping; underground electrical services, and other utilities.
2. Furnish location data for work related to Project that must be performed by public utilities serving Project site.

B. Acceptance of Surfaces and Conditions: Examine substrates to receive products and systems and associated work for compliance with requirements and other conditions affecting performance. Proceed only when unsatisfactory conditions have been corrected in a manner complying with Contract Documents. Starting work within a particular area will be construed as acceptance of surface conditions. Record observations.

1. Examine roughing-in for mechanical and electrical systems to verify actual locations of connections before equipment and fixture installation.
2. Examine walls, floors, and roofs for suitable conditions where products and systems are to be installed.
3. Verify compatibility with and suitability of substrates, including compatibility with existing finishes or primers.

3.2 INSTALLATION, GENERAL

A. Installation Quality Standards: In addition to standards listed elsewhere, perform Work according to following, unless otherwise specified:

1. Respective manufacturer/fabricator's written installation instructions.
2. Accepted submittals.
3. Contract Documents.

B. Control of Corrosion: Prevent galvanic action and other forms of corrosion by isolating metals and other materials from direct contact with incompatible materials.

3.3 PREPARATION

A. General: Comply with manufacturer's instructions, recommendations, and specifications for cleaning and surface preparation. Surfaces shall have no defects, contaminants, or errors which would result in poor or potentially defective installation or would cause latent defects in Work.

B. Existing Utility Information: Furnish information to local utility that is necessary to adjust, move, or relocate existing utility structures, utility poles, lines, services, or other utility appurtenances located in or affected by construction. Coordinate with authorities having jurisdiction.

A. Existing Utility Interruptions at Renovation Work: Do not interrupt utilities serving facilities occupied by Owner or others unless permitted under the following conditions and then only after arranging to provide temporary utility services according to requirements indicated:

1. Notify Owner not less than 72 hours in advance of proposed utility interruptions.
2. Do not proceed with utility interruptions without Owner's written permission.

D. Field Measurements: Take field measurements as required to fit the Work properly. Recheck measurements before installing each product. Where portions of the Work are indicated to fit to other construction, verify dimensions of other construction by field measurements before fabrication. Coordinate fabrication schedule with construction progress to avoid delaying the Work.

E. Space Requirements: Verify space requirements and dimensions of items shown diagrammatically on Drawings.

F. Review of Contract Documents and Field Conditions: Immediately on discovery of the need for clarification of the Contract Documents caused by differing field conditions outside the control of Contractor, submit a request for information to Architect according to requirements in Division 01 Section "Project Management and Coordination."

3.4 CONSTRUCTION LAYOUT

A. Verification: Before proceeding to lay out the Work, verify layout information shown on Drawings, in relation to the property survey and existing benchmarks. If discrepancies are discovered, notify Architect promptly.

B. General: Engage a land surveyor or professional engineer to lay out the Work using accepted surveying practices.

1. Establish benchmarks and control points to set lines and levels at each story of construction and elsewhere as needed to locate each element of Project.
2. Establish dimensions within tolerances indicated. Do not scale Drawings to obtain required dimensions.
3. Inform installers of lines and levels to which they must comply.
4. Check the location, level and plumb, of every major element as the Work progresses.
5. Notify Architect when deviations from required lines and levels exceed allowable tolerances.
6. Close site surveys with an error of closure equal to or less than the standard established by authorities having jurisdiction.

C. Site Improvements: Locate and lay out site improvements, including pavements, grading, fill and topsoil placement, utility slopes, and rim and invert elevations.

D. Building Lines and Levels: Locate and lay out control lines and levels for structures, building foundations, column grids, and floor levels, including those required for mechanical and electrical work. Transfer survey markings and elevations for use with control lines and levels. Level foundations and piers from two or more locations.

E. Record Log: Maintain a log of layout control work. Record deviations from required lines and levels. Include beginning and ending dates and times of surveys, weather conditions, name and duty of each survey party member, and types of instruments and tapes used. Make the log available for reference by Architect.

3.5 FIELD ENGINEERING

A. Reference Points: Locate existing permanent benchmarks, control points, and similar reference points before beginning the Work. Preserve and protect permanent benchmarks and control points during construction operations.

1. Do not change or relocate existing benchmarks or control points Report lost or destroyed permanent benchmarks or control points promptly. Report the need to relocate permanent benchmarks or control points to Architect before proceeding.
2. Replace lost or destroyed permanent benchmarks and control points promptly. Base replacements on the original survey control points.

B. Benchmarks: Establish and maintain a minimum of 2 permanent benchmarks on Project site, referenced to data established by survey control points. Comply with authorities having jurisdiction for type and size of benchmark.

1. Record benchmark locations, with horizontal and vertical data, on Project Record Documents.
2. Where the actual location or elevation of layout points cannot be marked, provide temporary reference points sufficient to locate the Work.
3. Remove temporary reference points when no longer needed. Restore marked construction to its original condition.

C. Certified Survey: 30 days after completion of each work component/activity, including, but not limited to, foundation walls, major site improvements, and other work requiring field-engineering services, prepare a certified survey showing dimensions, locations, angles, and elevations of construction and sitework.

D. Final Property Survey: Engage a land surveyor or professional engineer to prepare a final property survey showing significant features (real property) for Project. Include on the survey a

certification, signed by land surveyor or professional engineer, that principal metes, bounds, lines, and levels of Project are accurately positioned as shown on the survey.

1. Show boundary lines, monuments, streets, site improvements and utilities, existing improvements and significant vegetation, adjoining properties, acreage, grade contours, and the distance and bearing from a site corner to a legal point.
2. Recording: At Substantial Completion, have the final property survey recorded by or with authorities having jurisdiction as the official "property survey."

3.6 INSTALLATION

A. General: Locate the Work and components of the Work accurately, in correct alignment and elevation, as indicated.

1. Make vertical work plumb and make horizontal work level.
2. Where space is limited, install components to maximize space available for maintenance and ease of removal for replacement.
3. Conceal pipes, ducts, and wiring in finished areas unless otherwise indicated.

B. Comply with manufacturer's written instructions and recommendations for installing products in applications indicated, unless indicated otherwise in the Contract Documents.

C. Install products at the time and under conditions that will ensure the best possible results. Maintain conditions required for product performance until Substantial Completion.

D. Conduct construction operations so no part of the Work is subjected to damaging operations or loading in excess of that expected during normal conditions of occupancy.

E. Sequence the Work and allow adequate clearances to accommodate movement of construction items on site and placement in permanent locations.

F. Tools and Equipment: Do not use tools or equipment that produce harmful noise levels.

G. Templates: Obtain and distribute to the parties involved templates for work specified to be factory prepared and field installed. Check Shop Drawings of other work to confirm that adequate provisions are made for locating and installing products to comply with indicated requirements.

H. Attachment: Provide blocking and attachment plates and anchors and fasteners of adequate size and number to securely anchor each component in place, accurately located, aligned, and coordinated with other portions of the Work. Where size and type of attachments are not indicated, verify size and type required for load conditions.

1. Mounting Heights: Where mounting heights are not indicated, mount components at heights directed by Architect.
2. Allow for building movement, including thermal expansion and contraction.
3. Coordinate installation of anchorages. Furnish setting drawings, templates, and directions for installing anchorages, including sleeves, concrete inserts, anchor bolts, and items with integral anchors, that are to be embedded in concrete or masonry. Deliver such items to Project site in time for installation.

I. Joints: Make joints of uniform width. Where joint locations in exposed work are not indicated, arrange joints for the best visual effect. Fit exposed connections together to form hairline joints.

J. Hazardous Materials: Use products, cleaners, and installation materials that are not considered hazardous.

3.7 CUTTING AND PATCHING

A. Cutting and Patching, General: Employ skilled workers to perform cutting and patching. Proceed with cutting and patching at the earliest feasible time, and complete without delay.

1. Cut in-place construction to provide for installation of other components or performance of other construction, and subsequently patch as required to restore surfaces to their original condition.

B. Existing Warranties: Remove, replace, patch, and repair materials and surfaces cut or damaged during installation or cutting and patching operations, by methods and with materials so as not to void existing warranties.

C. Temporary Support: Provide temporary support of work to be cut.

D. Protection: Protect in-place construction during cutting and patching to prevent damage. Provide protection from adverse weather conditions for portions of Project that might be exposed during cutting and patching operations.

E. Adjacent Occupied Areas: Where interference with use of adjoining areas or interruption of free passage to adjoining areas is unavoidable, coordinate cutting and patching according to requirements in Division 01 Section "Summary."

F. Existing Utility Services and Mechanical/Electrical Systems: Where existing services/systems are required to be removed, relocated, or abandoned, bypass such services/systems before cutting to prevent interruption to occupied areas.

G. Cutting: Cut in-place construction by sawing, drilling, breaking, chipping, grinding, and similar operations, including excavation, using methods least likely to damage elements retained or adjoining construction. If possible, review proposed procedures with original Installer; comply with original Installer's written recommendations.

1. In general, use hand or small power tools designed for sawing and grinding, not hammering and chopping. Cut holes and slots neatly to minimum size required, and with minimum disturbance of adjacent surfaces. Temporarily cover openings when not in use.
2. Finished Surfaces: Cut or drill from the exposed or finished side into concealed surfaces.
3. Concrete and Masonry: Cut using a cutting machine, such as an abrasive saw or a diamond-core drill.

4. Excavating and Backfilling: Comply with requirements in applicable Division 31 Sections where required by cutting and patching operations.
5. Mechanical and Electrical Services: Cut off pipe or conduit in walls or partitions to be removed. Cap, valve, or plug and seal remaining portion of pipe or conduit to prevent entrance of moisture or other foreign matter after cutting.
6. Proceed with patching after construction operations requiring cutting are complete.

H. Patching: Patch construction by filling, repairing, refinishing, closing up, and similar operations following performance of other work. Patch with durable seams that are as invisible as practicable. Provide materials and comply with installation requirements specified in other Sections, where applicable.

1. Inspection: Where feasible, test and inspect patched areas after completion to demonstrate physical integrity of installation.
2. Exposed Finishes: Restore exposed finishes of patched areas and extend finish restoration into retained adjoining construction in a manner that will minimize evidence of patching and refinishing.

    a. Clean piping, conduit, and similar features before applying paint or other finishing materials.
    b. Restore damaged pipe covering to its original condition.

3. Floors and Walls: Where walls or partitions that are removed extend one finished area into another, patch and repair floor and wall surfaces in the new space. Provide an even surface of uniform finish, color, texture, and appearance. Remove in-place floor and wall coverings and replace with new materials, if necessary, to achieve uniform color and appearance.

    a. Where patching occurs in a painted surface, prepare substrate and apply primer and intermediate paint coats appropriate for substrate over the patch, and apply final paint coat over entire unbroken surface containing the patch. Provide additional coats until patch blends with adjacent surfaces.
    b. Patch fire rated assemblies with materials to match existing and maintain assembly fire rating.

4. Ceilings: Patch, repair, or rehang in-place ceilings as necessary to provide an even-plane surface of uniform appearance.
5. Exterior Building Enclosure: Patch components in a manner that restores enclosure to a weathertight condition and ensures thermal and moisture integrity of building enclosure.

I. Cleaning: Clean areas and spaces where cutting and patching are performed. Remove paint, **mortar, oils, putty, and similar materials from adjacent finished surfaces.**

3.8 OWNER-INSTALLED PRODUCTS

A. Site Access: As applicable, provide access to Project site for Owner's construction personnel.

B. Coordination: Coordinate construction and operations of the Work with work performed by Owner's construction personnel.

1. Construction Schedule: Inform Owner of Contractor's preferred construction schedule for Owner's portion of the Work. Adjust construction schedule based on a mutually agreeable timetable. Notify Owner if changes to schedule are required due to differences in actual construction progress.
2. Preinstallation Conferences: Include Owner's construction personnel at preinstallation conferences covering portions of the Work that are to receive Owner's work. Attend preinstallation conferences conducted by Owner's construction personnel if portions of the Work depend on Owner's construction.

3.9 PROGRESS CLEANING

A. General: Clean Project site and work areas daily, including common areas. Enforce requirements strictly. Dispose of materials lawfully.

1. Comply with requirements in NFPA 241 for removal of combustible waste materials and debris.

2. Do not hold waste materials more than 7 days during normal weather or 3 days if the temperature is expected to rise above 80 deg F (27 deg C).
3. Containerize hazardous and unsanitary waste materials separately from other waste. Mark containers appropriately and dispose of legally, according to regulations.

    a. Use containers specifically intended for holding types of waste materials indentified where applicable, e.g. blue colored containers with labeling and symbols for bio-waste.

B. Site: Maintain Project site free of waste materials and debris.

C. Work Areas: Clean areas where work is in progress to the level of cleanliness necessary for proper execution of the Work.

1. Remove liquid spills immediately.
2. Where dust would impair proper execution of the Work, broom-clean or vacuum the entire work area, as appropriate.

D. Installed Work: Keep installed work clean. Clean installed surfaces according to written instructions of manufacturer or fabricator of product installed, using only cleaning materials specifically recommended. If specific cleaning materials are not recommended, use cleaning materials that are not hazardous to health or property and that will not damage exposed surfaces.

E. Concealed Spaces: Remove debris from concealed spaces before enclosing the space.

F. Exposed Surfaces in Finished Areas: Clean exposed surfaces and protect as necessary to ensure freedom from damage and deterioration at time of Substantial Completion.

G. Waste Disposal: Do not bury or burn waste materials on-site. Do not wash waste materials down sewers or into waterways. Comply with waste disposal requirements in Division 01 Section "Temporary Facilities and Controls." and Division 01 Section "Construction Waste Management and Disposal", whichever is the more restrictive.

H. Remove construction markings not required and graffiti immediately, repairing or replacing damaged material.

I. During handling and installation, clean and protect construction in progress and adjoining materials already in place. Apply protective covering where required to ensure protection from damage or deterioration at Substantial Completion.

J. Clean and provide maintenance on completed construction as frequently as necessary through the remainder of the construction period. Adjust and lubricate operable components to ensure operability without damaging effects.

K. Limiting Exposures: Supervise construction operations to assure that no part of the construction, completed or in progress, is subject to harmful, dangerous, damaging, or otherwise deleterious exposure during the construction period.

3.10 STARTING AND ADJUSTING

A. As applicable, coordinate startup and adjusting of equipment and operating components with commissioning requirements in Division 01 specification sections.

B. Start equipment and operating components to confirm proper operation. Remove malfunctioning units, replace with new units, and retest.

C. Adjust equipment for proper operation. Adjust operating components for proper operation without binding.

D. Test each piece of equipment to verify proper operation. Test and adjust controls and safeties. Replace damaged and malfunctioning controls and equipment.

E. Manufacturer's Field Service: Comply with qualification requirements in Division 01 Section "Quality Requirements."

3.11 PROTECTION OF INSTALLED CONSTRUCTION

A. Provide final protection and maintain conditions that ensure installed Work is without damage or deterioration at time of Substantial Completion.

B. Comply with manufacturer's written instructions for temperature and relative humidity.

END OF SECTION

SECTION 01 7419

CONSTRUCTION WASTE MANAGEMENT AND DISPOSAL

PART 1 - GENERAL

1.1 SUMMARY

A. Section includes administrative and procedural requirements for the following:

1. Salvaging and/or recycling nonhazardous demolition and construction waste.
2. Disposing of nonhazardous construction waste.

1.2 DEFINITIONS

A. Construction Waste: Building and site improvement materials and other solid waste resulting from construction, remodeling, renovation, or repair operations. Construction waste includes packaging.

B. Disposal: Removal off-site of demolition and construction waste and subsequent sale, recycling, reuse, or deposit in landfill or incinerator acceptable to authorities having jurisdiction.

C. Salvage / Recycle: Recovery of demolition or construction waste for subsequent processing in preparation for reuse.

1.3 PERFORMANCE REQUIREMENTS

A. General: Achieve end-of-Project rates for salvage/recycling of 50 percent by weight of total non-hazardous solid waste generated by the Work. Practice efficient waste management in the use of materials in the course of the Work. Use all reasonable means to divert construction and demolition waste from landfills and incinerators. Facilitate recycling and salvage of materials.

1.4 SUBMITTALS

A. Waste Management Plan: Submit plan within 30 days of date established for commencement of the Work.

B. Waste Reduction Progress Reports: Concurrent with each Application for Payment, submit report. Include the following information:

1. Material category.
2. Generation point of waste.
3. Total quantity of waste in tons (tonnes).
4. Total quantity of waste recovered (salvaged plus recycled) in tons (tonnes).
5. Total quantity of waste recovered (salvaged plus recycled) as a percentage of total waste.

C. Waste Reduction Calculations: Before request for Substantial Completion, submit calculated end-of-Project rates for salvage, recycling, and disposal as a percentage of total waste generated by the Work.

D. Recycling and Processing Facility Records: Indicate receipt and acceptance of recyclable waste by recycling and processing facilities licensed to accept them. Include manifests, weight tickets, receipts, and invoices.

E. Landfill and Incinerator Disposal Records: Indicate receipt and acceptance of waste by landfills and incinerator facilities licensed to accept them. Include manifests, weight tickets, receipts, and invoices.

F. Submittal: Letter signed by Contractor, tabulating total waste material, quantities diverted and means by which it is diverted, and statement that requirements have been met.

1.5 QUALITY ASSURANCE

A. Regulatory Requirements: Comply with hauling and disposal regulations of authorities having jurisdiction.

B. Waste Management Conference: Conduct conference at Project site to comply with requirements in Division 01 Section "Project Management and Coordination." Review methods and procedures related to waste management including, but not limited to, the following:

1. Review and discuss waste management plan.
2. Review requirements for documenting quantities of each type of waste and its disposition.
3. Review and finalize procedures for materials separation and verify availability of containers and bins needed to avoid delays.
4. Review procedures for periodic waste collection and transportation to recycling and disposal facilities.
5. Review waste management requirements for each trade.

1.6 WASTE MANAGEMENT PLAN

A. General: Develop a waste management plan according to ASTM E 1609 and requirements of this Section. Plan shall consist of waste identification, waste reduction work plan, and cost/revenue analysis. Indicate quantities by weight or volume, but use same units of measure throughout waste management plan.

B. Waste Identification: Indicate anticipated types and quantities of site-clearing and construction waste generated by the Work. Include estimated quantities and assumptions for estimates.

C. Waste Reduction Work Plan: List each type of waste and whether it will be salvaged, recycled, or disposed of in landfill or incinerator. Include points of waste generation, total quantity of each type of waste, quantity for each means of recovery, and handling and transportation procedures.

1. Recycled Materials: Include list of local receivers and processors and type of recycled materials each will accept. Include names, addresses, and telephone numbers.
2. Disposed Materials: Indicate how and where materials will be disposed of. Include name, address, and telephone number of each landfill and incinerator facility.
3. Handling and Transportation Procedures: Include method that will be used for separating recyclable waste including sizes of containers, container labeling, and designated location on Project site where materials separation will be located.

D. Cost/Revenue Analysis: Indicate total cost of waste disposal as if there was no waste management plan and net additional cost or net savings resulting from implementing waste management plan. Include the following:

1. Total quantity of waste.
2. Estimated cost of disposal (cost per unit). Include hauling and tipping fees and cost of collection containers for each type of waste.
3. Total cost of disposal (with no waste management).
4. Revenue from salvaged / recycled materials.
5. Savings in hauling and tipping fees that are avoided.
6. Handling and transportation costs. Include cost of collection containers for each type of waste.
7. Net additional cost or net savings from waste management plan.

PART 2 - PRODUCTS (Not Used)

PART 3 - EXECUTION

3.1 PLAN IMPLEMENTATION

A. General: Implement approved waste management plan. Provide handling, containers, storage, signage, transportation, and other items as required to implement waste management plan during the entire duration of the Contract.

1. Comply with Division 01 Section "Temporary Facilities and Controls" for operation, termination, and removal requirements.

B. Site Access and Temporary Controls: Conduct waste management operations to ensure minimum interference with roads, streets, walks, walkways, and other adjacent occupied and used facilities.

1. Designate and label specific areas on Project site necessary for separating materials that are to be salvaged, recycled, reused, donated, and sold.
2. Comply with Division 01 Section "Temporary Facilities and Controls" for controlling dust and dirt, environmental protection, and noise control.

3.2 RECYCLING CONSTRUCTION WASTE

A. Preparation of Waste: Prepare and maintain recyclable waste materials according to recycling or reuse facility requirements. Maintain materials free of dirt, adhesives, solvents, petroleum contamination, and other substances deleterious to the recycling process.

3.3 DISPOSAL OF WASTE

A. General: Except for items or materials to be salvaged, recycled, or otherwise reused, remove waste materials from Project site and legally dispose of them in a landfill or incinerator acceptable to authorities having jurisdiction.

1. Except as otherwise specified, do not allow waste materials that are to be disposed of accumulate on-site.

2. Remove and transport debris in a manner that will prevent spillage on adjacent surfaces and areas.

B. Burning: Do not burn waste materials.

C. Disposal: Transport waste materials off Owner's property and legally dispose of them.

END OF SECTION

SECTION 01 7700

CLOSEOUT PROCEDURES

PART 1 - GENERAL

1.1 SUMMARY

A. Section includes administrative and procedural requirements for contract closeout, including, but not limited to, the following:

1. Substantial Completion procedures.
2. Final completion procedures.
3. Warranties.
4. Final cleaning.
5. Repair of the Work.

1.2 SUBMITTALS

A. Contractor's List of Incomplete Items: Initial submittal at Substantial Completion.

B. Certified List of Incomplete Items: Final submittal at Final Completion.

C. Certificates of Release: From authorities having jurisdiction.

D. Certificate of Insurance: For continuing coverage.

E. Field Report: For pest control inspection.

F. Schedule of Maintenance Material Items: For maintenance material submittal items specified in other Sections.

1.3 SUBSTANTIAL COMPLETION PROCEDURES

A. Contractor's List of Incomplete Items: Prepare and submit a list of items to be completed and corrected (Contractor's punch list), indicating the value of each item on the list and reasons why the Work is incomplete.

B. Submittals Prior to Substantial Completion: Complete the following prior to requesting inspection for determining date of Substantial Completion. List items below that are incomplete at time of request.

1. Certificates of Release: Obtain and submit releases from authorities having jurisdiction permitting Owner unrestricted use of the Work and access to services and utilities. Include occupancy permits, operating certificates, and similar releases.
2. Submit closeout submittals specified in other Division 01 Sections, including project record documents, operation and maintenance manuals, final completion construction photographic documentation, damage or settlement surveys, property surveys, and similar final record information.
3. Submit closeout submittals specified in individual Divisions 02 through 33 Sections, including specific warranties, workmanship bonds, maintenance service agreements, final certifications, and similar documents.

4. Submit maintenance material submittals specified in individual Divisions 02 through 33 Sections, including tools, spare parts, extra materials, and similar items, and deliver to location designated by Architect. Label with manufacturer's name and model number where applicable.

    a. Schedule of Maintenance Material Items: Prepare and submit schedule of maintenance material submittal items, including name and quantity of each item and name and number of related Specification Section. Obtain Owner’s signature for receipt of submittals.

5. Submit test/adjust/balance records.

C. Procedures Prior to Substantial Completion: Complete the following prior to requesting inspection for determining date of Substantial Completion. List items below that are incomplete at time of request.

1. Advise Owner of pending insurance changeover requirements.
2. Make final changeover of permanent locks and deliver keys to Owner. Advise Owner's personnel of changeover in security provisions.
3. Complete startup and testing of systems and equipment.
4. Perform preventive maintenance on equipment used prior to Substantial Completion.
5. Instruct Owner's personnel in operation, adjustment, and maintenance of products, equipment, and systems. Submit demonstration and training video recordings specified in Division 01 Section "Demonstration and Training."
6. Advise Owner of changeover in heat and other utilities.
7. Participate with Owner in conducting inspection and walkthrough with local emergency responders.
8. Terminate and remove temporary facilities from Project site, along with mockups, construction tools, and similar elements.
9. Complete final cleaning requirements, including touchup painting.
10. Touch up and otherwise repair and restore marred exposed finishes to eliminate visual defects.

D. Inspection: Submit a written request for inspection to determine Substantial. On receipt of request, Architect will either proceed with inspection or notify Contractor of unfulfilled requirements. Architect will prepare the Certificate of Substantial Completion after inspection or will notify Contractor of items, either on Contractor's list or additional items identified by Architect, that must be completed or corrected before certificate will be issued.

1. Reinspection: Request, in writing, reinspection when the Work identified in previous inspections as incomplete is completed or corrected.
2. Results of completed inspection will form the basis of requirements for final completion.

E. Warranties required by the Contract Documents shall commence on the date of Substantial Completion of the Work or designated portion thereof unless otherwise provided in the Certificate of Substantial Completion.

1.4 FINAL COMPLETION PROCEDURES

A. Submittals Prior to Final Completion: Before requesting final inspection for determining final completion, complete the following:

1. Submit a final Application for Payment according to Division 01 Section "Payment Procedures."

2. Certified List of Incomplete Items: Submit certified copy of Architect's Substantial Completion inspection list of items to be completed or corrected (punch list). Certified copy of the list shall state that each item has been completed or otherwise resolved for acceptance.
3. Certificate of Insurance: Submit evidence of final, continuing insurance coverage complying with insurance requirements.
4. Submit pest-control final inspection report.

B. Inspection: Submit a written request for final inspection for acceptance. On receipt of request, Architect will either proceed with inspection or notify Contractor of unfulfilled requirements. Architect will prepare a final Certificate for Payment after inspection or will notify Contractor of construction that must be completed or corrected before certificate will be issued.

1. Reinspection: Request reinspection when the Work identified in previous inspections as incomplete is completed or corrected.

1.5 LIST OF INCOMPLETE ITEMS (PUNCH LIST)

A. Organization of List: Include name and identification of each space and area affected by construction operations for incomplete items and items needing correction including, if necessary, areas disturbed by Contractor that are outside the limits of construction

1. Organize list of spaces in sequential order, starting with exterior areas first and proceeding from lowest floor to highest floor.
2. Organize items applying to each space by major element, including categories for ceiling, individual walls, floors, equipment, and building systems.
3. Include the following information at the top of each page:

    a. Project name.
    b. Date.
    c. Name of Architect.
    d. Name of Contractor.
    e. Page number.

4. Submit list of incomplete items in the format agreed upon by the Owner and Architect.

1.6 SUBMITTAL OF PROJECT WARRANTIES

A. Time of Submittal: Submit written warranties for designated portions of the Work where commencement of warranties other than date of Substantial Completion is indicated, or when delay in submittal of warranties might limit Owner's rights under warranty.

B. Partial Occupancy: Submit properly executed warranties within minimum number days, as required by the Contract, of completion of designated portions of the Work that are completed and occupied or used by Owner during construction period by separate agreement with Contractor.

C. Organize warranty documents into an orderly sequence based on the table of contents of Project Manual.

1. Warranty Electronic File: Scan warranties and bonds and assemble complete warranty and bond submittal package into a single indexed electronic PDF file with links enabling navigation to each item. Provide bookmarked table of contents at beginning of document.

D. Provide additional copies of each warranty to include in operation and maintenance manuals.

PART 2 - PRODUCTS

2.1 MATERIALS

A. Cleaning Agents: Use cleaning materials and agents recommended by manufacturer or fabricator of the surface to be cleaned. Do not use cleaning agents that are potentially hazardous to health or property or that might damage finished surfaces.

1. Use cleaning products that comply with Green Seal's GS-37, or if GS-37 is not applicable, use products that comply with the California Code of Regulations maximum allowable VOC levels.

PART 3 - EXECUTION

3.1 FINAL CLEANING

A. General: Perform final cleaning. Conduct cleaning and waste-removal operations to comply with local laws and ordinances and Federal and local environmental and antipollution regulations.

B. Cleaning: Employ experienced workers or professional cleaners for final cleaning. Clean each surface or unit to condition expected in an average commercial building cleaning and maintenance program. Comply with manufacturer's written instructions.

1. Complete the following cleaning operations, as applicable, before requesting inspection for certification of Substantial Completion for entire Project or for a portion of Project:

a. Clean Project site, yard, and grounds, in areas disturbed by construction activities, including landscape development areas, of rubbish, waste material, litter, and other foreign substances.
b. Sweep paved areas broom clean. Remove petrochemical spills, stains, and other foreign deposits.
c. Rake grounds that are neither planted nor paved to a smooth, even-textured surface.
d. Remove tools, construction equipment, machinery, and surplus material from Project site.
e. Remove snow and ice to provide safe access to building.
f. Clean exposed exterior and interior hard-surfaced finishes to a dirt-free condition, free of stains, films, and similar foreign substances. Avoid disturbing natural weathering of exterior surfaces. Restore reflective surfaces to their original condition.
g. Remove debris and surface dust from limited access spaces, including roofs, plenums, shafts, trenches, equipment vaults, manholes, attics, and similar spaces.
h. Sweep concrete floors broom clean in unoccupied spaces.
i. Vacuum carpet and similar soft surfaces, removing debris and excess nap; clean according to manufacturer's recommendations if visible soil or stains remain.
j. Clean transparent materials, including mirrors and glass in doors and windows. Remove glazing compounds and other noticeable, vision-obscuring materials. Polish mirrors and glass, taking care not to scratch surfaces.
k. Remove labels that are not permanent.

l. Remove all graffiti and construction writing.
m. Wipe surfaces of mechanical and electrical equipment and similar equipment. Remove excess lubrication, paint and mortar droppings, and other foreign substances.
n. Clean plumbing fixtures to a sanitary condition, free of stains, including stains resulting from water exposure.
o. Replace disposable air filters and clean permanent air filters. Clean exposed surfaces of diffusers, registers, and grills.
p. Clean ducts, blowers, and coils if units were operated without filters during construction or that display contamination with particulate matter on inspection.
q. Clean light fixtures, lamps, globes, and reflectors to function with full efficiency.
r. Leave Project clean and ready for occupancy.

C. Pest Control: Comply with pest control requirements in Division 01 Section "Temporary Facilities and Controls." Prepare written report.

D. Construction Waste Disposal: Comply with waste disposal requirements in Division 01 Section "Temporary Facilities and Controls." and Division 01 Section "Construction Waste Management and Disposal", whichever is the more restrictive and as follows:

1. Comply with safety standards for cleaning. Do not burn waste materials. Do not bury debris or excess materials on Owner's property. Do not discharge volatile, harmful, or dangerous materials into drainage systems. Remove waste materials from Project site and dispose of lawfully.

3.2 REPAIR OF THE WORK

A. Complete repair and restoration operations before requesting inspection for determination of Substantial Completion.

B. Repair or remove and replace defective construction. Repairing includes replacing defective parts, refinishing damaged surfaces, touching up with matching materials, and properly adjusting operating equipment. Where damaged or worn items cannot be repaired or restored, provide replacements. Remove and replace operating components that cannot be repaired. Restore damaged construction and permanent facilities used during construction to specified condition.

1. Remove and replace chipped, scratched, and broken glass, reflective surfaces, and other damaged transparent materials.
2. Touch up and otherwise repair and restore marred or exposed finishes and surfaces. Replace finishes and surfaces that that already show evidence of repair or restoration.

a. Do not paint over "UL" and other required labels and identification, including mechanical and electrical nameplates. Remove paint applied to required labels and identification.

3. Replace parts subject to operating conditions during construction that may impede operation or reduce longevity.
4. Replace all lamps and starters to comply with requirements for new fixtures.

C. All Warranties remain in effect.

END OF SECTION

SECTION 01 7823

OPERATION AND MAINTENANCE DATA

PART 1 - GENERAL

1.1 SUMMARY

A. Section includes administrative and procedural requirements for preparing operation and maintenance manuals, including the following:

1. Operation and maintenance documentation directory.
2. Emergency manuals.
3. Operation manuals for systems, subsystems, and equipment.
4. Product maintenance manuals.
5. Systems and equipment maintenance manuals.

1.2 DEFINITIONS

A. System: An organized collection of parts, equipment, or subsystems united by regular interaction.

B. Subsystem: A portion of a system with characteristics similar to a system.

1.3 CLOSEOUT SUBMITTALS

A. Manual Content: Operations and maintenance manual content is specified in individual Specification Sections to be reviewed at the time of Section submittals. Submit reviewed manual content formatted and organized as required by this Section.

B. Format: Submit operations and maintenance manuals in the following format:

1. PDF electronic file. Assemble each manual into a composite electronically indexed file. Submit on digital media acceptable to Owner.

a. Name each indexed document file in composite electronic index with applicable item name. Include a complete electronically linked operation and maintenance directory.
b. Enable inserted reviewer comments on draft submittals.

C. Initial Manual Submittal: Submit draft copy of each manual at least 30 days before commencing demonstration and training. Architect will comment on whether general scope and content of manual are acceptable.

D. Final Manual Submittal: Submit each manual in final form prior to requesting inspection for Substantial Completion and before commencing demonstration and training. Architect will return copy with comments.

1. Correct or revise each manual to comply with Architect's comments. Submit copies of each corrected manual prior to commencing demonstration and training.

PART 2 - PRODUCTS

2.1 OPERATION AND MAINTENANCE DOCUMENTATION DIRECTORY

A. Directory: Prepare a single, comprehensive directory of emergency, operation, and maintenance data and materials, listing items and their location to facilitate ready access to desired information. Include a section in the directory for each of the following:

1. List of documents.
2. List of systems.
3. List of equipment.
4. Table of contents.

B. List of Systems and Subsystems: List systems alphabetically. Include references to operation and maintenance manuals that contain information about each system.

C. List of Equipment: List equipment for each system, organized alphabetically by system. For pieces of equipment not part of system, list alphabetically in separate list.

D. Tables of Contents: Include a table of contents for each emergency, operation, and maintenance manual.

E. Identification: In the documentation directory and in each operation and maintenance manual, identify each system, subsystem, and piece of equipment with same designation used in the Contract Documents. If no designation exists, assign a designation according to ASHRAE Guideline 4, "Preparation of Operating and Maintenance Documentation for Building Systems."

2.2 REQUIREMENTS FOR EMERGENCY, OPERATION, AND MAINTENANCE MANUALS

A. Organization: Unless otherwise indicated, organize each manual into a separate section for each system and subsystem, and a separate section for each piece of equipment not part of a system. Each manual shall contain the following materials, in the order listed:

1. Title page.
2. Table of contents.
3. Manual contents.

B. Title Page: Include the following information:

1. Subject matter included in manual.
2. Name and address of Project.
3. Name and address of Owner.
4. Date of submittal.
5. Name and contact information for Contractor.
6. Name and contact information for Architect.
7. Names and contact information for major consultants to the Architect that designed the systems contained in the manuals.
8. Cross-reference to related systems in other operation and maintenance manuals.

C. Table of Contents: List each product included in manual, identified by product name, indexed to the content of the volume, and cross-referenced to Specification Section number in Project Manual.

1. If operation or maintenance documentation requires more than one volume to accommodate data, include comprehensive table of contents for all volumes in each volume of the set.

D. Manual Contents: Organize into sets of manageable size. Arrange contents alphabetically by system, subsystem, and equipment. If possible, assemble instructions for subsystems, equipment, and components of one system into a single binder.

E. Manuals, Electronic Files: Submit manuals in the form of a multiple file composite electronic PDF file for each manual type required.

1. Electronic Files: Use electronic files prepared by manufacturer where available. Where scanning of paper documents is required, configure scanned file for minimum readable file size.
2. File Names and Bookmarks: Enable bookmarking of individual documents based on file names. Name document files to correspond to system, subsystem, and equipment names used in manual directory and table of contents. Group documents for each system and subsystem into individual composite bookmarked files, then create composite manual, so that resulting bookmarks reflect the system, subsystem, and equipment names in a readily navigated file tree. Configure electronic manual to display bookmark panel on opening file.

2.3 EMERGENCY MANUALS

A. Content: Organize manual into a separate section for each of the following:

1. Type of emergency.
2. Emergency instructions.
3. Emergency procedures.

B. Type of Emergency: Where applicable for each type of emergency indicated below, include instructions and procedures for each system, subsystem, piece of equipment, and component:

1. Fire.
2. Flood.
3. Gas leak.
4. Water leak.
5. Power failure.
6. Water outage.
7. System, subsystem, or equipment failure.
8. Chemical release or spill.

C. Emergency Instructions: Describe and explain warnings, trouble indications, error messages, and similar codes and signals. Include responsibilities of Owner's operating personnel for notification of Installer, supplier, and manufacturer to maintain warranties.

D. Emergency Procedures: Include the following, as applicable:

1. Instructions on stopping.
2. Shutdown instructions for each type of emergency.
3. Operating instructions for conditions outside normal operating limits.
4. Required sequences for electric or electronic systems.
5. Special operating instructions and procedures.

2.4 OPERATION MANUALS

A. Content: In addition to requirements in this Section, include operation data required in individual Specification Sections and the following information:

1. System, subsystem, and equipment descriptions. Use designations for systems and equipment indicated on Contract Documents.
2. Performance and design criteria if Contractor has delegated design responsibility.
3. Operating standards.
4. Operating procedures.
5. Operating logs.
6. Wiring diagrams.
7. Control diagrams.
8. Piped system diagrams.
9. Precautions against improper use.
10. License requirements including inspection and renewal dates.

B. Descriptions: Include the following:

1. Product name and model number. Use designations for products indicated on Contract Documents.
2. Manufacturer's name.
3. Equipment identification with serial number of each component.
4. Equipment function.
5. Operating characteristics.
6. Limiting conditions.
7. Performance curves.
8. Engineering data and tests.
9. Complete nomenclature and number of replacement parts.

C. Operating Procedures: Include the following, as applicable:

1. Startup procedures.
2. Equipment or system break-in procedures.
3. Routine and normal operating instructions.
4. Regulation and control procedures.
5. Instructions on stopping.
6. Normal shutdown instructions.
7. Seasonal and weekend operating instructions.
8. Required sequences for electric or electronic systems.
9. Special operating instructions and procedures.

D. Systems and Equipment Controls: Describe the sequence of operation, and diagram controls as installed.

E. Piped Systems: Diagram piping as installed, and identify color-coding where required for identification.

2.5 PRODUCT MAINTENANCE MANUALS

A. Content: Organize manual into a separate section for each product, material, and finish. Include source information, product information, maintenance procedures, repair materials and sources, and warranties and bonds, as described below.

B. Source Information: List each product included in manual, identified by product name and arranged to match manual's table of contents. For each product, list name, address, and telephone number of Installer or supplier and maintenance service agent, and cross-reference Specification Section number and title in Project Manual and drawing or schedule designation or identifier where applicable.

C. Product Information: Include the following, as applicable:

1. Product name and model number.
2. Manufacturer's name.
3. Color, pattern, and texture.
4. Material and chemical composition.
5. Reordering information for specially manufactured products.

D. Maintenance Procedures: Include manufacturer's written recommendations and the following:

1. Inspection procedures.
2. Types of cleaning agents to be used and methods of cleaning.
3. List of cleaning agents and methods of cleaning detrimental to product.
4. Schedule for routine cleaning and maintenance.
5. Repair instructions.

E. Repair Materials and Sources: Include lists of materials and local sources of materials and related services.

F. Warranties and Bonds: Include copies of warranties and bonds and lists of circumstances and conditions that would affect validity of warranties or bonds.

1. Include procedures to follow and required notifications for warranty claims.

2.6 SYSTEMS AND EQUIPMENT MAINTENANCE MANUALS

A. Content: For each system, subsystem, and piece of equipment not part of a system, include source information, manufacturers' maintenance documentation, maintenance procedures, maintenance and service schedules, spare parts list and source information, maintenance service contracts, and warranty and bond information, as described below.

B. Source Information: List each system, subsystem, and piece of equipment included in manual, identified by product name and arranged to match manual's table of contents. For each product, list name, address, and telephone number of Installer or supplier and maintenance service agent, and cross-reference Specification Section number and title in Project Manual and drawing or schedule designation or identifier where applicable.

C. Manufacturers' Maintenance Documentation: Manufacturers' maintenance documentation including the following information for each component part or piece of equipment:

1. Standard maintenance instructions and bulletins.
2. Drawings, diagrams, and instructions required for maintenance, including disassembly and component removal, replacement, and assembly.
3. Identification and nomenclature of parts and components.
4. List of items recommended to be stocked as spare parts.

D. Maintenance Procedures: Include the following information and items that detail essential maintenance procedures:

1. Test and inspection instructions.
2. Troubleshooting guide.
3. Precautions against improper maintenance.
4. Disassembly; component removal, repair, and replacement; and reassembly instructions.
5. Aligning, adjusting, and checking instructions.
6. Demonstration and training video recording, if available.

E. Maintenance and Service Schedules: Include service and lubrication requirements, list of required lubricants for equipment, and separate schedules for preventive and routine maintenance and service with standard time allotment.

1. Scheduled Maintenance and Service: Tabulate actions for daily, weekly, monthly, quarterly, semiannual, and annual frequencies.
2. Maintenance and Service Record: Include manufacturers' forms for recording maintenance.

F. Spare Parts List and Source Information: Include lists of replacement and repair parts, with parts identified and cross-referenced to manufacturers' maintenance documentation and local sources of maintenance materials and related services.

G. Maintenance Service Contracts: Include copies of maintenance agreements with name and telephone number of service agent.

H. Warranties and Bonds: Include copies of warranties and bonds and lists of circumstances and conditions that would affect validity of warranties or bonds.

1. Include procedures to follow and required notifications for warranty claims.

PART 3 - EXECUTION

3.1 MANUAL PREPARATION

A. Emergency Manual: Assemble a complete set of emergency information indicating procedures for use by emergency personnel and by Owner's operating personnel for types of emergencies indicated.

B. Product Maintenance Manual: Assemble a complete set of maintenance data indicating care and maintenance of each product, material, and finish incorporated into the Work.

C. Operation and Maintenance Manuals: Assemble a complete set of operation and maintenance data indicating operation and maintenance of each system, subsystem, and piece of equipment not part of a system.

1. Engage a factory-authorized service representative to assemble and prepare information for each system, subsystem, and piece of equipment not part of a system.
2. Prepare a separate manual for each system and subsystem, in the form of an instructional manual for use by Owner's operating personnel.

D. Manufacturers' Data: Where manuals contain manufacturers' standard printed data, include only sheets pertinent to product or component installed. Mark each sheet to identify each product or component incorporated into the Work. If data include more than one item in a tabular format, identify each item using appropriate references from the Contract Documents. Identify data applicable to the Work and delete references to information not applicable.

1. Prepare supplementary text if manufacturers' standard printed data are not available and where the information is necessary for proper operation and maintenance of equipment or systems.

E. Drawings: Prepare drawings supplementing manufacturers' printed data to illustrate the relationship of component parts of equipment and systems and to illustrate control sequence and flow diagrams. Coordinate these drawings with information contained in record Drawings to ensure correct illustration of completed installation.

1. Do not use original project record documents as part of operation and maintenance manuals.
2. Comply with requirements of newly prepared record Drawings in Division 01 Section "Project Record Documents."

F. Comply with Division 01 Section "Closeout Procedures" for schedule for submitting operation and maintenance documentation.

END OF SECTION

SECTION 01 7839

PROJECT RECORD DOCUMENTS

PART 1 - GENERAL

1.1 SUMMARY

A. Section includes administrative and procedural requirements for project record documents, including the following:

1. Record Drawings.
2. Record Specifications.
3. Record Product Data.
4. Miscellaneous record submittals.

1.2 SUBMITTALS

A. Record Drawings: Comply with the following:

1. Number of Copies: Submit copies of record Drawings as follows:

a. Initial Submittal:

1) Submit PDF electronic files of scanned record.
2) Architect will indicate whether general scope of changes, additional information recorded, and quality of drafting are acceptable.

b. Final Submittal:

1) Submit PDF electronic files of scanned record.

B. Record Specifications: Submit annotated PDF electronic files of Project's Specifications, including addenda and contract modifications.

C. Record Product Data: Submit annotated PDF electronic files and directories of each submittal.

D. Miscellaneous Record Submittals: See other Specification Sections for miscellaneous record-keeping requirements and submittals in connection with various construction activities. Submit annotated PDF electronic files and directories of each submittal.

PART 2 - PRODUCTS

2.1 ELECTRONIC PROJECT MANAGEMENT SOFTWARE

A. Electronic File of Project Record Documents: Provide Architect with an independent electronic archive of accepted project record documents using electronic project management software as defined in Division 01 Section "Project Management and Coordination", in addition to the printed documents described elsewhere in this Section.

2.2 RECORD DRAWINGS

A. Record Prints: Maintain one set of marked-up paper copies of the Contract Drawings and Shop Drawings, incorporating new and revised drawings as modifications are issued.

1. Preparation: Mark record prints to show the actual installation where installation varies from that shown originally. Require individual or entity who obtained record data, whether individual or entity is Installer, subcontractor, or similar entity, to provide information for preparation of corresponding marked-up record prints.

    a. Give particular attention to information on concealed elements that would be difficult to identify or measure and record later.
    b. Accurately record information in an acceptable drawing technique.
    c. Record data as soon as possible after obtaining it.
    d. Record and check the markup before enclosing concealed installations.
    e. Cross-reference record prints to corresponding archive photographic documentation.

2. Content: Types of items requiring marking include, but are not limited to, the following:

    a. Dimensional changes to Drawings.
    b. Revisions to details shown on Drawings.
    c. Depths of foundations below first floor.
    d. Locations and depths of underground utilities.
    e. Revisions to routing of piping and conduits.
    f. Revisions to electrical circuitry.
    g. Actual equipment locations.
    h. Duct size and routing.
    i. Locations of concealed internal utilities.
    j. Changes made by Change Order or Construction Change Directive.
    k. Changes made following Architect's written orders.
    l. Details not on the original Contract Drawings.
    m. Field records for variable and concealed conditions.
    n. Record information on the Work that is shown only schematically.

3. Mark the Contract Drawings and Shop Drawings completely and accurately. Use personnel proficient at recording graphic information in production of marked-up record prints.
4. Mark record sets with erasable, red-colored pencil. Use other colors to distinguish between changes for different categories of the Work at same location.
5. Mark important additional information that was either shown schematically or omitted from original Drawings.
6. Note Construction Change Directive numbers, alternate numbers, Change Order numbers, and similar identification, where applicable.

2.3 RECORD SPECIFICATIONS

A. Preparation: Mark Specifications to indicate the actual product installation where installation varies from that indicated in Specifications, addenda, and contract modifications.

1. Give particular attention to information on concealed products and installations that cannot be readily identified and recorded later.
2. Mark copy with the proprietary name and model number of products, materials, and equipment furnished, including substitutions and product options selected.

3. Record the name of manufacturer, supplier, Installer, and other information necessary to provide a record of selections made.
4. Note related Change Orders, record Product Data, and record Drawings where applicable.

B. Format: Submit record Specifications as scanned PDF electronic file(s) of marked-up paper copy of Specifications.

2.4 RECORD PRODUCT DATA

A. Preparation: Mark Product Data to indicate the actual product installation where installation varies substantially from that indicated in Product Data submittal.

1. Give particular attention to information on concealed products and installations that cannot be readily identified and recorded later.
2. Include significant changes in the product delivered to Project site and changes in manufacturer's written instructions for installation.
3. Note related Change Orders, record Specifications, and record Drawings where applicable.

B. Format: Submit record Product Data as scanned PDF electronic file(s) of marked-up paper copy of Product Data.

1. Include record Product Data directory organized by Specification Section number and title, electronically linked to each item of record Product Data.

2.5 MISCELLANEOUS RECORD SUBMITTALS

A. Assemble miscellaneous records required by other Specification Sections for miscellaneous record keeping and submittal in connection with actual performance of the Work. Bind or file miscellaneous records and identify each, ready for continued use and reference.

B. Format: Submit miscellaneous record submittals as scanned PDF electronic file(s) of marked-up miscellaneous record submittals.

1. Include miscellaneous record submittals directory organized by Specification Section number and title, electronically linked to each item of miscellaneous record submittals.

PART 3 - EXECUTION

3.1 RECORDING AND MAINTENANCE

A. Recording: Maintain one copy of each submittal during the construction period for project record document purposes. Post changes and revisions to project record documents as they occur; do not wait until end of Project.

B. Maintenance of Record Documents and Samples: Store record documents and Samples in the field office apart from the Contract Documents used for construction. Do not use project record documents for construction purposes. Maintain record documents in good order and in a clean, dry, legible condition, protected from deterioration and loss. Provide access to project record documents for Architect's reference during normal working hours.

END OF SECTION

SECTION 01 7900

DEMONSTRATION AND TRAINING

PART 1 - GENERAL

1.1 SUMMARY

A. Section includes administrative and procedural requirements for instructing Owner's personnel, including the following:

1. Demonstration of operation of systems, subsystems, and equipment.
2. Training in operation and maintenance of systems, subsystems, and equipment.

1.2 SUBMITTALS

A. Instruction Program: Submit outline of instructional program for demonstration and training, including a list of training modules and a schedule of proposed dates, times, length of instruction time, and instructors' names for each training module. Include learning objective and outline for each training module.

1. Indicate proposed training modules using manufacturer-produced demonstration and training video recordings for systems, equipment, and products.

B. Qualification Data: For instructor.

C. Attendance Record: For each training module, submit list of participants and length of instruction time.

D. Evaluations: For each participant and for each training module, submit results and documentation of performance-based test.

1.3 QUALITY ASSURANCE

A. Instructor Qualifications: A factory-authorized service representative, complying with requirements in Division 01 Section "Quality Requirements," experienced in operation and maintenance procedures and training.

B. Preinstruction Conference: Conduct conference at Project site to comply with requirements in Division 01 Section "Project Management and Coordination." Review methods and procedures related to demonstration and training including, but not limited to, the following:

1. Inspect and discuss locations and other facilities required for instruction.
2. Review and finalize instruction schedule and verify availability of educational materials, instructors' personnel, audiovisual equipment, and facilities needed to avoid delays.
3. Review required content of instruction.
4. For instruction that must occur outside, review weather and forecasted weather conditions and procedures to follow if conditions are unfavorable.

1.4 COORDINATION

A. Coordinate instruction schedule with Owner's operations. Adjust schedule as required to minimize disrupting Owner's operations and to ensure availability of Owner's personnel.

B. Coordinate instructors, including providing notification of dates, times, length of instruction time, and course content.

C. Coordinate content of training modules with content of approved emergency, operation, and maintenance manuals.

PART 2 - PRODUCTS

2.1 INSTRUCTION PROGRAM

A. Program Structure: Develop an instruction program that includes individual training modules for each system and for equipment not part of a system, as required by individual Specification Sections.

B. Training Modules: Develop a learning objective and teaching outline for each module. Include a description of specific skills and knowledge that participant is expected to master. For each module, include instruction for the following as applicable to the system, equipment, or component:

1. Basis of System Design, Operational Requirements, and Criteria: Include the following:

    a. System, subsystem, and equipment descriptions.
    b. Performance and design criteria if Contractor is delegated design responsibility.
    c. Operating standards.
    d. Regulatory requirements.
    e. Equipment function.
    f. Operating characteristics.
    g. Limiting conditions.
    h. Performance curves.

2. Documentation: Review the following items in detail:

    a. Emergency manuals.
    b. Operations manuals.
    c. Maintenance manuals.
    d. Project record documents.
    e. Identification systems.
    f. Warranties and bonds.
    g. Maintenance service agreements and similar continuing commitments.

3. Emergencies: Include the following, as applicable:

    a. Instructions on meaning of warnings, trouble indications, and error messages.
    b. Instructions on stopping.
    c. Shutdown instructions for each type of emergency.
    d. Operating instructions for conditions outside of normal operating limits.
    e. Sequences for electric or electronic systems.
    f. Special operating instructions and procedures.

4. Operations: Include the following, as applicable:

    a. Startup procedures.
    b. Equipment or system break-in procedures.
    c. Routine and normal operating instructions.
    d. Regulation and control procedures.
    e. Control sequences.
    f. Safety procedures.
    g. Instructions on stopping.
    h. Normal shutdown instructions.
    i. Operating procedures for emergencies.
    j. Operating procedures for system, subsystem, or equipment failure.
    k. Seasonal and weekend operating instructions.
    l. Required sequences for electric or electronic systems.
    m. Special operating instructions and procedures.

5. Adjustments: Include the following:

    a. Alignments.
    b. Checking adjustments.
    c. Noise and vibration adjustments.
    d. Economy and efficiency adjustments.

6. Troubleshooting: Include the following:

    a. Diagnostic instructions.
    b. Test and inspection procedures.

7. Maintenance: Include the following:

    a. Inspection procedures.
    b. Types of cleaning agents to be used and methods of cleaning.
    c. List of cleaning agents and methods of cleaning detrimental to product.
    d. Procedures for routine cleaning
    e. Procedures for preventive maintenance.
    f. Procedures for routine maintenance.
    g. Instruction on use of special tools.

8. Repairs: Include the following:

    a. Diagnosis instructions.
    b. Repair instructions.
    c. Disassembly; component removal, repair, and replacement; and reassembly instructions.
    d. Instructions for identifying parts and components.
    e. Review of spare parts needed for operation and maintenance.

PART 3 - EXECUTION

3.1 PREPARATION

A. Assemble educational materials necessary for instruction, including documentation and training module. Assemble training modules into a training manual organized in coordination with requirements in Division 01 Section "Operations and Maintenance Data."

B. Set up instructional equipment at instruction location.

3.2 INSTRUCTION

A. Engage qualified instructors to instruct Owner's personnel to adjust, operate, and maintain systems, subsystems, and equipment not part of a system.

1. Owner will furnish Contractor with names and positions of participants.

B. Scheduling: Provide instruction at mutually agreed on times. For equipment that requires seasonal operation, provide similar instruction at start of each season.

1. Schedule training with Owner with at least seven days' advance notice.

C. Training Location and Reference Material: Conduct training on-site in the completed and fully operational facility using the actual equipment in-place. Conduct training using final operation and maintenance data submittals.

D. Evaluation: At conclusion of each training module, assess and document each participant's mastery of module by use of a demonstration performance-based test.

E. Cleanup: Collect used and leftover educational materials and remove from Project site. Remove instructional equipment. Restore systems and equipment to condition existing before initial training use.

END OF SECTION

SECTION 01 9113

GENERAL COMMISSIONING REQUIREMENTS

PART 1 - GENERAL

1.1 RELATED DOCUMENTS

A. OPR and BoD documentation are included by reference for information only.

1.2 SUMMARY

A. Section includes general requirements that apply to implementation of commissioning without regard to specific systems, assemblies, or components.

B. Related Documents:

1. OPR and BoD documentation are included by reference for information only.

1.3 DEFINITIONS

A. BoD: Basis of Design. A document that records concepts, calculations, decisions, and product selections used to meet the OPR and to satisfy applicable regulatory requirements, standards, and guidelines. The document includes both narrative descriptions and lists of individual items that support the design process.

B. Commissioning Plan: A document that outlines the organization, schedule, allocation of resources, and documentation requirements of the commissioning process.

C. CxA: Commissioning Authority.

D. OPR: Owner's Project Requirements. A document that details the functional requirements of a project and the expectations of how it will be used and operated. These include Project goals, measurable performance criteria, cost considerations, benchmarks, success criteria, and supporting information.

E. Systems, Subsystems, Equipment, and Components: Where these terms are used together or separately, they shall mean "as-built" systems, subsystems, equipment, and components.

1.4 COMMISSIONING TEAM

A. Members Appointed by Contractor(s): Individuals, each having the authority to act on behalf of the entity he or she represents, explicitly organized to implement the commissioning process through coordinated action. The commissioning team shall consist of, but not be limited to, representatives of Contractor, including Project superintendent and subcontractors, installers, suppliers, and specialists deemed appropriate by the CxA.

B. Members Appointed by Owner:

1. CxA: The designated person, company, or entity that plans, schedules, and coordinates the commissioning team to implement the commissioning process. Owner will engage the CxA under a separate contract.
2. Representatives of the facility user and operation and maintenance personnel.
3. Architect and engineering design professionals.

1.5 OWNER'S RESPONSIBILITIES

A. Provide the OPR documentation to the CxA and Contractor for information and use.

B. Assign operation and maintenance personnel and schedule them to participate in commissioning team activities.

C. Provide the BoD documentation, prepared by Architect and approved by Owner, to the CxA and Contractor for use in developing the commissioning plan, systems manual, and operation and maintenance training plan.

1.6 CONTRACTOR'S RESPONSIBILITIES

A. Contractor shall assign representatives with expertise and authority to act on its behalf and shall schedule them to participate in and perform commissioning process activities including, but not limited to, the following:

1. Evaluate performance deficiencies identified in test reports and, in collaboration with entity responsible for system and equipment installation, recommend corrective action.
2. Cooperate with the CxA for resolution of issues recorded in the Issues Log.
3. Integrate and coordinate commissioning process activities with construction schedule.
4. Review and accept construction checklists provided by the CxA.
5. Review and accept commissioning process test procedures provided by the Commissioning Authority.
6. Complete commissioning process test procedures.

1.7 CxA'S RESPONSIBILITIES

A. Organize and lead the commissioning team.

B. Provide commissioning plan.

C. Convene commissioning team meetings.

D. Provide Project-specific construction checklists and commissioning process test procedures.

E. Verify the execution of commissioning process activities using random sampling. The sampling rate may vary from 1 to 100 percent. Verification will include, but is not limited to, equipment submittals, construction checklists, training, operating and maintenance data, tests, and test reports to verify compliance with the OPR. When a random sample does not meet the requirement, the CxA will report the failure in the Issues Log.

F. Prepare and maintain the Issues Log.

G. Prepare and maintain completed construction checklist log.

H. Witness systems, assemblies, equipment, and component startup.

I. Compile test data, inspection reports, and certificates; include them in the systems manual and commissioning process report.

PART 2 - PRODUCTS (Not Used)

PART 3 - EXECUTION (Not Used)

END OF SECTION

SECTION 02 4113

SELECTIVE SITE DEMOLITION

PART 1 - GENERAL

1.01 RELATED DOCUMENTS

A. Drawings and general provisions of the Contract, including General and Supplementary Conditions and Division 01 Specification Sections, apply to this Section.

1.02 SUMMARY

A. The work under this section of the Specifications includes all labor, materials, equipment, and services necessary for SELECTIVE SITE DEMOLITION as shown on the Drawings and herein specified and in accordance with the Contract Documents. All costs for labor, materials, equipment, and services necessary for SELECTIVE SITE DEMOLITION shall be included in the bid prices for the work

1.03 SECTION INCLUDES

A. Demolition and removal of buildings and site improvements.
B. Disconnecting, capping or sealing, and abandoning in-place and removing site utilities.
C. Salvaging items for reuse by Owner.

1.04 RELATED SECTIONS

A. 31 1000 Site Clearing
B. 31 2300 Excavation and Fill
C. 31 2500 Erosion and Sedimentation Controls

1.05 DEFINITIONS

A. Remove - Detach items from existing construction and legally dispose of them off-site unless indicated to be removed and salvaged or removed and reinstalled.
B. Remove and Salvage - Carefully detach from existing construction, in a manner to prevent damage, and deliver to OWNER.

1.06 INFORMATIONAL SUBMITTALS

A. Photograph, video, or both the existing trees and plantings, adjoining construction, roadways, utilities, and site improvements to establish preconstruction conditions. Identify preexisting damage to trees, plantings, adjoining construction, pavements, sidewalks, and other site improvements. Include plans and notations to identify and describe any such conditions.
B. Schedule of Building Demolition Activities; Indicate the following:
    1. Temporary interruption of utility services.
    2. Shutoff and capping or re-routing of utility services.

1.07 QUALITY ASSURANCE

A. PRECONSTRUCTION CONFERENCE

    1. Conduct a preconstruction conference. Subcontractors that will be performing the work shall attend the preconstruction conference. Notify ENGINEER one week (7 days) prior to the date of the meeting.
    2. Inspect and discuss condition of construction to be demolished.

3. Review structural load limitations of existing structures.
4. Review and finalize building demolition schedule and verify availability of demolition personnel, equipment, and facilities needed to make progress and avoid delays.
5. Review and finalize protection requirements.
6. Review procedures for dust control.
7. Review procedures for protection of adjacent buildings.
8. Review items to be salvaged and returned to Owner.

1.08 REGULATORY REQUIREMENTS

A. All materials and methods shall comply with the requirements of the AHJ.

1.09 PERMITS

A. CONTRACTOR shall make application, pay permit fees, and obtain any and all demolition permits.

1.10 MATERIALS OWNERSHIP

A. Unless otherwise indicated, demolition waste becomes property of CONTRACTOR.

1.11 TOPOGRAPHIC SURVEY

A. OWNER has or will perform a survey of the site, stake the property limits, and provide a reference benchmark elevation. CONTRACTOR shall be responsible for any additional offset staking or layout survey required to locate improvements and control grade of improvements. Be responsible for the proper location and level of the work and for the maintenance of reference lines and benchmarks. Any re-staking requested by the CONTRACTOR shall be done at his expense.

1.12 UNDERGROUND UTILITIES

A. CONTRACTOR shall contact OKIE (811 or 1-800-522-OKIE) prior to construction for locating existing utilities.

B. The underground utilities shown on the Drawings have been located from field survey surface information and existing drawings. ENGINEER and Surveyor make no guarantee that the underground utilities shown comprise all such utilities in the area, either in service or abandoned. The underground utilities are located as accurately as possible from information available; however, ENGINEER and Surveyor further do not guarantee that the underground utilities shown are in the exact location indicated either vertically or horizontally. ENGINEER and Surveyor have not physically located the underground utilities by probing, excavating, hydrovac, or by any other means.

C. CONTRACTOR shall notify all utility companies and governmental agencies who may have utility lines on or about the premises or who may be affected by the construction. Notice shall be given no less than twenty-four hours prior to any work that may interfere with a utility.

D. All existing structures, improvement and utilities designated to remain shall be adequately protected from damage that might otherwise occur due to construction operations. Where construction comes in close proximity to existing structures, utilities or appurtenances, or if it becomes necessary to move services, poles, guy wires, pipe lines or other obstructions, CONTRACTOR shall notify and cooperate with the owner of the utility, structure, or appurtenance. The utility lines and other existing structures shown on the plans are for information only and are not guaranteed to be complete or accurate

as to location and/or depth. CONTRACTOR shall be liable for damage to any utilities resulting from the CONTRACTOR's operations. During construction, all fire hydrants, valve boxes, fire or police call boxes and other existing utility controls shall be left intact, unobstructed and accessible unless noted on the plan.

E. Contractor shall satisfy themselves as to the actual existing subsurface conditions, including but not limited to the depth, location and sizes of pipe or conduits of various kinds in place prior to beginning work. Where the exact depth of any utility or obstruction is not shown on a plan, excavation shall be made prior to reaching the obstruction in order to determine adjustments in grade if needed to prevent interference. Redesign to eliminate conflicts may be necessary.

1.13 FIELD CONDITIONS

A. Notify ENGINEER of discrepancies between existing conditions and Drawings before proceeding with selective demolition.

B. Buildings to be demolished will be vacated and their use discontinued before start of the Work.

1. Buildings immediately adjacent to demolition area will be occupied. Conduct building demolition so operations of occupied buildings will not be disrupted.
2. Provide not less than 72 hours' notice of activities that will affect operations of adjacent occupied buildings.
3. Maintain access to existing walkways, exits, and other facilities used by occupants of adjacent buildings.
    a. Do not close or obstruct walkways, exits, or other facilities used by occupants of adjacent buildings without written permission from authorities having jurisdiction.

C. Conditions existing at time of inspection for bidding purpose will be maintained by Owner as far as practical.

1. Before building demolition, coordinate with the Owner of any items Owner will remove prior to demolition and any items Owner wants CONTRACTOR to salvage for Owner’s reuse.

D. On-site storage or sale of removed items or materials is not permitted.

1.14 COORDINATION

A. Arrange demolition schedule so as not to interfere with Owner's on-site operations or operations of adjacent occupied buildings.

1.15 HAZARDOUS CONDITIONS

A. If CONTRACTOR encounters a Hazardous Environmental Condition or if CONTRACTOR or anyone for whom CONTRACTOR is responsible creates a Hazardous Environmental Condition, CONTRACTOR shall immediately: (i) secure or otherwise isolate such condition; (ii) stop all Work in connection with such condition and in any area affected thereby (except in an emergency); and (iii) notify Owner and Engineer (and promptly thereafter confirm such notice in writing). Owner shall promptly consult with Engineer concerning the necessity for Owner to retain a qualified expert to evaluate such condition or take corrective action, if any.

PART 2 - PRODUCTS

2.01 PERFORMANCE REQUIREMENTS

A. Comply with governing CITY, STATE, and FEDERAL notification regulations before beginning selective demolition. Comply with hauling and disposal regulations of authorities having jurisdiction.

B. Standards: Comply with ANSI/ASSE A10.6 “Safety Requirements for Demolition Operations” from the American National Standard for Construction and Demolition Operations, and NFPA 241 “Standard for Safeguarding Construction, Alteration, and Demolition Operations”.

2.02 SOIL MATERIALS

A. Satisfactory Soils: Comply with requirements in Section 31 23 00 Excavation and Fill.

PART 3 - EXECUTION

3.01 PRE-DEMOLITION WORK

A. Contact OKIE (811 or 1-800-522-OKIE) prior to construction for locating existing utilities.

B. Notify all utility companies and governmental agencies who may have utility lines on or about the premises or who may be affected by the construction. Notice shall be given no less than twenty-four hours prior to any work that may interfere with a utility. CONTRACTOR shall also coordinate the construction activities with the utility companies to ensure compliance with the project schedule.

C. All existing structures, improvement and utilities designated to remain shall be adequately protected from damage that might otherwise occur due to construction operations. Where construction comes in close proximity to existing structures, utilities or appurtenances, or if it becomes necessary to move services, poles, guy wires, pipe lines or other obstructions, CONTRACTOR shall notify and cooperate with the OWNER of the utility, structure, or appurtenance. The utility lines and other existing structures shown on the plans are for information only and are not guaranteed to be complete or accurate as to location and/or depth. CONTRACTOR shall be liable for damage to any utilities resulting from the CONTRACTOR's operations. During construction, all fire hydrants, valve boxes, fire or police call boxes and other existing utility controls shall be left intact, unobstructed and accessible unless noted on the plan.

D. CONTRACTOR shall satisfy themselves as to the actual existing subsurface conditions, including but not limited to the depth, location and sizes of pipe or conduits of various kinds in place prior to demolition. Where the exact depth of any utility or obstruction is not shown on a plan, excavation shall be made prior to reaching the obstruction in order to determine adjustments in grade if needed to prevent interference. Redesign to eliminate conflicts may be necessary.

E. Verify that utilities have been disconnected and capped before starting selective demolition operations.

F. Photograph, record on video, or both the existing conditions of the Project site and adjoining property.

3.02 CONSTRUCTION CONTROL

A. CONTRACTOR shall be responsible for properly laying out the work, and for lines and measurements for the work executed under the Contract Documents. Verify the figures shown on the Drawings before ordering any materials and laying out the work, and report errors or inaccuracies in writing to the ENGINEER before commencing work. The

ENGINEER or his representative will in no case assume the responsibility for laying out the work.

B. Existing survey points other than those shown on the Drawings shall not be considered as acceptable control points unless approved by the ENGINEER. If approval is secured, CONTRACTOR remains responsible for maintaining them and for their accuracy. Be responsible for preserving all existing iron or metal, and all concrete survey points or monuments for the construction period.

3.03 EXAMINATION

A. Verify that utilities have been disconnected and capped before starting demolition operations.

B. Review Project Record Documents of existing construction or other existing condition and hazardous material information provided by Owner. Owner does not guarantee that existing conditions are same as those indicated in Project Record Documents.

C. Perform an engineering survey of condition of building to determine whether removing any element might result in structural deficiency or unplanned collapse of any portion of structure or adjacent structures during building demolition operations.

D. Steel Tendons: Locate tensioned steel tendons and include recommendations for de-tensioning.

E. Verify that hazardous materials have been remediated before proceeding with building demolition operations.

F. Inventory and record the condition of items to be removed and salvaged. Provide photographs or video of conditions that might be misconstrued as damage caused by salvage operations.

3.04 TEMPORARY EROSION CONTROLS

A. See 31 25 00 Erosion and Sedimentation Controls

B. Comply with the City, State, and Federal requirements for the minimization and control of sediment erosion and site run-off in storm water resulting from construction activities. Install temporary erosions controls prior to SITE CLEARING. Comply with the requirements of the Storm Water Pollution Prevention Plan and the permit(s) issued by the City and State.

3.05 UTILITY SERVICES AND MECHANICAL/ELECTRICAL SYSTEMS

A. Existing Utilities to be Disconnected: Locate, identify, disconnect, and seal or cap off utilities serving buildings and structures to be demolished.

1. Arrange to shut off utilities with utility companies.
2. If removal, relocation, or abandonment of utility services will affect adjacent occupied buildings, then provide temporary utilities that bypass buildings and structures to be demolished and that maintain continuity of service to other buildings and structures.
3. Cut off pipe or conduit a minimum of 36 inches below grade. Cap, valve, or plug and seal remaining portion of pipe or conduit after bypassing according to requirements of authorities having jurisdiction.
4. Do not start demolition work until utility disconnecting and sealing have been completed and verified in writing.

3.06 PROTECTION

A. Existing Facilities: Protect adjacent walkways, loading docks, building entries, and other building facilities during demolition operations. Maintain exits from existing buildings.

B. Temporary Shoring: Provide and maintain interior and exterior shoring, bracing, or structural support to preserve stability and prevent unexpected movement or collapse of construction being demolished.

1. Strengthen or add new supports when required during progress of demolition.

C. Existing Utilities to Remain: Maintain utility services to remain and protect from damage during demolition operations.

1. Do not interrupt existing utilities serving adjacent occupied or operating facilities unless authorized in writing by Owner and authorities having jurisdiction.
   a. Provide temporary services during interruptions to existing utilities, as acceptable to Owner and authorities having jurisdiction.
2. Provide at least 72 hours' notice to occupants of affected buildings if shutdown of service is required during changeover.

D. Temporary Protection: Erect temporary protection, such as walks, fences, railings, canopies, and covered passageways, where required by authorities having jurisdiction and as indicated.

1. Protect adjacent buildings and facilities from damage due to demolition activities.
2. Protect existing site improvements, appurtenances, and landscaping to remain.
3. Erect a plainly visible fence around drip line of individual trees or around perimeter drip line of groups of trees to remain.
4. Provide temporary barricades and other protection required to prevent injury to people and damage to adjacent buildings and facilities to remain.
5. Provide protection to ensure safe passage of people around building demolition area and to and from occupied portions of adjacent buildings and structures.
6. Protect walls, windows, roofs, and other adjacent exterior construction that are to remain and that are exposed to building demolition operations.
7. Erect and maintain dustproof partitions and temporary enclosures to limit dust, noise, and dirt migration to occupied portions of adjacent buildings.

E. Remove temporary barriers and protections where hazards no longer exist. Where open excavations or other hazardous conditions remain, leave temporary barriers and protections in place.

3.06 DEMOLITION, GENERAL

A. General: Demolish indicated buildings and site improvements completely. Use methods required to complete the Work within limitations of governing regulations and as follows:

1. Do not use cutting torches until work area is cleared of flammable materials. Maintain portable fire-suppression devices during flame-cutting operations.
2. Maintain fire watch during and for at least 2 hours after flame-cutting operations.
3. Maintain adequate ventilation when using cutting torches.
4. Locate building demolition equipment and remove debris and materials so as not to impose excessive loads on supporting walls, floors, or framing.

B. Site Access and Temporary Controls: Conduct building demolition and debris-removal operations to ensure minimum interference with roads, streets, walks, walkways, and other adjacent occupied and used facilities.

1. Do not close or obstruct streets, walks, walkways, or other adjacent occupied or used facilities without permission from Owner and authorities having jurisdiction. Provide alternate routes around closed or obstructed trafficways if required by authorities having jurisdiction.
2. Use water mist and other suitable methods to limit spread of dust and dirt. Comply with governing environmental-protection regulations. Do not use water when it may damage adjacent construction or create hazardous or objectionable conditions, such as ice, flooding, and pollution.

C. Explosives: Use of explosives is not permitted.

3.07 DEMOLITION BY MECHANICAL MEANS

A. Proceed with demolition of structural framing members systematically, from higher to lower level. Complete building demolition operations above each floor or tier before disturbing supporting members on the next lower level.

B. Remove debris from elevated portions of the building by chute, hoist, or other device that will convey debris to grade level in a controlled descent.

1. Remove structural framing members and lower to ground by method suitable to minimize ground impact and dust generation.

C. Salvage: Items to be removed and salvaged are indicated below:

1. Coordinate with Owner prior to demolition.

D. Below-Grade Construction: Demolish foundation walls and other below-grade construction.

1. Remove below-grade construction, including basements, foundation walls, and footings, completely.

E. Existing Utilities: Demolish existing utilities and below-grade utility structures that are within 8 feet outside footprint indicated for new construction. Abandon utilities outside this area.

1. Fill abandoned utility structures with satisfactory soil materials according to backfill requirements in Section 31 23 00 Excavation and Fill.

F. Hydraulic Elevator Systems: Demolish and remove elevator system, including cylinder, plunger, well assembly, steel well casing and liner, oil supply lines, and tanks.

G. Pavement: Demolish pavement in sections. Cut pavement full depth at junctures with construction to remain and at regular intervals using power-driven saw, then remove pavement between saw cuts. Pavement shall be saw cut in straight lines.

3.08 SITE RESTORATION

A. Below-Grade Areas: Rough grade below-grade areas ready for further excavation or new construction.

B. Site Grading: Uniformly rough grade area of demolished construction to a smooth surface, free from irregular surface changes. Provide a smooth transition between adjacent existing grades and new grades.

3.09 REPAIRS

A. Promptly repair damage to adjacent buildings caused by demolition operations.

3.10 DISPOSAL OF DEMOLISHED MATERIALS

A. Remove demolition waste materials from Project site and dispose of them in an EPA-approved construction and demolition waste landfill acceptable to authorities having jurisdiction.

1. Do not allow demolished materials to accumulate on-site.
2. Remove and transport debris in a manner that will prevent spillage on adjacent surfaces and areas.

B. Do not burn demolished materials.

3.11 CLEANING

A. Clean adjacent structures and improvements of dust, dirt, and debris caused by building demolition operations. Return adjacent areas to condition existing before building demolition operations began.

1. Clean roadways of debris caused by debris transport.

END OF SECTION

SECTION 03 1000

CONCRETE FORMING AND ACCESSORIES

PART 1 - GENERAL

1.1 WORK INCLUDED

A. This section includes formwork for cast-in-place concrete, including water stops, and installation of embedded items.

1.2 RELATED WORK SPECIFIED ELSEWHERE

A. Concrete Reinforcement - Section 03 2000

B. Cast-In-Place Concrete - Section 03 3000

C. Under-Slab Vapor Retarder – Section 07 2600

1.3 QUALITY ASSURANCE

A. Comply with the American Concrete Institute Standard, ACI 347-04, Recommended Practice for Concrete Formwork.

1.4 REFERENCE STANDARDS

A. American Society for Testing and Materials (ASTM), latest versions.

1.	ASTM D 226	Specification for Asphalt - Saturated Organic Felt used in Roofing and Waterproofing"
2.	ASTM D 1751	Specification for Preformed Expansion Joint Filler for Concrete Paving and Structural Construction (Nonextruding and Resilient Bituminous Types)

PART 2 - PRODUCTS

2.1 MATERIALS

A. Forms for Exposed Finish Concrete: Plywood complying with Voluntary Product Standard PS 1-07 "B-B (Concrete Form) Plywood", Class I, Exterior Grade or better or metal, metal-framed plywood or other acceptable panel-type materials. Plywood shall be mill-oiled and edge-sealed, with each piece bearing legible inspection trademark. Furnish in largest practicable sizes to minimize number of joints. Provide form material with sufficient thickness to withstand pressure of newly placed concrete without bow or deflection.

B. Forms for Unexposed Finish Concrete: Use plywood, lumber, metal or other acceptable material. Provide lumber dressed on at least 2 edges and one side for tight fit.

C. Form Coatings: Commercial formulation that will not bond with, stain, or adversely affect concrete surfaces, and will not impair subsequent treatments of concrete surfaces.

D. Chamfer Strips: ¾ inch by ¾ inch wood, PVC, or rubber.

E. Preformed Construction Joint: 24-gage steel, galvanized, shaped to form a continuous tongue and groove key.

F. Preformed Control Joint: Rigid plastic or metal strip with removable top section.

G. Expansion Joint Material: Asphalt saturated fiberboard, ½ inch thick, meeting the requirements of ASTM D 1751.

H. Felt: Asphalt-saturated organic felt, weighing 30 pounds per 100 square feet, meeting the requirements of ASTM D 226.

I. Water stops: Volclay RX manufactured by Colloid Environmental Technologies Co. (CETCO).

J. Recycled Content: Minimum 5 percent post-consumer content, or minimum 20 percent pre-consumer recycled content at contractor's option.

PART 3 - EXECUTION

3.1 COORDINATION

A. Coordinate the installation of joint materials and moisture barriers with placement of forms and reinforcing steel. Set screeds accurately. Embedded items shall be accurately aligned and adequately supported. Verify installation of mechanical, plumbing, and electrical items to be embedded in concrete. Correct any unsatisfactory condition before proceeding further.

3.2 PREPARATION

A. Form Coating: Coat contact surfaces of forms with a form coating compound before reinforcement is placed. Thin form-coating compounds with thinning agent and apply as specified in manufacturer's instructions. Do not allow excess form-coating material to accumulate in forms or to come into contact with concrete surfaces against which fresh concrete will be placed.

3.3 INSTALLATION

A. Formwork: Formwork shall support vertical and lateral loads that are applied until such loads can be supported by concrete structure. Formwork shall be readily removable without impact, shock or damage to cast-in-place concrete surfaces and adjacent materials. Construct forms to sizes, shapes, lines and dimensions shown. Perform surveys to obtain accurate alignment. Provide for recesses, chamfers, blocking, anchorages, inserts, and other features required in work. Select materials to obtain required finishes. Butt joints solidly and provide backup at joints to prevent leakage of cement paste.

B. Chamfer Strips: Provide at exposed corners and edges.

C. Form Ties: Use factory fabricated, adjustable-length, removable or snap-off metal form ties, designed to prevent form deflection and to prevent spalling concrete surfaces upon removal.

D. Cleaning and Tightening: Thoroughly clean forms and adjacent surfaces to receive concrete. Remove chips, wood, sawdust, dirt, or other debris before concrete is placed. Retighten forms and bracing after concrete placement as required to eliminate mortar leaks and maintain proper alignment.

3.4 INSTALLATION OF EMBEDDED ITEMS

A. General: Set anchorage devices and other embedded items accurately. Use setting drawings, diagrams, templates and printed instructions provided by supplier. Secure embedded items such that they are not displaced during placement of concrete.

B. Water stops: Install according to manufacturers printed instructions. Splice water stop sections using square cut butt joints and fuse sections together with indirect heat from preheated splicing iron. Use of direct flame is prohibited.

1. Place water stops in all concrete construction joints in basement walls around the building perimeter that are exposed to soil, weather, or moisture, and in any other construction joints that have the potential to allow water infiltration into the building.

3.5 JOINTS

A. Construction Joints in Elevated Slabs and Beams: Construction joints in Elevated Slabs, Beams, Grade Beams, and other flexural members shall only be made as shown in the contract drawings or as approved by the Engineer of Record. Joints shall be constructed in accordance with ACI 318 Section 6.4 with provisions made for the transfer of shear and other forces. Reinforcement shall be continuous through these joints unless noted otherwise.

B. Construction Joints in Walls, Foundations, and Slabs on Grade: Provide keyways at least 1 ½ inches deep in vertical construction joints in walls and construction joints in slabs on grade and foundations. Discontinue every other horizontal bar through slab on grade construction joints unless noted otherwise.

C. Preformed Construction Joint for Slabs on Grade: Secure with galvanized steel stakes, 1/8 inch thick by 1-1/8 inches wide with ½ inch deep rib and tapered point. Splice adjoining joints with 24 gage steel, galvanized splice plates.

D. Isolation Joints in Slabs on Grade: Construct isolation joints in interior slabs using 30 lb. felt. Provide isolation joints at points of contact between slabs on grade and vertical surfaces, such as column pedestals, foundation walls, grade beams and elsewhere as indicated. Construct isolation joints on exterior slabs abutting vertical surfaces with ½ inch thick expansion joint material.

E. Control Joints in Slabs-on-Grade:

1. Preformed Strip: Insert premolded rigid plastic, or metal strip into fresh concrete. Cut groove for strip using 10-foot long straight edge cutting tool. Depths of strip shall be one fourth of slab thickness. Press strip into groove such that top of strip is level with the concrete surface. Pull off removable top section, if any, prior to troweling.

2. Saw Cut: Contractor may saw cut control joints instead of using preformed strips. Saw cut joints shall be 1/8 inch wide. Saw cut depth should equal 1/4 of slab depth. Cut joints after concrete has hardened sufficiently to prevent raveling; usually 4 to 12 hours after slab has been cast and finished. Use diamond or silicone-carbide blades.

F. Control Joints in Walls: Create weakened planes in cantilevered retaining walls at 25 feet on center. Use preformed strips, placed vertically, full height in each face of wall. Depth of strips shall be one inch. All joints shall be sealed with continuous pliable sealant.

3.6 REMOVAL OF FORMWORK

A. General: Prevent excessive deflection, distortion, and damage to concrete when forms are stripped. Provide crush plates or wrecking plates where stripping may damage cast concrete surfaces.

B. Formwork and supports at sides of concrete shall remain in place for 24 hours after concrete placement. This period represents cumulative number of hours, not necessarily consecutive, during which the temperature of the air surrounding the concrete is above 50 degrees F. Formwork and shoring which support the weight of concrete shall not be removed until concrete has attained its specified compressive strength.

C. Ensure safety of the structure. Do not superimpose any load on concrete until forms are removed and concrete is cured.

3.7 RE-USE OF FORMS

A. General: Clean and repair surfaces of forms to be re-used in work. Split, frayed, delaminated, or otherwise damaged form facing material will not be acceptable for exposed surfaces. Apply new form coating compound as specified for new formwork.

When forms are intended for successive concrete placement, thoroughly clean surfaces and remove fins and latence. Align and secure joints to avoid offsets. Do not use "patched" forms for exposed concrete surfaces.

END OF SECTION

SECTION 03 2000

CONCRETE REINFORCEMENT

PART 1 - GENERAL

1.1 WORK INCLUDED

A. This section includes fabrication and installation of deformed bar and welded wire fabric reinforcing steel.

1.2 RELATED WORK SPECIFIED ELSEWHERE

A. Concrete Forming and Accessories - Section 03 1000.

B. Cast In Place Concrete - Section 03 3000.

1.3 QUALITY ASSURANCE

A. Reference Standards:

1. American Concrete Institute (ACI), latest versions.

a.	ACI 301	Specifications for Structural Concrete for Buildings
b.	ACI 315	Details and Detailing of Concrete Reinforcement
c.	ACI 318	Building Code Requirements for Structural Concrete

2. American Society for Testing and Materials (ASTM)

a.	ASTM A 82/ A82M	Standard Specification for Steel Wire, plain, for Concrete Reinforcement
b.	ASTM A 185/ A185M	Standard Specification for Steel Welded Wire Reinforcement, Plain, for Concrete
c.	ASTM A 615/ A 615M	Standard Specification for Deformed and Plain Carbon-Steel Bars for Concrete Reinforcement

3. Concrete Reinforcing Steel Institute (CRSI). Design Handbook - latest Edition

1.4 SUBMITTALS

A. Shop Drawings: Submit shop drawings for reinforcing steel. Comply with ACI 315 requirements showing layout, bar schedules, stirrup spacing, diagrams of bent bars, and arrangement of reinforcing steel. Shop Drawings shall not be made by reproduction of the Contract Drawings.

PART 2 - PRODUCTS

2.1 MATERIALS

A. Reinforcing Bars: ASTM A 615, Grade 60. Stirrups and ties may be Grade 40.

B. Welded Wire Fabric: ASTM A 185, flat sheets.

C. Steel Wire: ASTM A 82, 16 gage.

D. Supports for Reinforcing Steel: Wire bar type and precast concrete block type meeting the requirements of CRSI Manual of Standard Practice.

2.2 FABRICATION

A. Fabricate reinforcing steel in accordance with fabricating tolerances in ACI 315.

B. Do not fabricate reinforcing steel until shop drawings are approved.

PART 3 - EXECUTION

3.1 PLACING BAR SUPPORTS

A. General: Provide bar supports meeting the requirements of CRSI Specification for Placing Bar Supports.

B. Slabs-on-grade: Use supports with sand plates or precast concrete blocks or horizontal runners where base material will not support chair legs.

3.2 PLACING REINFORCING STEEL

A. General: Comply with CRSI Code of Standard Practice for "Placing Reinforcing Bars".

B. Clean reinforcing steel of loose rust and mill scale, earth, ice, and other materials, which reduce or destroy bond with concrete.

C. Accurately position, support and secure reinforcing steel against displacement by formwork, construction, or concrete placement operations. Place reinforcing steel to obtain minimum coverages. Arrange, space and securely tie bars and bar supports to hold reinforcing steel in position during concrete placement operations. Set wire ties so ends are directed into concrete, not toward exposed concrete surfaces.

Concrete Cover:	
Concrete cast against and permanently exposed to earth	3 inches
Concrete exposed to earth or weather:	
Bars larger than No. 5	2 inches
Bars No. 5 or smaller.	1 ½ inches

D. Rebar Splices: Locate at points of minimum stress or as shown on contract drawings. Unless noted otherwise, provide lap splices 30 bar diameters (18 inches minimum) in length.

E. Welded Wire Fabric Splices: Lap one complete wire spacing.

F. Corner Reinforcing: Provide corner bars of same size and spacing as horizontal reinforcing steel. Lap with horizontal reinforcing 30 bar diameters or 18 inches minimum length.

G. Reinforcing at Construction/Control Joints: Continue reinforcing steel through construction joints unless noted otherwise. Discontinue reinforcing steel 2 inches from preformed construction joints in slabs-on-grade. Cut alternate longitudinal bars at weakened plane control joints in walls.

END OF SECTION

SECTION 03 3000

CAST IN PLACE CONCRETE

PART 1 - GENERAL

1.1 WORK INCLUDED

A. This section covers cast-in-place concrete including finishing, surface repair and curing.

1.2 RELATED WORK SPECIFIED ELSEWHERE

A. Concrete Forming and Accessories - Section 03 1000

B. Concrete Reinforcement - Section 03 2000

C. Under Slab Vapor Retarder – Section 07 2600

1.3 QUALITY ASSURANCE

A. Reference Standards: Meet the requirements of the following codes, specifications and standards.

1. American Concrete Institute (ACI) Publications, latest versions;

a.	ACI 301	Specifications for Structural Concrete for Buildings
b.	ACI 306.1	Standard Specification for Cold Weather Concreting
c.	ACI 318	Building Code Requirements for Structural Concrete.

2. ASTM International (ASTM);

a.	ASTM C 31/ C31M	Standard Practice for Making and Curing Concrete Test Specimens in the Field
b.	ASTM C 33/ C33M	Standard Specification for Concrete Aggregates
c.	ASTM C 39/ C39M	Standard Test Method for Compressive Strength of Cylindrical Concrete Specimens
d.	ASTM C 94/ C 94M	Standard Specification for Ready-Mixed Concrete
e.	ASTM C 131	Standard Test Method for Resistance to Degradation of Small-Size Coarse Aggregate by Abrasion and Impact in the Los Angeles Machine
f.	ASTM C 136	Standard Test Method for Sieve Analysis of Fine and Coarse Aggregates

g.	ASTM C 143 C 143M	Standard Test Method for Slump of Hydraulic Cement Concrete
h.	ASTM C 150/ C150M	Standard Specification for Portland Cement
i.	ASTM C 171	Standard Specification for Sheet Materials for Curing Concrete
j.	ASTM C 172/ C172M	Standard Practice for Sampling Freshly Mixed Concrete
k.	ASTM C 173/ C 173M	Standard Test Method for Air Content of Freshly Mixed Concrete by the Volumetric Method
l.	ASTM C 231/ C231M	Standard Test Method for Air Content of Freshly Mixed Concrete by the Pressure Method
m.	ASTM C 260/ C260M	Standard Specification for Air Entraining Admixtures for Concrete
n.	ASTM C 309	Standard Specification for Liquid Membrane-Forming Compounds for Curing Concrete
o.	ASTM C 330/ 330M	Standard Specification for Lightweight Aggregates for Structural Concrete
p.	ASTM C 494/ C 494M	Standard Specification for Chemical Admixtures for Concrete
q.	ASTM C 567	Standard Test Method for Determining Density of Structural Lightweight Concrete
r.	ASTM C 618	Standard Specification for Coal Fly Ash and Raw or Calcined Natural Pozzolan for Use in Concrete
s.	ASTM D 4318	Standard Test Method for Liquid Limit, Plastic Limit, and Plasticity Index of Soils

B. Environmental Requirements: Manufacturer and Contractor shall conform to Federal, State, and Local V.O.C. (Volatile Organic Compound) Regulations in area where Project is located. Notify A/E in writing if variations to Specifications herein are required.

1. V.O.C. content shall be a maximum 250 (55) gm/liter, unless more stringent codes or laws apply.

1.4 SUBMITTALS

A. Product Data: Submit manufacturer's product data with application and installation instructions for proprietary materials and admixtures.

B. Concrete Mix Design:

1. Submit mix design in accordance with ACI-301, Section 4.

2. Submit with mix design results of laboratory tests performed within previous 12 months indicating aggregates from the proposed source comply with the requirements of ASTM C 33 or C 330 as applicable.

3. Submit the proposed area of use for each mix design submitted (footings, stemwalls, slabs, walls, columns, etc.).

C. Granular Base Course: Submit gradation, plasticity index, and wear information.

D. Test Reports: Submit copies of test reports for concrete compressive strength, air content, temperature and slump. Submit copies of granular base course test reports.

1.5 QUALITY ASSURANCE

A. Manufacturer Qualifications: A firm experienced in manufacturing ready-mixed concrete products and that complies with ASTM C 94/C 94M requirements for production facilities and equipment.
Manufacturer certified according to NRMCA's "Certification of Ready Mixed Concrete Production Facilities."

B. Environmental Requirements: Manufacturer and Contractor shall conform to Federal, State, and Local V.O.C. (Volatile Organic Compound) Regulations in area where Project is located. Notify A/E in writing if variations to Specifications herein are required.

1. V.O.C. content shall be a maximum 250 (55) gm/liter, unless more stringent codes or laws apply.

PART 2 - PRODUCTS

2.1 MATERIALS

A. Portland Cement: ASTM C 150, Type I or II, low alkali. Use one brand of cement throughout project.

B. Normal Weight Aggregates: ASTM C 33. Provide aggregates from a single source for exposed concrete.

C. Water: Potable.

D. Air-Entraining Admixture: ASTM C 260.

E. Water Reducing Admixture: ASTM C 494.

F. Fly-Ash: ASTM C 618, Class C.

G. Concrete Admixture: Concure Systems Admixture for waterproofing in all concrete for slabs-on-grade and elevated slabs to receive floor finishes.

H. Crystalline Waterproofing Admixture: By Xypex, BASF or W.R. Meadows

I. Moisture-Retaining Cover: Provide waterproof paper, polyethylene film, or polyethylene-coated burlap meeting the requirements of ASTM C 171.

J. Liquid Membrane-Forming Curing Compound: Liquid type membrane-forming curing compound meeting the requirements of ASTM C 309; Type 1-D with fugitive dye for interior concrete and foundations; Type 2, white pigmented, for exposed exterior concrete except exposed exterior Architectural concrete, use Type 1-D.

Curing compound shall NOT be used on interior slabs, except exposed integrally colored concrete slabs. Curing compound to be used on integrally colored concrete slabs shall be approved by the manufacturer of the color.

K. Vapor Retarder shall comply with Section 07 26 00 of these Specifications.

L. Granular base shall meet the following grading requirements when tested in accordance with ASTM C 136.

Granular base shall meet the gradation and material properties requirements as listed in the General Structural Notes.

The plasticity Index shall be no greater than 3 when tested in accordance with ASTM D 4318. The coarse aggregate shall have a percent wear of 50 or less when tested in accordance with ASTM C 131.

2.2 PROPORTIONING AND DESIGN OF MIXES

A. Prepare design mixes for each type and strength of concrete by either laboratory trial mixture or field experience methods as specified in ACI 301, Section 4. If trial mixture method is used, employ an independent testing facility, acceptable to Architect, for preparing and reporting proposed mix designs.

B. Submit written reports to Architect, or Engineer, of each proposed mix for each class of concrete at least 15 days prior to start of work. Do not begin concrete production until mixes have been approved.

C. Refer to the General Structural Notes for concrete strengths.

D. Slabs-on-ground or on vapor retarder shall have a water/total cementitious ratio not to exceed 0.45.

E. Admixtures

1. Use water reducing admixture conforming to ASTM C 494, Type A, in all concrete unless approved otherwise by the Structural Engineer.

2. All other admixtures shall have the written approval of the Architect or Structural Engineer.

3. Calcium chloride is not permitted.

4. All admixtures, except high range water reducers, shall be added to the concrete at the batch plant.

5. Use Concure Systems Admixture for waterproofing in all interior concrete for slabs-on-grade and interior elevated slabs to receive floor finishes.

6. Use crystalline waterproofing admixture in all exterior exposed concrete for balcony slabs.

PART 3 - EXECUTION

3.1 COORDINATION

A. Coordinate the installation of joint materials and moisture barriers with placement of forms and reinforcing steel. Set screeds accurately. Embedded items shall be accurately aligned and adequately supported. Verify installation of mechanical, plumbing, and electrical items to be embedded in concrete. Correct any unsatisfactory condition before proceeding further.

3.2 PREPARATION

A. Before placing concrete, clean and roughen surface of previously placed concrete. Clean reinforcing steel. Remove debris, providing clean-outs at bottom of forms when necessary. Moisten surfaces to receive concrete unless otherwise prepared. Remove excess water before placing concrete.

3.3 CONCRETE PLACEMENT

A. General: Comply with ACI 301.

B. Place concrete continuously in layers not deeper than 24 inches. Concrete shall not be placed against concrete which has hardened sufficiently to cause the formation of seams or planes of weakness. If a section cannot be placed continuously, provide construction joints. Deposit concrete as nearly as practicable to its final location to avoid segregation. Do not use vibrators to transport concrete.

C. Maintain reinforcing in proper position during concrete placement operations.

D. Consolidate concrete, immediately after placing, by mechanical vibrating equipment supplemented by hand-spading, rodding or tamping. Use equipment and procedures for consolidation of concrete in accordance with ACI recommended practices.

E. Bring slab surfaces to correct level with straightedge and strikeoff. Use bull floats or darbies to smooth surface. Do not disturb slab surfaces prior to beginning finishing operations.

F. Cold Weather Concreting: Protect concrete work from physical damage or reduced strength caused by frost, freezing or low temperatures. Comply with ACI 306.1.

G. Hot Weather Concreting: When hot weather conditions exist that would impair quality and strength of concrete, reduce delivery time of ready mix concrete, lower the temperature of materials, or add retarder to ensure that the concrete is plastic. Retempering with water is not allowed. Comply with ACI 305R.

3.4 FINISH OF FORMED SURFACES

A. Rough Form Finish: Provide where formed concrete surfaces are not exposed to view. Tie holes and surface imperfections shall be repaired and patched and fins and other projections exceeding ¼ inch in height rubbed down or chipped off.

3.5 FINISH OF HORIZONTAL SURFACES

A. At tops of foundation walls and grade beams finish with a texture matching adjacent formed surfaces unless otherwise indicated.

3.6 SLAB FINISHES

A. Float Finish: Begin floating when surface water has disappeared and when concrete has stiffened sufficiently to permit operation of power-driven or hand floats. Consolidate surface with power-driven floats, or by hand-floating if area is small or inaccessible to power units. Check and level surface plane to a tolerance not exceeding ¼ inch in 10 feet when tested with a 10 foot straightedge.

B. Scratch Finish: Apply scratch finish to slab surfaces that are to receive floor topping. Roughen surface before final set, using stiff brushes, or brooms.

C. Trowel Finish: Apply trowel finish to all slab surfaces unless noted otherwise. After floating, begin first trowel finish using a power-driven or hand trowel. Finish concrete surface by a final hand-trowel operation, free of trowel marks, and uniform in texture and appearance. The final surface finish for slabs-on-grade shall have a minimum FF = 25 and a minimum FL = 20 per ACI requirements. The final surface finish for elevated slabs shall have a minimum FF = 25. Verify with Architectural requirements.

D. Broom Finish: Apply on exterior slabs, ramps, steps, and sidewalks. Immediately after concrete has received a float finish, draw a broom or burlap belt across the surface to give a coarse transverse scored texture.

3.7 CONCRETE CURING AND PROTECTION

A. General: Protect freshly placed concrete from premature drying and excessive cold or hot temperatures. Start initial curing as soon as free water has disappeared from concrete surface after placing and finishing. Continue curing for at least 7 days.

B. Moisture-retaining Cover curing: All interior concrete slabs, except exposed integrally colored concrete slabs, are to be cured with a moisture retaining cover for the first 7 days. After that time, the cover shall be removed and the slab should be allowed to dry. Cover concrete surfaces with moisture-retaining cover for curing concrete, placed in widest practicable width with sides and ends lapped at least 3 inches and sealed. Repair any holes or tears in cover during curing period.

C. Curing compound: At contractor’s option, exterior concrete slabs may be cured using curing compound. All vertical concrete (walls, beams, etc…) shall be cured using curing compound – apply compound to the vertical surface as soon as the forms are removed. Apply curing compound uniformly in accordance with the manufacturer's printed instructions. Curing compound shall NOT be used on interior slabs, except exposed integrally colored concrete slabs.

D. Exposed integrally colored concrete slabs: Use curing compound recommended by the concrete supplier. Apply with and airless sprayer.

3.8 CONCRETE SURFACE REPAIRS

A. Patching Surface Imperfections: Remove loose material and patch surface imperfections and holes left by tie rods with cement mortar. Surface imperfections include honeycomb, excessive air voids, sand streaking and cracks.

3.9 FOR EXPOSED-TO-VIEW SURFACES

A. Blend white portland cement and standard portland cement so that, when dry, patching mortar will match color surrounding. Provide test areas at inconspicuous location to verify mixture and color match before proceeding with patching. Compact mortar in place and strike-off slightly higher than surrounding surface.

3.10 FIELD QUALITY CONTROL

A. The Owner shall employ the services of a qualified testing laboratory to perform tests and submit test reports.

B. Sampling Fresh Concrete: ASTM C 172.

C. Slump: ASTM C 143; one test for each set of compressive strength test specimens.

D. Air Content: ASTM C 173 or C 231 for each set of compressive strength test specimens.

E. Concrete Temperature: Test hourly when air temperature is 40 degrees F. and below, when 80 degrees F and above; and when compression test specimens are made.

F. Compression Test Specimen: ASTM C 31, one set of 4 standard cylinders for each compressive strength test, unless otherwise directed. Mold and store cylinders for laboratory cured test specimens except when field cure test specimens are required. Mold one set of standard cylinders for volume of concrete specified below or fraction thereof.

1. At least once a day
2. At least once for each 150 cubic yds
3. At least once for each 5000 square feet of surface area for slabs or walls. (This amounts to 61 cubic yards for a 4 inch slab, 77 cubic yards for a 5 inch slab and 124 cubic yards for an 8 inch wall.)

G. Compressive Strength Tests: ASTM C 39; test 1 specimen at 7 days, 2 specimens at 28 days, and retain one specimen in reserve for later testing. Additional Tests: The testing laboratory will make additional tests of in-place concrete when test results indicate specified concrete strengths and other characteristics have not been attained in the structure as directed by the Architect. The testing laboratory may conduct tests to determine adequacy of concrete by cored cylinders complying with ASTM C 42 or by other methods as directed by the Architect or Engineer. The Owner shall pay for such tests conducted, and any other additional testing as may be required, when unacceptable concrete is verified.

H. Granular Base Course: ASTM C 136 and ASTM D 4318 for every 500 square yards of building slab area.

END OF SECTION

SECTION 03 3500

CONCRETE FINISHING

PART 1 - GENERAL

1.1 SUMMARY

A. Work required for this Section includes concrete finishing of cast-in-place concrete including supplementary products necessary to complete the concrete installation.

1.2 DEFINITIONS

A. Curing: Action taken by which hydraulic-cement concrete matures and develops hardened properties over time as result of continued hydration of cement in presence of sufficient water and heat.

B. Envelope: Vertical distance between two level lines or planes.

C. Flatness: Degree to which surface approximates plane.

D. Levelness: Degree to which line or surface parallels horizontal. Horizontal is normal to direction of gravity.

E. Minimum Local Value: Minimum local F(F) or F(L) value at given floor level, taken within one floor test area defined as Minimum Local Area.

1. Boundaries of Minimum Local Areas may not cross construction joints.
2. Slabs-on-Grade: Minimum Local Area will be bounded by construction and/or control joints, or by column lines and half-column lines, whichever is smaller.
3. Elevated Slabs: Minimum Local Area will be bounded by column lines and/or half-column lines.

F. Specified Overall Value: Composite value of samples taken at given level, regardless of number of concrete placements required to complete level. Specified overall F-numbers represent minimum values allowed for entire floor, looked at as whole.

1.3 ACTION SUBMITTALS

A. Product Data: Submit copies of manufacturers' technical literature for specified products.

1. Include manufacturer's specifications for materials, finishes, construction details, installation instructions, and recommendations for maintenance.
2. Submittal(s) shall identify location(s) of Contractor’s intended application of product(s).

1.4 INFORMATIONAL SUBMITTALS

A. Product Test Reports: Written reports based on evaluation of comprehensive tests performed by qualified testing agency indicating that each product complies with requirements.

B. Field Quality Control Reports: Written report of testing and inspection required by "Field Quality Control".

C. Manufacturer(s) Project Acceptance Document: Certification by the manufacturer that its product(s) are approved, acceptable, suitable for use in specific locations, for specific details, and for applications indicated, specified, or required, and that a warranty will be issued.

D. Qualification Data:

1. For firms and persons specified in "Quality Assurance" to demonstrate their capabilities and experience. Include list of completed projects.

E. Work Plan for Out-of-Tolerance Floor Surfaces:

1. Detailed work plan for areas where remedial measures are necessary to correct unsatisfactory as-built floor flatness/levelness conditions. Include following information:
2. Specific boundaries of area to receive remedial work
3. Methods and products proposed.
4. Grout/topping/underlayment product literature.

F. Repair Records: At conclusion of project, submit record of repairs as part of job close-out information. Record shall be complete in detail and will serve as Owner's documentation of repairs made to concrete work. Include following information.

1. Location and size of repair. Include individual identification number for each repair and provide dimension(s) from established grids, elevations, and approximate repair size.
2. Statement of reason(s) for repair.
3. Repair material(s) applied.
4. Date of repair application.
5. Name(s) of trained installer used for each repair.

1.5 QUALITY ASSURANCE

A. Manufacturer Qualifications: Manufacturer with not less than 5 years of experience in the successful production and in-service performance of products and systems similar to scope of this Project.

B. Installer Qualifications for Specialized Concrete Finishes:

1. Experience: Installer's personnel with not less than 5 years of experience in the successful performance of Work similar to scope of this Project.
2. Supervision: Installer shall maintain a competent supervisor at Project while the Work is in progress, and who has not less than 5 years of experience installing products and systems similar to scope of this Project.
3. Manufacturer Acceptance: Installer shall be certified, approved, licensed, or acceptable to manufacturer to install products including but not limited to the following:

a. Overlay and repair mortar.
b. Crack repair/injection.

C. Mock-Ups for Specialized Concrete Finishes: Prior to fabrication and installation, build mock-up for each form of construction and finish required to verify selections made under sample Submittals and to demonstrate aesthetic effects and qualities of materials and execution. Build mock-up using materials indicated for the completed Work.

1. Build mock-up in the location and of the size indicated or, if not indicated, as directed by Architect. Contractor shall provide structural support framework.

    a. Show typical components, attachments to building structure, and requirements of installation.

2. Notify Architect seven days in advance of the dates and times when mock-up will be installed.
3. Obtain Architect's acceptance of mock-ups before starting fabrication or installation.
4. Acceptance of mock-ups does not constitute acceptance of deviations from the Contract Documents contained in mock-ups unless such deviations are specifically noted by Contractor and accepted by Architect in writing.
5. Demolish and remove mock-ups when directed by Architect unless accepted to become part of the completed Work.

1.6 PRE-INSTALLATION CONFERENCE

A. Pre-Installation Conference: Before Work begins, conduct conference at Project site.

1. Participants:

    a. Architect.
    b. Contractor, including superintendent.
    c. Installer, including project manager and supervisor.
    d. If requested, Manufacturer's qualified technical representative.
    e. Installers of other construction interfaced with Work.

2. Minimum Agenda: Installer shall demonstrate understanding of the Work required by describing detailed procedures for preparing, installing, and cleaning the Work. Demonstration shall include, but not be limited to, following topics:

    a. Tour representative areas of Work, inspect and discuss condition of substrate, and other preparatory work performed by other trades.
    b. Review Contract Document requirements.
    c. Review approved submittals.
    d. Review inspection and testing requirements.
    e. Review environmental conditions and procedures for coping with unfavorable conditions.
    f. Resolve deviations or differences between Contract Documents and the manufacturer's specifications.

3. Record discussions, including decisions and agreements, and prepare report.

1.7 COORDINATION

A. Coordinate installation of products and systems with interfacing and adjoining construction to provide a successful installation without failure.

B. Coordinate installation of anchorage items to be embedded in or attached to other construction without delaying the Work. Provide setting diagrams, sheet metal templates, instructions, and directions for installation

C. Coordinate openings, penetrations, and sleeve requirements with final equipment selections and locations by MEP sub-contractors. Verify any changes with Engineer of Record prior to fabrication.

PART 2 - PRODUCTS

2.1 MANUFACTURERS AND PRODUCTS

A. Acceptable Manufacturers/Fabricators and Products: Subject to compliance with requirements of Contract Documents as judged by the Architect, provide product by one of manufacturers/fabricators listed. If not listed, submit as substitution according to the Conditions of the Contract and Division 01 Section "Substitution Procedures".

B. Basis of Design (Product Standard): Contract Documents are based on products and systems specified to establish a standard of quality. Other available manufacturers/fabricators offering products having equivalent characteristics may be considered, provided deviations are minor and comply with requirements of Contract Documents as judged by the Architect.

2.2 MATERIALS, GENERAL

A. Single Source Responsibility: Furnish each type of product from single manufacturer. Provide secondary materials only as recommended by manufacturer of primary materials.

2.3 CURING MATERIALS

A. Liquid Membrane-Forming Curing Compound:

1. Description: ASTM C 1315, Type 1, Class A, clear water-based acrylic blend curing compound with 25 percent solid content (minimum); non-yellowing under ultraviolet light after 500 hours of test in accordance with ASTM D 4587; water based, VOC/AIM compliant. Sodium silicate compounds are not acceptable.
2. Manufacturers and Products:

    a. Euclid Chemical Co.; Super Diamond Clear VOX.
    b. Lambert Corp.; UV Safe Seal.
    c. L & M Const. Chemicals; Lumiseal WB Plus.
    d. W.R. Meadows, Inc.; Vocomp-25 or Vocomp-30.

3. Alternate Products: Products listed above are non-yellowing. Other products of same manufacturers which exhibit moderate yellowing in accordance with ASTM C 1315, Type 1, Class B, and comply with other specified requirements and limitations herein may be acceptable pending Architect/Engineer review and approval.

B. Dissipating Resin Membrane-Forming Curing Compound with Fugitive Dye:

1. Description: ASTM C 309, Type 1-D, Class B, water-based and formulated with hydrocarbon resins, which begins chemical break-down after approximately 4 weeks.
2. Manufacturers and Products:

a. Euclid Chemical Co.; Kurez DR VOX.
b. L & M Const. Chemicals; L&M Cure R.
c. Lambert Corp.; Aqua Kure.
d. W.R. Meadows; 1100-Clear Series.

C. Evaporation Retarder:

1. Description: Waterborne monomolecular film-forming compound manufactured for application to plastic concrete, preferably leaving no residue after concrete hardens. Residue remaining after concrete hardens shall be removed in accordance with manufacturer's recommendations.
2. Manufacturers and Products:

a. BASF; MasterKure ER 50 (Formerly Confilm).
b. Euclid Chemical Co.; Eucobar.
c. Lambert Corp.; Lambco Skin.
d. L&M Construction Chemicals, Inc.; E-Con.
e. W.R. Meadows; EVAPRE.
f. Sika Corporation; SikaFilm.

D. Moisture-Retaining Cover:

1. Description: ASTM C 171, curing paper, white opaque polyethylene film, and polypropylene nonwoven fabric with white coating applied to one side, or white burlap-polyethylene sheeting. Polyethylene film not permitted at unformed surfaces. Clear or black polyethylene film permitted at interior formed surfaces with no exposure to sunlight during curing period.
2. Manufacturer and Product:

a. Curing Paper: Fortifiber Corp.; Orange Label, Sisaldraft curing paper.
b. Polyethylene Film: As recommended by Contractor; submit for Architect's review.
c. Polypropylene Nonwoven Fabric:

1) Reef Industries/Armorlon; Transguard 4000.
2) PNA Construction Technologies; Hydracure.
3) Sika Corporation; Ultracure NCF.

d. White Burlap-Polyethylene Sheeting: As recommended by Contractor; submit for Architect's review.

E. Absorptive Cover: AASHTO M 182, Class 2, Burlap cloth made from jute or kenaf, weighing approximately 9 oz. per sq. yd.

2.4 FLOOR AND SLAB TREATMENTS

A. Slip-Resistive Aggregate Finish: Factory-graded, packaged, rustproof, nonglazing, abrasive aggregate of fused aluminum-oxide granules or crushed emery with emery aggregate containing not less than 50 percent aluminum oxide and not less than 25 percent ferric oxide; unaffected by freezing, moisture, and cleaning materials.

B. Mineral Dry-Shake Floor Hardener: Factory-packaged dry combination of portland cement, graded quartz aggregate, coloring pigments, and plasticizing admixture. Use coloring pigments that are finely ground, nonfading mineral oxides interground with cement.

1. Colors: As scheduled in Division 01 Section "Design Selections", or where not scheduled, as selected by Architect from manufacturer's full range of standard colors.
2. Consult with manufacturer's trained technical representative where dry-shake floor hardener will be applied over air-entrained concrete.
3. Manufacturers and Products:

    a. Euclid Chemical Co.; Surflex.
    b. Lambert Corporation; Colorhard.
    c. L&M Construction Chemicals, Inc.; Quartzplate FF.

C. Penetrating Liquid Floor Hardener and Sealer: Chemically reactive, waterborne solution of inorganic silicate or siliconate materials and proprietary components; odorless; colorless; that penetrates, hardens, densifies, and seals concrete surfaces. Minimum manufacturer's written warranty of 10 years to effectively harden, densify, and dustproof concrete surfaces.

1. Manufacturer Products, subject to specified written warranty:

    a. ARDEX Engineered Cements; PC50.
    b. Curecrete Chemical Co., Inc.; Ashford Formula.
    c. Euclid Chemical Co.; Euco Diamond Hard.
    d. L&M Construction Chemicals, Inc.; Seal Hard.

D. Penetrating Liquid Floor Treatments for Polished Concrete Finish: Refer to Division 03 Section "Polished Concrete".

E. Chemical Stain: Acidic, water based solution of metallic salts that penetrate and react with chemicals in concrete to produce insoluble color deposits in the pores without pigments or resins.

1. Basis of Design (Product Standard): L.M. Scofield Company; Lithochrome Chemstain; Color as selected by Architect from manufacturer's full range.

F. Imprinting (Stamping) Tools for Stamped Concrete:

1. Stamp Mats: Semi-rigid polyurethane mats with projecting textured and ridged underside capable of imprinting texture and joint patterns on plastic concrete.
2. Rollers: Manually controlled, water-filled aluminum rollers with projecting ridges on drum capable of imprinting texture and joint patterns on plastic concrete.
3. Texture Rollers: Manually controlled, abrasion-resistant polyurethane rollers capable of imprinting texture on plastic concrete.

2.5 REPAIR MATERIALS

A. Self-Leveling Concrete Underlayment (Non-wear surface):

1. Description: Cement-based, polymer-modified, self-leveling product that can be applied in thicknesses from 1/8 in (3 mm) to 1 in (25 mm) and that can be feathered at edges to match adjacent floor elevations. Interior use only, unless exterior application recommended by manufacturer within written literature.
2. Cement Binder: ASTM C 150, portland cement or hydraulic or blended hydraulic cement as defined in ASTM C 219.

3. Primer: Product of underlayment manufacturer recommended for substrate, conditions, and application.
4. Aggregate: Well-graded, washed sand as recommended by underlayment manufacturer.
5. Compressive Strength: 4,000 psi minimum at 28 days when tested according to ASTM C 109.
6. Substrate Preparation: As recommended by product manufacturer.
7. Basis of Design (Product Standard): Ardex, Inc.; "Ardex K-15".
8. Manufacturers: (Consult manufacturer for specific product and compatibility with substrate conditions. Subject to Architect's and Engineer's review and approval.)

    a. ARDEX Engineered Cements.
    b. BASF
    c. Euclid Chemical Co.
    d. Sika Corporation.

B. Self-Leveling Concrete Topping (Wear surface):

1. Description: Cement-based, polymer-modified, self-leveling product that can be applied in thicknesses from 1/2 in (12 mm) to 2 in (50 mm). Consult manufacturer for thickness exceeding 2 in (50 mm). Interior use only, unless exterior application recommended by manufacturer within written literature.
2. Cement Binder: ASTM C 150, portland cement or hydraulic or blended hydraulic cement as defined in ASTM C 219.
3. Primer: Product of topping manufacturer recommended for substrate, conditions, and application.
4. Aggregate: Well-graded, washed gravel, 1/8 in (3 mm) to 3/8 in (10 mm) or coarse sand as recommended by topping manufacturer for specific application thickness. No coarse aggregate permitted for thicknesses of 1 in (25 mm) or less.
5. Compressive Strength: 5,000 psi minimum at 28 days when tested according to ASTM C 109.
6. Substrate Preparation: As recommended by product manufacturer.
7. Basis of Design (Product Standard): ARDEX Engineered Cements; "Ardex SD-T".
8. Manufacturers: (Consult manufacturer for specific product and compatibility with substrate conditions. Subject to Architect's and Engineer's review and approval.)

    a. ARDEX Engineered Cements.
    b. BASF
    c. Euclid Chemical Co.

C. Epoxy Joint Filler: Two-component, semirigid, 100 percent solids, epoxy resin with a Shore A hardness of 80 per ASTM D 2240.

D. Overlay and Repair Mortar:

1. General: Use of overlay and repair mortar shall be in accordance with manufacturer's application limitations, precautions, and directions for use, including but not limited to surface preparation, mixing, placing, curing, and compatibility with substrate conditions.
2. Product types listed below are basis of design, however, it is recognized by Architect/Engineer that high performance cement based overlay/repair mortars are available which may be satisfactory to specific application. Intent is not to omit such products from consideration. Subject to Architect and Engineer's approval prior to use.
3. Epoxy Mortar:

a. Description: ASTM C 881, acceptable at interior applications only, unless otherwise directed by Engineer; appropriate applications include locations susceptible to high wear or high corrosion.

1) Type I: Acceptable at non-structural applications.
2) Type IV: Acceptable at structural applications.

b. Manufacturers: (Consult manufacturer for specific product and compatibility with substrate conditions. Subject to Engineer's review and approval.)

1) ARDEX Engineered Cements.
2) BASF
3) Euclid Chemical Company.
4) Sika Corporation.

4. Polymer Modified Cementitious Mortar:

a. Description: ASTM C 1059, Type II, acceptable at structural and non-structural applications, interior or exterior.
b. Manufacturers: (Consult manufacturer for specific product and compatibility with substrate conditions. Subject to Engineer's review and approval.)

1) ARDEX Engineered Cements.
2) BASF
3) Euclid Chemical Company.
4) Sika Corporation.

PART 3 - EXECUTION

3.1 EXAMINATION

A. Acceptance of Surfaces and Conditions: Examine substrates to receive concrete finishing, products and systems and associated work for compliance with requirements and other conditions affecting performance. Proceed only when unsatisfactory conditions have been corrected in a manner complying with Contract Documents. Starting work within a particular area will be construed as acceptance of surface conditions.

3.2 INSTALLATION, GENERAL

A. Installation Quality Standards: In addition to standards listed elsewhere, perform Work according to following, unless otherwise specified:

1. Respective manufacturer/fabricator's written installation instructions.
2. Accepted submittals.
3. Contract Documents.

3.3 PREPARATION

A. General: Comply with manufacturer's instructions, recommendations and specifications for cleaning and surface preparation. Surfaces shall have no defects, contaminants or errors which would result in poor or potentially defective installation or would cause latent defects in Work.

3.4 FINISHING FORMED SURFACES (ACI 347)

A. Rough-Formed Finish: Class D and C Surfaces.

1. Definition: As-cast concrete texture imparted by form-facing material with tie holes and defective areas repaired and patched.
2. Procedure: Remove irregularities including but not limited to fins, ravelings, loose material, and other projections exceeding specified limits as measured within 5 foot length of straightedge by rubbing down, chipping off, filling in with approved repair mortar, or combination thereof to satisfactorily complete Work.
3. Locations and Irregularity Limits:

    a. Class D: Maximum abrupt or gradual irregularity limited to 1 in (25 mm).

        1) Concrete surfaces not exposed to view; such as foundations and crawl spaces.

    b. Class C: Maximum abrupt or gradual irregularity limited to 1/2 in (12 mm).

        1) Concrete surfaces not exposed to public view or concrete surfaces concealed by other construction.

B. Smooth-Formed Finish: Class B and A Surfaces.

1. Definition: As-cast concrete texture obtained with selected form-facing material, arranged in orderly and symmetrical manner with minimum of seams.
2. Procedure: Repair and patch tie holes and defective areas. Remove irregularities including but not limited to fins, ravelings, loose material, and other projections exceeding specified limits as measured with 5 foot length straightedge by rubbing down, chipping, off, filling in with approved repair mortar, or combination thereof to satisfactorily complete Work.
3. Locations and Irregularity Limits:

    a. Class B: Maximum abrupt or gradual irregularity limited to 1/4 in (6 mm)

        1) Concrete surfaces to receive coating or covering material applied directly to concrete, such as waterproofing, dampproofing, or plastering.

    b. Class A: Maximum abrupt or gradual irregularity limited to 1/8 in (3 mm).

        1) Concrete surfaces exposed to public view unless noted or scheduled to receive a higher level of finish.
        2) Concrete surfaces to receive coating or covering material applied directly to concrete, such as textured acrylic coating, concrete surfacing compound or other similar systems.

C. Smooth-Rubbed Finish: Architectural Exposed Concrete (AEC).

1. Procedure: Apply Class A smooth-formed finish as initial step. Not later than one day after formwork is removed, moisten concrete surfaces and rub with carborundum brick or another abrasive until producing uniform color and texture. Do not apply cement grout other than that created by the rubbing process.
2. Locations: Where indicated on drawings.

D. Grout-Cleaned Finish:

1. Procedure: Perform after applying smooth-formed finish treatment. Wet concrete surfaces and apply grout of a consistency of thick paint to coat surfaces and fill small holes. Mix one part Portland cement to one and one-half parts fine sand with a 1:1 mixture of bonding admixture and water. Add white Portland cement in amounts determined by trial patches so color of dry grout will match adjacent surfaces. Scrub grout into voids and remove excess grout. When grout whitens, rub surface with clean burlap and keep surface damp by fog spray for at least 36 hours.
2. Locations: Where indicted on drawings.

E. Related Unformed Surfaces: At tops of walls, horizontal offsets, and similar unformed surfaces adjacent to formed surfaces, strike-off smooth and finish with texture matching adjacent formed surfaces. Continue final surface treatment of formed surfaces uniformly across adjacent unformed surfaces unless otherwise indicated.

3.5 FINISHING FLOORS AND SLABS (UNFORMED SURFACES)

A. General: Prior to proceeding with any finishing operation, complete initial placement procedures consisting of deposit in form(s), consolidation, screeding, leveling, bull-floating, and initial re-straightening. Do not commence finishing operation when excess moisture or bleed water remains on surface. Do not wet concrete surfaces during finishing operations.

B. Screeding Concrete:

1. Act of striking off surface of concrete to pre-determined grade conforming to elevations shown on Drawings shall be accomplished with use of rigid screed guides. Use of wet screed guides is to be avoided on elevated surfaces.
2. At elevated placements, metal deck and other formwork continues to deflect for short period after strike off. Subsequent re-straightening of surface often moves concrete paste from over beams into resulting depressions. It is suggested that Contractor plan for initial slab thickness of design depth plus 1/8 in (3mm) (minimum). Intent shall be to satisfactorily plan for sufficient material to re-straighten slab surface and still maintain specified slab thickness and adequate cover over reinforcing steel.
3. Contractor shall include in his bid any additional concrete required to achieve specified slab surface finish tolerance. Finish floor tolerances shall be as specified elsewhere in this Section.
4. Cast-in-Place Concrete Framing System(s):

    a. Grade for strike off shall be set at predetermined distance above top surface of formwork.
    b. Minimum slab thickness, as specified on Drawings, shall be maintained throughout slab surface.
    c. It is anticipated that occasional Local Areas may be identified where actual deflection of formwork during concreting operations differs from that anticipated by Contractor. At such isolated areas, modify procedures by one or combination of following:

        1) Modify formwork camber where possible.
        2) Where over deflection of formwork occurs, maintain concrete slab design thickness at each end of affected beams and increase slab thickness at mid-span by amount of over deflection experienced.

5. Concrete on Metal Deck over Steel Framing System:

a. Grade for strike off shall be set at predetermined distance above top surface of steel floor members.
b. It is anticipated that occasional areas will be identified where actual deflection of steel beams during concreting operations differs from that anticipated by Engineer. At such locations, modify procedures by one or combination of following:

1) Residual Camber after concrete placement: Modify fabricated camber in shop where possible for subsequent member placements having same conditions. Where this is not possible, maintain initial thickness at mid-span and increase slab thickness at each end of beam by 1/2 of amount of residual camber. In case of beam with 1/2 in (12 mm) of residual camber, slab thickness at ends of this beam only might be increased by 1/4 in (6 mm).
2) Over-Deflection of Beam during concrete placement: Modify fabricated camber where possible for subsequent member placements having same conditions. Where this is not possible, two options are suggested:

a) Option 1: Attach loose shore to underside of this beam only at midspan. Leave initial gap below shore equal to beam camber. As beam deflects during concrete placement, shore will halt deflection at desired point.
b) Option 2: Maintain initial concrete slab thickness at each end of this beam only, and increase slab thickness at mid-span by amount of over deflection experienced.

c. Provide bench mark on each column for use by finishers as guide when they are completing finishing in these areas. It is suggested that mark be placed at predetermined distance above design grade for use by finishers in the removal of excess material as needed.

C. Scratch Finish:

1. Procedure: After placing concrete, finish surface to tolerances of specified overall value of F(F) 15 (floor flatness) and F(L) 13 (floor levelness) when measured according to ASTM E 1155, with minimum local value of F(F) 13 and F(L) 10.

a. Slope surfaces uniformly to drains where required.
b. While still plastic, texture concrete surface that has been screeded and bull-floated or darbied with stiff brushes, brooms, or rakes to produce surface profile amplitude of 1/4 in (6 mm) in one direction.
c. Re-straightening of surface with modified highway straightedge may follow screeding or bull-floating as necessary to maintain flatness/levelness.
d. No troweling permitted.

2. Locations to receive Scratch Finish:

a. Surfaces to receive bonded concrete floor topping and other bonded cementitious finish flooring material excluding thin-set tile.
b. Drive ramps.

D. Float Finish:

1. Procedures:

a. After concrete has been placed, consolidated, screeded, and restraightened, concrete shall not be worked further until ready for floating. Begin floating operations when water sheen has disappeared, and/or when mix has stiffened sufficiently to permit proper operation of float.
b. Floating with power machine equipped with normal trowel blades is not permitted.
c. Floating with power machine equipped with water attachment for wetting concrete surface during finishing is not permitted.
d. Consolidate surface with power-driven machine initially equipped with float-shoe blades. Hand float with wood or cork faced floats in locations inaccessible to power-driven machine. Restraighten surface with ten-foot highway straightedge applied at not less than two different angles approximately perpendicular.
e. Finish surfaces to following tolerances when measured according to ASTM E 1155.

1) Specified Overall Values: F(F) 18 ; F(L) 15
2) Minimum Local Values: F(F) 15 ; F(L) 10

f. Cut down high spots and fill low spots during this procedure to produce planes checking true under straightedge in any direction. Uniformly slope surfaces to drains.
g. Follow restraightening operation by final float pass with power machine equipped with "pizza type" metal pan clipped to float blades to uniform, smooth, granular texture.
h. Pre-plan floating operations sufficiently in advance to avoid over-finishing and incorporating additional water into surface.

2. Locations to receive Float Finish:

a. Surfaces to receive trowel finish.
b. Surfaces to be covered with fluid applied or sheet waterproofing.
c. Surfaces to be covered with built-up or membrane roofing.
d. Surfaces to receive mortar setting bed for tile flooring.
e. Surfaces to receive sand-bed terrazzo.
f. Surfaces composed of air-entrained concrete.

E. Trowel Finish:

1. Procedures: Perform after applying float finish. Intent is to perform minimum troweling effort necessary to achieve satisfactory surfaces. Avoid over-troweling of surfaces and working of water into surfaces. Where bleedwater is present prior to troweling, excess water shall be dragged off or removed by absorption with porous material such as burlap. Incorporate steps to prevent "blistering". If blistering occurs during finishing or otherwise becomes evident after placement, re-evaluate and correct finishing operations immediately.

a. Perform first trowel finish operation with power-driven trowel, fitted with blades as flat to surface as possible and driven at slow speed, to produce smooth surface which is relatively free of defects but may still contain some trowel marks.
b. Additional trowelings with power-driven trowel or by hand troweling may be necessary, with waiting period between each successive troweling effort.
c. Perform final troweling with hand trowels after surface has hardened sufficiently to permit final consolidation of surface, free of trowel marks, and uniform in texture and appearance.
d. Avoid degree of troweling effort(s) resulting in surfaces which exhibit a sheen or glossy appearance.

e. Avoid trowel patterns at surfaces exposed to view. Resulting trowel patterns at exposed surfaces are subject to Architect's approval.
f. Finish surfaces to following F(F) and F(L) tolerances when measured according to ASTM E 1155:

1) Floor levelness does not apply to slabs placed on unsupported form surfaces, such as slabs over unshored metal deck, and to inclined slabs.
2) Slabs-on-Grade:

a) Specified Overall Value: F(F)-25/F(L)-20
b) Minimum Local Value: F(F)-17/F(L)-14
c) Specified Overall Value: F(F)-35/F(L)-25
d) Minimum Local Value: F(F)-25/F(L)-17

3) Elevated Cast-in-Place Concrete Framing System:

a) Specified Overall Value: F(F)-25/F(L)-20
b) Minimum Local Value: F(F)-17/F(L)-14
c) Specified Overall Value: F(F)-30/F(L)-20
d) Minimum Local Value: F(F)-25/F(L)-17

4) Elevated Concrete on Metal Deck and Steel Beam Framing System:

a) Specified Overall Value: F(F)-25
b) Minimum Local Value: F(F)-17
c) Specified Overall Value: F(F)-30
d) Minimum Local Value: F(F)-25

g. Repair defects of sufficient magnitude to telegraph through floor covering by grinding or by application of topping. Refer to Remedy for Out-of-Tolerance Floor Surfaces article below for additional remedial measures.

2. Locations to receive Trowel Finish:

a. Monolithic slab surfaces exposed to view in finished Work, unless noted otherwise.
b. Slab surfaces to be covered with resilient flooring, carpet, paint, or other thin film-finish coating system.

F. Partial Trowel and Fine-Broom Finish:

1. Procedures: Apply a "partial trowel" finish. Start partial trowel finish with first trowel operation as described above. Perform second troweling with power trowel or by hand trowel, but only if considered necessary to remove trowel marks from initial trowel which may show through fine-broom finish, or, to achieve proper uniform surface texture ready to receive fine-brooming. Immediately after second troweling, and when concrete is still plastic, slightly scarify surface with a fine broom.
2. Locations for Partial Trowel and Fine-Broom Finish:

a. Surfaces to receive tile flooring installed with thin-set mortar or other adhesive.
b. Surfaces to receive traffic bearing membrane/coating.

3. Confirmation: Consult with floor finish supplier and installer to confirm suitability of partial trowel and fine-broom finish specified. Where supplier or installer anticipates or otherwise recommends other surface preparation techniques for product application, (such as sand, bead, or shot blasting), waiver for partial trowel and fine-broom finish requirement may be considered by Architect. Submit written description of proposed surface finishing technique for Architect's review prior to Work. Written description shall include statements from supplier and installer.

G. Broom Finish:

1. Procedures: Immediately after float finishing, slightly roughen concrete surface by brooming with fiber-bristle broom perpendicular to main traffic route. Coordinate required final finish with Architect before application.
2. Locations for Broom Finish:

    a. Exterior concrete platforms and steps.
    b. Parking garage floors and ramps.
    c. Where indicated on drawings.

3.6 FLOOR AND SLAB TREATMENTS

A. Aggregate Finish:

1. Procedures: Before final floating, apply slip-resistive aggregate finish where indicated. Apply according to manufacturer's written instructions and as follows:
2. Uniformly spread 25 lb/100 sq. ft. (12 kg/10 sq. m) of slip-resistive aggregate over surface in 1 or 2 applications. Tamp aggregate flush with surface, but do not force below surface.
3. After broadcasting and tamping, apply float finish.
4. After curing, lightly work surface with a steel wire brush or an abrasive stone and water to expose slip-resistive aggregate.
5. Locations:

    a. Where indicated on drawings.

B. Dry Shake Floor Hardener Finish:

1. Procedures:

    a. Uniformly apply dry shake materials at rate of 100 lb per 100 sq. ft., unless greater amount is recommended by material manufacturer's trained technical representative.
    b. Cast trial slab, not less than 100 sq. ft. in area and approximately square, to determine actual application rate, color, and finish, as acceptable to Architect. Use same concrete mix, finishing, and curing planned for project areas to receive dry shake floor finish.
    c. Immediately following first floating operation, uniformly distribute by hand or with mechanical spreader approximately two-thirds of dry shake material over concrete surface, and embed by power floating.
    d. Follow floating operation with second shake application, uniformly distributing remainder of dry shake material with overlapping applications to ensure uniform color, and embed by power floating.

e. After broadcasting and floating, apply trowel finish as specified. Cure slab surface with procedure compatible with dry-shake hardener and as recommended by material manufacturer's trained technical representative. Apply curing compound immediately after final finishing.

2. Locations:

a. Truck dock slab surface.
b. Where indicated on drawings.

C. Penetrating Liquid Floor Hardener and Sealer: Prepare, apply, and finish penetrating liquid floor treatment according to manufacturer's written instructions including preparation, application, precautions, limitations, and compatibility with other surface conditions.

1. Remove curing compounds, sealers, oil, dirt, laitance, and other contaminants and complete surface repairs.
2. Do not apply to concrete that is less than seven days old unless recommended by manufacturer in written literature describing application procedure, but only with prior approval of Architect.
3. Apply liquid until surface is saturated, scrubbing into surface until a gel forms; rewet; and repeat brooming or scrubbing. Rinse with water; remove excess material until surface is dry. Apply a second coat in a similar manner if surface is rough or porous.
4. Locations:

a. Exposed concrete floors in central energy plants.
b. Mechanical rooms not receiving traffic coatings, electrical rooms, housekeeping, storage, and other similar service areas.
c. Where indicated on room finish schedule or on drawings, including exposed concrete floors noted or scheduled as having "sealed concrete" or similar wording.

D. Polished Concrete Floors: Refer to Division 03 Section "Polished Concrete".

E. Chemical Stain: Provide chemical colored stain finish to concrete surfaces indicated according to manufacturer's written instructions and as follows:

1. Concrete shall be at least one month old, dry, free from dark alkali spots, and clean from plaster, paint, grease, oil, soap, and other foreign matter which would prevent necessary penetration and subsequent reaction of stain solution with concrete surface to be colored.
2. Remove paint stains from concrete with medium grit sandpaper or steel wire brush. Remove oil, wax, and grease by using solution of one pound of tri-sodium-phosphate dissolved in one gallon of water and rinsing well. Remove paint spots with scraper and paint remover that does not have wax or acid base.
3. Apply stain with full brush, being careful to avoid excessive puddling. Brush lightly in circular or figure-eight motion until fizzing action ceases. Do not spread stain solution on new areas after fizzing stops. Rather, remaining liquid shall be brushed back over area just treated. When applying additional stain, it shall be brushed back into wet areas previously stained to avoid lap marks. Edges must be kept wet.
4. After first coat has dried, or if at least eight hours have elapsed since application, second coat shall be applied in same manner as first coat. After last coat of stain has dried, residue and salts shall be removed by wet scrubbing with stiff brush and flushing with clean water until rinse water runs clear. Control runoff of flushing water to prevent damage to surrounding area.
5. Locations:

a. Where indicated on drawings.

F. Imprinting for Stamped Concrete: One of the following as directed by Architect:

1. Mat Stamping: While initially finished concrete is plastic, accurately align and place stamp mats in sequence. Uniformly load mats and press into concrete to produce required imprint pattern and depth of imprint on concrete surface. Remove stamp mats immediately. Hand stamp edges and surfaces unable to be imprinted by stamp mats.

   a. Remove unembedded release agent no fewer than three days after stamping concrete. High pressure wash surface and joint patterns, taking care not to damage stamped concrete. Control, collect, and legally dispose of runoff.

2. Tool Stamping: While initially finished concrete is plastic, cover surface with polyethylene film, stretch taut to remove wrinkles, lap sides and ends 3 in (75 mm), and secure to edge forms. Lightly broom surface to remove air bubbles. Accurately align and place stamp tools in sequence and tamp into concrete to produce required imprint pattern and depth of imprint on concrete surface. Remove stamp tools immediately. Hand stamp edges and surfaces unable to be imprinted by stamp tools. Unroll and remove polyethylene film immediately after tool stamping.

   a. Antiquing Agent: Apply over liquid release agent according to manufacturer's written instructions.

3. Roller Stamping: While initially finished concrete is plastic, cover surface with polyethylene film, stretch taut to remove wrinkles, lap sides and ends 3 in (75 mm), and secure to edge forms. Lightly broom surface to remove air bubbles. Accurately align roller and repeat rolling operation to produce required imprint pattern and depth of imprint on concrete surface. Hand stamp surfaces inaccessible to roller. Unroll and remove polyethylene film immediately after roller stamping.

   a. Antiquing Agent: Apply over liquid release agent according to manufacturer's written instructions.

4. Locations:

   a. Where indicated on drawings.

3.7 CONCRETE PROTECTION AND CURING

A. General: Protect freshly placed concrete for minimum period indicated below from premature drying and excessive cold or hot temperatures.

Cement Type	Minimum Curing Period
Type I Portland Cement	7 days
Type II Portland Cement	10 days
Type III Portland Cement	3 days (when ambient temp. is 73 deg F or higher)
Type IV or V Portland Cement	14 days
Blended Cements	Variable, but, not less than period above for Type of Portland Cement in blended mix.

B. Curing Time Reduction: Curing times may be reduced from periods noted above at concrete which will have permanent in-service interior exposure to conditioned air if either of following provisions is complied with.

1. When tests are made of field cured cylinders cured by same methods as structure, curing period may be terminated when average compressive strength has attained 75% of specified 28-day compressive strength. Minimum curing period not less than 72 hours.
2. When temperature of structure concrete is maintained at minimum of 50 deg F (10 deg C) for same length of time required for laboratory cured cylinders of same concrete to reach 85% of specified 28-day compressive strength, curing period may be terminated. Minimum curing period not less than 72 hours.

C. Evaporation Retarder: Apply evaporation retarder to unformed concrete surfaces if hot, dry, or windy conditions result in rate of evaporation (estimated by ACI 305R, Fig. 2.1.5) approaching 0.2 lb/sq. ft. x h (1 kg/sq/ m x h) before and during finishing operations. Apply according to manufacturer's written instructions after placing, screeding, and bull floating or darbying concrete, but before float finishing.

D. Formed Surfaces: Cure formed concrete surfaces, including underside of beams, supported slabs, columns, walls, and other similar surfaces. If forms remain during curing period, moisture cure after loosening forms. If forms are removed before end of curing period, continue curing by one or a combination of specified curing methods as applicable. Contractor shall select method which is compatible with requirements for subsequent material application on surface.

E. Unformed Surfaces: Begin curing immediately after finishing concrete. Cure unformed surfaces, including floors and slabs, concrete floor toppings, and other surfaces, by one or a combination of specified curing methods as applicable. Contractor shall select method which is compatible with requirements for subsequent material application on surface.

F. Curing Methods: Cure formed and unformed surfaces by one or a combination of following methods as applicable.

1. Moisture Curing:

a. Procedures: Keep concrete surface continuously wet by covering with absorptive cover or by using continuous water-fog spray. Cover concrete surface with specified absorptive cover, thoroughly saturate cover with water, and keep continuously wet. Place absorptive cover to provide coverage of concrete surfaces and edges, with 12 in (300 mm) lap over adjacent absorptive covers. Secure absorptive covers to maintain close contact with concrete surface, withstand wind, and prevent air circulation below cover during entire curing period.
b. Precautions: Apply following precautions during moisture curing.

1) Water shall be potable meeting requirements of ASTM C 94.
2) Temperature of supply curing water shall not exceed 10 deg F (-9.4 deg C) warmer than internal temperature of concrete or 90 deg F (32 deg C), whichever is lower.
3) Temperature of supply curing water shall not be lower than 15 deg F (-12.2 deg C) cooler than internal temperature of concrete or 50 deg F (10 deg C), whichever is higher.
4) Discontinue moisture curing 24 hours minimum prior to exposure or anticipated exposure of concrete to freezing ambient temperatures.

c. Moisture cure concrete surfaces that are to receive the following finishes:

1) Penetrating liquid floor hardener and sealer.
2) Polished concrete.
3) Chemical stain.

2. Moisture-Retaining Cover:

a. Procedures: Cover concrete surfaces with moisture-retaining cover for curing concrete, placed in widest practicable width with sides and ends lapped at least: 4 in (100 mm) for curing paper; and 12 in (300 mm) for polyethylene film or burlap-polyethylene sheeting, and sealed by waterproof tape or adhesive. Immediately repair holes or tears during curing period using cover material and waterproof tape. Secure moisture-retaining cover to maintain close contact with concrete surface, withstand wind, and prevent air circulation below cover during entire curing period.
b. Polyethylene film not permitted at unformed surfaces.

3. Curing Compounds:

a. Procedures: Apply curing compound to concrete surfaces as soon as final finishing operations are complete (within 2 hours and after surface water sheen has disappeared). Apply uniformly in continuous operation by power spray or roller according to manufacturer's directions. Recoat areas subjected to heavy rainfall within 3 hours after initial application. Maintain continuity of coating and repair damage during curing period.
b. Unformed Surfaces at Parking Garages: Apply liquid membrane-forming curing compound.
c. Do not use curing compounds which exhibit yellowing or moderate yellowing at surfaces to be permanently exposed in finished Work.
d. Removal: If curing compounds are used on surfaces (exterior or interior, formed or unformed) that are scheduled or specified to receive surface-adhered treatment (including but not limited to cementitious toppings/overlays, adhesive applied carpet, resilient flooring, terrazzo, thin-set ceramic tile/stone, wood, coatings, paint, waterproofing, membranes, athletic flooring, epoxy overlay/adhesive, hardeners, sealers, water repellents, or other covering system adhered with water-based adhesive), then the following requirements apply:

1) Remove curing compound no later than 7 days after end of curing period by mechanical bead blast process acceptable to Architect.
2) Allow sufficient additional time after curing compound removal to achieve proper concrete moisture and/or water vapor limitation for successful application of subsequent surface treatment as specified in appropriate surface treatment specification Section.

e. Do not use curing compounds at concrete surfaces that are to receive the following finishes:

1) Penetrating liquid floor hardener and sealer.
2) Polished concrete.
3) Chemical stain.

f. Incorrect Use: If curing compound is incorrectly used on concrete surfaces specified to receive other curing method(s), then mechanically or chemically remove curing compound in its entirety not later than 7 days after end of curing period by pre-approved method(s). Acid etching is not permitted. Method of curing and sealing compound removal shall not result in damaged or otherwise unsuitable surface to receive specified finish material, coating, membrane, or covering and shall be at Contractor's expense. Consult with appropriate surface finish vendor and installer for suitability of curing compound removal method prior to the Work.

g. Surfaces with Dry-Shake Hardener: Consult with manufacturer's trained technical representative for product and application of curing compound over surfaces where dry-shake hardener has been applied.

G. Control of Water after Curing: Control water at all times after curing period. Rewetting after curing period affects drying of hardened concrete with direct affect on application of finish materials applied with adhesives sensitive to moisture and/or water vapor. Control of water includes water at jobsite, and moisture due to rain, ice, or snow. Contractor is responsible for control of water and affects on concrete and material(s) to be applied to hardened concrete.

3.8 FLOOR SURFACE TOLERANCES

A. Specified Overall Value(s) and Minimum Local Value(s) herein represent minimum floor flatness/levelness criteria for project.

1. Where normal data collection under provisions of ASTM E 1155 indicate possibility of work below these values, additional data collection may be required to confirm extent, or boundary, of defective work at Contractor's expense.
2. When areas are identified as not meeting specified Minimum Local Value(s), such areas are deemed as out-of-tolerance floor surfaces and shall be replaced or repaired in accordance with "Remedy for Out-of-Tolerance Floor Surfaces" below.

B. Floor Elevation Tolerances:

1. Permissible Vertical Envelope: When tested in accordance with requirements of ASTM E 1155, following percentages of elevation samples on floor slabs at single elevation shall fall within level 3/4 in (19 mm) envelope centered about mean elevation of readings.

   a. Slabs-on-Grade: 85 percent.
   b. Elevated Slabs: 80 percent.

2. Permissible Arithmetic Mean Deviation of Floor Samples: Arithmetic mean of these elevation samples shall not deviate from design grade more than following amounts:

   a. Slabs-on-Grade: 1/4 in (6 mm), plus or minus.
   b. Elevated Slabs: 1/2 in (12 mm), plus or minus.

C. Contractor shall take immediate action to correct work that does not meet specified tolerances.

3.9 REMEDY FOR OUT-OF-TOLERANCE FLOOR SURFACES

A. General:

1. Remedial work, testing, retesting, and consulting services necessary to correct out-of-tolerance floor surfaces shall be at Contractor's expense with no extension to construction schedule.
2. Repair and/or replacement procedures, limits, and products shall be in manner that does not diminish desired appearance or serviceability of structure, and acceptable to Architect/Engineer and Owner. Contractor shall submit detailed work plan for areas where remedial measures are necessary, prior to work, and in accordance with Contractor's submittal "Work Plan for Out of Tolerance Floor Surfaces".

B. Remedial Measures:

1. Minimum local areas measuring below specified minimum local value(s) shall be repaired by grinding or by application of topping or underlayment to entire surface of minimum local area, and retested, unless following conditions occur:

    a. Such area is acceptable to Architect/Engineer and Owner, and written acceptance is provided.
    b. Repair of such area would diminish desired appearance and/or serviceability of structure, or is in general considered unacceptable to Architect/Engineer and Owner for other reasons, in which case minimum local area(s) shall be replaced and retested.

2. Application of topping or underlayment:

    a. Prime floor surface as recommended by topping or underlayment manufacturer.
    b. Add aggregate for thicker areas as recommended by topping or underlayment manufacturer.
    c. Install in accordance with manufacturer's directions.
    d. For interior areas which are to have finish flooring, use self-leveling concrete underlayment.
    e. For areas which will be exposed as wearing surface, use self-leveling concrete topping.

3.10 CONCRETE SURFACE REPAIRS

A. General:

1. Locate surface defects where repair is required by visual inspection of formed and unformed surfaces. Mark location in manner that does not cause further defect. Record and maintain record of such defects for Repair Records Submittal.
2. Remove and replace concrete with surface defects if defects cannot be repaired to satisfaction of Architect/Engineer or Owner.
3. Concrete removal shall be with equipment and procedures which will prevent cracking, micro-cracking, and bruising of sound concrete to remain. Follow initial concrete removal process with sandblasting to remove any remaining deleterious effects.
4. Repairs shall be performed by trained installer, experienced with type repair and repair products required.
5. Avoid cutting reinforcement during repairs, but, where reinforcement is encountered, remove concrete so as to expose reinforcement within repair area for 1 in (25 mm) minimum on all sides.
6. Protect freshly applied repair mortars from exposure to direct sunlight, wind, rain, and frost.

7. Repair procedures outlined below are general in nature and not intended as complete repair preparation or installation instructions. Intent is to provide minimum basic repair criteria allowing for flexibility of means/methods based on experience of trained installers.

B. Surface Defects: Repair and patch surface defects which become evident during construction and warranty periods, when such conditions are exposed to view, or when durability, serviceability, and/or structural integrity of structure is affected by defect. Surface defects requiring attention include, but are not limited to, following.

1. Honeycombs, rock pockets, and voids over 1/4 in (6 mm) in any dimension.
2. Holes left by tie rods, bolts, or other.
3. Exposed reinforcing.
4. Cracks 0.02 in (0.50 mm) wide or wider at interior exposed or non-exposed conditions.
5. Cracks in excess of 0.01 in (0.25 mm) wide at exterior exposed conditions and/or where water tightness is critical as determined by Architect/Engineer.
6. Cracks which penetrate completely through member, regardless of width.
7. Spalls which affect durability, structural integrity, or finish appearance at surfaces exposed to view.
8. Surface crazing which affects durability, structural integrity, or finish appearance at surfaces exposed to view.
9. Stains, discolorations, and texture irregularities at surfaces exposed to view which cannot be corrected by cleaning or rubbing processes.
10. High or low irregularities in unformed surfaces other than as specified for Out-of-Tolerance Floor Surfaces.

C. Repairing Formed Surfaces:

1. After form removal, cut out honeycombs, rock pockets, and voids more than 1/2 in (12 mm) in any dimension in solid concrete.

    a. Mark perimeter of area to be removed with straight-line segments forming rectangular or square repair area on formed surface. Intent is for repair area edges to be linear and repair area shape to be parallelogram.
    b. Saw cut perimeter of repair area to pre-determined repair depth, but not less than 1/2 in (12 mm). Make edges of cuts perpendicular to concrete surface.
    c. Remove concrete within repair area by appropriate method to obtain exposed aggregate surface with minimum surface profile of 1/8 in (3 mm).
    d. Clean substrate of dust, dirt, loose concrete, or other bond inhibiting material.
    e. Dampen prepared substrate with water to saturated surface dry condition, and brush-coat surface with bonding agent. Pre-dampening may be omitted if not required by repair mortar manufacturer.
    f. Fill and compact with repair mortar before bonding agent has available exceeded pot life.
    g. Finish repair surface to match plane and texture of adjacent concrete.
    h. Cure repair surface by moisture retaining cover for minimum period of 72 hours, but not less than period recommended by repair mortar manufacturer.

2. Fill form-tie voids with patching mortar or cone plugs secured in place with bonding agent.
3. Repair defects on surfaces exposed to view with patching mortar consisting of blend of white Portland cement and standard Portland cement so that, when dry, patching mortar will match surrounding color.

a. Patch a test area at inconspicuous locations to verify mixture and color match before proceeding with patching.
b. Prepare substrate to receive patching mortar same as described above, except, repair depth not less than 1 in (25 mm).
c. Compact mortar in place and strike off slightly higher than surrounding surface.
d. Cure repair surface with moisture retaining cover for 7 days minimum.

4. Repair cracks exceeding limitations noted above by high or low pressure epoxy injection procedure acceptable to Architect/Engineer. Gravity flow techniques for epoxy resin repair of cracks not permitted.

D. Repairing Unformed Surfaces: Test unformed surfaces, such as floors and slabs, for finish and verify surface tolerances specified for each surface. Correct low and high areas. Test surfaces sloped to drain for trueness of slope and smoothness; use a sloped template.

1. After concrete has cured at least 14 days, correct high areas by removal with mechanical equipment and procedures which will not cause cracking, micro-cracking, or bruising of sound concrete.
2. Correct localized non-exposed low areas by cutting out low areas to minimum depth of 1/2 in (12 mm) and 1/8 in (3 mm) surface profile. Apply bonding agent and replace with repair mortar. Finish repaired areas to blend into adjacent concrete.
3. Correct low interior areas scheduled to receive floor coverings with self-leveling concrete underlayment. Prepare, mix, and apply repair underlayment and primer according to manufacturer's written instructions to produce a smooth, uniform, plane, and level surface. Feather edges to match adjacent floor elevations.
4. Correct low interior areas scheduled to remain exposed with self-leveling concrete topping. Cut out low areas to ensure a minimum repair topping depth of 1/2 in (12 mm) to match adjacent floor elevations. Prepare, mix, and apply repair topping and primer according to manufacturer's written instructions to produce a smooth, uniform, plane, and level surface.
5. Correct low exterior areas to remain exposed with overlay or repair mortar suitable for application. Cut out defective areas to ensure minimum repair mortar depth of 1/2 in (12 mm) and 1/8 in (3 mm) surface profile. Prepare, mix, apply, and cure repair mortar and primer according to manufacturer's written instructions
6. Repair defective areas which cannot be satisfactorily repaired, by cutting out defective area in its entirety and replacing with fresh concrete. Remove defective areas with clean, square cuts. Preserve and expose steel reinforcement with at least 1 in (25 mm) clearance all around. Dampen concrete surfaces in contact with fresh concrete and apply bonding agent. Mix fresh concrete of same materials and mix as original concrete unless smaller coarse aggregate necessary for application. Place, compact, and finish to blend with adjacent finished concrete. Cure in same manner as adjacent concrete.
7. Repair single holes 1 in (25 mm) or less in diameter with patching mortar. Cut out holes to sound concrete and clean off dust, dirt, and loose particles. Dampen cleaned concrete surfaces and apply bonding agent. Place patching mortar before bonding agent has dried. Compact patching mortar and finish to match adjacent concrete. Keep patched area continuously moist for at least 72 hours.
8. Repair cracks exceeding limitations noted above by high or low pressure epoxy injection procedure acceptable to Architect/Engineer. Gravity flow techniques for epoxy resin repair of cracks not permitted.

E. Structural Repairs:

1. Definition: Defects described above at structural load-bearing members where structural integrity of structure is jeopardized or of concern to Engineer.

2. Procedures:

    a. Defects requiring structural repair shall be determined by Engineer.
    b. Perform structural repairs with prior approval of Engineer for method and procedure using specified bonding compound and/or repair materials.

F. Repair methods not specified above may be considered, subject to approval of Architect/Engineer prior to work.

3.11 JOINT FILLING

A. Prepare, clean, and install joint filler according to manufacturer's written instructions.

B. Remove dirt, debris, saw cuttings, curing compounds, and sealers from joints; leave contact faces of joint clean and dry.

C. Install semi-rigid epoxy joint filler full depth in saw-cut joints and in tooled joints. Overfill joint and trim joint filler flush with top of joint after hardening.

PART 4 - QUALITY CONTROL

4.1 INSPECTION STANDARDS

A. Quality control, testing, and inspections shall meet the special inspection requirements of the building code and any local or state provisions.

4.2 TESTING AGENCY

A. Owner will employ and pay a qualified independent testing agency to perform the quality control indicated in this section, including special inspections required by the building code.

B. Floor Flatness Inspector to perform floor surface profile measurements shall be certified by manufacturer of floor profile measurement apparatus.

C. Flatness and Levelness Inspection and Reporting for Floor Slabs:

1. Determine flatness and levelness of interior floor slabs designated to receive troweled finish. Data shall be collected in manner consistent with requirements of ASTM E 1155 and using Type II Apparatus.
2. Coordinate with Contractor to establish measurement program and desired lines for data collection, in accordance with requirements of ASTM E 1155.
3. Mark clearly on floor surface beginning point and ending point of each line of data collection.
4. Those lines of data which will be used to study time-dependent behavior of floor will be collected along chalk line which has been established by Inspector. Each chalk line is to be protected in manner which will allow subsequent data to be collected at same locations.
5. Measurements shall be made within 24 hours after completion of concrete finishing operations.
6. Immediately following data collection, Inspector will process data. Contractor will provide Inspector with actual elevation of "Start" and "End" points for each data line marked by Inspector.

7. Within 48 hours of data collection, Inspector will provide Contractor with written report stating results of floor profile measurements and surface analysis for each slab placement. Report(s) shall include following:

    a. Key plan showing location of data collected.
    b. Results required by ASTM E 1155.
    c. Running tabulation of composite FF and FL values for surfaces installed to date.
    d. Calculated percentage of elevation samples falling within level 3/4 in (19 mm) envelope, centered about mean elevation of samples taken to date at subject floor level(s).
    e. Comments on possible cause of floor surface deviations noted during analysis of data.
    f. Recommendations for adjustments in future construction based on analysis of data.

4.3 CONTRACTOR

A. Owner's employment of a qualified independent testing agency to perform the testing/inspection services shall not operate to relieve Contractor of responsibility to furnish materials and workmanship in accordance with Contract Documents.

B. Owner's employment of a qualified independent testing agency to perform the testing/inspection services is for verification and does not prevent Contractor from providing supplemental testing/inspection at Contractor's discretion and expense.

C. Qualifications of Contractor's Testing/Inspection Personnel: Contractor's personnel performing testing/inspection services are subject to same qualifications as Owner's Testing Agency.

D. Re-testing of conditions failing to meet specified requirements shall be provided at Contractor's expense.

1. In the event of differences between Owner's testing agency and Contractor's inspector regarding conformance, such differences shall be brought to the attention of the Architect, Engineer of Record and enforcement agency as part of the resolution.
2. Where there is no resolution of differences, joint supplemental testing between Owner's testing agency and Contractor's inspector may be required and provided at Contractor's expense.
3. Additional fees for Architect and Engineer of Record participation in resolution of non-conforming work may be required and provided at Contractor's expense.

E. Manufacturer's Field Service: Manufacturer's qualified technical representative shall periodically inspect Work to ensure installation is proceeding in accordance with manufacturer's designs, recommendations, instructions, and warranty requirements. Representative shall submit written reports of each visit indicating observations, findings, and conclusions of inspection.

1. Manufacturer's Technical Representative Qualifications: Direct employee of technical services department of manufacturer with experience in providing recommendations, observations, evaluations, and problem diagnostics.

    a. Concrete underlayments, self-leveling concrete toppings, and overlay/repair mortars
    b. Crack repair/injection.

END OF SECTION

SECTION 03 4500

ARCHITECTURAL PRECAST CONCRETE

PART 1 - GENERAL

1.1 SUMMARY

A. Section Includes: Plant precast reinforced architectural concrete units and supplementary items necessary for installation.

1. Architectural precast concrete cladding units.

~~1.2 DELEGATED ENGINEERING REQUIREMENTS~~

~~A. Contract Documents Design Intent: Drawings and Specifications indicate design intent for products and systems and do not necessarily indicate or specify total Work required. Contract Documents shall not be construed as an engineered design; furnish and install all Work required for a complete installation.~~

~~B. Delegated Engineering Responsibility: Contractor shall employ a qualified professional engineer to provide engineering for products and systems including attachment to building structure required to meet design intent of Contract Documents.~~

~~1. Preparation of structural analysis data including engineering calculations, shop drawings and other submittals signed and sealed by the qualified professional engineer.~~

~~C. Delegated Engineering Professional Qualifications: Professional engineer legally authorized to practice in jurisdiction where Project is located and experienced in providing engineering services of kind indicated for products and systems similar to this Project and has a record of successful in-service performance.~~

~~D. Coordination of Work:~~

~~1. Product Variations: In the event of minor differences between products and systems of acceptable or available manufacturers, Contractor shall notify Architect of such differences and resolve conflicts in a timely manner. Failure of Contractor to provide notification shall be construed as acceptance of conditions indicated, and changes caused by minor differences between products and Contract Documents shall be included in the Work at no additional cost to Owner.~~

~~2. Allowable Adjustments: Minor dimension and profile adjustments may be made in interest of fabrication or erection methods or techniques or ability to satisfy design intent, provided design intent is maintained as determined by Architect. Proposed deviations shall include a detailed analysis of impact to adjacent substrates or other building systems, including related design or construction cost impacts. If accepted by Architect, deviations causing changes in materials, constructability, substrates, or conditions shall be included in the Work at no additional cost to Owner.~~

1.3 ACTION SUBMITTALS

A. Product Data: Manufacturer/fabricator's technical literature for each product and system indicated.

1. Include manufacturer/fabricator's specifications for materials, finishes, construction details, installation instructions, and recommendations for maintenance.

B. Design Mixtures: Manufacturer/fabricator's detailed ingredients list for each concrete mixture. Include compressive strength and water-absorption tests.

C. Shop Drawings: Show details of fabrication and installation, including plans, elevations, sections, details of components and attachments to other work. Distinguish between shop and field-assembled work. Indicate details at building corners.

1. Indicate separate face and backup mixture locations and thicknesses.
2. Indicate welded connections by AWS standard symbols. Detail loose and cast-in hardware and connections.
3. Indicate locations, tolerances, and details of anchorage devices to be embedded in or attached to structure or other construction.
4. Indicate locations, extent, and treatment of dry joints if two-stage casting is proposed.
5. Indicate relationship of units to adjacent materials.
6. Indicate joints, reveals, and extent and location of each surface finish.
7. Thin Masonry Facing Units: Indicate locations and details of thin masonry facing units, including corner units, special shapes, and joint treatments.
8. Stone Facing Units: Indicate locations and details of stone facing units, anchors, and joint treatments.
9. Design Modifications: If design modifications are proposed to meet performance requirements and field conditions, submit design calculations and Shop Drawings. Do not adversely affect the appearance, durability, or strength of units when modifying details or materials and maintain the general design concept.

D. Concrete-Faced Unit Samples for Verification Purposes: Exposed surfaces of concrete-faced units for each type of finish indicated, in sets of 3, illustrating full range of finish, color, and texture variations expected; approximately 12 in by 12 in by 2 in (300 mm by 300 mm by 50 mm).

E. Thin Masonry Facing Unit Samples for Verification Purposes: Exposed surfaces of masonry-faced units for each type of finish indicated, in sets of 3, illustrating full range of color and texture variations expected; approximately 12 in by 12 in by 2 in (300 mm by 300 mm by 50 mm).

F. Stone Facing Unit Samples for Verification Purposes: Exposed surfaces of stone-faced units for each type of finish indicated, in sets of 3, illustrating full range of color and texture variations expected; approximately 12 in by 12 in by 2 in (300 mm by 300 mm by 50 mm).

1.4 INFORMATIONAL SUBMITTALS

A. Welding Certifications: Qualification certificates required by "Quality Assurance" Article. Include names of firms and personnel certified.

B. Material Certificates: For the following items, signed by manufacturers:

1. Cementitious materials.
2. Reinforcing materials.
3. Admixtures.
4. Bearing pads.
5. Structural-steel shapes and hollow structural sections.
6. Thin Masonry Facing Units: Brick units and accessories.
7. Stone Facing Units: Stone anchors.

C. Delegated Engineering Calculations: Informational submittal for products indicated to comply with design loads, include structural analysis data signed and sealed by the qualified professional engineer responsible for their preparation; test reports are not acceptable substitute for calculations.

D. Product Test Reports: Written reports based on evaluation of comprehensive tests performed by qualified testing agency indicating that each product complies with requirements.

1. Results that materials, including water, in concrete mix are free of ferrous or other material which will cause surface staining during curing operations or upon exposure to weather.
2. Results that aggregates have a stain index of less than 20 according to ASTM C 641.

E. Source Quality Control Test Reports: Reports from fabricator required by ‘‘Source Quality Control’’ Article.

F. Field Quality Control Reports: Written report of testing and inspection required by ‘‘Field Quality Control’’ Article.

G. Qualification Data:

1. For firms and persons specified in "Quality Assurance" to demonstrate their capabilities and experience. Include list of completed projects.
2. Submit verification that manufacturer/fabricator is a participant in one of the required certification programs as specified.

1.5 QUALITY ASSURANCE

A. Manufacturer Qualifications: Manufacturer with not less than 10 years of experience in the successful production and in-service performance of products and systems similar to scope of this Project.

1. Certification Program Participant: Participates in one of following:

a. PCI's plant certification program and designated a PCI-certified plant for Group A, Category A1 - Architectural Cladding and Load Bearing Units.
b. APA's "Plant Certification Program for Production of Architectural Precast Concrete Products" and designated an APA-certified plant.

B. Installer Qualifications:

1. Experience: Installer's personnel with not less than 5 years of experience in the successful performance of Work similar to scope of this Project.
2. Supervision: Installer shall maintain a competent supervisor at Project while the Work is in progress, and who has not less than 5 years of experience installing products and systems similar to scope of this Project.
3. Manufacturer/Fabricator Acceptance: Installer shall be certified, approved, licensed, or acceptable to manufacturer/fabricator to install products.

C. Testing Agency Qualifications: An independent testing agency, acceptable to authorities having jurisdiction, qualified according to ASTM C 1077 and ASTM E 329 for testing indicated.

D. Design Standards: Comply with ACI 318 (ACI 318M) and design recommendations of PCI MNL 120, "PCI Design Handbook - Precast and Prestressed Concrete," applicable to types of architectural precast concrete units indicated.

E. Quality-Control Standard: For manufacturing procedures and testing requirements, quality-control recommendations, and dimensional tolerances for types of units required, comply with PCI MNL 117, "Manual for Quality Control for Plants and Production of Architectural Precast Concrete Products."

F. Welding: Qualify procedures and personnel according to AWS qualification requirements and following:

1. AWS D1.1/D.1.1M, "Structural Welding Code - Steel".
2. AWS D1.4, "Structural Welding Code - Reinforcing Steel".

G. Pre-Production Sample Units: After sample acceptance and before fabricating architectural precast concrete units, produce sample units for review by Architect. Provide as many sample units as required to verify selections made under sample Submittals and to demonstrate aesthetic effects and qualities of materials and execution. Use materials and installation methods indicated for the completed Work.

1. Produce a minimum of 2 field sample units approximately 16 sq ft (1.5 sq m) in area for review. Incorporate full-scale details of architectural features, finishes, textures, reveals. and transitions in sample units.
2. Locate field sample units at site in locations indicated or, if not indicated, as directed by Architect.
3. Damage part of an exposed-face surface for each finish, color, and texture and demonstrate adequacy of repair techniques proposed for repair of surface blemishes.
4. After acceptance of repair technique, maintain one field sample unit at fabricator's plant and one at site in an undisturbed condition as a standard for judging the completed Work.
5. Demolish and remove field sample units when directed by Architect.

H. Range Sample Units: After pre-production sample unit acceptance and before fabricating units, produce a minimum of 3 sets of range samples, approximately 6 sq ft (1.5 sq m) in area, representing anticipated range of each color and texture on Project's units. After acceptance of range samples, retain one set of range samples at site and send remaining range sample sets to manufacturer/fabricator's plant for color and texture approval reference.

I. Mock-ups: Prior to fabrication and installation, build mock-up for each form of construction and finish required to verify selections made under sample Submittals and to demonstrate aesthetic effects and qualities of materials and execution. Build mock-up using materials indicated for the completed Work.

1. Build mock-up in the location and of the size indicated or, if not indicated, as directed by Architect. Contractor shall provide structural support framework.

    a. Show typical components, attachments to building structure, and requirements of installation.

2. Notify Architect seven days in advance of the dates and times when mock-up will be installed.
3. Obtain Architect's acceptance of mock-ups before starting fabrication or installation.
4. Acceptance of mock-ups does not constitute acceptance of deviations from the Contract Documents contained in mock-ups unless such deviations are specifically noted by Contractor and accepted by Architect in writing.
5. Demolish and remove mock-ups when directed by Architect unless accepted to become part of the completed Work.

1.6 PRE-INSTALLATION CONFERENCE

A. Pre-Installation Conference: Before Work begins, conduct conference at Project site.

1. Participants:

a. Architect.
b. Contractor, including superintendent.
c. Installer, including project manager and supervisor.
d. If requested, Manufacturer's qualified technical representative.
e. Installers of other construction interfaced with Work.

2. Minimum Agenda: Installer shall demonstrate understanding of the Work required by describing detailed procedures for preparing, installing, and cleaning the Work. Demonstration shall include, but not be limited to, following topics:

a. Tour representative areas of Work, inspect and discuss condition of substrate, and other preparatory work performed by other trades.
b. Review Contract Document requirements.
c. Review approved submittals.
d. Review inspection and testing requirements.
e. Review environmental conditions and procedures for coping with unfavorable conditions.
f. Resolve deviations or differences between Contract Documents and the manufacturer's specifications.

3. Record discussions, including decisions and agreements, and prepare report.

1.7 DELIVERY, STORAGE, AND HANDLING

A. Preparation for Shipping: Apply water repellent to units as specified in "Fabrication" Article in this Section before transporting them to the Project.

B. Delivery: Deliver units in such quantities and at such times to limit unloading units temporarily on ground. Support units during shipment on nonstaining shock-absorbing material.

C. Storage: Store units with adequate dunnage and bracing and protect units to prevent contact with soil, to prevent staining, and to prevent cracking, distortion, warping, or other physical damage.

D. Handling: Handle and transport units in a position consistent with their shape and design in order to avoid excessive stresses which would cause cracking or damage. Lift and support units only at designated points shown on Shop Drawings.

1.8 COORDINATION

A. Coordinate installation of products and systems with interfacing and adjoining construction to provide a successful installation without failure.

1.9 SEQUENCING

A. Furnish loose connection hardware and anchorage items to be embedded in or attached to other construction without delaying the Work. Provide locations, setting diagrams, templates, instructions, and directions, as required, for installation.

PART 2 - PRODUCTS

2.1 MANUFACTURERS AND PRODUCTS

A. Available Manufacturers and Products: Subject to compliance with requirements of Contract Documents as judged by the Architect, manufacturers offering products that may be incorporated into the Work include, but are not limited to, those listed.

2.2 MATERIALS, GENERAL

A. Single Source Responsibility: Furnish each type of product from single manufacturer/fabricator. Provide secondary materials only as recommended by manufacturer/fabricator of primary materials.

2.3 PERFORMANCE REQUIREMENTS

A. General Performance: Engineer products and systems to withstand loads within limits of allowable working stresses of the materials involved under conditions indicated and without permanent deformation or failure of materials.

B. Design Loads: Engineer to withstand design loads including but not limited to gravity, wind, seismic, and erection design loads and thermal movements established by authorities having jurisdiction, applicable local building codes and as indicated.

1. Structural Movement: Engineer to withstand movements of structure including, but not limited to, drift, twist, column shortening, long-term creep and deflection from uniformly distributed and concentrated live loads. Contractor shall obtain required design data and identify movements accommodated on submittal drawings.

a. Accommodate plus or minus 3/8 in (10 mm) differential vertical deflection of floors.

C. Thermal Movements: Engineer products and systems to accommodate thermal movements of supporting elements resulting from the following maximum change (range) in ambient and surface temperatures without buckling, damaging stresses, damaging loads on fasteners, failure of operating units to function properly, and other detrimental effects.

1. Temperature Change (Range): 120 deg F (49 deg C), ambient; 180 deg F (82 deg C), material surfaces.

D. Dimensional Tolerances: Engineer products and systems to accommodate dimensional tolerances of framing members and adjacent construction.

~~E. Fire-Resistance Rating: Where indicated, provide architectural precast concrete units whose fire resistance and minimum thicknesses to provide fire rating has been calculated and is acceptable to authorities having jurisdiction.~~

F. Building Maintenance Equipment: Engineer units supporting building maintenance equipment to resist pull-out and horizontal shear forces transmitted from equipment.

~~G. Vehicular Impact Loads: Engineer precast units acting as vehicular barriers for passenger cars to resist a single 6000 lb (26.7 kN) service load and 10,000 lb (44.5 kN) ultimate load applied horizontally in any direction to the unit, with anchorages or attachments capable of transferring this load to the structure. Engineer units assuming the load to act at a height of 18 in (450 mm) above the floor or ramp surface on an area not to exceed 1 sq ft (0.93 sq m).~~

H. ~~Hurricane Requirements: Engineer to withstand effects of cyclic wind pressures and windborne debris.~~

2.4 MOLD MATERIALS

A. Molds: Rigid, dimensionally stable, non-absorptive material, warp and buckle free, that will provide continuous and true precast concrete surfaces within fabrication tolerances indicated; non-reactive with concrete and suitable for producing required finishes.

B. Mold-Release Agent: Commercially produced liquid-release agent that will not bond with, stain or adversely affect concrete surfaces and will not impair subsequent surface or joint treatments of concrete.

C. Form Liners: Units of face design, texture, arrangement, and configuration indicated. Furnish with manufacturer/fabricator's recommended liquid-release agent that will not bond with, stain, or adversely affect concrete surfaces and will not impair subsequent surface or joint treatments of concrete.

2.5 REINFORCING MATERIALS

A. Reinforcing Bars: One of both of the following as required:

1. Reinforcing Bars: ASTM A 615 / A 615M, Grade 60 (Grade 420), deformed.
2. Low-Alloy-Steel Reinforcing Bars: ASTM A 706 / A 706M, deformed.

B. ~~Galvanized Reinforcing Bars: ASTM A 615/A 615M, Grade 60 (Grade 420), or ASTM A 706/ A 706M, deformed bars, ASTM A 767/A 767M, Class II zinc coated, hot-dip galvanized, and chromate wash treated after fabrication and bending.~~

C. Steel Bar Mats: ASTM A 184 / A 184M, fabricated from ASTM A 615 / A 615M, Grade 60 (Grade 420) or ASTM A 706 / A 706M, deformed bars, assembled with clips.

D. Plain-Steel Welded Wire Reinforcement: ASTM A 185, fabricated from as-drawn or galvanized steel wire into flat sheets.

E. Deformed-Steel Welded Wire Reinforcement: ASTM A 497 / A 497M, flat sheet.

F. Supports: Suspend reinforcement from back of mold or use bolsters, chairs, spacers, and other devices for spacing, supporting, and fastening reinforcing bars and welded wire reinforcement in place according to PCI MNL 117.

2.6 CONCRETE MATERIALS

A. Portland Cement: ASTM C 150, Type I or Type III, gray for non-exposed backup concrete, unless otherwise indicated.

1. For surfaces exposed to view in finished structure, mix gray, white, tan, or a combination to produce exposed finish color selected, of same type, brand, and mill source.

B. Supplementary Cementitious Materials: Not to be used in face mixture; allowed in back of unit mixture only

1. Fly Ash: ASTM C 618, Class C or F, with maximum loss on ignition of 3 percent.
2. Silica Fume Admixture: ASTM C 1240, with optional chemical and physical requirement.
3. Metakaolin Admixture: ASTM C 618, Class N.

4. Ground Granulated Blast-Furnace Slag: ASTM C 989, Grade 100 or 120.

C. Normal-Weight Aggregates: Except as modified by PCI MNL 117, ASTM C 33, with coarse aggregates complying with Class 5S. Stockpile fine and coarse aggregates for each type of exposed finish from a single source (pit or quarry) for Project.

1. Face-Mixture-Coarse Aggregates: Selected, hard, and durable; free of material that reacts with cement or causes staining. Uniformly or gap graded to match approved sample.
2. Face-Mixture-Fine Aggregates: Selected, natural or manufactured sand of same material as coarse aggregate, unless otherwise approved by Architect.

D. Coloring Admixture: ASTM C 979, synthetic or natural mineral-oxide pigments or colored water-reducing admixtures, temperature stable, non-fading, and alkali resistant.

E. Water: Potable; free from deleterious material that may affect color stability, setting, or strength of concrete and complying with chemical limits of PCI MNL 117.

F. Air-Entraining Admixture: ASTM C 260, certified by manufacturer/fabricator to be compatible with other required admixtures.

G. Chemical Admixtures: Certified by manufacturer/fabricator to be compatible with other admixtures and to not contain calcium chloride, or more than 0.15 percent chloride ions or other salts by weight of admixture.

2.7 STEEL CONNECTION MATERIALS

A. Carbon-Steel Shapes and Plates: ASTM A 36 / A 36M.

B. Carbon-Steel-Headed Studs: ASTM A 108, AISI 1018 through AISI 1020, cold finished, AWS D1.1/D1.1M, Type A or B, with arc shields and with minimum mechanical properties of PCI MNL 117, Table 3.2.3.

C. Carbon-Steel Plate: ASTM A 283 / A 283M.

D. High-Strength, Low-Alloy Structural Steel: ASTM A 572/A 572M.

E. Carbon-Steel Structural Tubing: ASTM A 500, Grade B.

F. Deformed-Steel Wire or Bar Anchors: ASTM A 496 or ASTM A 706/A 706M.

G. Carbon-Steel Bolts and Studs: ASTM A 307, Grade A / ASTM F 568M, Property Class 4.6; carbon-steel, hex-head bolts and studs; carbon-steel nuts, ASTM A 563 / A 563M; and flat, unhardened steel washers, ASTM F 844.

H. Zinc-Coated Finish: For steel items and connections exposed to exterior and unconditioned areas, apply zinc coating by hot-dip process according to ASTM A 123/A 123M or ASTM A 153/A 153M.

1. For steel shapes, plates, and tubing to be galvanized, limit silicon content of steel to less than 0.03 percent or to between 0.15 and 0.25 percent or limit sum of silicon and 2.5 times phosphorous content to 0.09 percent.
2. Galvanizing Repair Paint: High-zinc-dust-content paint with dry film containing not less than 94 percent zinc dust by weight, and complying with DOD-P-21035A or SSPC-Paint 20.

I. Shop-Primed Finish: For steel items and connections exposed to interior and conditioned areas, prepare surfaces of non-galvanized steel items, except those surfaces to be embedded in concrete, according to requirements in SSPC-SP 3 and shop-apply lead- and chromate-free, rust-inhibitive primer, complying with performance requirements in MPI 79 or SSPC-Paint 25 according to SSPC-PA 1.

J. Welding Electrodes: Comply with AWS standards.

K. Accessories: Cast-in structural steel anchors, inserts, plates, angles, clips, hangers, shims, bearing pads, and other similar accessories required to install units.

2.8 GROUT MATERIALS

A. Nonmetallic, Non-shrink Grout: Premixed, nonmetallic, noncorrosive, nonstaining grout containing selected silica sands, Portland cement, shrinkage-compensating agents, plasticizing and water-reducing agents, complying with ASTM C 1107 of consistency suitable for application within a 30-minute working time.

2.9 GUTTER DRAINAGE SYSTEM

A. Gutter drainage system at back of units may be either prefabricated silicone system or fabricated galvanized sheet steel system as indicated on the Drawings.

B. Prefabricated Silicone Gutter Drainage System: Flame-resistant extruded silicone collection channel system used to collect moisture or condensation on the back side of the units. Include accessories such as end dams, weep baffles and silicone weeps as necessary to drain collected moisture to the exterior of the building.

1. Available Manufacturers and Products: Subject to compliance with requirements of Contract Documents as judged by the Architect, manufacturers offering products that may be incorporated into the Work include but are not limited to those listed below:

    a. Basis of Design: 2DS; "Secondary Drainage Systems - Precast".

C. Fabricated Galvanized Sheet Steel Gutter Drainage System: Galvanized sheet steel collection channel system used to collect moisture or condensation on the back side of the units. Include accessories such as end dams, weep baffles, and silicone weeps as necessary to drain collected moisture to the exterior of the building.

1. Zinc-Coated (Galvanized) Sheet Steel: ASTM A 653, G90 coating designation; structural quality, not less than 0.0312 in (0.79 mm) (20 gage) unless otherwise indicated.
2. Solder for Galvanized Sheet Steel: ASTM B 32, 60 percent lead and 40 percent tin with low antimony, as recommended by manufacturer.
3. Fabricate gutter drainage system to cross section indicated with clips and accessories required for secure watertight installation. Meet recommendations of SMACNA for fabrication details and metal thicknesses.

D. Powder-Actuated Fasteners in Concrete: Fastener system of type suitable for application indicated, fabricated from corrosion-resistant materials, with clips or other accessory devices for attaching hangers of type indicated, and with capability to sustain, without failure, a load equal to 10 times that imposed by ceiling construction, as determined by testing per ASTM E 1190, conducted by a qualified testing and inspecting agency.

E. Joint Sealant: Silicone construction sealant as specified in Division 07 Section "Joint Sealants".

2.10 CONCRETE MIXTURES

A. Mix Designs: Prepare design mixtures for each type of precast concrete required.

1. Limit use of fly ash and silica fume to 20 percent of Portland cement by weight; limit metakaolin and silica fume to 10 percent of Portland cement by weight. Not allowed in face of unit mix.

B. Design mixtures may be prepared by a qualified independent testing agency or by qualified precast plant personnel at architectural precast concrete fabricator's option.

C. Limit water-soluble chloride ions to maximum percentage by weight of cement permitted by ACI 318 (ACI 318M) or PCI MNL 117 when tested according to ASTM C 1218/C 1218M.

D. Normal-Weight Concrete Mixtures: Proportion face and backup mixtures by either laboratory trial batch or field test data methods according to ACI 211.1, with materials to be used on Project, to provide normal-weight concrete with the following properties:

1. Compressive Strength: 5000 psi (34.5 MPa) minimum at 28 days.
2. Maximum Water-Cementitious Materials Ratio: 0.45.

E. Water Absorption: 6 percent by weight or 14 percent by volume according to PCI MNL 117.

F. Add air-entraining admixture at manufacturer's prescribed rate to result in concrete at point of placement having an air content complying with PCI MNL 117.

G. When included in design mixtures, add other admixtures to concrete mixtures according to manufacturer's written instructions.

2.11 MOLD FABRICATION

A. Molds: Accurately construct molds, mortar tight, of sufficient strength to withstand pressures due to concrete-placement operations and temperature changes and for prestressing and detensioning operations. Coat contact surfaces of molds with release agent before reinforcement is placed. Avoid contamination of reinforcement and prestressing tendons by release agent.

1. Place form liners accurately to provide finished surface texture indicated. Provide solid backing and supports to maintain stability of liners during concrete placement. Coat form liner with form-release agent.

B. Maintain molds to provide completed units of shapes, lines, and dimensions indicated, within fabrication tolerances specified.

1. Form joints are not permitted on faces exposed to view in the finished Work.
2. Edges and corners shall be uniformly chamfered or radius as indicated on the Drawings.

2.12 FABRICATION

A. Fabrication Quality Standards: In addition to standards listed elsewhere, comply with following, unless otherwise specified in this Section:

1. PCI MNL 117.
2. Accepted submittals.
3. Contract Documents.

B. General: Fabricate units straight and true to size and shape with exposed edges and corners precise and true so each finished unit complies with fabrication quality standard, product tolerances, and position tolerances for cast-in items.

C. Connection Hardware:

1. Fabricate cast-in anchors, inserts, plates, angles, and other anchorage hardware with sufficient anchorage and embedment to comply with delegated engineering.
2. Accurately position for attachment of loose hardware, and secure in place during precasting operations.
3. Locate anchorage hardware where it does not affect position of main reinforcement or concrete placement.
4. Furnish loose hardware items including steel plates, clip angles, seat angles, anchors, dowels, cramps, hangers, and other hardware shapes for securing architectural precast concrete units to supporting and adjacent construction.

D. Cast-in reglets, slots, holes, and other accessories in architectural precast concrete.

E. Cast-in openings larger than 10 in (250 mm) in any dimension. Do not drill or cut openings without Architect's approval.

F. Reinforcement: Comply with recommendations in PCI MNL 117 for fabricating, placing, and supporting reinforcement:

1. Clean reinforcement of loose rust and mill scale and other materials that reduce or destroy bond with concrete.
2. Accurately position, support, and secure reinforcement against displacement during concrete-placement and consolidation operations. Completely conceal support devices to prevent exposure on finished surfaces.
3. Place reinforcement to maintain at least 3/4 in (19 mm) minimum coverage. Arrange, space, and securely tie bars and bar supports to hold reinforcement in position while placing concrete. Direct wire tie ends away from finished, exposed concrete surfaces.
4. Place reinforcing steel to maintain at least 3/4 in (19 mm) minimum concrete cover. Increase cover requirements for reinforcing steel to 1-1/2 in (38 mm) when units are exposed to corrosive environment or severe exposure conditions. Arrange, space, and securely tie bars and bar supports to hold reinforcement in position while placing concrete. Direct wire tie ends away from finished, exposed concrete surfaces.
5. Install welded wire fabric in lengths as long as practicable. Lap adjoining pieces at least one full mesh spacing and wire tie laps, where required by delegated engineering. Offset laps of adjoining widths to prevent continuous laps in either direction.

G. Reinforce architectural precast concrete units to resist handling, transportation, and erection stresses.

H. Placing Concrete:

1. Comply with requirements in PCI MNL 117 and requirements in this Section for measuring, mixing, transporting, and placing concrete. After concrete batching, no additional water may be added.
2. Place face mixture to a minimum thickness after consolidation of greater of 1 in (25 mm) or 1.5 times maximum aggregate size, but not less than minimum reinforcing cover specified.
3. Place concrete in a continuous operation to prevent seams or planes of weakness from forming in units.
4. Place backup concrete mixture to ensure bond with face-mixture concrete.

5. Thoroughly consolidate placed concrete by internal and external vibration without dislocating or damaging reinforcement and built-in items, and minimize pour lines, honeycombing, or entrapped air on surfaces. Use equipment and procedures complying with PCI MNL 117.

I. Hot and Cold Weather Concrete Placement: Comply with PCI MNL or ACI 306.1 procedures for cold weather concrete placement and ACI 305R recommendations for hot weather concrete placement.

J. Handling Units: Identify pickup points of architectural precast concrete units and orientation in structure with permanent markings, complying with markings indicated on Shop Drawings. Imprint or permanently mark casting date on each architectural precast concrete unit on a surface that will not show in finished structure.

K. Curing: Cure concrete, according to PCI MNL 117, by moisture retention without heat or by accelerated heat curing using low-pressure live steam or radiant heat and moisture.

L. Defective Units: Discard and replace units that do not comply with requirements, including structural, manufacturing tolerance, and appearance, unless repairs meet requirements in PCI MNL 117 and Architect's and Owner's approval.

M. Preparation for Shipping: Prior to transporting units to the Project site, apply coating of water repellent to units as recommended by manufacturer/fabricator to protect unit surfaces from staining or moisture damage which may occur during transport. Water repellent shall not permanently change the appearance of the units from the approved field samples.

2.13 FABRICATION TOLERANCES

A. Fabricate architectural precast concrete units straight and true to size and shape with exposed edges and corners precise and true so each finished unit complies with PCI MNL 117 product tolerances as well as position tolerances for cast-in items.

B. Brick-Faced Architectural Precast Concrete Units: Restrict the following misalignments to 2 percent of number of bricks in a unit.

1. Alignment of Mortar Joints:

   a. Jog in Alignment: 1/8 in (3 mm).
   b. Alignment with Panel Centerline: Plus or minus 1/8 in (3 mm).

2. Variation in Width of Exposed Mortar Joints: Plus or minus 1/8 in (3 mm).
3. Tipping of Individual Bricks from the Panel Plane of Exposed Brick Surface: Plus 1/16 in (1.5 mm); minus 1/4 in (6 mm) less than or equal to depth of form liner joint.
4. Exposed Brick Surface Parallel to Primary Control Surface of Panel: Plus 1/4 in (6 mm); minus 1/8 in (3 mm).
5. Individual Brick Step in Face from Panel Plane of Exposed Brick Surface: Plus 1/16 in (1.5 mm); minus 1/4 in (6 mm) less than or equal to depth of form liner joint.

C. Stone Veneer-Faced (Smooth Finish) Architectural Precast Concrete Units.

1. Variation in Cross-Sectional Dimensions: For thickness of walls from dimensions indicated: Plus or minus 1/4 in (6 mm).
2. Variation in Joint Width: 1/8 in in 36 in (3 mm in 900 mm) or a quarter of nominal joint width, whichever is less.

3. Variation in Plane between Adjacent Stone Units (Lipping): 1/16 in (1.5 mm) difference between planes of adjacent units.

2.14 CONCRETE-FACED UNIT FINISHES

A. Unit Finish: Unit faces shall be free of joint marks, grain, and other obvious defects. Corners, chamfers, and including false joints shall be uniform, straight, and sharp.

B. Exposed Face Surfaces: As scheduled or as indicated in Design Selections; match approved sample units for aesthetic purposes.

C. Exposed Top, Bottom, and Sides Surfaces: Match exposed face surface finish.

D. Exposed Back Surfaces: Smooth, steel-trowel finish.

E. Unexposed Surfaces: Float finish.

2.15 SOURCE QUALITY CONTROL

A. Quality-Control Testing: Test and inspect units according to PCI MNL 117 requirements.

B. Owner may employ an independent testing agency to evaluate architectural precast concrete fabricator's quality-control and testing methods.

1. Allow Owner's testing agency access to material storage areas, concrete production equipment, concrete placement, and curing facilities. Cooperate with Owner's testing agency and provide samples of materials and concrete mixtures as may be requested for additional testing and evaluation.

C. Strength of precast concrete units will be considered deficient if units fail to comply with ACI 318 (ACI 318M) requirements for concrete strength.

D. Testing: If there is evidence that strength of precast concrete units may be deficient or may not comply with ACI 318 (ACI 318M) requirements, precaster will employ an independent testing agency to obtain, prepare, and test cores drilled from hardened concrete to determine compressive strength according to ASTM C 42/C 42M.

1. A minimum of three representative cores will be taken from units of suspect strength, from locations directed by Architect.
2. Cores will be tested in an air-dry condition.
3. Strength of concrete for each series of 3 cores will be considered satisfactory if average compressive strength is equal to at least 85 percent of 28-day design compressive strength and no single core is less than 75 percent of 28-day design compressive strength.
4. Test results will be made in writing on same day that tests are performed, with copies to Architect, Contractor, and precast concrete fabricator. Test reports will include the following:

    a. Project identification name and number.
    b. Date when tests were performed.
    c. Name of precast concrete fabricator.
    d. Name of concrete testing agency.

e. Identification letter, name, and type of precast concrete unit(s) represented by core tests; design compressive strength; type of break; compressive strength at breaks, corrected for length-diameter ratio; and direction of applied load to core in relation to horizontal plane of concrete as placed.

E. Patching: If core test results are satisfactory and precast concrete units comply with requirements, clean and dampen core holes and solidly fill with precast concrete mixture that has no coarse aggregate, and finish to match adjacent precast concrete surfaces.

F. Defective Work: Units not complying with requirements, including strength, manufacturing tolerances, and finishes, are defective. Replace with units that comply with requirements.

PART 3 - EXECUTION

3.1 EXAMINATION

A. Acceptance of Surfaces and Conditions: Examine substrates to receive products and systems and associated work for compliance with requirements and other conditions affecting performance. Proceed only when unsatisfactory conditions have been corrected in a manner complying with Contract Documents. Starting work within a particular area will be construed as acceptance of surface conditions.

B. Acceptance of Building Structural Frame: Do not install units until supporting cast-in-place concrete building structural framing has attained minimum allowable design compressive strength, supporting structural steel framing, or other structure is complete.

3.2 INSTALLATION, GENERAL

A. Installation Quality Standards: In addition to standards listed elsewhere, perform Work according to following, unless otherwise specified:

1. PCI MNL 127.
2. Respective manufacturer/fabricator's written installation instructions.
3. Accepted submittals.
4. Contract Documents.

3.3 PREPARATION

A. General: Comply with manufacturer/fabricator's instructions, recommendations, and specifications for cleaning and surface preparation. Surfaces shall have no defects, contaminants, or errors which would result in poor or potentially defective installation or would cause latent defects in Work.

3.4 INSTALLATION OF ARCHITECTURAL PRECAST CONCRETE

A. Erection: Install units level, plumb, in alignment, and square within specified allowable tolerances.

1. Maintain horizontal and vertical joint alignment and uniform joint width as erection progresses.
2. Remove projecting lifting devices and use sand-cement grout to fill voids within recessed lifting devices flush with surface of concrete.
3. Unless otherwise indicated, maintain uniform joint widths of 3/4 in (19 mm).

B. Attachments, General: Connect units in position by bolting, welding, or grouting.

C. Bolted Connections: Use lock washers, lock nuts, or other acceptable means to prevent loosening of bolted connections.

D. Welding: Perform welding in compliance with AWS D1.1/D1.1M and AWS D1.4 with qualified welders.

1. Protect units from damage by field welding or cutting operations, and provide noncombustible shields as required.
2. Repair damaged galvanized steel surfaces by cleaning and applying a coat of galvanizing repair paint to galvanized surfaces.
3. Repair prime painted steel by cleaning and re-priming damaged painted surfaces.

E. Grouting Connections:

1. Grout connection block-outs after final adjustment.
2. Retain grout in place until hard enough to support itself.
3. Pack spaces with stiff grout material, tamping until voids are completely filled.
4. Place grout to finish smooth, level, and plumb with adjacent concrete surfaces.
5. Keep grouted joints damp for not less than 24 hours after initial set.
6. Promptly remove grout material from exposed surfaces before it affects finishes or hardens.

3.5 ERECTION TOLERANCES

A. Erect architectural precast concrete units level, plumb, square, true, and in alignment without exceeding the noncumulative erection tolerances of PCI MNL 117, Appendix I.

B. Gutter Drainage System: Securely attach gutter drainage system to back of units using powder actuated fasteners as indicated on the Drawings. Seal joints with silicone joint sealant as specified in Division 07 Section "Joint Sealants". Slope system to positive drain to weeps.

3.6 FIELD QUALITY CONTROL

A. Testing Agency Field Service: The Owner may employ and pay a qualified independent testing agency to perform field quality control. Materials and installation failing to meet specified requirements shall be replaced at Contractor's expense. Retesting of materials and installations failing to meet specified requirements shall be done at Contractor’s expense.

B. Field welds will be subject to visual inspections and nondestructive testing according to ASTM E 165 or ASTM E 709. High-strength bolted connections will be subject to inspections.

C. Testing agency will report test results promptly and in writing to Contractor and Architect.

D. Repair or remove and replace work where tests and inspections indicate that it does not comply with specified requirements.

E. Additional testing and inspecting, at Contractor's expense, will be performed to determine compliance of replaced or additional work with specified requirements.

3.7 REPAIRS

A. Procedures:

1. Repair exposed surfaces of units to match color, texture, and uniformity of surrounding precast architectural concrete if permitted by Architect and Owner. Architect and Owner reserves right to reject repaired units that do not comply with requirements.
2. Mix patching materials and repair units so cured patches blend with color, texture, and uniformity of adjacent exposed surfaces and show no apparent line of demarcation between original and repaired Work, when viewed in typical daylight illumination from a distance of 20 ft (6 m).
3. Prepare and repair damaged galvanized coatings with galvanizing repair paint according to ASTM A 780.
4. Wire brush, clean, and paint damaged prime-painted components with same type of shop primer.
5. Remove and replace damaged units if repairs do not comply with requirements.

3.8 CLEANING

A. Cleaning: After erection and completion of joint treatment, clean exposed surfaces of units to remove weld marks, other markings, dirt, and stains.

1. Perform cleaning procedures, if necessary, according to manufacturer/fabricator's written recommendations.
2. Do not use cleaning materials or processes that could change the appearance of exposed concrete finishes or damage adjacent materials.

3.9 FINISH SCHEDULE: Refer to Exterior Elevation drawings.

END OF SECTION

SECTION 04 2200

REINFORCED UNIT MASONRY

PART 1 - GENERAL

1.1 WORK INCLUDED

A. This section includes the construction of reinforced hollow core unit masonry, masonry veneer and special shapes. It includes all split face units and smooth face units, as well as masonry mortar and grout.

1.2 RELATED WORK SPECIFIED ELSEWHERE

A. Concrete Reinforcement - Section 03 2000

B. Division 07 Section “Water Repellents” for water repellents applied to unit masonry assemblies.

C. Division 07 Section “Sheet Metal Flashing and Trim” for exposed sheet metal flashing.

D. Division 07 Section “Fire stopping” for fire stopping at tops of masonry walls and at openings in masonry walls.

E. Division 08 Section “Louvers and Vents” for wall vents (brick vents).

F. Products furnished, but not installed, under this Section include the following:

1. Anchor sections of adjustable masonry anchors for connecting to structural frame, installed under Division 05 Section “Structural Steel” and Division 13 Section “Metal Building Systems”.

G. Products installed, but not furnished, under this Section include the following:

1. Cast-stone trim, furnished under Division 04 Section “Cast Stone”.

2. Steel lintels for unit masonry, furnished under Division 05 Section “Metal Fabrications”.

3. Manufactured reglets in masonry joints for metal flashing, furnished under Division 07 Section “Sheet Metal Fabrications”.

4. Hollow-metal frames in unit masonry openings, furnished under Division 08 Section “Steel Doors and Frames”.

1.3 QUALITY ASSURANCE

A. Reference Standards

1. ASTM International (ASTM), latest versions.

a.	ASTM A 615/ A615M	Standard Specification for Deformed and Plain Carbon-Steel Bars for Concrete Reinforcement
b.	ASTM C 90	Standard Specification for Load bearing Concrete Masonry Units

c. ASTM C 780 Standard Test Methods for Preconstruction and Construction Evaluation of Mortars for Pain and reinforced Masonry

d. ASTM C 270 Standard Specification for Mortar for Unit Masonry

e. ASTM C 476 Standard Specification for Grout for Masonry

f. ASTM C 1019 Standard Test Method for Sampling and Testing Grout

2. American Concrete Institute (ACI), latest verson.

a. ACI 530.1 Specification for Masonry Structures

1.4 SUBMITTALS

A. Product Data: Submit sample of exposed masonry unit of each color and texture to be used to complete the work. Submit copies of test reports performed within last 12 months for representative specimens to be used in accordance with ASTM C 140 for strength, absorption and moisture content, and ASTM C 426 for drying shrinkage.

B. Test Reports: Submit copies of test reports for masonry units, mortar and grout.

1.5 PRODUCT DELIVERY, STORAGE, AND HANDLING

A. Store masonry units above ground on level platforms, which allows air circulation under stacked units.

B. Cover and protect against wetting prior to use.

C. Handle units on pallets or flat bed barrows.

D. Store cementitious ingredients in weather-tight enclosures.

E. Waste Management and Disposal: As specified in Division 01 Section “Construction Waste Management” and as follows:

1. Separate and recycle waste materials in accordance with the Waste Management Plan and to the maximum extent economically feasible.

a. Fold up metal banding; flatten and place in designated area for recycling.

b. Collect wood packing shims and pallets; place in designated area.

2. Recycling: Undamaged, excess masonry materials are Contractor’s property and shall be removed from the Project site for his use.

3. Disposal as Fill Material: Dispose of clean masonry waste, including broken masonry units, waste mortar, and excess or soil contaminated sand, by crushing and mixing with fill material as fill is placed.

a. Crush masonry waste to less than 2 inches in greatest dimension.

b. Mix masonry waste with at least 2 parts specified fill material for each part masonry waste. Fill material is specified in Division 31 Section "Earth Moving".

c. Do not dispose of masonry waste as fill within 18 inches of finished grade.

4. Excess Masonry Waste: Remove excess, clean masonry waste that cannot be used as fill, as described above, and other masonry waste and legally dispose of off Owner's property.

PART 2 - PRODUCTS

2.1 MATERIALS

A. Hollow Core Split Faced Scored Units: ASTM C 90, see architectural drawings for locations.

B. Hollow Core Units: ASTM C90.

C. Burnished, see architectural drawings for locations.

D. Aggregate: Scoria, natural color at exposed block.

E. Aggregate: Natural color at concealed block.

F. Mortar: ASTM C 270 "Standard Specification for Mortar for Unit Masonry," Type S, f'c = 1800psi.

G. Grout: ASTM C 476 "Standard Specification for Grout for Masonry."

H. Cell Reinforcing: ASTM A 615 "Standard Specification for Deformed and Plain Billet-Steel Bars for Concrete Reinforcement," Grade 60. Comply with Section 03 20 00.

I. Bond Beam and Lintel Reinforcing: ASTM A 615, Grade 60. Comply with Section 03 20 00.

J. Joint Reinforcing: Hot Dipped Galvanized, Standard Ladder Type 9 Gage Wire Dur-O-Wal or approved equal.

K. Control Joint Material: Rubber, neoprene or PVC joint material for use with standard sash block by Dur-O-Wal or approved equal.

L. Vertical Bar Positioner: Steel by Dur-O-Wal or approved equal.

M. Mortar Plasticizer: Easy Spread by American Colloid Company or approved equal.

PART 3 - EXECUTION

3.1 GENERAL

A. Provide jamb, header, lintel, bond beam, etc. units as required to complete the work. Lay only dry and unfrozen masonry units.

B. All exposed masonry shall be scoria aggregate, split face, scored finish unless noted otherwise on the drawings. Masonry not exposed to view may be smooth finished.

C. Discard any broken, chipped, or discolored masonry units.

D. Use masonry saws to cut and fit masonry units.

E. Lay units in running bond pattern with vertical joints located at center of masonry units in alternate course below.

F. Set units plumb, true to line and with level courses accurately spaced.

G. Adjust masonry unit to final position while mortar is soft and plastic.

H. Anchors, flashing accessories and similar devices shall be built in as masonry progresses.

3.2 MORTAR

A. Mix all cementitious materials and sand in a mechanical batch mixer for a minimum of 5 minutes. Adjust the consistency of the mortar to the satisfaction of the mason, but add only as much water as is compatible with convenience in using the mortar. If the mortar begins to stiffen from evaporation or from absorption of a pat if the mixing water, re-temper the mortar immediately by adding water, and remix the mortar.

B. Mortar for exterior walls shall have waterproofing added in accordance with the manufacturer's recommendations.

C. Addition of admixtures or re-tempering of mortar at the mixer to extend its use will not be permitted.

3.3 RE-TEMPERING

A. All mortar shall be used within 2-1/2 hours of initial mixing and no mortar shall be used after it has begun to set. Re-tempering of mortar in which setting has saturated will not be permitted. However, mortar shall be re-tempered, except as above qualified, as necessary to keep it plastic.

3.4 JOINTS

A. Provide joints 3/8 inch nominal thickness and tooled unless shown otherwise on drawings.

B. Construct uniform joints.

C. Units shall be placed with sufficient pressure to extrude mortar and provide a tight joint.

3.5 REINFORCEMENT

A. Reinforcement shall be secured against displacement prior to grouting at a spacing not greater than 4 feet.

B. Provide rebar lap lengths specified in the General Structural Notes on the drawings. Provide 6 inches minimum lap for all ladder type joint reinforcing.

3.6 GROUTING

A. Grout all cells, which are below grade.

B. Grout lintel blocks over masonry openings and each jamb of masonry openings.

C. Grout pours shall not exceed 5 feet in height.

D. Grout all cells solid, which contain reinforcing.

Grout shall have a slump range of 8 to 11 inches tested in accordance with ASTM C143.

Consolidate grout pours 12 inches or less in height by mechanical vibration or by puddling. Consolidate pours exceeding 12 inches in height by mechanical vibration and reconsolidate by mechanical vibration after initial water loss and settlement has occurred. Typically this occurs within 2-4 minutes of placement of grout.

Place grout within 1-1/2 hours from introducing water in the mixture and prior to initial set.

3.7 POINTING AND CLEANING

A. At completion of unit masonry work, fill holes in joints and tool.

B. Cut out and repoint defective joints.

C. Dry brush masonry surface after mortar has set, at end of each day's work and after final pointing.

D. Leave work and surrounding surfaces clean and free of mortar spots and droppings.

3.8 PROTECTION OF WORK

A. Protect sills, ledges, and offsets from mortar drippings or other damage during construction.

B. Remove misplaced mortar or grout immediately.

C. Cover top of walls with non-staining waterproof coverings when work is not in progress.

D. Provide adequate bracing during construction to prevent damage from wind loads.

3.9 WEATHER CONDITIONS

A. Do not place concrete masonry units when air temperature is below 20 degrees F.

B. For temperatures between 20 degrees F and 40 degrees F, sand and mixing water shall be heated to produce mortar temperatures between 40 degrees F and 120 degrees F. Mortar shall be maintained above 32 degrees F during placement.

C. Masonry shall be protected from freezing for 24 hours after placement.

3.10 FIELD QUALITY CONTROL

A. The Owner shall employ the services of a qualified testing laboratory to perform tests and submit test reports.

B. Concrete Masonry Units (CMU): Test in accordance with ASTM C 140. “Standard Test Methods of Sampling and Testing Concrete Masonry Units.” Six units shall be sampled and tested for each lot of 10,000 units or less delivered to the job site. Twelve units shall be sampled from each lot of more than 10,000 units and less than 100,000 units.

C. Mortar: By proportions according to ASTM C 780 “Standard Test Method for Preconstruction and Construction Evaluation of Mortars for Plain and Reinforced Masonry.”

D. Grout: Mold and test 4 test specimens in accordance with ASTM C 1019 “Test Method for Sampling and Testing Grout” from each day’s grout placement. Test grout slump prior to each day’s grouting process. Submit slump value with test specimen results. See General Structural Notes for required strength.

END OF SECTION

SECTION 04 7500

ADHERED MASONRY VENEER

PART 1 - GENERAL

1.1 SUMMARY

A. Section Includes: Adhered masonry veneer and supplementary items necessary for installation.

B. Plaster System Substrate: As specified in Division 09 Section "Portland Cement Plastering".

1.2 ACTION SUBMITTALS

A. Product Data: Manufacturer's technical literature for each product and system indicated.

1. Include manufacturer's specifications for materials, finishes, construction details, installation instructions, and recommendations for maintenance.

    a. Kind, size, and color of masonry unit.
    b. Manufactured accessory product.
    c. Setting and grout products.
    d. Cleaning products, including application procedures.

B. Shop Drawings: Show details of construction, including dimensioned drawings, plans, elevations, sections, and details of components to be incorporated into Work including, but not limited to, the following:

1. Masonry Veneer Units: Show sizes, profiles, and coursing.
2. Special Masonry Veneer Shapes: Submit large-scale details for each shape required or indicated.
3. Flashing: Large-scale details for each element of flashing system showing layout, profiles, methods of joining, and anchorage details; including lintel units, shelf units, corner units, end dam units, conditions showing interface and relationship to adjacent materials, and other special applications.
4. Fabricated Flashing: Detail corner units, end-dam units, and other special applications.
5. Accessories: Show sizes, coursing, and locations.
6. Movement Joints: Show expansion and control joint locations in substrate and veneer.

C. Samples for Initial Selection: For each type of Masonry Veneer and Colored Mortar indicated. Include samples of accessories involving color selection. Samples shall show full range of colors expected; make samples using same materials to be used on Project; label samples to indicate type and amount of pigments used.

D. Samples for Verification Purposes: Submit samples for each item listed below of size and construction indicated. Where products involve normal color and texture variations, include sample sets showing the full range of variations expected.

1. Masonry Units: Full-size samples for each different type of veneer unit indicated.

2. Pigmented and Color Aggregate Mortars and Grouts: Make samples using same sand and mortar ingredients to be used on Project. Label Samples to indicate types and amounts of pigments used.
3. Accessories: Samples of manufactured products, including flashing materials and other accessories.
4. Flashing: Samples of each shape, profile, intersection and transition required, not less than 12 in (300 mm) long, including end dam and splice/lap joint for flashing; demonstrate soldering quality.

E. List of Materials Used in Constructing Wall Mock-ups:

1. Product, material, and equipment names, model numbers, lot numbers, batch numbers, source of supply, and other information required to identify items used. Include mix proportions for mortar and source of aggregates.
2. Receipt of list does not constitute acceptance of deviations from Contract Documents, unless such deviations are specifically accepted by Architect in writing.

1.3 INFORMATIONAL SUBMITTALS

A. Pre-Construction Test Reports: Written reports from independent testing agency required by "Quality Assurance".

B. Product Test Reports: Written reports based on evaluation of comprehensive tests performed by qualified testing agency, acceptable to authorities having jurisdiction, indicating that product assembly complies with requirements.

C. Hot and Cold Weather Work Plan: Submit written plan detailing methods, materials and equipment to be used to comply with weather requirements.

D. Masonry Veneer Cleaning Plan: Based on technical information provided by respective manufacturer for each masonry veneer unit to be cleaned, submit written plan for cleaning exposed masonry veneer surfaces, prepared by commercial cleaning compound manufacturer, with signature of installer indicating acceptance and include following information:

1. Qualifications of applicators.
2. Products to be used and application procedures.
3. Masonry veneer surfaces to be cleaned and required preparations.
4. Environmental requirements by authorities having jurisdiction for use and discharge of cleaning effluents.
5. Protection of surrounding areas, landscaping, and building surfaces adjacent to area of cleaning.

E. Field Quality Control Reports: Written report of testing and inspection required by "Field Quality Control".

F. Manufacturer’s Project Acceptance Document: Certification by the manufacturer that its product(s) are approved, acceptable, suitable for use in specific locations, for specific details, and for applications indicated, specified, or required.

G. Qualification Data:

1. For firms and persons specified in "Quality Assurance" to demonstrate their capabilities and experience. Include list of completed projects.

H. Warranty: Sample of warranty.

1. Provide manufacturer's written warranty covering materials and installation (labor) stating obligations, remedies, limitations, and exclusions.

1.4 CLOSEOUT SUBMITTALS

A. Maintenance Instructions: Include in operation and maintenance manual as required by Division 01 Section "Closeout Procedures". Submit manufacturer's instructions for maintenance of installed work, including methods and frequency for maintaining optimum condition under anticipated use. Include precautions against cleaning materials and methods which may be detrimental to finishes and performance.

1.5 QUALITY ASSURANCE

A. Quality Standards: In addition to specified requirements, comply with ACI 530.1/ASCE 5/TMS 402 for adhered masonry veneer classification and prescriptive requirements and local building code, whichever is more stringent.

B. Manufacturer Qualifications: Manufacturer with not less than 10 years of experience in the successful production and in-service performance of products and systems similar to scope of this Project.

C. Installer Qualifications:

1. Experience: Installer's personnel with not less than 10 years of experience in the successful performance of Work similar to scope of this Project.
2. Supervision: Installer shall maintain a competent supervisor at Project while the Work is in progress, and who has not less than 10 years of experience installing products and systems similar to scope of this Project.
3. Manufacturer Acceptance: Installer shall be certified, approved, licensed, or acceptable to manufacturer to install products.

D. Testing Agency Qualifications: An independent testing agency, acceptable to authorities having jurisdiction, qualified according to ASTM C 1093 to conduct the testing indicated.

E. Pre-Construction Setting Mortar Testing: Employ and pay an independent testing agency to perform pre-construction testing to establish compliance of proposed Work with requirements.

1. General Requirements: Test mortar for composition to establish code compliance and standard for field testing specified under "Field Quality Control" Article.
2. Bond Strength Test Method: ANSI 137.1 / ASTM C 482 Test Method for Bond Strength of Ceramic Tile to Portland Cement.
3. Reports: Interpret test results and prepare certified reports.
4. Retesting: Retesting of materials failing to meet requirements shall at Contractor's expense.

F. Sample Panels: Prior to installing masonry, build as many sample panels as required to verify selections made under submittals and to demonstrate aesthetic effects using specified materials:

1. Build approximately 48 in (1200 mm) square for each type of exposed masonry units.
2. Locate at locations indicated or, if not indicated, as directed by Architect.
3. Clean exposed faces with masonry cleaner specified.
4. Where masonry is to match existing masonry, erect panels adjacent and parallel to an existing, south-facing wall where available.
5. Notify Architect 7 days in advance of the dates and times when panels will be constructed.
6. Protect accepted sample panels with weather-resistant membrane.
7. Maintain during construction in an undisturbed condition as a standard for judging completed Work.
8. Acceptance of panels is for following aesthetic qualities; acceptance does not constitute acceptance of deviations from Contract Documents, unless specifically accepted by Architect in writing:

    a. Color, texture, and blending of masonry units.
    b. Color and blending of mortar.
    c. Relationship of mortar and sealant colors to masonry unit colors.
    d. Tooling of joints.
    e. Effectiveness of masonry cleaner.
    f. Other aesthetic qualities as determined by the Architect.

9. When directed, demolish and remove sample panels from Project site, including foundations.

G. Mock-ups: Prior to fabrication and installation, build mock-up for each form of construction and finish required to verify selections made under sample Submittals and to demonstrate aesthetic effects and qualities of materials and execution. Build mock-up using materials indicated for the completed Work.

1. Build mock-up in the location and of the size indicated or, if not indicated, as directed by Architect. Contractor shall provide structural support framework.

    a. Show typical components, attachments to building structure, and requirements of installation.

2. Notify Architect seven days in advance of the dates and times when mock-up will be installed.
3. Obtain Architect's acceptance of mock-ups before starting fabrication or installation.
4. Acceptance of mock-ups does not constitute acceptance of deviations from the Contract Documents contained in mock-ups unless such deviations are specifically noted by Contractor and accepted by Architect in writing.
5. Demolish and remove mock-ups when directed by Architect unless accepted to become part of the completed Work.

1.6 PRE-INSTALLATION CONFERENCE

A. Pre-Installation Conference: Before Work begins, conduct conference at Project site.

1. Participants:

    a. Architect.
    b. Contractor, including superintendent.
    c. Installer, including project manager and supervisor.
    d. If requested, Manufacturer's qualified technical representative.
    e. Installers of other construction interfaced with Work.

2. Minimum Agenda: Installer shall demonstrate understanding of the Work required by describing detailed procedures for preparing, installing, and cleaning the Work. Demonstration shall include, but not be limited to, following topics:

    a. Tour representative areas of Work, inspect and discuss condition of substrate, and other preparatory work performed by other trades.
    b. Review Contract Document requirements.
    c. Review approved submittals.
    d. Review inspection and testing requirements.
    e. Review environmental conditions and procedures for coping with unfavorable conditions.
    f. Resolve deviations or differences between Contract Documents and the manufacturer's specifications.

3. Record discussions, including decisions and agreements, and prepare report.

1.7 DELIVERY, STORAGE, AND HANDLING

A. Delivery: Label pallets of masonry veneer units with manufacturers name, product name, and information required to identify products.

B. Storage:

1. Masonry Veneer Units: Store on elevated platforms in a dry location. If units are not stored in an enclosed location, cover tops and sides of stacks with waterproof sheeting, securely tied. If units become wet, do not install until they are dry.
2. Cementitious Materials: Store on elevated platforms, under cover, and in a dry location. Do not use cementitious materials that have become damp.
3. Aggregates: Store where grading and other required characteristics can be maintained and contamination avoided.
4. Accessories: Store to prevent corrosion and accumulation of dirt and oil.

1.8 PROJECT CONDITIONS

A. Protection during Work: Prevent excess moisture from entering Work in progress.

1. Cover tops of walls, projections, and sills with water-repellent tarps or heavy plastic sheets at end of each day's Work.
2. Cover partially completed masonry veneer when construction is not in progress.
3. Extend cover minimum of 24 in (600 mm) down both sides and hold cover securely in place.
4. Protect door and window frames from damage.

B. Stain Prevention: Prevent mortar and soil from staining exposed masonry veneer. Immediately remove mortar and soil from exposed masonry veneer.

1. Protect base of walls from rain-splashed mud and mortar splatter.
2. Protect sills, ledges, and projections from mortar droppings.
3. Protect surfaces of window and door frames, and other adjacent materials with painted and integral finishes from mortar droppings.
4. Turn scaffolding planks near Work on edge at end of each day to prevent rain from splashing mortar droppings or dirt onto face of exposed masonry.

C. Cold Weather Requirements: Comply with building code and referenced quality standard whichever is more stringent, and the following:

1. Provide heat and protection (temporary or permanent) as required to protect Work from freezing after application.
2. Distribute heat uniformly to prevent concentration of heat near sources; provide deflection or protective screens.
3. Do not use frozen materials or materials mixed or coated with ice or frost.
4. Do not build on frozen substrates.
5. Remove and replace masonry veneer damaged by frost or freezing conditions.

D. Warm Weather Requirements: Comply with building code and referenced quality standard whichever is more stringent, and the following:

1. Protect Work against uneven and excessive evaporation and from strong flows of dry air, both natural and artificial.
2. Apply and cure work as required by climatic and job conditions to prevent dryout during cure period.
3. Provide suitable coverings, moist curing, barriers to deflect sunlight and wind, or combinations of these, as required.

1.9 COORDINATION

A. Coordinate installation of products and systems with interfacing and adjoining construction to provide a successful installation without failure.

1.10 WARRANTY

A. Installer's Warranty: Furnish installer's written material and labor warranty signed by an authorized representative using installer's standard form agreeing to furnish materials and labor required to repair or replace work which exhibits material or workmanship defects caused by manufacture or design and installation of product. "Defects" is defined to include but not limited to deterioration or failure to perform as required.

1. Failures include, but are not limited to, the following:

   a. Structural failures including, but not limited to, loss of adhesion.
   b. Deterioration of materials beyond normal weathering.

2. Warranty Period: Installer shall warrant the products to be free from material and labor Defects for a period of 5 years from date of Substantial Completion

PART 2 - PRODUCTS

2.1 MANUFACTURERS AND PRODUCTS

A. Acceptable Manufacturers and Products: Subject to compliance with requirements of Contract Documents as judged by the Architect, provide product by one of manufacturers listed. If not listed, submit as substitution according to the Conditions of the Contract and Division 01 Section "Substitution Procedures".

B. Basis of Design (Product Standard): Contract Documents are based on products specified to establish a standard of quality. Other acceptable manufacturers with products having equivalent characteristics may be considered, provided deviations are minor and do not change intended aesthetic, functional and performance requirements as judged by Architect.

1. Selections: Masonry units to match CNOHC in texture and color.

2.2 MATERIALS, GENERAL

A. Single Source Responsibility: Furnish each type of product from single manufacturer. Provide secondary materials only as recommended by manufacturer of primary materials

B. Masonry Units: Obtain exposed masonry veneer units of a uniform texture and color, or a uniform blend within ranges accepted for these characteristics.

C. Cementitious Materials: Obtain cementitious ingredients of a uniform quality, including color, for each component.

D. Defective Units: Do not install units where defects, including dimensions that vary from specified dimensions by more than stated tolerances, will be exposed in completed Work or will impair quality of completed masonry.

E. Special Shapes: Provide shapes indicated and as follows for each form of masonry veneer unit required:

1. For applications requiring units of form, color, texture, and size on exposed surfaces that cannot be produced by sawing standard unit sizes.
2. For applications where shapes produced by sawing would result in sawed surfaces being exposed to view.
3. For applications where stretcher units cannot accommodate special conditions including those at L-shape corners, substrate construction and movement joints, bond beams, sashes, and lintels.
4. For units with exposed surfaces such as ends of sills, caps, and similar applications that would otherwise expose unfinished unit surfaces.

2.3 PERFORMANCE REQUIREMENTS, GENERAL

A. Performance Requirements: Adhesion between masonry veneer unit and backing shall have shear strength of not less than 215 psi (1480 kPa) according to ANSI 137.1 / ASTM C 482.

B. Shape Limitations of Individual Units:

1. Maximum Weight at Exterior Locations: Not to exceed 15 lb/sq ft (73.2 kg/sq m).

2. Maximum Weight at Interior Locations: Not to exceed 20 lb/sq ft (97.6 kg/sq m).
3. Maximum Dimension in Any One Face: Not to exceed 36 in (900 mm).
4. Overall Face Area: Not to exceed 720 sq in (0.464 sq m).
5. Thickness:

    a. Not less than as indicated.
    b. Not more than 2-5/8 in (65 mm).

2.4 MANUFACTURED STONE MASONRY UNITS

A. Product Quality Standard: Factory manufactured masonry veneer units to resemble natural stone in texture and color; composed of Portland cement, aggregates, mineral oxide pigments, and water; with following physical properties:

1. Special Shapes: Include corners, edge corners, and end edge corners.
2. Back Surface Texture: Scored, combed, wire roughened, ribbed, keybacked, or dovetailed.
3. Unit Compressive Strength: 1800 psi (12.4 MPa) average for 5 cured units according to ASTM C 192 and ASTM C 39; individual units shall not vary by more than 10 percent from average.
4. Freeze-Thaw Resistance: 3.0 percent of original weight according to ASTM C 67.
5. Exposed Faces: Manufacturer's standard.

B. Manufacturers and Products:

1. Coronado Stone Products; Coronado Stone.
2. GAF Materials Corporation; CanyonRock.
3. G.S. Harris Company, Inc.; Harristone Precast Stone Veneer (HPSV).
4. Owens Corning; Cultured Stone.

2.5 NATURAL STONE MASONRY UNITS

A. Stone, General: Natural quarried stone, pre-fabricated into modular tiles having uniform and consistent dimensional tolerances; with sawn backs.

1. Back Surface Texture: Scored, combed, wire roughened, ribbed, keybacked, or dovetailed.

B. Material Quality Standard: Limestone, ASTM C 568.

2.6 TILE MORTAR SETTING MATERIALS

A. Material Quality Standards: ANSI A118 Series as indicated.

B. Setting Mortar:

1. Material Quality Standard: ANSI A118.4, manufacturer’s premium, single component system for mixing at time of installation.
2. Basis of Design:

    a. Laticrete International, Inc.; Laticrete Masonry Veneer Mortar.
    b. Laticrete International, Inc.; Laticrete 254 Platinum.

C. Latex-Portland Cement Sanded Grout for Joints Greater than 1/8 in (3 mm) Wide:

1. Material Quality Standard: ANSI A118.7, with following physical properties:

   a. Manufacturer's premium polymer modified sanded grout product.
   b. Integral antimicrobial product added during manufacturing to resist mold and mildew growth.

2. Basis of Design:

   a. Laticrete International, Inc.; PermaColor Grout.

2.7 ACCESSORIES FOR CEMENTITIOUS (NON-PLASTER) SUBSTRATES

A. Flashing Materials for Cementitious Substrates:

1. Sheet Metal Flashing: Metal flashing, where flashing is exposed or partly exposed and where indicated, complying with SMACNA's "Architectural Sheet Metal Manual" and as follows:

   a. Material:

      1) Material Quality Standard: ASTM A 240 / A 240M or A 666, Type 304.
      2) Material Quality Standard: ASTM A 240 / A 240M or A 666, Type 316.
      3) Description: Stainless steel, 2D annealed finish, not less than 0.0250 in (24 ga) (0.64 mm) thick, unless noted otherwise.

   b. Solder:

      1) Material Quality Standard: ASTM B 32, Grade Sn60.
      2) Description: Solder with acid flux of type recommended by stainless steel sheet manufacturer; use a noncorrosive rosin flux over tinned surfaces.

2. Sealant for Sheet Metal Flashing: Exterior non-sag silicone sealant, Class 150/50, as specified in Division 07 Section "Joint Sealants".
3. High-Temperature Rubberized Asphalt Flashing:

   a. Description: Minimum 40 mils (1.0 mm) thick, consisting of slip-resisting polyethylene-film top surface laminated to layer of butyl or SBS-modified asphalt adhesive, with release-paper backing; cold applied. Provide primer when recommended by underlayment manufacturer.
   b. Thermal Stability: ASTM D 1970; stable after testing at 240 deg F (116 deg C).
   c. Low-Temperature Flexibility: ASTM D 1970; passes after testing at minus 20 deg F (29 deg C).
   d. Available Manufacturers and Products:

      1) Carlisle Coatings & Waterproofing; CCW WIP 300HT.
      2) Grace Construction Products; Ultra.
      3) Henry Company; Blueskin PE200 HT.
      4) Metal-Fab Manufacturing, LLC; MetShield.
      5) Owens Corning; WeatherLock Metal High Temperature Underlayment.

4. Adhesives, Primers, and Seam Tapes for Flashings: Flashing manufacturer's standard products or products recommended by flashing manufacturer for bonding flashing sheets to each other and to substrates.

B. Strip Lath Reinforcement for Cementitious Substrates:

1. Product Description: Strips of expanded, self-furred, diamond mesh lath, 3.4 lb/sq yd (1.8 kg/sq m), not less than 6 in (150 mm) wide, with smooth edges.
2. Material Quality Standard: Hot-dip galvanized steel, ASTM A 653 / A 653M, G60 (Z180) zinc coating.
3. Available Manufacturers and Products:

    a. Alabama Metal Industries Corp. (AMICO); Striplath.
    b. California Expanded Metal Co. (CEMCO); Stripite.
    c. Clark Western; Striplath.
    d. Dietrich Metal Framing; Strip Lath (LAST).

C. Powder Actuated Fasteners for Attaching Strip Lath Reinforcement to Cementitious Substrates:

1. Product Quality Standard: ANSI A10.3.
2. Product Description: Low velocity, powder actuated fasteners, stainless steel drive pins, length as required for minimum 3/4 in (19 mm) long penetration, with washers sized engage 3 strands of lath; powder loads suitable for application indicated; sufficient to correctly attach or anchor metal lath to substrate indicated without failure.
3. Available Manufacturers:

    a. Hilti Corp.
    b. ITW Ramset/Red Head.
    c. Powers Fasteners.
    d. Simpson Strong Tie Anchor Systems.

2.8 MASONRY VENEER CLEANERS

A. Commercial Cleaning Compounds: Products as recommended and approved by masonry veneer and mortar manufacturers.

1. Description: Manufacturer formulated, general purpose cleaner for removing mortar stains, efflorescence, and other construction related stains from new masonry veneer surfaces, with following suitability requirements:

    a. Suitable for masonry veneer units and mortar installed, without discoloring or damaging masonry veneer materials.
    b. Suitable for conditions at project site, including, but not limited to, windows, doors, other exterior wall elements, and adjacent walks or landscaping.

2. Manufacturers:

    a. Diedrich Technologies, Inc.
    b. EaCoChem.
    c. Prosoco, Inc.

B. Cleaning Restrictions: Following methods are not permitted nor will they be allowed:

1. Hydrochloric acid.
2. Muratic acid.
3. Pressurized water blasting.
4. Abrasive blasting.

2.9 METAL FLASHING FABRICATION

A. Field Measurements: Where metal flashing is to fit, cope, or be tailored to other construction, check actual dimensions of other construction by accurate field measurements before fabrication of metal flashing.

B. Fabrication Procedures: Fabricate continuous flashings in sections 8 ft (2.4 m) long minimum, but not exceeding 12 ft (3.6 m). Provide splice plates at joints of formed, smooth metal flashing.

1. Shop form flashing on a bending brake.
2. Shape, trim and hand seam on bench as far as practical with proper tools.
3. Form exposed metal Work without excessive oil canning, buckling, and tool marks and that is true to line and levels indicated.
4. Make angle bends and folds for interlocking metal with full regard for expansion and contraction to avoid buckling or fullness in metal after installation.
5. Form materials to shape indicated with straight lines, sharp angles and smooth curves.
6. Fold and hem exposed edges of flashings.

C. Flashing Joinery: Fabricate interior and exterior corners, intersections, and complex flashing conditions in shop, rather than in field, with properly folded, constructed and continuous soldered joints. Field fabricated units are not permitted and will not be allowed.

2.10 SETTING MORTAR AND GROUT MIX

A. General Procedures:

1. Mix to comply with referenced quality standards and manufacturers' written instructions.
2. Add materials, water, and additives in accurate proportions.
3. Use type of mixing equipment, speeds, containers, time, and other procedures to produce uniform quality with optimum performance characteristics for installations indicated.

PART 3 - EXECUTION

3.1 EXAMINATION

A. Acceptance of Surfaces and Conditions: Examine substrates to receive products and systems and associated work for compliance with requirements and other conditions affecting performance. Proceed only when unsatisfactory conditions have been corrected in a manner complying with Contract Documents. Starting work within a particular area will be construed as acceptance of surface conditions.

3.2 INSTALLATION, GENERAL

A. Installation Quality Standards: In addition to standards listed elsewhere, perform Work according to most restrictive of the following standards:

1. ACI 530.1/ASCE 5/TMS 402 and local building code.
2. Respective manufacturer's written installation instructions.
3. Accepted submittals.
4. Contract Documents.
5. ANSI A108.5.

3.3 PREPARATION

A. General: Comply with manufacturer's instructions, recommendations, and specifications for cleaning and surface preparation. Surfaces shall have no defects, contaminants or errors which would result in poor or potentially defective installation or would cause latent defects in Work.

1. Verify that concrete substrates are dry and free of laitance, glaze, efflorescence, curing compounds, form-release agents, dust, dirt, grease, oil, and other contaminants incompatible with adhered masonry veneer.

    a. If necessary, shot-blast concrete substrate with an apparatus recommended by setting materials manufacturer.
    b. Repair damaged and deteriorated concrete.
    c. Use patching and fill material to fill holes and depressions in substrates.

3.4 APPLICATION OF PLASTER SYSTEM SUBSTRATE

A. Scratch and Brown Coat Plaster System over Metal Lath: As specified in Division 09 Section "Portland Cement Plastering".

3.5 INSTALLATION OF ADHERED MASONRY VENEER UNITS

A. Openings: Leave for equipment to be installed before completion of masonry veneer; after installation of equipment, complete masonry veneer to match construction immediately adjacent to opening.

B. Cutting: Use full-size units without cutting if possible. If cutting is required to provide a continuous pattern or to fit adjoining construction, cut units with motor-driven saws; provide clean, sharp, un-chipped edges. Install cut units with cut surfaces and, where possible, cut edges concealed.

C. Layout: Lay out walls in advance for accurate spacing of surface bond patterns, uniform joint thicknesses, accurate location of openings, movement-type joints, returns, and offsets. Avoid using of less than half-size units at corners, jambs, and where possible at other locations.

1. Masonry veneer shall not be placed over building expansion or control joints. Provide movement joints and continue construction, control, and expansion joints in building structure or substrate construction through masonry veneer work and as indicated on Drawings.
2. Provide movement joints where masonry veneer work abuts a restraining structure or dissimilar assembly.
3. When metal trim or sealant/backer is used for joint, width shall not be less than width of joint in building structure.

D. Blending of Masonry Veneer Units: Mix units for exposed unit masonry from several pallets or cubes as they are placed to produce uniform blend of colors and textures. If color blending is a critical aspect of Work, manufacturer shall provide instructions for blending.

E. Mortar Workability: Mortar with added color pigments shall not be retempered. Discard mortar that has begun to stiffen or is not used within 2.5 hours after initial mixing.

F. Work Pattern: Begin Work at bottom of wall and proceed up, or begin and proceed down wall, according to manufacturer's instructions.

G. Built-In Work: As construction progresses, build in items specified in this and other Sections. Fill in solidly with masonry veneer around built-in items.

H. Adhering Method over Framed Construction with Plaster System Substrate: Adhere masonry veneer units to cured Plaster System Brown Coat using mortar according to manufacturer's instructions:

1. Mortar Setting Bed:

a. Completely coat back of masonry units and face of plaster with setting mortar bond coat, then apply setting mortar to both surfaces.

1) Key a thin coat of setting mortar into back of masonry and substrate with straight trowel, then comb setting mortar with notched trowel onto back of masonry and substrate.

b. Apply 3/8 to 1/2 in (10 to 12 mm) thick layer of setting mortar. Use sufficient setting mortar so a slight excess will be forced out the edges of masonry units as they are set. Tap units into place, completely filling space between units and plaster to provide 100 percent coverage according to manufacturer's instructions.
c. Remove excess mortar; do not allow mortar to dry on face of units.

I. Adhering Method over Concrete Construction: Adhere masonry veneer units to cured concrete substrates using mortar according to manufacturer's instructions:

1. Mortar Setting Bed:

a. Completely coat back of masonry units and face of concrete with setting mortar bond coat, then apply setting mortar to both surfaces.

1) Key a thin coat of setting mortar into back of masonry and substrate with straight trowel, then comb setting mortar with notched trowel onto back of masonry and substrate.

b. Apply 3/8 to 1/2 in (10 to 12 mm) thick layer of setting mortar. Use sufficient setting mortar so a slight excess will be forced out the edges of masonry units as they are set. Tap units into place, completely filling space between units and plaster to provide 100 percent coverage according to manufacturer's instructions.
c. Remove excess mortar; do not allow mortar to dry on face of units.

J. Adhering Method over Interior Masonry Construction: Adhere masonry veneer units to interior masonry construction using mortar according to manufacturer's instructions:

1. Mortar Setting Bed:

    a. Completely coat back of masonry units and face of plaster with setting mortar bond coat, then apply setting mortar to both surfaces.

        1) Key a thin coat of setting mortar into back of masonry and substrate with straight trowel, then comb setting mortar with notched trowel onto back of masonry and substrate.

    b. Apply 3/8 to 1/2 in (10 to 12 mm) thick layer of setting mortar. Use sufficient setting mortar so a slight excess will be forced out the edges of masonry units as they are set. Tap units into place, completely filling space between units and plaster to provide 100 percent coverage according to manufacturer's instructions.
    c. Remove excess mortar; do not allow mortar to dry on face of units.

K. Adhering Method over Exterior Masonry Construction with Plaster System Substrate: Adhere masonry veneer units to cured Plaster System Brown Coat using mortar according to manufacturer's instructions:

1. Mortar Setting Bed:

    a. Completely coat back of masonry units and face of plaster with setting mortar bond coat, then apply setting mortar to both surfaces.

        1) Key a thin coat of setting mortar into back of masonry and substrate with straight trowel, then comb setting mortar with notched trowel onto back of masonry and substrate.

    b. Apply 3/8 to 1/2 in (10 to 12 mm) thick layer of setting mortar. Use sufficient setting mortar so a slight excess will be forced out the edges of masonry units as they are set. Tap units into place, completely filling space between units and plaster to provide 100 percent coverage according to manufacturer's instructions.
    c. Remove excess mortar; do not allow mortar to dry on face of units.

L. Joints:

1. Using a grout bag, fill joints with setting mortar.
2. Finish joints that will remain exposed with a tool slightly larger than joint width to form a concave profile. Tool joints after mortar has taken its initial set and in such a manner as to squeeze mortar back into joint.

3.6 EMBEDDED FLASHINGS

A. General: Drawings may not necessarily indicate or describe full extent of Work required for completion of embedded flashing.

B. Reglets and Nailers: Install for flashing and other related construction where they are shown.

C. Scheduled Locations: In addition to conditions shown on Drawings, install embedded flashings at following locations to direct infiltrated water to exterior:

1. Heads, jambs and sills at through-wall openings.

2. Other obstructions.

D. Preparation: Substrate surfaces shall be smooth and free from projections that could puncture flashing.

E. Flashing Installation:

1. Install true to line and levels indicated; minimize quantity of lap joints by using longest units possible.
2. Set in proper locations with outside hemmed edges flush with building face location indicated; securely attach to substrate with same fasteners as used for attaching metal lath.
3. Terminate ends of horizontal flashings with properly folded and constructed end dams with a depth of not less than indicated, with continuous soldered joints.
4. At lap joints of horizontal flashings, form neat and aligned joints by interlocking splice plate within hemmed edge of sheet metal flashing profile; apply sealant and rubberized asphalt flashing as indicated to create water-resistant joint.

F. Examination and Repair: Immediately prior to installing masonry veneer, examine exposed surfaces of flashing and seal penetrations and damaged areas with rubberized asphalt flashing material before covering with masonry veneer.

3.7 MASONRY VENEER EXPANSION JOINTS

A. General: Install masonry veneer expansion joints materials as Work progresses. Do not allow materials to span masonry veneer expansion joints without provision to allow for in-plane wall or partition movement. Maintain joints free and clear of mortar.

1. Movement joints including expansion, deflection and control joints shall align through substrate and masonry veneer.

B. Distance between Control Joints: 1/2 in (12 mm) wide joints not more than 12 ft (3.6 m) on center each direction and a length-to-width ratio of 2-1/2 to 1.

1. Vertical Surfaces: Not more than 144 sq. ft. (13.4 sq. m).
2. Horizontal Surfaces: Not more than 100 sq. ft. (9.3 sq. m).

C. Form open joint of width indicated for installation of sealant and backer rod specified in Division 07 Section "Joint Sealants".

D. Build in horizontal pressure-relieving joints where indicated; construct of width required.

3.8 FIELD QUALITY CONTROL

A. Manufacturer's Field Service: Manufacturer's qualified technical representative shall periodically inspect Work to ensure installation is proceeding in accordance with manufacturer's designs, recommendations, instructions, and warranty requirements. Representative shall submit written reports of each visit indicating observations, findings, and conclusions of inspection.

1. Manufacturer's Technical Representative Qualifications: Direct employee of technical services department of manufacturer with experience in providing recommendations, observations, evaluations, and problem diagnostics.

B. Manufacturer's Field Service - Masonry Veneer Cleaning Product: Manufacturer's qualified technical representative shall periodically inspect Work to ensure installation is proceeding in accordance with manufacturer's designs, recommendations, instructions, and warranty requirements. Representative shall submit written reports of each visit indicating observations, findings, and conclusions of inspection.

1. Manufacturer's Technical Representative Qualifications: Direct employee of technical services department of manufacturer with experience in providing recommendations, observations, evaluations, and problem diagnostics.

C. Testing Agency Field Service: Employ and pay a qualified independent testing agency to perform field quality control. Materials and installation failing to meet specified requirements shall be replaced at Contractor's expense. Retesting of materials and installations failing to meet specified requirements shall be done at Contractor's expense.

1. Testing: Testing agency will test and evaluate Work during construction as necessary but not less than at following times during Work.

   a. First day.
   b. 5 percent.
   c. 15 percent.
   d. 30 percent.
   e. 60 percent.
   f. 90 percent.

2. Bond Strength Test Method: ANSI 137.1 / ASTM C 482 Test Method for Bond Strength of Ceramic Tile to Portland Cement.
3. Inspections: Testing agency will visit project site periodically at random, but not less than once during each week of masonry veneer Work, to inspect progress and to ascertain if Work complies with Contract Documents. Allow inspectors access to scaffolding and Work areas, as needed to perform inspections. Inspections will include verification that:

   a. Materials are properly stored.
   b. Installation is within specified construction tolerances.
   c. Proper mortar ingredients and mixing techniques are being used.
   d. Mortar time on board is within specified limits.
   e. Setting mortar bed is within specified limits.
   f. Joints are being properly tooled.
   g. Flashing assembly is being properly fabricated and installed.
   h. Masonry veneer expansion joints are being installed as indicated or as specified.

3.9 ADJUSTING

A. Repairs for Damage: Remove and replace masonry veneer units that are loose, chipped, broken, stained, or otherwise damaged or that do not match adjoining units. Install new units to match adjoining units and install fresh mortar, pointed to eliminate evidence of replacement.

B. Pointing: During tooling of joints, enlarge any voids or holes, except weeps and vents, and completely fill with mortar. Point up all joints including corners, openings, and adjacent construction, to provide a neat, uniform appearance. Prepare joints for application of sealants, where indicated.

3.10 CLEANING

A. In-Progress Cleaning: As soon as practical, clean masonry veneer as Work progresses by dry brushing to remove mortar fins and smears prior to tooling joints.

B. Protection: Prior to Final Cleaning, protect surrounding areas, landscaping, adjacent surfaces, and vehicles from contact with cleaning products.

C. Final Cleaning: After mortar is thoroughly set and cured, clean exposed masonry veneer as follows:

1. Protect adjacent and nearby materials, especially windows and glass, to avoid damage.
2. Remove large mortar particles by hand with wooden paddles and nonmetallic scrape hoes or chisels.
3. Test cleaning methods on mock-ups; leave one half of panel uncleaned for comparison purposes. Obtain Architect's acceptance of sample cleaning before proceeding with cleaning of permanent masonry veneer.
4. Clean masonry veneer by means recommended by cleaning product manufacturer using masonry cleaner compound as recommended and approved by masonry veneer and mortar manufacturers.
5. Avoid drifting of cleaning spray caused by wind.

3.11 ADHERED MASONRY SCHEDULE

A. Basis of Design: Masonry Units to match CNOHC in texture and color.

END OF SECTION

SECTION 05 1000

STRUCTURAL STEEL

PART 1 - GENERAL

1.1 WORK INCLUDED

A. This section includes the fabrication and erection of structural steel.

1.2 RELATED WORK SPECIFIED ELSEWHERE

A. Architecturally Exposed Structural Steel Framing – Section 05 1213

B. Steel Joists - Section 05 2100

C. Metal Deck - Section 05 3000

D. Painting and Coating – Section 09 90 00

1.3 QUALITY ASSURANCE

A. Qualifications of Fabricator: Fabricator shall have a minimum of 5 years experience in the fabrication of structural steel of structures of similar size. Fabricator shall have AISC or IAS certification or other certification as approved by the building official and the engineer of record. If the fabricator does not have approved certification, special inspection shall be done on the fabrication process and on the fabricated material as required by Section 1704.2, Inspection of Fabricators of the International Building Code. The non-certified fabricator shall engage a special inspector that meets the requirements of IBC section 1704.1 and is acceptable to the building official and the engineer of record. Provide documentation verifying certification or provide special inspector information for approval prior to issuance of a building permit.

B. Qualifications of Erector: Erector shall have a minimum of 5 years experience in the erection of structural steel of structures of similar size.

C. Qualifications of Field Welders: Welders shall be certified in accordance with AWS D1.1 within the last 12 months.

D. Reference Standards:

1. ASTM International (ASTM), latest versions.

a.	ASTM A 36/ A36M	Standard Specification for Carbon Structural Steel
b.	ASTM A 53/ A 53M	Standard Specification for Pipe, Steel, Black and Hot-Dipped, Zinc-coated Welded and Seamless
c.	ASTM A 61/ A6M	Standard Specification for General Requirements for Rolled Structural Steel Bars, Plates, Shapes, and Sheet Piling.
d.	ASTM A 307	Standard Specification for Carbon Steel Bolts and Studs, 60,000 PSI Tensile Strength

e.	ASTM A 325	Standard Specification for Structural Bolts, Steel, Heat Treated, 120/105 ksi Minimum Tensile Strength
f.	ASTM A 490	Specification for Structural Bolts, Alloy Steel, Heat Treated, 150 ksi Minimum Tensile Strength
g.	ASTM A 500/ A500M	Standard Specification for Cold-Formed Welded and Seamless Carbon Steel Structural Tubing in Rounds and Shapes
h.	ASTM A 992/ A 992M	Standard Specification for Structural Steel Shapes
i.	ASTM C 1107/ C1107M	Standard Specification for Packaged Dry, Hydraulic-Cement Grout (non-shrink)
j.	ASTM F1554	Standard Specification for Anchor Bolts, Steel, 36, 55, and 105-ksi Yield Strength.

2. American Welding Society (AWS), latest edition.

   a. AWS D1.1 Structural Welding Code-Steel

3. American Institute of Steel Construction (AISC), Steel Construction Manual, latest edition.

   a. Specification for Structural Steel Buildings

   b. AISC Code of Standard Practice

   c. Specification for Structural Joints Using ASTM A 325 or A 490 Bolts.

1.4 SUBMITTALS

A. Shop Drawings: Submit shop drawings including erection plans, complete details and schedules for fabrication and assembly of structural steel members. Include details of cuts, connections, camber, holes, and other pertinent data. Indicate welds by standard AWS symbols, and show size, length, and type of each weld. Shop drawings shall not be made by reproduction of the Contract Drawings.

B. Provide setting drawings and directions for installation of anchor bolts and other anchorages to be installed by others.

C. Welder Certification: Submit affidavit stating that all welders are certified in accordance with AWS and provide copies of welder's certificates.

1.5 PRODUCT DELIVERY, STORAGE, AND HANDLING

A. Support structural steel above ground on skids, pallets, platforms, or other supports.

B. Protect steel from damage.

C. Store packaged materials in original unbroken package or container.

D. Do not store materials on structure in a manner that might cause distortion or damage to members or supporting structures.

E. Replace damaged shapes or members.

F. Waste Management and Disposal; As specified in Division 01 Section “Construction Waste Management” and as follows: Collect cut offs and scrap and place in designated area for recycling in accordance with the Waste Management Plan and local recycler standards.

PART 2 - PRODUCTS

2.1 MATERIALS

A. All Wide Flange Shapes shall conform to ASTM A 992, Grade 50 unless noted otherwise.

B. All Angles, Channels, Plates, and Bars: ASTM A 36.

C. Structural Steel Pipe: ASTM A 53, Type E or S, Grade B Fy=35 ksi

D. Rectangular or Square Hollow Structural Section: ASTM A 500, Grade B, Fy = 46 ksi.

E. Round Hollow Structural Sections: ASTM A 500, Grade B, Fy-42 ksi.

F. Anchor Bolts: ASTM F1554, Grade 36

G. High Strength Tension Control Threaded Fasteners: Meet requirements of ASTM A 325 or ASTM A 490.

H. Headed Anchor Shear Studs: By the Nelson Division of TRW.

I. Welding Electrodes: E 70 Series.

J. Shop Primer Paint: Fabricators standard rust inhibitive primer.

K. Non-Metallic, Non-Shrink Grout: Meets the requirements of ASTM C 1107.

L. Nonmetallic, Shrinkage-Resistant Grout: ASTM C 1107, factory-packaged, nonmetallic aggregate grout, noncorrosive, non-staining, mixed with water to consistency suitable for application and a 30-minute working time. Grout shall have a minimum 28 day compressive strength of 6,000 psi.

1. Subject to compliance with requirements, provide products by one of the following or an approved equal:

   a. Five Star Fluid Grout 100; Five Star Products, Inc., Fairfield, Connecticut.

   b. Crystex; L&M Construction Chemicals, Inc. Omaha, Nebraska.

   c. Sure-Grip High Performance Grout; Dayton superior Corp., Miamisburg, Ohio.

   d. Sonnogrout 10K; Sonneborn Building Products, Shakopee, Minnesota.

   e. Sealight Pac-It Grout; W.R. Meadows, Inc., Hampshire, Illinois.

f. Enduro 50; Conspec Marketing & Manufacturing Co., Inc, Kansas City, Kansas.

2.2 FABRICATION

A. Fabrication shall be in accordance with the AISC "Code of Standard Practice for Buildings and Bridges".

B. Connections: Weld or bolt shop connections as indicated on the approved shop drawings. Design connections to support reactions and forces where indicated on the drawings.

C. Shop Welds: Shall be visually inspected by the Fabricator's quality control department.

2.3 SHOP PAINTING

A. General: Shop paint structural steel, except those members or portions of members to be embedded in concrete, mortar or to receive sprayed on fireproofing. Paint embedded steel, which is partially exposed on exposed portions and initial 2 inch of embedded areas only.

B. Do not paint surfaces, which are to be welded or high-strength bolted with friction-type connections.

C. Surface Preparation: After inspection and before shipping, clean steel work to be painted. Remove loose rust, loose mill scale, and spatter, slag or flux deposits. Clean steel in accordance with Steel Structures Painting Council (SSPC) as follows:

1. SP-1 "Solvent Cleaning"

2. SP-2 "Hand Tool Cleaning"

D. Painting: After surface preparation, apply structural steel primer paint in accordance with manufacturer's instructions. Provide one coat.

PART 3 - EXECUTION

3.1 COORDINATION

A. Field Measurements: Verify all elevations, locations, and dimensions of surfaces to receive structural steel.

B. Anchor Bolts and Other Embedded Items: Verify locations and positions of anchor bolts and other embedded items used to support structural steel.

All Anchor bolts for column base plates, anchors and bearing plates for beams shall be located prior to installation by a Registered Professional surveyor. The Professional Surveyor shall use project control points, such as bench marks, grid lines, or building corners established and accurately maintained by the General Contractor for vertical and horizontal control of location. Templates shall be used to locate groupings of bolts or anchors and shall be confirmed as to orientation and hole geometry accuracy.

Anchor bolts and bearing plates with anchors shall be stabilized against movement, vertical and horizontal, prior to and during concrete casting of concrete supporting these devices.

Upon completion of the concrete casting the Professional Surveyor shall verify vertical and horizontal locations and orientation of anchor bolts or bearing plates with anchors. A report shall be furnished to the Engineer of Record (through the General Contractor and Architect) noting non compliant locations.

The EOR, will furnish remedial actions required to correct the non compliant anchor bolt or bearing plate locations. Allow ten days for the EOR's report on remedial actions necessary.

It shall be the General Contractor's responsibility to have this work performed.

C. Correct any unsatisfactory conditions prior to erection of structural steel.

3.2 PREPARATION

A. Clean surfaces to receive structural steel prior to erection.

3.3 ERECTION

A. General: Erect structural steel in accordance with AISC "Code of Standard Practice for Steel Buildings and Bridges".

B. Field Assembly: Assemble structural steel accurately to the lines and elevations shown on the drawings. Align and adjust components accurately before fastening.

C. Temporary Bracing: Provide temporary bracing or guys to secure structural steel against wind, seismic, or construction loads. It is the responsibility of the Contractor to maintain stability of the structure during erection.

D. Field Bolted Connections: Install high strength tension control bolts in accordance with AISC Specifications for Structural Joints Using ASTM A325 and A490 Bolts and the manufacturer's instructions. Where clearance within a connection does not permit the use of tension control bolts, standard A325 bolts shall be used and inspected in accordance with the AISC Specification for Structural Joints.

E. Field Welding: Perform all welds in accordance with AWS.

F. Welded Connections: Field welds shall be visually inspected according to AWS D1.1/D1.1M.

a. In addition to visual inspection, field welds will be tested and inspected according to AWS D1.1/D1.1M and the following inspection procedures, at testing agency’s option:
   i. Liquid Penetrant Inspection: ASTM E 165.
   ii. Magnetic Particle Inspection: ASTM E 709; performed on root pass and on finished weld. Cracks or zones of incomplete fusion or penetration will not be accepted.
   iii. Ultrasonic Inspection: ASTM E 164.
   iv. Radiographic Inspection: ASTM E 94

G. Gas Cutting: Do not use gas-cutting torches in field to cut structural framing.

H. Do not enlarge unfair holes by burning. Ream holes that must be enlarged to admit bolts.

I. Field Touch-up Painting (Primer): Paint all exterior exposed bolts, washers, and nuts after connections have been tightened and checked. Paint all exterior exposed field welds. Paint all exterior exposed abrasions in shop coat. Use same paint as for shop painting.

J. Grout Placement: Comply with the manufacturer's instructions.

K. Tighten anchor bolts after supported members have been positioned and plumbed.

END OF SECTION

SECTION 05 1213

ARCHITECTURALLY EXPOSED STRUCTURAL STEEL FRAMING

PART 1 - GENERAL

1.1 RELATED DOCUMENTS

A. Drawings and general provisions of the Contract, including General and Supplementary Conditions and Division 01 Specification Sections, apply to this Section.

1.2 RELATED WORK SPECIFIED ELSEWHERE

A. Structural Steel – Section 051 10 00

B. Steel Joists - Section 05 21 00

C. Metal Deck - Section 05 30 00

D. Painting and Coating – Section 09 90 00

1.3 SUMMARY

B. Section includes architecturally exposed structural-steel (AESS).

1. Division 5 - "Structural Steel Framing" also apply to AESS.

C. Related Requirements:

1. Division 5 - "Structural Steel Framing" for additional requirements applicable to AESS.
2. Division 5 – “Metal Fabrications" for steel lintels and shelf angles not attached to structural-steel frame, miscellaneous steel fabrications, and other metal items not defined as structural steel.
   Division 9 - “Painting” and “High-Performance Coatings”

1.4 DEFINITIONS

D. AESS: Structural steel designated as "architecturally exposed structural steel" or "AESS" in the Contract Documents.

1.5 COORDINATION

E. Coordinate selection of shop primers with topcoats to be applied per Division 9 - “Painting” and “High-Performance Coatings”. Comply with paint and coating manufacturers' written recommendations to ensure that shop primers and topcoats are compatible with one another.

1.6 PREINSTALLATION MEETINGS

F. Preinstallation Conference: See Division 5 - "Structural Steel Framing"

1.7 ACTION SUBMITTALS

G. Shop Drawings: Show fabrication of AESS components. Shop Drawings for structural steel may be used for AESS provided items of AESS are specifically identified and requirements below are met for AESS.

1. Include details of cuts, connections, splices, camber, holes, and other pertinent data.
2. Include embedment Drawings.
3. Indicate welds by standard AWS symbols, distinguishing between shop and field welds, and show size, length, and type of each weld. Show backing bars that are to be removed and supplemental fillet welds where backing bars are to remain. Indicate grinding, finish, and profile of welds.
4. Indicate type, size, and length of bolts, distinguishing between shop and field bolts. Identify pretensioned and slip-critical, high-strength bolted connections. Indicate orientation of bolt heads.
5. Indicate exposed surfaces and edges and surface preparation being used.
6. Indicate special tolerances and erection requirements.

H. Samples: Submit Samples of AESS to set quality standards for exposed welds.

1. Two steel plates, 3/8 by 8 by 4 inches (9.5 by 200 by 100 mm), with long edges joined by a groove weld and with weld ground smooth.
2. Steel plate, 3/8 by 8 by 8 inches (9.5 by 200 by 200 mm), with one end of a short length of rectangular steel tube, 4 by 6 by 3/8 inches (100 by 150 by 9.5 mm), welded to plate with a continuous fillet weld and with weld ground smooth and blended.
3. Round steel tube or pipe, minimum 8 inches (200 mm) in diameter, with end of another round steel tube or pipe, approximately 4 inches (100 mm) in diameter, welded to its side at a 45-degree angle with a continuous fillet weld and with weld ground smooth and blended.

1.8 INFORMATIONAL SUBMITTALS

I. Qualification Data:

1. Installer/Erector.
2. Fabricator.
3. Welder.

J. Paint Compatibility Certificates: From manufacturers of topcoats applied over shop primers, certifying that shop primers are compatible with topcoats.

1.9 QUALITY ASSURANCE

1. Fabricator Qualifications:
   a. A qualified fabricator that participates in the AISC Quality Certification Program and is designated an AISC-Certified Plant, Category BU: Certified Building Fabricator.
   b. Minimum of 5 years' experience fabricating steel for jobs of similar size and complexity.

2. Installer Qualifications:
   a. Minimum of 5 years' experience erecting structural steel for jobs of similar size and complexity.
3. Welding Qualifications: Qualify procedures and personnel according to AWS D1.1/D1.1M, "Structural Welding Code - Steel."

K. -Painting Applicators: Qualified according to AISC's Sophisticated Paint Endorsement P1 or SSPC-QP 3, "Standard Procedure for Evaluating Qualifications of Shop Painting Applicators."

L. Mockups: Build mockups of AESS to set quality standards for fabrication and installation.

1. Build mockup of typical portion of AESS as shown on Drawings.
2. Coordinate painting requirements with Division 9 - "Paintings" and "High-Performance Coatings".
3. Approved mockups may become part of the completed Work if undisturbed at time of Substantial Completion.

1.10 DELIVERY, STORAGE, AND HANDLING

M. Use special care in handling to prevent twisting, warping, nicking, and other damage. Store materials to permit easy access for inspection and identification. Keep steel members off ground and spaced by using pallets, dunnage, or other supports and spacers. Protect steel members and packaged materials from corrosion and deterioration.

1. Do not store materials on structure in a manner that might cause distortion, damage, or overload to members or supporting structures. Repair or replace damaged materials or structures as directed.

1.11 FIELD CONDITIONS

N. Field Measurements: Where AESS is indicated to fit against other construction, verify actual dimensions by field measurements before fabrication.

PART 2 - PRODUCTS

2.1 BOLTS, CONNECTORS, AND ANCHORS

A. Tension-Control, High-Strength Bolt-Nut-Washer Assemblies: ASTM F 1852, Type 1, round-head assemblies, consisting of steel structural bolts with splined ends, heavy-hex carbon-steel nuts, and hardened carbon-steel washers.

1. Finish: Plain unless noted otherwise.

2.2 FILLER

B. Filler: Polyester filler intended for use in repairing dents in automobile bodies.

2.3 PRIMER

C. Primer: Comply with Division 9 - “Paints and Coatings”.

D. Galvanizing Repair Paint: ASTM A 780/A 780M.

E. Shop Primer for Galvanized Steel: MPI#26, cementitious galvanized metal primer.

2.4 FABRICATION

F. Shop fabricate and assemble AESS to the maximum extent possible. Locate field joints at concealed locations if possible. Detail assemblies to minimize handling and to expedite erection.

G. In addition to special care used to handle and fabricate AESS, comply with the following:

1. Fabricate with exposed surfaces smooth, square, and free of surface blemishes including pitting, rust, scale, and roughness.
2. Grind sheared, punched, and flame-cut edges of AESS to remove burrs and provide smooth surfaces and edges.
3. Fabricate AESS with exposed surfaces free of mill marks, including rolled trade names and stamped or raised identification.
4. Fabricate AESS with exposed surfaces free of seams to maximum extent possible.
5. Remove blemishes by filling or grinding or by welding and grinding, before cleaning, treating, and shop priming.
6. Fabricate with piece marks fully hidden in the completed structure or made with media that permits full removal after erection.
7. Fabricate AESS to the tolerances specified in AISC 303 for steel that is designated AESS.
8. Fabricate AESS to the tolerances specified in AISC 303 for steel that is not designated AESS.
9. Seal-weld open ends of hollow structural sections with 3/8-inch (9.5-mm) closure plates for AESS.

H. Curved Members: Fabricate indicated members to curved shape by rolling to final shape in fabrication shop.

1. Distortion of webs, stems, outstanding flanges, and legs of angles shall not be visible from a distance of 20 feet (6 m) under any lighting conditions.
2. Tolerances for walls of hollow steel sections after rolling shall be approximately 1/2 inch (13 mm).

I. Coping, Blocking, and Joint Gaps: Maintain uniform gaps of 1/8 inch (3.2 mm) with a tolerance of 1/32 inch (0.8 mm) for AESS.

J. Bolt Holes: Cut, drill, or punch standard bolt holes perpendicular to metal surfaces.

K. Holes: Provide holes required for securing other work to structural steel and for other work to pass through steel members.

1. Cut, drill, or punch holes perpendicular to steel surfaces. Do not thermally cut bolt holes or enlarge holes by burning.
2. Baseplate Holes: Cut, drill, mechanically thermal cut, or punch holes perpendicular to steel surfaces.
3. Weld threaded nuts to framing and other specialty items indicated to receive other work.

2.5 SHOP CONNECTIONS

L. High-Strength Bolts: Shop install high-strength bolts according to RCSC's "Specification for Structural Joints Using ASTM A 325 or A 490 Bolts" for type of bolt and type of joint specified.

1. Joint Type: Snug tightened unless noted otherwise.

M. Weld Connections: Comply with AWS D1.1/D1.1M for tolerances, appearances, welding procedure specifications, weld quality, and methods used in correcting welding work, and comply with the following:

1. Assemble and weld built-up sections by methods that will maintain true alignment of axes without exceeding specified tolerances.
2. Use weld sizes, fabrication sequence, and equipment for AESS that limit distortions to allowable tolerances.
3. Provide continuous, sealed welds at angle to gusset-plate connections and similar locations where AESS is exposed to weather.
4. Provide continuous welds of uniform size and profile where AESS is welded.
5. Make butt and groove welds flush to adjacent surfaces within tolerance of plus 1/16 inch, minus zero inch (plus 1.5 mm, minus zero mm) for AESS. Do not grind unless required for clearances or for fitting other components, or unless directed to correct unacceptable work.
6. Remove backing bars or runoff tabs; back-gouge and grind steel smooth for AESS.
7. At locations where welding on the far side of an exposed connection of AESS occurs, grind distortions and marking of the steel to a smooth profile aligned with adjacent material.
8. Make fillet welds for AESS oversize and grind to uniform profile with smooth face and transition.
9. Make fillet welds for AESS of uniform size and profile with exposed face smooth and slightly concave. Do not grind unless directed to correct unacceptable work.

2.6 GALVANIZING

N. Hot-Dip Galvanized Finish: Apply zinc coating by the hot-dip process to structural steel according to ASTM A 123/A 123M.

1. Do not quench or apply post-galvanizing treatments that might interfere with paint adhesion.
2. Fill vent and drain holes that are exposed in the finished Work, unless indicated to remain as weep holes, by plugging with zinc solder and filing off smooth.
3. Galvanize. As shown on drawings.

2.7 SHOP PRIMING

O. Shop prime steel surfaces except the following:

1. Surfaces embedded in concrete or mortar. Extend priming of partially embedded members to a depth of 2 inches (50 mm).
2. Surfaces to be field welded.
3. Surfaces to be high-strength bolted with slip-critical connections.
4. Surfaces to receive sprayed fire-resistive materials.
5. Galvanized surfaces.

P. Surface Preparation: Clean surfaces to be painted. Remove loose rust and mill scale and spatter, slag, or flux deposits. Prepare surfaces according to the following specifications and standards:
   6. SSPC-SP 3, "Power Tool Cleaning."
   7. SSPC-SP 6/NACE No. 3, "Commercial Blast Cleaning."

Q. Preparing Galvanized Steel for Shop Priming: After galvanizing, thoroughly clean steel of grease, dirt, oil, flux, and other foreign matter, and treat with etching cleaner.

R. Priming: Immediately after surface preparation, apply primer according to manufacturer's written instructions per Division 9 - “Painting” and “High-Performance Coatings”. Use priming methods that result in full coverage of joints, corners, edges, and exposed surfaces.

PART 3 - EXECUTION

3.1 EXAMINATION

A. Verify, with steel erector present, elevations of concrete- bearing surfaces and locations of anchor rods, bearing plates, and other embedments for compliance with requirements.

   1. Prepare a certified survey of bearing surfaces, anchor rods, bearing plates, and other embedments showing dimensions, locations, angles, and elevations.

B. Examine AESS for twists, kinks, warping, gouges, and other imperfections before erecting.

C. Proceed with installation only after unsatisfactory conditions have been corrected.

3.2 PREPARATION

D. Provide temporary shores, guys, braces, and other supports during erection to keep AESS secure, plumb, and in alignment against temporary construction loads and loads equal in intensity to design loads. Remove temporary supports when permanent structural steel, connections, and bracing are in place unless otherwise indicated.

   1. If possible, locate welded tabs for attaching temporary bracing and safety cabling where they will be concealed from view in the completed Work.

3.3 ERECTION

E. Set AESS accurately in locations and to elevations indicated and according to AISC 303 and AISC 360.

   1. Erect AESS to the tolerances specified in AISC 303 for steel that is designated AESS.
   2. Erect AESS to the tolerances specified in AISC 303 for steel that is not designated AESS.

F. Do not use thermal cutting during erection.

3.4 FIELD CONNECTIONS

G. High-Strength Bolts: Install high-strength bolts according to RCSC's "Specification for Structural Joints Using ASTM A 325 or A 490 Bolts" for type of bolt and type of joint specified.

1. Joint Type: Snug tightened unless noted otherwise.
2. Orient bolt heads in same direction for each connection and to maximum extent possible in same direction for similar connections.

H. Weld Connections: Comply with requirements in "Weld Connections" Paragraph in "Shop Connections" Article.

1. Remove backing bars or runoff tabs; back-gouge and grind steel smooth for AESS.
2. Remove erection bolts in AESS, fill holes, and grind smooth.
3. Fill weld access holes in AESS and grind smooth.

3.5 FIELD QUALITY CONTROL

I. Testing Agency: Owner will engage a qualified independent testing and inspecting agency to inspect AESS as specified in Division 5 "Structural Steel Framing." The testing agency is not responsible for enforcing requirements relating to aesthetic effect.

J. Architect will observe AESS in place to determine acceptability relating to aesthetic effect.

3.6 REPAIRS AND PROTECTION

K. Remove welded tabs that were used for attaching temporary bracing and safety cabling and that are exposed to view in the completed Work. Grind steel smooth.

L. Galvanized Surfaces: Clean field welds, bolted connections, and abraded areas and repair galvanizing to comply with ASTM A 780/A 780M.

END OF SECTION

SECTION 05 3000

METAL DECKING

PART 1 - GENERAL

1.1 WORK INCLUDED

A. Provide all metal decking complete in place as shown on the drawings, specified herein, and needed for a complete and proper installation.

1.2 RELATED WORK SPECIFIED ELSEWHERE

A. Structural Steel - Section 05 1000

B. Steel Joists - Section 05 2100

C. Cold-Formed Metal Framing - Section 05 4000

D. Painting and Coating – Section 09 90 00

1.3 QUALITY ASSURANCE

A. Reference Standards:

1. Qualification of Field Welders: Welders shall be certified in accordance with AWS D1.3 within the last 12 months.

2. ASTM International, latest versions.

a.	ASTM A 653/ A653M	Standard Specification for Steel Sheet, Zinc-Coated (Galvanized) or Zinc-Iron Alloy-Coated (Galvannealed) by the Hot-Dip Process
b.	A 1008/ A 1008M	Standard Specification for Steel, Sheet, Cold-Rolled, Carbon, Structural, High-Strength Low Alloy, High-Strength Low Alloy with Improved Formability
c.	ASTM A 1011/ A 1011M	Standard Specification for Steel, Sheet and Strip, Hot Rolled, Carbon, Structural, High-Strength Low-Alloy, High-Strength Low Alloy with Improved Formability, and Ultra- High-Strength

3. American Welding Society (AWS), latest edition.

a.	D1.3	Structural Welding Code - Sheet Steel

4. Steel Deck Institute.

a.	SDI	Design Manual for Floor Decks, Form Decks and Roof Decks
b.	SDI	Diaphragm Design Manual Third Edition

1.4 SUBMITTALS

A. Product Data: Submit manufacturer's specifications and installation instructions for each type of decking and accessories.

B. Shop Drawings: Submit detailed drawings showing layout and types of deck panels, anchorage details, and conditions requiring closure panels, supplementary framing, sump pans, cant strips, cut openings, special jointing or other accessories. Shop Drawings shall not be made by reproduction of the Contract Drawings.

1.5 PRODUCT DELIVERY, STORAGE, AND HANDLING

A. Support metal deck above ground on skids, pallets, platforms or other supports.

B. Protect metal deck from damage.

C. Store packaged materials in original unbroken package or container.

D. Waste Management and Disposal: As specified in Division 01 Section “Construction Waste Management” and as follows:

1. Collect off cuts and scrap and place in designated area for recycling in accordance with the Waste Management Plan and local recycler standards.

PART 2 - PRODUCTS

2.1 MATERIALS

A. Metal Roof Deck: ASTM A 1008, Grade C. See plans for type, size and finish. Metal deck used in fire rated assemblies shall meet the requirements of UL. The UL mark on the product will be accepted as evidence of compliance.

B. Metal Floor Deck: ASTM A 1011 with galvanized finish. See plans for type and size.

C. Finishes:

1. Painted: Manufacturer's baked-on, rust-inhibitive paint.

2. Galvanized: Conform to ASTM A 653, G60.

PART 3 - EXECUTION

3.1 COORDINATION

A. All edge angle shall be in place with proper attachment prior to installation of metal deck. All roof and floor opening frames shall be installed prior to deck installation.

3.2 INSTALLATION

A. General: Install deck units and accessories in accordance with manufacturer's recommendations and final shop drawings, and as specified herein. Locate deck bundles to prevent overloading of structural members.

B. Place deck units on supporting steel framework and adjust to final position with ends accurately aligned and bearing on supporting members before being permanently fastened. Do not stretch or contract side lap interlocks.

C. Place deck units in straight alignment for entire length of run.

D. Place deck units flat and square secured to adjacent framing without warp or excessive deflection.

E. Lap ends of deck units a minimum of 2 inches over supports.

F. Place deck units to permit proper attachment to the perimeter deck angle.

G. Do not use deck units for storage or working platforms until permanently secured.

H. Cut and neatly fit deck units and accessories around other work projecting through or adjacent to the decking, as shown.

I. Fasten deck units to steel supporting members as shown on the structural drawings.

J. Fasten side laps of units as called for on the structural drawings.

K. Care shall be exercised in the selection of electrodes and amperage to provide positive welds and to prevent high amperage blowholes.

L. Comply with AWS D1.3 requirements and procedures.

M. Provide additional metal reinforcement and closure pieces as required for strength, continuity of decking and support of other work shown.

N. Install closure strips at all locations as recommended by the manufacturer to provide a complete installation.

O. Provide cleaning and touch-up painting of field welds, abraded areas and rust spots, as required for all exposed areas after erection and before proceeding with field painting.

END OF SECTION

SECTION 054000

COLD-FORMED METAL FRAMING

PART 1 - GENERAL

1.1 SUMMARY

A. Section Includes: Cold-formed metal framing assemblies and supplementary items necessary for installation.

1. Exterior non-load-bearing curtain wall framing.
2. Soffit framing.
3. Axial load-bearing wall framing.
4. Floor joist framing.
5. Roof rafter framing.
6. Ceiling joist framing.
7. Cold-formed steel trusses for roofs.
8. Cold-formed steel trusses for floors.

1.2 DELEGATED ENGINEERING REQUIREMENTS

A. Contract Documents Design Intent: Drawings and Specifications indicate design intent for products and systems and do not necessarily indicate or specify total Work required. Contract Documents shall not be construed as an engineered design; furnish and install all Work required for a complete installation.

B. Delegated Engineering Responsibility: Contractor shall employ a qualified professional engineer to provide engineering for products and systems including attachment to building structure required to meet design intent of Contract Documents.

1. Preparation of structural analysis data including engineering calculations, shop drawings and other submittals signed and sealed by the qualified professional engineer.

C. Delegated Engineering Professional Qualifications: Professional engineer legally authorized to practice in jurisdiction where Project is located and experienced in providing engineering services of kind indicated for products and systems similar to this Project and has a record of successful in-service performance.

D. Coordination of Work:

1. Product Variations: In the event of minor differences between products and systems of acceptable or available manufacturers, Contractor shall notify Architect of such differences and resolve conflicts in a timely manner. Failure of Contractor to provide notification shall be construed as acceptance of conditions indicated, and changes caused by minor differences between products and Contract Documents shall be included in the Work at no additional cost to Owner.

2. Allowable Adjustments: Minor dimension and profile adjustments may be made in interest of fabrication or erection methods or techniques or ability to satisfy design intent, provided design intent is maintained as determined by Architect. Proposed deviations shall include a detailed analysis of impact to adjacent substrates or other building systems, including related design or construction cost impacts. If accepted by Architect, deviations causing changes in materials, constructability, substrates, or conditions shall be included in the Work at no additional cost to Owner.

1.3 ACTION SUBMITTALS

A. Product Data: Manufacturer's technical literature for each product and system indicated.

1. Include manufacturer's specifications for materials, finishes, construction details, and installation instructions.

B. Shop Drawings: Show details of fabrication and installation, including plans, elevations, sections, details of components and attachments to other work. Distinguish between shop and field-assembled work.

1. Include layout, spacing, sizes, thicknesses, and types of cold-formed steel framing; fabrication; and fastening and anchorage details, including mechanical fasteners.
2. Indicate reinforcing channels, opening framing, supplemental framing, strapping, bracing, bridging, splices, accessories, connection details, and attachment to adjoining work.

1.4 INFORMATIONAL SUBMITTALS

A. Welding Certificates: Written certifications for welding procedures and personnel.

B. Delegated Engineering Calculations: Informational submittal for products indicated to comply with design loads, include structural analysis data signed and sealed by the qualified professional engineer responsible for their preparation; test reports are not acceptable substitute for calculations.

1. Indicate loads and reactions at interface with primary structural framing and foundations.

C. Product Test Reports: Written reports based on evaluation of comprehensive tests performed by qualified testing agency indicating that each product complies with requirements.

1. Steel sheet.

a. Mill certificates or data from a qualified independent testing agency, or in-house testing with calibrated test equipment indicating steel sheet complies with requirements, including base-metal thickness, yield strength, tensile strength, total elongation, chemical requirements, and metallic-coating thickness.

2. Expansion anchors. ICC ESR or other product approval acceptable to Engineer.
3. Power-actuated anchors. ICC ESR or other product approval acceptable to Engineer.
4. Mechanical fasteners. ICC ESR or other product approval acceptable to Engineer.
5. Vertical deflection clips.
6. Horizontal drift deflection clips.
7. Miscellaneous structural clips and accessories.

D. Research/Evaluation Reports for Fire Rated Assemblies: Evidence of cold-formed metal framing's compliance with building code in effect for Project, from a model code organization acceptable to authorities having jurisdiction.

E. Field Quality Control Reports: Written report of testing and inspection required by ““Field Quality Control””.

F. Qualification Data:

1. For firms and persons specified in "Quality Assurance" to demonstrate their capabilities and experience. Include list of completed projects.

1.5 QUALITY ASSURANCE

A. Manufacturer Qualifications: Manufacturer with not less than 5 years of experience in the successful production and in-service performance of products and systems similar to scope of this Project.

B. Installer Qualifications:

1. Experience: Installer's personnel with not less than 5 years of experience in the successful performance of Work similar to scope of this Project.
2. Supervision: Installer shall maintain a competent supervisor at Project while the Work is in progress, and who has not less than 5 years of experience installing products and systems similar to scope of this Project.

C. Testing Agency Qualifications: Qualified according to ASTM E 329 for testing indicated.

D. Welding Qualifications: Qualify procedures and personnel according to the following:

1. AWS D1.1/D1.1M, "Structural Welding Code - Steel."
2. AWS D1.3/D1.3M, "Structural Welding Code - Sheet Steel."

E. Mock-ups: Prior to fabrication and installation, build mock-up for each form of construction and finish required to verify selections made under sample Submittals and to demonstrate aesthetic effects and qualities of materials and execution. Build mock-up using materials indicated for the completed Work.

1. Build mock-up in the location and of the size indicated or, if not indicated, as directed by Architect. Contractor shall provide structural support framework.

a. Show typical components, attachments to building structure, and requirements of installation.

2. Notify Architect seven days in advance of the dates and times when mock-up will be installed.
3. Obtain Architect's acceptance of mock-ups before starting fabrication or installation.
4. Acceptance of mock-ups does not constitute acceptance of deviations from the Contract Documents contained in mock-ups unless such deviations are specifically noted by Contractor and accepted by Architect in writing.

5. Demolish and remove mock-ups when directed by Architect unless accepted to become part of the completed Work.

1.6 PRE-INSTALLATION CONFERENCE

A. Pre-Installation Conference: Before Work begins, conduct conference at Project site.

1. Participants:

a. Architect.
b. Contractor, including superintendent.
c. Installer, including project manager and supervisor.
d. If requested, Manufacturer's qualified technical representative.
e. Installers of other construction interfaced with Work.

2. Minimum Agenda: Installer shall demonstrate understanding of the Work required by describing detailed procedures for preparing, installing, and cleaning the Work. Demonstration shall include, but not be limited to, following topics:

a. Tour representative areas of Work, inspect and discuss condition of substrate, and other preparatory work performed by other trades.
b. Review Contract Document requirements.
c. Review approved submittals.
d. Review inspection and testing requirements.
e. Review environmental conditions and procedures for coping with unfavorable conditions.
f. Resolve deviations or differences between Contract Documents and the manufacturer's specifications.

3. Record discussions, including decisions and agreements, and prepare report.

1.7 PROJECT CONDITIONS

A. Field Measurements: Where products and systems are indicated to fit walls and other construction, verify dimensions by field measurements before fabrication.

1.8 DELIVERY, STORAGE, AND HANDLING

A. Protect cold-formed steel framing from corrosion, moisture staining, deformation, and other damage during delivery, storage, and handling.

1.9 COORDINATION

A. Coordinate installation of products and systems with interfacing and adjoining construction to provide a successful installation without failure.

PART 2 - PRODUCTS

2.1 MANUFACTURERS

A. Acceptable Manufacturers and Products: Subject to compliance with requirements of Contract Documents as judged by the Architect, provide product by one of manufacturers listed. If not listed, submit as substitution according to the Conditions of the Contract and Division 01 Section "Substitution Procedures".

1. CEMCO.
2. ClarkDietrich Building Systems.
3. Consolidated Fabricators Corp.
4. Marino\WARE.
5. MBA Metal Framing.
6. United Metal Products, Inc.

2.2 MATERIALS, GENERAL

A. Single Source Responsibility: Furnish each type of product from single manufacturer. Provide secondary materials only as recommended by manufacturer of primary materials.

2.3 PERFORMANCE REQUIREMENTS

A. General Performance: Engineer products and systems to withstand loads within limits of stresses for the materials involved under conditions indicated and without permanent deformation or failure of materials.

B. AISI Specifications and Standards: Unless more stringent requirements are indicated, comply with AISI S100 and AISI S200.

C. Cold-Formed Steel Framing Design Standards:
1. Wall Studs: AISI S211.
2. Headers: AISI S212.
3. Lateral Design: AISI S213.

D. Fire-Resistance Ratings: Comply with ASTM E 119; testing by a qualified testing agency. Identify products with appropriate markings of applicable testing agency.

1. Indicate design designations from UL's "Fire Resistance Directory" or from the listings of another qualified testing agency.

E. Design Loads: Engineer to withstand design loads including but not limited to gravity, wind, seismic, and erection design loads and thermal movements established by authorities having jurisdiction, applicable local building codes, and as indicated on the Structural Drawings.

1. Structural Movement: Engineer to withstand movements of structure including, but not limited to, drift, twist, column shortening, long-term creep and deflection from uniformly distributed and concentrated live loads. Contractor shall obtain required design data and identify movements accommodated on submittal drawings.

a. System shall accommodate plus or minus 3/8 in (10 mm) differential vertical deflection of floors.
b. Maintain exterior wall design and incorporate an expansion and contraction joint located above ceiling line to isolate movement between interior and exterior finishes.
c. Stud depth and spacing indicated is critical for performance of other materials and shall not be changed without consideration of other materials.
d. Wind Loads: As indicated in applicable building codes, and as indicated on the Structural Drawings.

1) As indicated in Wind and/or Cladding Report.

F. Definition of Design loads for Deflection Calculations: Nominal loads combined using allowable stress load combinations and code required wind loads based on a 50 year return interval wind speed. Reductions for a lower wind speed return interval are not allowed.

G. Deflection of Framing Members: Engineer framing systems to withstand design loads without deflections greater than following, without contribution from sheathing materials:
a. Exterior Wall Framing for Adhered Masonry Veneer: Horizontal deflection of 1/720 of the wall span.
b. Ceiling Joist Framing (Interior Roof): Vertical deflection of 1/360 of the span for live loads and 1/240 for total loads of the span.

2. Design framing systems to provide for movement of framing members located outside the insulated building envelope without damage or overstressing, sheathing failure, connection failure, undue strain on fasteners and anchors, or other detrimental effects when subject to a maximum ambient temperature change of 120 deg F (49 deg C).

H. Building Maintenance Equipment: Engineer units supporting building maintenance equipment to resist pull-out and horizontal shear forces transmitted from equipment.

I. Dimensional Tolerances: Engineer products and systems to accommodate dimensional tolerances of framing members and adjacent construction.

2.4 COLD-FORMED STEEL FRAMING, GENERAL

A. Steel Sheet: ASTM A 1003/A 1003M, Structural Grade, Type H, metallic coated, of grade and coating weight as follows:

1. Grade: ST33H (ST230H) minimum, as required by structural performance.

a. ST33H (ST230H) for minimum uncoated steel thickness of 0.0428 in (1 mm) and less.
b. ST50H (ST340H) for minimum uncoated steel thickness of 0.0538 in (1.3 mm) and greater.

2. Coating: G60 (Z180) for interior locations; G90 (Z275) for exterior envelope.

B. Steel Sheet for Vertical Deflection or Drift Clips: ASTM A 653/A 653M, structural steel, zinc coated, of grade and coating as follows:

1. Grade: 33 (230) minimum, as required by structural performance.
2. Coating: G60 (Z180) for interior locations; G90 (Z275) for exterior envelope.

2.5 FRAMING

A. Steel Studs: Manufacturer's standard C-shaped steel studs, of web depths indicated, punched, with stiffened flanges, and as follows:

1. Minimum Base-Metal Thickness: 0.0428 in (1 mm).
2. Flange Width: 1-5/8 in (40 mm), minimum.

B. Steel Track: Manufacturer's standard U-shaped steel track, of web depths indicated, unpunched, with unstiffened flanges, and as follows:

1. Minimum Base-Metal Thickness: 0.0428 in (1 mm).
2. Flange Width: 1-1/4 in (32 mm), minimum.

C. Vertical Deflection and Drift Clips: Manufacturer's standard bypass or head clips, capable of accommodating upward and downward vertical displacement of primary structure through positive mechanical attachment to stud web and structure.

D. Single Deflection Track: Manufacturer's single, deep-leg, U-shaped steel track; unpunched, with unstiffened flanges, of web depth to contain studs while allowing free vertical movement, with flanges designed to support horizontal loads and transfer them to the primary structure, and as follows:

1. Minimum Base-Metal Thickness: 0.0538 in (1.3 mm).
2. Flange Width: Manufacturers standard deep flange, minimum 3 in (75 mm), at head of exterior walls where studs occur between structural floors, standard flange elsewhere.

2.6 SOFFIT FRAMING

A. Exterior Soffit Frame: Manufacturer's standard C-shaped steel sections, of web depths indicated, with stiffened flanges, and as follows:

1. Minimum Base-Metal Thickness: 0.0428 in (1 mm).
2. Flange Width: 1-5/8 in (40 mm), minimum.

2.7 FRAMING ACCESSORIES

A. Fabricate steel-framing accessories from steel sheet, ASTM A 1003/A 1003M, Structural Grade, Type H, metallic coated, of same grade and coating weight used for framing members.

B. Provide accessories of manufacturer's standard thickness and configuration, unless otherwise indicated, as follows:

1. Supplementary framing.
2. Bracing, bridging, and solid blocking.
3. Web stiffeners.
4. Anchor clips.
5. End clips.

6. Foundation clips.
7. Gusset plates.
8. Stud kickers and knee braces.
9. Joist hangers and end closures.
10. Hole reinforcing plates.
11. Backer plates.

C. Metal Deck: 9/16 in (14 mm), corrugated, ASTM A 653 / A 653M, G90 (Z275) hot-dip galvanized coating.

1. Design Uncoated-Steel Thickness: 0.02956 in (22 gage) (0.72 mm) minimum.

2.8 ANCHORS, CLIPS, AND FASTENERS

A. Steel Shapes and Clips: ASTM A 36/A 36M, zinc coated by hot-dip process according to ASTM A 123/A 123M.

B. Anchor Bolts: ASTM F 1554, Grade 36, threaded carbon-steel hex-headed bolts and carbon-steel nuts; and flat, hardened-steel washers; zinc coated by hot-dip process according to ASTM A 153/A 153M, Class C.

C. Expansion Anchors: Fabricated from corrosion-resistant materials, with allowable load or strength design capacities calculated according to ICC-ES AC193 and ACI 318, as determined by testing per ASTM E 488 conducted by a qualified testing agency.

D. Powder-Actuated Anchors: Fastener system of type suitable for application indicated, fabricated from corrosion-resistant materials, with allowable load capacities calculated according to ICC-ES AC70, as determined by testing per ASTM E 1190 conducted by a qualified testing agency.

1. Manufacturers:

a. Hilti Corp.
b. ITW Ramset/Red Head.
c. Powers Fasteners.
d. Simpson Strong Tie Anchor Systems.

2. For post-tensioned concrete, anchors shall not exceed 1 in (25 mm) embedment. Obtain Structural Engineer's written approval for all proposed anchors in post-tensioned concrete prior to installation.

E. Hold Down Clips: Wall anchoring system of type suitable for application indicated, hot dip galvanized unless indicated otherwise.

1. Basis of Design: Simpson Strong-Tie; Hold Down HD Series.

F. Mechanical Fasteners: ASTM C 1513, corrosion-resistant-coated, self-drilling, self-tapping, steel drill screws.

1. Head Type: Low-profile head beneath sheathing, manufacturer's standard elsewhere.

G. Welding Electrodes: Comply with AWS standards.

2.9 MISCELLANEOUS MATERIALS

A. Galvanizing Repair Paint: SSPC-Paint 20 or MIL-P-21035B.

B. Cement Grout: Portland cement, ASTM C 150, Type I; and clean, natural sand, ASTM C 404. Mix at ratio of 1 part cement to 2-1/2 parts sand, by volume, with minimum water required for placement and hydration.

C. Nonmetallic, Nonshrink Grout: Premixed, nonmetallic, noncorrosive, nonstaining grout containing selected silica sands, portland cement, shrinkage-compensating agents, and plasticizing and water-reducing agents, complying with ASTM C 1107/C 1107M, with fluid consistency and 30-minute working time.

D. Shims: Load bearing, high-density multimonomer plastic, and nonleaching; or of cold-formed steel of same grade and coating as framing members supported by shims.

E. Thermal Insulation: For boxed-in sections, ASTM C 665, Type I, unfaced mineral-fiber blankets produced by combining glass or slag fibers with thermosetting resins.

2.10 FABRICATION

A. Fabricate cold-formed steel framing and accessories plumb, square, and true to line, and with connections securely fastened, according to referenced AISI's specifications and standards, manufacturer's written instructions, and requirements in this Section.

1. Fabricate framing assemblies using jigs or templates.
2. Cut framing members by sawing or shearing; do not torch cut.
3. Fasten cold-formed steel framing members by welding, screw fastening, clinch fastening, pneumatic pin fastening, or riveting as standard with fabricator. Wire tying of framing members is not permitted.

    a. Comply with AWS D1.3/D1.3M requirements and procedures for welding, appearance and quality of welds, and methods used in correcting welding work.
    b. Locate mechanical fasteners and install according to Shop Drawings, with screw penetrating joined members by no fewer than three exposed screw threads.

4. Fasten other materials to cold-formed steel framing by welding, bolting, pneumatic pin fastening, or screw fastening, according to Shop Drawings.

B. Reinforce, stiffen, and brace framing assemblies to withstand handling, delivery, and erection stresses. Lift fabricated assemblies to prevent damage or permanent distortion.

C. Fabrication Tolerances: Fabricate assemblies level, plumb, and true to line to a maximum allowable tolerance variation of 1/8 in in 10 ft (1:960) and as follows:

1. Spacing: Space individual framing members no more than plus or minus 1/8 in (3 mm) from plan location. Cumulative error shall not exceed minimum fastening requirements of sheathing or other finishing materials.
2. Squareness: Fabricate each cold-formed steel framing assembly to a maximum out-of-square tolerance of 1/8 in (3 mm).

PART 3 - EXECUTION

3.1 EXAMINATION

A. Acceptance of Surfaces and Conditions: Examine substrates to receive products and systems and associated work for compliance with requirements and other conditions affecting performance. Proceed only when unsatisfactory conditions have been corrected in a manner complying with Contract Documents. Starting work within a particular area will be construed as acceptance of surface conditions.

3.2 INSTALLATION, GENERAL

A. Installation Quality Standards: In addition to standards listed elsewhere, perform Work according to following, unless otherwise specified:

1. AISI's "Standard for Cold-Formed Steel Framing - General Provisions".
2. Respective manufacturer's written installation instructions.
3. Accepted submittals.
4. Contract Documents.

B. Control of Corrosion: Prevent galvanic action and other forms of corrosion by isolating metals and other materials from direct contact with incompatible materials.

3.3 PREPARATION

A. General: Comply with manufacturer's instructions, recommendations and specifications for cleaning and surface preparation. Surfaces shall have no defects, contaminants, or errors which would result in poor or potentially defective installation or would cause latent defects in Work.

B. Coordination with Sprayed Fire-Resistive Materials:

1. Before Application: Attach continuous angles, supplementary framing, or tracks to structural members indicated to receive sprayed fire-resistive materials.
2. After Application: Remove only as needed to complete installation of cold-formed steel stud framing without reducing thickness of fire-resistive materials below that are required to obtain fire-resistance rating indicated. Protect remaining fire-resistive materials from damage.

C. Install load bearing shims or grout between the underside of load-bearing wall bottom track and the top of foundation wall or slab at locations with a gap larger than 1/4 in (6 mm) to ensure a uniform bearing surface on supporting concrete or masonry construction.

3.4 INSTALLATION, GENERAL

A. Installation Options: Cold-formed steel stud framing may be shop or field fabricated for installation, or it may be field assembled.

B. Install, bridge, and brace cold-formed steel trusses according to AISI S200, AISI S214, AISI's "Code of Standard Practice for Cold-Formed Steel Structural Framing," and manufacturer's written instructions unless more stringent requirements are indicated.

C. Install shop- or field-fabricated, cold-formed framing and securely anchor to supporting structure.

1. Screw, bolt, or weld wall panels at horizontal and vertical junctures to produce flush, even, true-to-line joints with maximum variation in plane and true position between fabricated panels not exceeding 1/16 in (1.5 mm).

D. Install cold-formed steel framing and accessories plumb, square, and true to line, and with connections securely fastened.

1. Cut framing members by sawing or shearing; do not torch cut.
2. Fasten cold-formed steel framing members by welding, screw fastening, clinch fastening, or riveting. Wire tying of framing members is not permitted.

a. Comply with AWS D1.3/D1.3M requirements and procedures for welding, appearance and quality of welds, and methods used in correcting welding work.
b. Locate mechanical fasteners and install according to Shop Drawings, and complying with requirements for spacing, edge distances, and screw penetration.

E. Install framing members in one-piece lengths unless splice connections are indicated for track or tension members.

F. Install temporary bracing and supports to secure framing and support loads comparable in intensity to those for which structure was designed. Maintain braces and supports in place, undisturbed, until entire integrated supporting structure has been completed and permanent connections to framing are secured.

G. Do not bridge building expansion joints with cold-formed steel framing. Independently frame both sides of joints.

H. Install insulation, specified in Section 072100 "Thermal Insulation," in built-up exterior framing members, such as headers, sills, boxed joists, and multiple studs at openings, that are inaccessible on completion of framing work.

I. Fasten hole reinforcing plate over web penetrations that exceed size of manufacturer's approved or standard punched openings.

J. Erection Tolerances: Install cold-formed steel framing level, plumb, and true to line to a maximum allowable tolerance variation of 1/8 in in 10 ft (1:960) and as follows:

1. Space individual framing members no more than plus or minus 1/8 in (3 mm) from plan location. Cumulative error shall not exceed minimum fastening requirements of sheathing or other finishing materials.

3.5 EXTERIOR NON-LOAD-BEARING CURTAIN WALL INSTALLATION

A. Install continuous tracks sized to match studs. Align tracks accurately and securely anchor to supporting structure as indicated.

B. Fasten both flanges of studs to bottom track, and top track if slotted, unless otherwise indicated. Space studs as follows:

1. Stud Spacing: 16 in (400 mm).

C. Set studs plumb, except as needed for diagonal bracing or required for nonplumb walls or warped surfaces and similar requirements.

D. Isolate steel framing from building structure to prevent transfer of vertical loads while providing lateral support.

1. Infill wall framing with deflection track: Install single deep-leg deflection tracks and anchor to building structure.
2. Curtain wall or panelized framing with deflection clips: Connect vertical deflection clips to bypassing studs and anchor to building structure.

E. Install horizontal bridging in wall studs, spaced vertically in rows indicated on Shop Drawings but not more than 48 in (1200 mm) apart. Fasten at each stud intersection. One of the following:

1. Top Bridging for Single Deflection Track: Install row of horizontal bridging within 18 in (450 mm) of single deflection track. Install a combination of bridging and stud or stud-track solid blocking of width and thickness matching studs, secured to stud webs or flanges.
2. Bridging: Cold-rolled steel channel, welded or mechanically fastened to webs of punched studs.

F. Install miscellaneous framing and connections, including stud kickers, web stiffeners, clip angles, continuous angles, anchors, and fasteners, to provide a complete and stable wall-framing system.

3.6 FIELD QUALITY CONTROL

A. Testing Agency: Engage a qualified independent testing agency to perform field quality control. Materials and installation failing to meet specified requirements shall be replaced at Contractor's expense. Retesting of materials and installations failing to meet specified requirements shall be done at Contractor™™s expense.

B. Field and shop welds will be subject to testing and inspecting.

C. Testing agency will report test results promptly and in writing to Contractor and Architect.

D. Remove and replace work where test results indicate that it does not comply with specified requirements.

E. Additional testing and inspecting, at Contractor's expense, will be performed to determine compliance of replaced or additional work with specified requirements.

3.7 REPAIRS AND PROTECTION

A. Galvanizing Repairs: Prepare and repair damaged galvanized coatings on fabricated and installed cold-formed steel framing with galvanized repair paint according to ASTM A 780 and manufacturer's written instructions.

B. Provide final protection and maintain conditions, in a manner acceptable to manufacturer and Installer that ensure that cold-formed steel framing is without damage or deterioration at time of Substantial Completion.

END OF SECTION

SECTION 05 4300

SLOTTED CHANNEL FRAMING

PART 1 - GENERAL

1.1 SUMMARY

A. Section Includes: Slotted channel framing and accessories necessary to complete installation.

1.2 DELEGATED ENGINEERING REQUIREMENTS

A. Contract Documents Design Intent: Drawings and Specifications indicate design intent for products and systems and do not necessarily indicate or specify total Work required. Contract Documents shall not be construed as an engineered design; furnish and install all Work required for a complete installation.

B. Delegated Engineering Responsibility: Contractor shall employ a qualified professional engineer to provide engineering for products and systems including attachment to building structure required to meet design intent of Contract Documents.

1. Preparation of structural analysis data including engineering calculations, shop drawings and other submittals signed and sealed by the qualified professional engineer.

C. Delegated Engineering Professional Qualifications: Professional engineer legally authorized to practice in jurisdiction where Project is located and experienced in providing engineering services of kind indicated for products and systems similar to this Project and has a record of successful in-service performance.

D. Coordination of Work:

1. Product Variations: In the event of minor differences between products and systems of acceptable or available manufacturers, Contractor shall notify Architect of such differences and resolve conflicts in a timely manner. Failure of Contractor to provide notification shall be construed as acceptance of conditions indicated, and changes caused by minor differences between products and Contract Documents shall be included in the Work at no additional cost to Owner.
2. Allowable Adjustments: Minor dimension and profile adjustments may be made in interest of fabrication or erection methods or techniques or ability to satisfy design intent, provided design intent is maintained as determined by Architect. Proposed deviations shall include a detailed analysis of impact to adjacent substrates or other building systems, including related design or construction cost impacts. If accepted by Architect, deviations causing changes in materials, constructability, substrates, or conditions shall be included in the Work at no additional cost to Owner.

1.3 ACTION SUBMITTALS

A. Product Data: Manufacturer’s technical literature for each product and system indicated.

1. Include manufacturer's specifications for materials, finishes, construction details, installation instructions, and recommendations for maintenance.

B. Shop Drawings: Show details of fabrication and installation, including plans, elevations, sections, details of components and attachments to other work. Distinguish between shop and field-assembled work. Include the following:

1. Strapping, bracing, bridging, splices, and connection details.
2. Materials, sizes, spacings, and thicknesses.
3. Specifics for equipment being supported by framing.
4. Adjacent building structure, mechanical and electrical elements.
5. Details for anchoring and attachment to building structure.

1.4 INFORMATIONAL SUBMITTALS

A. Delegated Engineering Calculations: Informational submittal for products indicated to comply with design loads, include structural analysis data signed and sealed by the qualified professional engineer responsible for their preparation; test reports are not acceptable substitute for calculations.

B. Qualification Data:

1. For firms and persons specified in "Quality Assurance" to demonstrate their capabilities and experience. Include list of completed projects.

1.5 QUALITY ASSURANCE

A. Manufacturer Qualifications: Manufacturer with not less than 10 years of experience in the successful production and in-service performance of products and systems similar to scope of this Project.

B. Installer Qualifications:

1. Experience: Installer's personnel with not less than 5 years of experience in the successful performance of Work similar to scope of this Project.
2. Supervision: Installer shall maintain a competent supervisor at Project while the Work is in progress, and who has not less than 5 years of experience installing products and systems similar to scope of this Project.
3. Manufacturer/Fabricator Acceptance: Installer shall be certified, approved, licensed, or acceptable to manufacturer/fabricator to install products.

1.6 PRE-INSTALLATION CONFERENCE

A. Pre-Installation Conference: Before Work begins, conduct conference at Project site.

1.7 COORDINATION

A. Coordinate installation of products and systems with interfacing and adjoining construction to provide a successful installation without failure.

PART 2 - PRODUCTS

2.1 MANUFACTURERS AND PRODUCTS

A. Acceptable Manufacturers and Products: Subject to compliance with requirements of Contract Documents as judged by the Architect, provide product by one of manufacturers listed. If not listed, submit as substitution according to the Conditions of the Contract and Division 01 Section "Substitution Procedures".

1. Horizontal Spanning Members; Upper, Lower and Main Subrails:

   a. Cooper B-Line, Inc.; MQ-124X channels
   b. Hilti; B12A channels
   c. Unistrut Corp.; P5501 channels

2. Vertical Columns:

   a. Cooper B-Line, Inc.; MQ-41 channels
   b. Hilti; BTS 22TH struts
   c. Unistrut Corp.; P9200 tubes

3. Diagonal and Horizontal Bracing:

   a. Cooper B-Line, Inc.; MQ-41 channels
   b. Hilti; BTS 22 channels
   c. Unistrut Corp.; P1000 channels

4. Inside Vertical Columns:

   a. Cooper B-Line, Inc.; MQ-41 channels
   b. Hilti; BTS 22TH struts
   c. Unistrut Corp.; P1000 H3 channels

2.2 SYSTEM DESCRIPTION

A. Equipment Support: Framing consisting of necessary slotted channel framing members such as beams, columns, braces, fittings, spanning members, longitudinal rails, track supports, and components such as channel connectors, nuts, bolts, washers, shim plates, and general hardware, for a complete and properly functioning support structure for equipment.

2.3 PERFORMANCE REQUIREMENTS

A. Structural Requirements: Engineer slotted channel framing according to delegated engineering quality standards to withstand live and dead loads according to authorities having jurisdiction, applicable local building codes, and information indicated within limits and under conditions indicated, without material failure or permanent deformation of structural members.

1. Structural Movement: Engineer to withstand movements of structure including, but not limited to, drift, twist, column shortening, long-term creep; accommodate 3/8 in (9.5 mm) differential vertical deflection of floors
2. Design Loads: As required by scheduled equipment.

3. Deflection: L/720 of span in either plane (vertical or horizontal) when maximum loading conditions is applied on either rail, due to equipment operation, including positioning of equipment at extremities of its travel.
4. Seismic Loads: Engineer to withstand effects of earthquake motions.
5. Design Criteria:

    a. Equipment Information: Coordinate engineering with information provided by manufacturer of equipment being supported.
    b. Minimum Factor of Safety: 2 based on ultimate strength under static loading conditions.

B. Delegated Engineering Quality Standards: Determine allowable working stresses of materials according to authorities having jurisdiction, applicable local building codes, framing manufacturers design data, MFMA-4, and MFMA-103.

2.4 FRAMING MATERIALS AND COMPONENTS

A. Slotted Channels:

1. Product Quality Standard: MFMA-4.
2. Interior Locations: C-shape channels fabricated from ASTM A 1011 Grade 33 cold-rolled steel sheet or ASTM A 1008 Grade 33 for hot-rolled steel sheet, structural classification; with continuous open slot formed by inturned serrated or unserrated lips, and intermediate slots in back of channel; riveted back-to-back type for primary horizontal framing members; wall thickness as required by engineering design.

    a. Painted Factory Finish: Chemically cleaned, phosphated, electro deposited acrylic or electrostatically-applied polyester finished, then baked; resisting minimum 300 hours of salt spray exposure according to ASTM B 117.
3. Profile Size: 1-5/8 in (40 mm) wide by depth required by delegated engineering.

B. Channel Connectors: Standard 2 part connectors of type, size and material required by delegated engineering; fabricated from carbon steel with nuts and threaded bolts; with or without springs; electro-galvanized finish; from same manufacturer as slotted channels.

C. General Hardware: Standard fittings, bases, brackets, and clamps of three-dimensional shape suitable for condition and type, size and material required by delegated engineering; fabricated from carbon steel; same finish as slotted channels; from same manufacturer as slotted channels.

D. Fasteners to Building Structure: Welding rods and expansion anchors as specified in Division 5 Section “Metal Fabrications.”

E. PVC Closure Strip: Paintable PVC closure strip; Unistrut Corp; P1184P, grey color.

PART 3 - EXECUTION

3.1 EXAMINATION

A. Acceptance of Surfaces and Conditions: Examine substrates to receive products and systems and associated work for compliance with requirements and other conditions affecting performance. Proceed only when unsatisfactory conditions have been corrected in a manner complying with Contract Documents. Starting work within a particular area will be construed as acceptance of surface conditions.

3.2 INSTALLATION, GENERAL

A. Installation Quality Standards: In addition to standards listed elsewhere, perform Work according to following, unless otherwise specified:

1. MFMA-103.
2. Respective manufacturer/fabricator's written installation instructions.
3. Accepted submittals.
4. Contract Documents.

B. Control of Corrosion: Prevent galvanic action and other forms of corrosion by isolating metals and other materials from direct contact with incompatible materials.

3.3 PREPARATION

A. General: Comply with manufacturer's instructions, recommendations, and specifications for cleaning and surface preparation. Surfaces shall have no defects, contaminants, or errors which would result in poor or potentially defective installation or would cause latent defects in Work.

3.4 INSTALLATION

A. Erection:

1. Install slotted channel framing members and components square, true to line, level and plumb; and securely in place to properly support schedule equipment.
2. Cut slotted channels with powered cutting saws; flame-cutting is not permitted.
3. Tighten all connections to torque required by engineering design

B. Tolerances:

1. Horizontal Mounting Surfaces: Align within 1/32 in (0.8 mm) in 24 in (600 mm) and within 1/16 in (1.5 mm) in 18 ft (5.4 m).
2. Elevation Between Rails: Difference between 2 rails within 1/16 in (1.5 mm) in 24 in (600 mm).

C. PVC Closure Strips: Install at all exposed rails.

END OF SECTION

SECTION 05 5000

METAL FABRICATIONS

PART 1 - GENERAL

1.1 SUMMARY

A. Section Includes: Metal fabrications and supplementary items necessary for installation.

1.2 DEFINITIONS

A. Unprotected Areas: Exterior areas directly that are exposed to the elements such as rain, snow, or ice.

B. Protected Areas: Interior and exterior areas that are not directly exposed to the elements such as rain, snow, or ice.

1.3 ACTION SUBMITTALS

A. Product Data: Manufacturer/fabricator’s technical literature for each product and system indicated.

1. Include manufacturer/fabricator's specifications for materials, finishes, construction details, installation instructions, and recommendations for maintenance.

B. Shop Drawings: Show details of fabrication and installation, including plans, elevations, sections, details of components and attachments to other work. Distinguish between shop and field-assembled work.

1.4 INFORMATIONAL SUBMITTALS

A. Welding Certifications: Certificates for welding procedures and personnel.

B. Product Test Reports: Written reports based on evaluation of comprehensive tests performed by qualified testing agency indicating that each product complies with requirements.

C. Field Quality Control Reports: Written report of testing and inspection required by “Field Quality Control”.

D. Manufacturer/Fabricator's Project Acceptance Document: Certification that products are approved, acceptable, suitable for use in specific locations, for specific details, and for applications indicated, specified, or required.

E. Qualification Data:

1. For firms and persons specified in "Quality Assurance" to demonstrate their capabilities and experience. Include list of completed projects.

1.5 QUALITY ASSURANCE

A. Manufacturer Qualifications: Manufacturer with not less than 5 years of experience in the successful production and in-service performance of products and systems similar to scope of this Project.

B. Installer Qualifications:

1. Experience: Installer's personnel with not less than 5 years of experience in the successful performance of Work similar to scope of this Project.
2. Supervision: Installer shall maintain a competent supervisor at Project while the Work is in progress, and who has not less than 5 years of experience installing products and systems similar to scope of this Project.

C. Welding Qualifications: Qualify procedures and personnel according to following:

1. AWS D1.1/D1.1M, "Structural Welding Code - Steel".
2. AWS D1.3/D1.3M, "Structural Welding Code - Sheet Steel".

1.6 PRE-INSTALLATION CONFERENCE

A. Pre-Installation Conference: Before Work begins, conduct conference at Project site.

1.7 PROJECT CONDITIONS

A. Field Measurements: Where products and systems are indicated to fit walls and other construction, verify dimensions by field measurements before fabrication.

1.8 COORDINATION

A. Coordinate installation of products and systems with interfacing and adjoining construction to provide a successful installation without failure.

B. Coordinate installation of anchorages for metal fabrications. Furnish setting drawings, templates, and directions for installing anchorages, including sleeves, concrete inserts, anchor bolts, and items with integral anchors that are to be embedded in concrete or masonry. Deliver such items to Project site in time for installation.

PART 2 - PRODUCTS

2.1 MANUFACTURERS AND PRODUCTS

A. Acceptable Manufacturers and Products: Subject to compliance with requirements of Contract Documents as judged by the Architect, provide product by one of manufacturers listed. If not listed, submit as substitution according to the Conditions of the Contract and Division 01 Section "Substitution Procedures".

B. Basis of Design (Product Standard): Contract Documents are based on products and systems specified to establish a standard of quality. Other available manufacturers/fabricators offering products having equivalent characteristics may be considered, provided deviations are minor and comply with requirements of Contract Documents as judged by the Architect.

2.2 MATERIALS, GENERAL

A. Single Source Responsibility: Furnish each type of product from single manufacturer/fabricator. Provide secondary materials only as recommended by manufacturer/fabricator of primary materials.

2.3 FERROUS METAL MATERIALS

A. Metal Surfaces, General: Provide materials with smooth surfaces, without seam marks, roller marks, rolled trade names, stains, discolorations, blemishes, or other imperfections where exposed to view on finished units. Do not use steel sheet with variations in flatness exceeding those permitted by referenced standards for stretcher-leveled sheet.

B. Steel:

1. Steel Plates, Shapes, and Bars: ASTM A 36/A 36M.
2. Steel Tubing: ASTM A 500, cold-formed steel tubing.
3. Steel Pipe: ASTM A 53/A 53M, standard weight (Schedule 40) unless another weight is indicated or required by structural loads.
4. Rolled-Steel Floor Plate: ASTM A 786/A 786M, rolled from plate complying with ASTM A 36/A 36M or ASTM A 283/A 283M, Grade C or D.
5. Finish:

    a. Unprotected Areas: Galvanized metal.
    b. Protected Areas: Uncoated ferrous metal.

2.4 NON-FERROUS METAL MATERIALS

A. Aluminum Plate and Sheet: ASTM B 209/B 209M, Alloy 6061-T6.

B. Aluminum Extrusions: ASTM B 221/B 221M, Alloy 6063-T6.

C. Aluminum-Alloy Rolled Tread Plate: ASTM B 632/B 632M, Alloy 6061-T6.

D. Aluminum Castings: ASTM B 26/B 26M, Alloy 443.0-F.

2.5 FASTENERS

A. Fastener Type and Material: Select fasteners for type, grade, and class required to produce connections suitable for anchoring fabrications to other types of construction indicated.

B. Steel Bolts and Nuts: Regular hexagon-head bolts, ASTM A 307/F 568M, Grade A/ ASTM F 568M, Property Class 4.6; with hex nuts, ASTM A 563/A 563M; and, where indicated, flat washers.

C. Stainless Steel Bolts and Nuts: Regular hexagon-head annealed stainless-steel bolts, ASTM F 593/F 738M; with hex nuts, ASTM F 594/F 836M; and, where indicated, flat washers; and as follows:

1. Protected Areas:

    a. Alloy Group 1 (A1) for Type 304.

2. Unprotected Areas:

    a. Alloy Group 1 (A1) for Type 304.
    b. ~~Alloy Group 2 (A4) for Type 316~~.

D. Anchor Bolts: ASTM F 1554, Grade 36, of dimensions indicated; with nuts, ASTM A 563/ A 563M; and, where indicated, flat washers. Hot-dip galvanize or provide mechanically deposited, zinc coating where item being fastened is indicated to be galvanized.

E. Plain Washers: Round carbon steel, ASME B18.22.1/ASME B18.22M.

F. Lock Washers: Helical, spring type carbon steel, ASME B18.21.1/ASME B18.21.2M.

G. Eyebolts: ASTM A 489.

H. Machine Screws: ASME B18.6.3/B18.6.7M.

I. Lag Screws: ASME B18.2.1/B18.2.3.8M.

J. Wood Screws: ASME B18.6.1, flat head, carbon steel.

2.6 ANCHORS

A. General: Provide anchors capable of sustaining, without failure, a load equal to 6 times load imposed when installed in unit masonry and 4 times load imposed when installed in concrete, as determined by testing according to ASTM E 488, conducted by a qualified independent testing agency.

B. Cast-in-Place Anchors in Concrete: Bolts, washers, and shims as needed, either threaded type or wedge type unless otherwise indicated; galvanized ferrous castings, either ASTM A 47/A 47M malleable iron or ASTM A 27/A 27M cast steel; hot-dip galvanized according to ASTM F 2329.

C. Post-Installed Anchors: Torque-controlled expansion anchors or chemical anchors.

1. Protected Areas:

    a. Steel: Carbon steel components zinc plated to comply with ASTM B 633 or ASTM F 1941/F1941M, Class Fe/Zn 5, unless otherwise indicated.
    b. Stainless Steel: Regular hexagon-head annealed stainless-steel bolts, ASTM F 593/F 738M; with hex nuts, ASTM F 594/F 836M; and, where indicated, flat washers; Alloy Group 1 (A1) for Type 304.
    c. Locations: Where specified or where indicated on drawings.

2. Unprotected Areas: Stainless steel bolts, ASTM F 593/F 738M, and nuts, ASTM F 594/F 836M; and as follows:

    a. Alloy Group 1 (A1) for Type 304.

3. Post-Tensioned Concrete Locations: Anchors shall not exceed 1 in (25 mm) embedment. Obtain Structural Engineer's written approval for all proposed anchors in post-tensioned concrete prior to installation.

2.7 MANUFACTURED PRODUCTS

A. Anti-Slip Coating:

1. Description: Proprietary material and application process that forms permanent, uniform, slip resistant surface texture on metals.
2. Color: As selected from manufacturer/fabricators standard colors available.
3. Static Coefficient of Friction Characteristics: Not less than 0.6 according to ASTM D 2047.
4. Manufacturer/Fabricators:

    a. IKG Industries, Division of Harsco Corporation.
    b. SlipNOT Metal Safety Flooring, W. S. Molnar Company.

2.8 PAINT MATERIALS

A. Paint for Steel Fabrications: As specified in Division 09 Section "Painting".

B. Galvanizing Repair Paint for Steel Fabrications in Unprotected Areas: High-zinc-dust-content paint for regalvanizing welds in steel, complying with SSPC-Paint 20.

2.9 ACCESSORY ITEMS

A. Welding Rods and Bare Electrodes: Select according to AWS specifications for metal alloy welded.

B. Concrete Materials and Properties: Comply with requirements in Division 3 Section "Cast-in-Place Concrete" for normal-weight, air-entrained, ready-mix concrete with minimum 28 day compressive strength of 3000 psi (210.92 k/cm), unless otherwise indicated.

C. Non-shrink, Non-metallic Grout: Factory-packaged, non-staining, non-corrosive, non-gaseous grout complying with ASTM C 1107. Provide grout specifically recommended by manufacturer/fabricator.

2.10 FABRICATION, GENERAL

A. Fabrication Quality Standard for Fixed Ladders: In addition to standards listed elsewhere, comply with following, unless otherwise specified in this Section:

1. Standard Ladders: ANSI A14.3.
2. Elevator Pit Ladders: ASME A17.1.

B. General: Fabricate metal fabrications, including clips, brackets, and other components necessary to support and anchor fabrications to supporting structure, and to comply with requirements indicated for design, dimensions, member sizes and spacing, details, finish, and anchorage.

1. Join components by welding unless otherwise indicated.

C. Shop Assembly: Assemble items in shop to greatest extent possible to minimize field splicing and assembly. Disassemble units only as necessary for shipping and handling limitations. Use connections that maintain structural value of joined pieces.

D. Fabrication Requirements:

1. Shear and punch metals cleanly and accurately. Remove burrs and ease exposed edges to a radius of approximately 1/32 in (0.8 mm) unless otherwise indicated. Remove sharp or rough areas on exposed surfaces.
2. Cut, reinforce, drill, and tap metal fabrications as indicated to receive finish hardware, screws, and similar items.
3. Form work true to line and level with accurate angles and surfaces and straight sharp edges.
4. Form bent-metal corners to smallest radius possible without causing grain separation or otherwise impairing work.

5. Unprotected Areas:

    a. Allow for thermal movement resulting from 120 deg F (49 deg C) change (range) in ambient and 180 deg F (82 deg C) surface temperatures by preventing buckling, opening up of joints, overstressing of components, failure of connections, and other detrimental effects. Base engineering calculation on surface temperatures of materials due to both solar heat gain and nighttime-sky heat loss.
    b. Fabricate hot-dip galvanized fabrications so that field assembly will be by bolted connections and not welding.
    c. Fabricate joints exposed to weather in a manner to exclude water, or provide weep holes where water may accumulate.

E. Assembly Requirements:

1. Provide for anchorage of type indicated; coordinate with supporting structure. Fabricate and space anchoring devices to secure metal fabrications rigidly in place and to support indicated loads.
2. Form exposed connections with hairline joints, flush and smooth, using concealed fasteners where possible. Where exposed fasteners are required, use Phillips flat-head (countersunk) screws or bolts unless otherwise indicated. Locate joints where least conspicuous.
3. Where units are indicated to be cast into concrete or built into masonry, equip with integrally welded steel strap anchors, 1/4 in by 1-1/4 in (6 mm by 31 mm), with a minimum 6 in (150 mm) embedment and 2 in (50 mm) hook, not less than 8 in (200 mm) from ends and corners of units and 24 in (600 mm) on center, unless otherwise indicated.
4. Complete fabrication prior to shop painting or hot-dip galvanizing.

F. Shop-Welded Connections: Cope components at connections to provide close fit, or use fittings designed for this purpose. Weld all around at connections, including at fittings. Weld corners and seams continuously to develop full strength of member to comply with following:

1. Use materials and methods that minimize distortion and develop strength and corrosion resistance of base metals.
2. Obtain fusion without undercut or overlap.
3. Remove welding flux immediately.
4. At exposed connections, finish exposed welds and surfaces smooth and blended so no roughness shows after finishing and contour of welded surface matches that of adjacent surface.

2.11 SHELF ANGLES

A. Fabricate shelf angles from steel angles of sizes indicated and for attachment to concrete framing. Provide horizontally slotted holes to receive 3/4 in (19 mm) bolts, spaced not more than 6 in (150 mm) from ends and 24 in (600 mm) on center, unless otherwise indicated.

B. For cavity walls, provide vertical channel brackets to support angles from backup masonry and concrete. Align expansion joints in angles with indicated control and expansion joints in cavity-wall exterior wythe.

2.12 MISCELLANEOUS FRAMING AND SUPPORTS

A. General: Provide steel framing and supports that are not a part of structural framework as necessary to complete the Work.

B. Fabricate units from structural-steel shapes, plates, and bars of welded construction, unless otherwise indicated. Fabricate to sizes, shapes, and profiles indicated and as necessary to receive adjacent construction retained by framing and supports. Cut, drill, and tap units to receive hardware, hangers, and similar items.

1. Where units are indicated to be cast into concrete or built into masonry, equip with integrally welded steel strap anchors 1-1/4 in (32 mm) wide by 1/4 in (6 mm) thick by 8 in (200 mm) long at 24 in (600 mm) on center, unless otherwise indicated.

2.13 MISCELLANEOUS STEEL TRIM

A. Unless otherwise indicated, fabricate units from structural-steel shapes, plates, and bars of profiles shown with continuously welded joints, and smooth exposed edges. Miter corners and use concealed field splices where possible.

B. Provide cutouts, fittings, and anchorages as needed to coordinate assembly and installation with other work. Provide anchors, welded to trim, for embedding in concrete or masonry construction, spaced not more than 6 in (150 mm) from each end, 6 in (150 mm) from corners, and 24 in (600 mm) on center, unless otherwise indicated.

2.14 FINISHES, GENERAL

A. Finish Quality Standard: Comply with NAAMM's "Metal Finishes Manual for Architectural and Metal Products" for recommendations for applying and designating finishes.

1. Finish metal fabrications after assembly.
2. Finish exposed surfaces to remove tool and die marks and stretch lines, and to blend into surrounding surface.

2.15 STEEL FINISHES

A. Unprotected Areas:

1. Galvanized Finish: Hot-dip galvanize according to following. For surfaces to be painted, do not quench or apply post galvanizing treatments that might interfere with paint adhesion. Fill vent and drain holes that will be exposed in finished Work, unless indicated to remain as weep holes, by plugging with zinc solder and filing off smooth.

a. Steel and Iron Products: ASTM A 123.
b. Steel and Iron Hardware: ASTM A 153.

2. Cleaning: After galvanizing, thoroughly clean surfaces of grease, dirt, oil, flux, and other foreign matter, and treat with etching cleaner.

B. Protected Areas:

1. Shop Priming: Comply with Division 09 Section "Painting" and as follows:

a. Preparation of Uncoated Surfaces: Prepare uncoated surfaces to comply with requirements of coating product to be used, but not less than minimum requirements of SSPC-SP 6/NACE No. 3 surface preparation specifications and environmental exposure conditions of installed fabrications.
b. Application: SSPC-PA 1; apply shop primer to uncoated surfaces. Stripe paint corners, crevices, bolts, welds, and sharp edges.

C. Field-Applied Coatings: As specified in Division 09 Section "Painting". Paint all steel fabrications unless noted otherwise.

PART 3 - EXECUTION

3.1 EXAMINATION

A. Acceptance of Surfaces and Conditions: Examine substrates to receive metal fabrications and associated Work for compliance with requirements and other conditions affecting performance. Proceed only when unsatisfactory conditions have been corrected in a manner complying with Contract Documents. Starting Work within a particular area will be construed as acceptance of surface conditions.

3.2 INSTALLATION, GENERAL

A. Installation Quality Standards: In addition to standards listed elsewhere, perform Work according to following, unless otherwise specified:

1. Respective manufacturer/fabricator's written installation instructions.
2. Accepted submittals.
3. Contract Documents.

B. Control of Corrosion: Prevent galvanic action and other forms of corrosion by isolating metals and other materials from direct contact with incompatible materials.

3.3 PREPARATION

A. General: Comply with manufacturer/fabricator's instructions, recommendations, and specifications for cleaning and surface preparation. Surfaces shall have no defects, contaminants, or errors which would result in poor or potentially defective installation or would cause latent defects in Work.

3.4 INSTALLATION OF METAL FABRICATIONS

A. Fastening to In-Place Construction: Provide anchorage devices and fasteners where necessary for securing metal fabrications to in-place construction. Include threaded fasteners for concrete and masonry inserts, through bolts, lag bolts, and other connectors.

B. Cutting, Fitting, and Placement: Perform cutting, drilling, and fitting required for installing metal fabrications. Set accurately in location, alignment, and elevation; with edges and surfaces level, plumb, true, and free of rack; and measured from established lines and levels.

C. Connections at Unprotected Areas: Fit exposed connections accurately together to form hairline joints. Weld connections that are not to be left as exposed joints but cannot be shop welded because of shipping size limitations. Do not weld, cut, or abrade surfaces of units that have been coated or finished after fabrication and are intended for bolted or screwed field connections or other means without further cutting or fitting.

D. Field Welding: Weld connections continuously to develop full strength of member to comply with following requirements:

1. Use materials and methods that minimize distortion and develop strength and corrosion resistance of base metals.
2. Obtain fusion without undercut or overlap.
3. Remove flux immediately.
4. At exposed connections, finish exposed welds and surfaces smooth and blended so no roughness shows after finishing and contour of welded surface matches that of adjacent surface.

E. Corrosion Protection: Coat concealed aluminum surfaces that will come into contact with grout, concrete, masonry, wood, or dissimilar metals with heavy coat of bituminous paint.

3.5 INSTALLATION OF MISCELLANEOUS ITEMS

A. General: Install framing and supports to comply with requirements of items being supported, including manufacturer/fabricators' written instructions and requirements indicated on Shop Drawings.

B. Stair Nosings at Cast-in-Place Concrete Stairs: Install with anchorage system to comply with manufacturer/fabricator's written instructions. Center nosings on tread widths to within 3 in (75 mm) of ends. Align nosings flush with riser faces and level with tread surfaces.

3.6 FIELD QUALITY CONTROL

A. Manufacturer's Field Service: Manufacturer's qualified technical representative shall periodically inspect Work to ensure installation is proceeding in accordance with manufacturer's designs, recommendations, instructions, and warranty requirements. Representative shall submit written reports of each visit indicating observations, findings, and conclusions of inspection.

1. Manufacturer's Technical Representative Qualifications: Direct employee of technical services department of manufacturer with experience in providing recommendations, observations, evaluations, and problem diagnostics.

3.7 ADJUSTING AND CLEANING

A. Touch-Up Painting: Immediately after erection, clean field welds, bolted connections, and abraded areas. Paint uncoated and abraded areas with same material as used for shop painting to comply with SSPC-PA 1 for touching up shop-painted surfaces. Apply by brush or spray to provide a minimum 2.0 mil (0.05 mm) dry film thickness.

B. Galvanized Surfaces at Unprotected Areas: Clean field welds, bolted connections, and abraded areas and repair galvanizing to comply with ASTM A 780.

END OF SECTION

SECTION 05 5100

METAL STAIRS

PART 1 - GENERAL

1.1 SUMMARY – DESCRIPTION OF WORK

A. Section Includes: This Section specifies prefabricated metal stairs and railings.

B. Related Requirements:

1. Section 03 3000 - Cast-in-Place Concrete
2. Section 05 1000 - Structural Steel
3. Section 05 5000 – Metal Fabrications
4. Painting and Coating – Section 09 90 00

1.2 QUALITY ASSURANCE

A. Reference Standards:

1. ASTM International (ASTM), latest versions.
    a. ASTM A36 Standard Specification for Carbon Structural Steel.
    b. ASTM A53 Standard Specification for Pipe, Steel, Black and Hot-Dipped, Zinc-Coated, Welded and Seamless.
    c. ASTM A500 Standard Specification for Cold-Formed Welded and Seamless Carbon Steel Structural Tubing in Rounds and Shapes.
    d. ASTM A513 Standard Specification for Electric-Resistance-Welded Carbon and Alloy Steel Mechanical Tubing.
    e. ASTM A786 Standard Specification for Hot-Rolled Carbon, Low-Alloy, High-Strength Low-Alloy, and Alloy Steel Floor Plates.
    f. ASTM A1008 Standard Specification for Steel, Sheet, Cold-Rolled, Carbon, Structural, High-Strength Low-Alloy, High-Strength Low-Alloy with Improved Formability, Solution Hardened, and Bake Hardenable.
    g. ASTM A1011 Standard Specification for Steel, Sheet and Strip, Hot-Rolled, Carbon, Structural, High-Strength Low-Alloy, High-Strength Low-Alloy with Improved Formability, and Ultra-High Strength.
2. American Welding Society (AWS):
    a. AWS D1.1 Structural Welding Code - Steel.
    b. AWS D1.3 Structural Welding Code - Sheet Steel.

3. American National Standards Institute (ANSI):

   a. ANSI A117.1 Accessible and Usable Buildings and Facilities Standards.

4. The Society for Protective Coatings (SSPC):

   a. SSPC-SP3 Power Tool Cleaning.

1.3 ADMINISTRATIVE REQUIREMENTS

A. Coordination: Coordinate work of this Section with work of other trades for proper time and sequence to avoid construction delays. Comply with Section 01 31 00 - Project Management and Coordination, if applicable.

B. Sequencing: Sequence work of this section in accordance with Section [01 12 16 - Work Sequence and manufacturer's written recommendations for sequencing construction operations] if applicable.

C. Scheduling: Schedule work of this Section in accordance with Section 01 3200 – Construction Progress Documentation, if applicable.

1.4 ACTION SUBMITTALS

A. General: Submit listed submittals in accordance with Contract Conditions and Section 01 3300 - Submittal Procedures.

B. Product Data: Submit specified products as follows:

1. Manufacturer's product data.

2. Manufacturer's installation instructions.

C. Shop Drawings: Indicate information on shop drawings as follows:

1. Stair plans, elevations, details, methods of installation and anchoring.

   a. Show members, sizes and thickness, anchorage locations and accessory items.

   b. Furnish setting diagrams for anchorage installation as required.

   c. Include calculations stamped by a structural engineer registered in the jurisdiction in which the project is located.

D. Samples: Submit as follows:

1. Two samples, minimum size 6 inches (152 mm) square, representing actual product, finish and patterns for each finished tread product specified.

1.5 INFORMATION SUBMITTALS

A. General: Submit listed submittals in accordance with Contract Conditions and Section 01 3300 - Submittal Procedures.

B. Manufacturer's Instructions: Submit manufacturer's storage and installation instructions.

C. Source Quality Control: Submit documentation verifying that components and materials specified in this Section are from single manufacturer.

D. Qualification Statements:

1. Submit certificate verification that manufacturer is American Institute of Steel Construction (AISC) Certified for Standard Steel Building Structures.

2. Submit letter of verification for Installer's Qualifications.

1.6 QUALITY ASSURANCE

A. Qualifications:

1. Manufacturer:

a. American Institute of Steel Construction (AISC) Certified firm having 10 years experience manufacturing components similar to or exceeding requirements specified in scope of project.

b. Having sufficient capacity to produce and deliver required materials without causing delay in work.

2. Installer: Acceptable to manufacturer.

1.7 DELIVERY, STORAGE & HANDLING

A. Delivery and Acceptance Requirements:

1. Deliver material in accordance with Section 01 6000 - Product Requirements and in accordance with manufacturer's written instructions.

2. Deliver materials in manufacturer's original packaging with identification labels intact and in sizes to suit project.

B. Storage and Handling Requirements:

1. Store materials protected from exposure to harmful weather conditions and at temperatures recommended by manufacturer.

C. Packaging Waste Management:

1. Separate waste materials for reuse and recycling in accordance with Section 01 7419 - Construction Waste Management and Disposal.

2. Remove packaging materials from site and dispose of at appropriate recycling facilities.

3. Collect and separate for disposal paper, plastic, polystyrene, corrugated cardboard, packaging material in appropriate onsite bins for recycling.

4. Fold metal and plastic banding; flatten and place in designated area for recycling.

5. Remove:

a. Pallets from site and return to supplier or manufacturer.

PART 2 - PRODUCTS

2.1 METAL STAIRS

1. Single Source Responsibility: Provide components and materials specified in this section from a single American Institute of Steel Construction (AISC) Certified manufacturer.

2. Substitution Limitations:

   a. Substitutions: In accordance with Section 01 2500 - Substitution Procedures.

B. Description:

1. Sustainability Characteristics:

   a. In accordance with general project requirements.

2. Compatibility:

   a. Ensure components and materials are compatible with specified accessories and adjacent materials.

C. Design Criteria:

1. Structural Performance of Stairs: Stairs shall withstand the following structural loads without exceeding the allowable design working stress of materials, including anchors and connections. Apply each load to produce the maximum stress in each component:

   a. Treads and Platforms of Metal Stairs: Capable of withstanding a uniform load of 100 psf (4.8 kN/m^2) and concentrated load of 300 lbf (1.33 kN) applied on an area of 4 square inches (2581 square mm). Concentrated and uniform loads need not be assumed to act concurrently.

   b. Stair Framing: Capable of withstanding stresses resulting from loads specified, in addition to stresses resulting from railing system loads.

   c. Limit Deflection of Treads, Platforms and Framing Members: To L/240.

2. Structural Performance of Handrails and Railings: Handrails and railings shall withstand the following structural loads without exceeding the allowable design working stress of materials, including handrails, railings, anchors and connections.

   a. Top Rail of Guardrail: Capable of withstanding a concentrated load of 200 lbf (0.89 kN) applied in any direction and a uniform load of 50 psf (2.39 kN/m^2) applied in any direction. Concentrated and uniform loads need not be assumed to act concurrently.

D. Standard Stair and Rail System:

1. Manufacturer's standard prefabricated, pre-engineered straight run stair and landing system, consisting of hot rolled steel sheet stringers, risers, treads, landings, fasteners/supports and railings.

   a. Stringers:

1) Steel plate or channel with side mounted prefabricated railings.

2) Minimum thickness or gage as determined by structural design calculations, structural grade steel plate or channel.

2. Risers: Closed riser, minimum 14 gage (1.9 mm) hot rolled mild steel sheet, sloped maximum 1 1/2 inches (38.1 mm) and conforming to Americans with Disabilities Act (ADA) nosing requirements.

3. Treads: Manufacturer's standard concrete pan system, field poured. Tread pans to be minimum of 14 gage (1.9 mm), or as determined by design calculations. Pan depth 1 1/2 inches (38.1 mm). Exposed welds from the bottom side of flight assemblies will not be allowed. All welds to be from topside of tread pans as recommended by manufacturer.

4. Mid Landings: Minimum of 12 gage (2.7 mm) hot-rolled mild steel sheets, formed for a minimum 2 1/2 inches (64 mm) concrete fill, with 11 gage channel supports and bracing welded to perimeter frame at 12 inches (305 mm) on center.

5. Fasteners and Supports: Sized by the manufacturer to meet structural design criteria. If hanger rod connections are applicable to any of the landing connections, they shall be a minimum of 5/8 inch (15.9 mm) diameter steel rod, with actual size based on stair load.

6. Manufacturer's standard welded steel tube railing system complying with the following requirements:

a. Rails: 1 1/2 inches (38.1 mm) diameter x 13 gage (2.3 mm) minimum round steel tube, continuous multi-strand type, equally spaced with not more than 3 15/16 inches (100 mm) clearance between strands and with a minimum extension per code at top and bottom risers. Wrap rail continuously past space between flights to form guardrail as required by building code. Terminate rail ends with radiused returns, newel posts or safety terminations approved by local code. Provide not less than 1 1/2 inches (38.1 mm) clearing between rail and wall.

b. Rail Posts: 1 1/2 inches (38.1 mm) square x 11 gage (3 mm) tubing. Rail posts to fasten to side of plate stringers per manufacturer's shop drawings. Manufacturer to pre-weld erection aid to rail post for proper height to aid stair erector. Erection aid (setting block) to be removed and weld-ground smooth after installation.

c. Fabrication:

1) Use preformed or prefabricated bends.

2) Butt weld tee and cross intersections in tubing. Cope and weld intersections in pipe. Miter elbows.

3) Mechanically fasten internal sleeves and fittings.

4) Provide minimum 12 gage (2.7 mm) welded steel plate closures or hemispherical closure fittings on all exposed rail ends.

E. Custom Stair and Rail System:

1. Support System: Provide landing support with manufacturer's standard system. Comply with details indicated on Drawings.

    a. Hanger rod landing supports.

    b. Tube strut landing supports.

    c. Shelf angle landing supports.

    d. Knockdown (KD) landing supports.

2. Rail System: Provide rail system. Comply with details indicated on Drawings.

    a. Standard 34 inch (864 mm) height handrail system with 42 inch (1067 mm) guardrails at landings and openings.

        1) Rail Type: Full mesh panel rail, Picket style rail, 5-Line sweep rail, or Perforated panel rail, unless noted otherwise by architectural drawings.

    b. Standard 36 inch (914 mm) height handrail system with 42 inch (1067 mm) guardrails at landings and openings.

        1) Rail Type: Full mesh panel rail, Picket style rail, 6-Line sweep rail, or Perforated panel rail, unless noted otherwise by architectural drawings.

    c. Standard 42 inch (1067 mm) height guard rail system with 34 inch (864 mm) ADA Grab and with 42 inch (1067 mm) guardrails at landings and openings.

        1) Rail Type: Full mesh panel guard rail with hand rail, Picket style guard rail with handrail, 7-Line sweep guard rail with handrail, or Perforated panel guard rail with handrail, unless noted otherwise by architectural drawings.

3. Wall Handrails: Match stair handrails. Provide manufacturer's standard pressed steel wall brackets with anchors suitable for supporting construction.

4. Tread Construction: Comply with details indicated on Drawings.

    a. 1 1/2 inch (38.1 mm) pan type treads for field-poured concrete.

        1) Acceptable Material: Field-Poured Reinforced Concrete Treads.

F. Materials:

1. Steel Shapes and Plates: To ASTM A36.

2. Steel Pipe: To ASTM A53 Type E or S, Grade B.

3. Steel Tubing:

    a. Structural Use: To ASTM A500, Grade B or C.

    b. Non-Structural Use: To ASTM A513, hot rolled or coiled rolled (mill option).

4. Steel Sheet:

   a. Structural Use: To ASTM A1011 (hot rolled).

   b. Non-Structural Use: To ASTM A786, ASTM A1008.

5. Fasteners: As recommended by manufacturer.

6. Welding Rods: In accordance with AWS code and AWS filler metal specifications for material being welded.

7. Primer: HAPS-free, solvent-based, rust inhibitive primer containing less than 3.5 lb/gal (1.6 kg/L) Volatile Organic Compounds (VOC) and compatible with conventional alkyds topcoats.

G. Fabrication:

1. Use same material and finish as parts being joined. Use stainless steel between dissimilar metals and non-corrosive fasteners at exterior connections or joints.

2. Provide fasteners of sufficient strength to support connected members and loads, and to develop full strength of parts fastened or connected.

3. Construct stairs and rails with all components necessary for support and anchorage, and for a complete installation.

H. Finishes

1. Rails and Stair Components: Completely remove oil, grease, dirt, mill scale, rust, corrosion products, oxides, paint or other foreign matter from steel surface in accordance with SSPC SP3.

2. Shop Primer: Immediately after fabrication and cleaning, spray apply primer to dry film thickness recommended by the primer manufacturer, but not less than 2.0 mil thickness. Apply one coat High Solids Red Oxide Anticorrosive primer meeting SSPC-15 Paint.

2.2 ACCESSORIES

A. Anchor bolts, clip angles, hanger rods, hardware and incidental materials required for complete installation, as recommended by the manufacturer.

PART 3 - EXECUTION

3.1 EXAMINATION

A. Verification of Conditions: Verify that conditions of substrates previously installed under other sections or contracts are acceptable for product installation in accordance with manufacturer's instructions prior to metal stair and railing installation.

1. Inform Architect of unacceptable conditions immediately upon discovery.

2. Proceed with installation only after unacceptable conditions have been remedied and after receipt of written approval from Architect.

3.2 PREPARATION

A. Ensure structure or substrate is adequate to support metal stairs and railings.

3.3 INSTALLATION

A. Coordinate installation of metal stairs and railings in accordance with Section 01 7300 - Execution.

B. Coordinate metal stairs and railings work with work of other trades for proper time and sequence to avoid construction delays.

C. Install stairs, landings and handrails in accordance with manufacturer's instructions. Install square, plumb, straight and true to line and level, with neatly fitted joints and intersections.

1. Do not cut or alter structural components without written authorization.

2. Field welding and joining shall conform to AWS D1.1 and AWS D1.3.

3. Grind all exposed welds smooth and touch-up shop-primed areas with same primer as used by manufacturer.

3.4 ADJUSTING

A. Adjust components and systems for correct function and operation in accordance with manufacturer's written instructions.

3.5 CLEANING

A. Perform cleanup in accordance with Section 01 7416 - Cleaning Up (Site Maintenance).

B. Upon completion, remove surplus materials, rubbish, tools and equipment in accordance with Section 01 74 16 – Clean Up (Site Maintenance).

C. Waste Management:

1. Coordinate recycling of waste materials with Section 01 74 19 - Construction Waste Management and Disposal.

2. Collect recyclable waste and dispose of or recycle field generated construction waste created during demolition, construction or final cleaning.

3. Remove recycling containers and bins from site.

END OF SECTION

SECTION 05 5213

PIPE AND TUBE RAILINGS

PART 1 - GENERAL

1.1 SUMMARY

A. Section Includes: Pipe and tube railings and supplementary items necessary for installation.

1.2 DEFINITIONS

A. Unprotected Areas: Exterior areas directly that are exposed to the elements such as rain, snow, or ice.

B. Protected Areas: Interior and exterior areas that are not directly exposed to the elements such as rain, snow, or ice.

1.3 DELEGATED ENGINEERING REQUIREMENTS

A. Contract Documents Design Intent: Drawings and Specifications indicate design intent for products and systems and do not necessarily indicate or specify total Work required. Contract Documents shall not be construed as an engineered design; furnish and install all Work required for a complete installation.

B. Delegated Engineering Responsibility: Contractor shall employ a qualified professional engineer to provide engineering for products and systems including attachment to building structure required to meet design intent of Contract Documents.

1. Preparation of structural analysis data including engineering calculations, shop drawings and other submittals signed and sealed by the qualified professional engineer.

C. Delegated Engineering Professional Qualifications: Professional engineer legally authorized to practice in jurisdiction where Project is located and experienced in providing engineering services of kind indicated for products and systems similar to this Project and has a record of successful in-service performance.

D. Coordination of Work:

1. Product Variations: In the event of minor differences between products and systems of acceptable or available manufacturers, Contractor shall notify Architect of such differences and resolve conflicts in a timely manner. Failure of Contractor to provide notification shall be construed as acceptance of conditions indicated, and changes caused by minor differences between products and Contract Documents shall be included in the Work at no additional cost to Owner.

2. Allowable Adjustments: Minor dimension and profile adjustments may be made in interest of fabrication or erection methods or techniques or ability to satisfy design intent, provided design intent is maintained as determined by Architect. Proposed deviations shall include a detailed analysis of impact to adjacent substrates or other building systems, including related design or construction cost impacts. If accepted by Architect, deviations causing changes in materials, constructability, substrates, or conditions shall be included in the Work at no additional cost to Owner.

1.4 ACTION SUBMITTALS

A. Product Data: Manufacturer/fabricator's technical literature for each product and system indicated.

1. Include manufacturer/fabricator's specifications for materials, finishes, construction details, installation instructions, and recommendations for maintenance.

B. Shop Drawings: Show details of fabrication and installation, including plans, elevations, sections, details of components and attachments to other work. Distinguish between shop and field-assembled work.

1. For installed products indicated to comply with design loads, include shop drawings and structural analysis data signed and sealed by the qualified professional engineer responsible for their preparation.

C. Welding Certifications: Certificates for welding procedures and personnel.

1.5 INFORMATIONAL SUBMITTALS

A. Delegated Engineering Calculations: Informational submittal for products indicated to comply with design loads, include structural analysis data signed and sealed by the qualified professional engineer responsible for their preparation; test reports are not acceptable substitute for calculations.

B. Product Test Reports: Written reports based on evaluation of comprehensive tests performed by qualified testing agency indicating that each product complies with requirements.

C. Field Quality Control Reports: Written report of testing and inspection required by "Field Quality Control".

D. Manufacturer/Fabricator's Project Acceptance Document: Certification by the manufacturer/fabricator that its product(s) are approved, acceptable, suitable for use in specific locations, for specific details, and for applications indicated, specified, or required.

E. Qualification Data:

1. For firms and persons specified in "Quality Assurance" to demonstrate their capabilities and experience. Include list of completed projects.

1.6 QUALITY ASSURANCE

A. Manufacturer Qualifications: Manufacturer with not less than 5 years of experience in the successful production and in-service performance of products and systems similar to scope of this Project.

B. Installer Qualifications:

1. Experience: Installer's personnel with not less than 5 years of experience in the successful performance of Work similar to scope of this Project.
2. Supervision: Installer shall maintain a competent supervisor at Project while the Work is in progress, and who has not less than 5 years of experience installing products and systems similar to scope of this Project.

C. Welding Qualifications: Qualify procedures and personnel according to the following:

1. AWS D1.1/D1.1M, "Structural Welding Code - Steel."
2. AWS D1.2/D1.2M, "Structural Welding Code - Aluminum."

1.7 PRE-INSTALLATION CONFERENCE

A. Pre-Installation Conference: Before Work begins, conduct conference at Project site.

1.8 PROJECT CONDITIONS

A. Field Measurements: Where products and systems are indicated to fit walls and other construction, verify dimensions by field measurements before fabrication.

1.9 COORDINATION

A. Coordinate installation of products and systems with interfacing and adjoining construction to provide a successful installation without failure.

B. Coordinate installation of anchorages for railings. Furnish setting drawings, templates, and directions for installing anchorages, including sleeves, concrete inserts, anchor bolts, and items with integral anchors that are to be embedded in concrete or masonry. Deliver such items to Project site in time for installation.

PART 2 - PRODUCTS

2.1 MATERIALS, GENERAL

A. Single Source Responsibility: Furnish each type of product from single manufacturer. Provide secondary materials only as recommended by manufacturer of primary materials.

2.2 PERFORMANCE REQUIREMENTS

A. General Performance: Engineer products and systems to withstand loads within limits of allowable working stresses of the materials involved under conditions indicated and without permanent deformation or failure of materials.

B. Design Loads: Engineer to withstand design loads including, but not limited to, gravity, wind, seismic, and erection design loads and thermal movements established by authorities having jurisdiction, applicable local building codes, and as indicated.

1. Structural Movement: Engineer to withstand movements of structure including, but not limited to, drift, twist, column shortening, long-term creep and deflection from uniformly distributed and concentrated live loads. Contractor shall obtain required design data and identify movements accommodated on submittal drawings.
2. In engineering railings to withstand structural loads indicated, determine allowable design working stresses of railing materials based on the following:

    a. Steel: 72 percent of minimum yield strength.
    b. Aluminum: The lesser of minimum yield strength divided by 1.65 or minimum ultimate tensile strength divided by 1.95.

C. Structural Performance: Railings shall withstand the effects of gravity loads and the following loads and stresses within limits and under conditions indicated:

1. Handrails and Top Rails of Guards:

    a. Uniform load of 50 lbf/ft. (0.73 kN/m) applied in any direction.
    b. Concentrated load of 200 lbf (0.89 kN) applied in any direction.
    c. Uniform and concentrated loads need not be assumed to act concurrently.

2. Infill of Guards:

    a. Concentrated load of 50 lbf (0.22 kN) applied horizontally on an area of 1 sf (0.093 sm).
    b. Infill load and other loads need not be assumed to act concurrently.

D. Thermal Movements at Exterior (Unprotected or Protected Areas): Engineer products and systems to accommodate thermal movements of supporting elements resulting from the following maximum change (range) in ambient and surface temperatures without buckling, damaging stresses, damaging loads on fasteners, failure of operating units to function properly, and other detrimental effects.

1. Temperature Change: 120 deg F (49 deg C), ambient; 180 deg F (82 deg C), material surfaces.

E. Dimensional Tolerances: Engineer products and systems to accommodate dimensional tolerances of framing members and adjacent construction.

2.3 FERROUS METAL MATERIALS

A. Metal Surfaces, General: Provide materials with smooth surfaces, without seam marks, roller marks, rolled trade names, stains, discolorations, blemishes, or other imperfections where exposed to view on finished units. Do not use steel sheet with variations in flatness exceeding those permitted by referenced standards for stretcher-leveled sheet. Unless indicated otherwise, provide the following:

1. Unprotected Areas: Galvanized metal.
2. Protected Areas: Uncoated ferrous metal.

B. Steel Plates, Shapes, and Bars: ASTM A 36/A 36M.

C. Steel Tubing: ASTM A 500 (cold formed) or ASTM A 513.

D. Steel Pipe: ASTM A 53/A 53M, Type F or Type S, Grade A, Standard Weight (Schedule 40), unless another grade and weight are required by structural loads.

E. Cast Iron: Either gray iron, ASTM A 48/A 48M, or malleable iron, ASTM A 47/A 47M, unless otherwise indicated.

2.4 NON-FERROUS METAL MATERIALS

A. Aluminum Plate and Sheet: ASTM B 209/B 209M, Alloy 6061-T6.

B. Aluminum Extrusions: ASTM B 221/B 221M, Alloy 6063-T6.

C. Aluminum-Alloy Rolled Tread Plate: ASTM B 632/B 632M, Alloy 6061-T6.

D. Aluminum Castings: ASTM B 26/B 26M, Alloy 443.0-F.

2.5 FASTENERS

A. General: Provide the following:

1. Steel Pipe and Tube Railings at Protected Areas: Plated steel fasteners complying with ASTM B 633 or ASTM F 1941 / F 1941M), Class Fe/Zn 5 for zinc coating.
2. Steel Pipe and Tube Railings at Unprotected Areas: Hot-dip zinc-coated steel fasteners complying with ASTM A 153/A 153M or ASTM F 2329 for zinc coating; or stainless steel of the following type:

    a. Type 304.
    b. Type 316.

3. Aluminum Pipe and Tube Railings at Protected and Unprotected Areas: stainless-steel fasteners of the following type:

    a. Type 304.
    b. Type 316.

B. Fasteners for Anchoring Railings to Other Construction: Select fasteners of type, grade, and class required to produce connections suitable for anchoring railings to other types of construction indicated and capable of withstanding design loads.

2.6 ANCHORS

A. General: Provide anchors capable of sustaining, without failure, a load equal to 6 times load imposed when installed in unit masonry and 4 times load imposed when installed in concrete, as determined by testing according to ASTM E 488, conducted by a qualified independent testing agency.

B. Cast-in-Place Anchors in Concrete: Bolts, washers, and shims as needed, either threaded type or wedge type unless otherwise indicated; galvanized ferrous castings, either ASTM A 47/A 47M malleable iron or ASTM A 27/A 27M cast steel; hot-dip galvanized according to ASTM F 2329.

C. Post-Installed Anchors: Torque-controlled expansion anchors or chemical anchors.

1. Protected Areas: Carbon steel components zinc plated to comply with ASTM B 633 or ASTM F 1941/F 1941M, Class Fe/Zn 5, unless otherwise indicated.
2. Unprotected Areas: Stainless steel bolts, ASTM F 593/F 738M, and nuts, ASTM F 594/F 836M; and as follows:

    a. Alloy Group 1 (A1) for Type 304.
    b. Alloy Group 2 (A4) for Type 316.

3. Post-Tensioned Concrete Locations: Anchors shall not exceed 1 in (25 mm) embedment. Obtain Structural Engineer's written approval for all proposed anchors in post-tensioned concrete prior to installation.

2.7 PAINT MATERIALS

A. Paint for Steel Pipe and Tube Railings: As specified in Division 09 Section "Painting".

B. Galvanizing Repair Paint for Steel Pipe and Tube Railings at Unprotected Areas: High-zinc-dust-content paint for regalvanizing welds in steel, complying with SSPC-Paint 20.

C. Bituminous Paint for Aluminum Pipe and Tube Railings: ASTM D 1187, cold-applied asphalt emulsion.

2.8 ACCESSORY ITEMS

A. Welding Rods and Bare Electrodes: Select according to AWS specifications for metal alloy welded.

B. Fittings, Brackets, Fasteners, and Sleeves: Cast or formed metal of same type of material and finish as supported rails unless otherwise indicated.

C. Non-shrink, Non-metallic Grout: Factory-packaged, non-staining, non-corrosive, non-gaseous grout complying with ASTM C 1107. Provide grout specifically recommended by manufacturer/fabricator.

2.9 FABRICATION, GENERAL

A. Fabrication Quality Standard: NAAMM AMP 521 for steel framed railings.

B. General: Fabricate railings, including clips, brackets, and other components necessary to support and anchor railings to supporting structure, and to comply with requirements indicated for design, dimensions, member sizes and spacing, details, finish, and anchorage**,** but not less than that required to support structural loads.

1. Join components by welding unless otherwise indicated.

C. Shop Assembly: Assemble railings in shop to greatest extent possible to minimize field splicing and assembly. Disassemble units only as necessary for shipping and handling limitations. Use connections that maintain structural value of joined pieces.

D. Fabrication Requirements:

1. Cut, drill, and punch cleanly and accurately. Remove burrs and ease edges to a radius of approximately 1/32 in (0.8 mm) unless otherwise indicated. Remove sharp or rough areas on exposed surfaces.
2. Cut, reinforce, drill, and tap as indicated to receive finish hardware, screws, and similar items.
3. Form work true to line and level with accurate angles and surfaces.
4. Form changes in direction by bending or by inserting prefabricated elbow fittings.
5. Bend members in jigs to produce uniform curvature for each configuration required; maintain cross section of member throughout entire bend without buckling, twisting, cracking, or otherwise deforming exposed surfaces of components.
6. Close exposed ends of railing members with prefabricated end fittings.
7. Provide wall returns at ends of wall-mounted handrails unless otherwise indicated. Close ends of returns unless clearance between end of rail and wall is 1/4 in (6 mm) or less.
8. Unprotected Areas:

    a. Form exposed connections with hairline joints, flush and smooth, using concealed fasteners where possible. Where exposed fasteners are required, use Phillips flat-head (countersunk) screws or bolts unless otherwise indicated. Locate joints where least conspicuous.
    b. Fabricate hot-dip galvanized fabrications so that field assembly will be by bolted connections and not welding.
    c. Fabricate connections that will be exposed to weather in a manner to exclude water. Provide weep holes where water may accumulate.

E. Shop-Welded Connections: Cope components at connections to provide close fit, or use fittings designed for this purpose. Weld all around at connections, including at fittings.

1. Use materials and methods that minimize distortion and develop strength and corrosion resistance of base metals.
2. Obtain fusion without undercut or overlap.
3. Remove welding flux immediately.
4. At exposed connections, finish exposed welds and surfaces smooth and blended so no roughness shows after finishing and welded surface matches contours of adjacent surfaces.

F. Brackets, Flanges, Fittings, and Anchors:

1. Provide wall brackets, flanges, miscellaneous fittings, and anchors to interconnect railing members to other work unless otherwise indicated.
2. Provide inserts and other anchorage devices for connecting railings to concrete or masonry work. Fabricate anchorage devices capable of withstanding loads imposed by railings. Coordinate anchorage devices with supporting structure.
3. Interior Railings Supported from Plaster or Gypsum Board Walls: At brackets and fittings fastened to plaster or gypsum board partitions, provide crush-resistant fillers, or other means to transfer loads through wall finishes to structural supports and prevent bracket or fitting rotation and crushing of substrate.

G. Fixed Railing Posts: If not coring concrete for railing posts to be set in concrete, provide stainless steel sleeves not less than 6 in (150 mm) long with inside dimensions not less than 1/2 in (12 mm) greater than outside dimensions of post, with metal plate forming bottom closure.

H. Removable Railing Posts: Fabricate slip-fit sockets from stainless steel tube or pipe whose interior diameter is sized for a close fit with posts; limit movement of post without lateral load, measured at top, to not more than 1/40 of post height. Provide socket covers designed and fabricated to resist being dislodged.

I. Gates: Form gates from steel tube of same size and shape as top rails, with infill to match guards. Provide with cam-type, self-closing hinges for fastening to wall and overlapping stop with rubber bumper to prevent gate from opening in direction opposite egress.

2.10 FINISHES, GENERAL

A. General Finish Quality Standard: NAAMM's "Metal Finishes Manual for Architectural and Metal Products" for recommendations for applying and designating finishes.

1. Finish fabrications after assembly.
2. Finish exposed surfaces to remove tool and die marks and stretch lines, and to blend into surrounding surface.

2.11 STEEL AND IRON FINISHES

A. Unprotected Areas:

1. Galvanized Finish: Hot-dip galvanize according to following. For surfaces to be painted, do not quench or apply post galvanizing treatments that might interfere with paint adhesion. Fill vent and drain holes that will be exposed in finished Work, unless indicated to remain as weep holes, by plugging with zinc solder and filing off smooth.

   a. Steel and Iron Products: ASTM A 123.
   b. Steel and Iron Hardware: ASTM A 153.

2. Cleaning: After galvanizing, thoroughly clean surfaces of grease, dirt, oil, flux, and other foreign matter, and treat with etching cleaner.

B. Protected Areas:

1. Shop Priming: Comply with Division 09 Section “Painting” and as follows:

   a. Preparation of Uncoated Surfaces: Prepare uncoated surfaces to comply with requirements of coating product to be used, but not less than minimum requirements of SSPC-SP 6/NACE No. 3 surface preparation specifications and environmental exposure conditions of installed fabrications.
   b. Application: SSPC-PA 1; apply shop primer to uncoated surfaces. Stripe paint corners, crevices, bolts, welds, and sharp edges.

C. Field-Applied Coatings: As specified in Division 09 Section “Painting”. Paint all steel pipe and tube railings unless noted otherwise.

2.12 ALUMINUM FINISHES

A. Finish designations prefixed by AA comply with the system established by the Aluminum Association for designating aluminum finishes.

B. Mechanical Finish: AA-M12 (Mechanical Finish: nonspecular as fabricated).

C. Clear Anodic Finish:

a. Unprotected Areas: AAMA 611, AA-M12C22A41, Class I, 0.018 mm or thicker.
b. Protected Areas: AAMA 611, AA-M12C22A31, Class II, 0.010 mm or thicker.

D. Color Anodic Finish:

a. Unprotected Areas: AAMA 611, AA-M12C22A42/A44, Class I, 0.018 mm or thicker.

1) Color: Light bronze.
2) Color: Medium bronze.
3) Color: Dark bronze.
4) Color: Black.
5) Color: Match Architect's sample.

b. Protected Areas: AAMA 611, AA-M12C22A32/A34, Class II, 0.010 mm or thicker.

1) Color: Light bronze.
2) Color: Medium bronze.
3) Color: Dark bronze.
4) Color: Black.
5) Color: Match Architect's sample.

E. Baked-Enamel or Powder-Coat Finish for Protected Areas: AAMA 2603 except with a minimum dry film thickness of 1.5 mils (0.04 mm). Comply with coating manufacturer's written instructions for cleaning, conversion coating, and applying and baking finish.

1. Color and Gloss: As scheduled or as indicated in Design Selections.
2. Color and Gloss: Match Architect's sample.

F. High-Performance Organic Finish for Unprotected Areas: Two-coat fluoropolymer finish complying with AAMA 2605 and containing not less than 70 percent PVDF resin by weight in color coat. Prepare, pretreat, and apply coating to exposed metal surfaces to comply with coating and resin manufacturers' written instructions.

1. Color and Gloss: As scheduled or as indicated in Design Selections.
2. Color and Gloss: Match Architect's sample.

G. High-Performance Organic Finish for Unprotected Areas: Three-coat fluoropolymer finish complying with AAMA 2605 and containing not less than 70 percent PVDF resin by weight in both color coat and clear topcoat. Prepare, pretreat, and apply coating to exposed metal surfaces to comply with coating and resin manufacturers' written instructions.

1. Color and Gloss: As scheduled or as indicated in Design Selections
2. Color and Gloss: Match Architect's sample.

PART 3 - EXECUTION

3.1 EXAMINATION

A. Acceptance of Surfaces and Conditions: Examine substrates to receive products and systems and associated work for compliance with requirements and other conditions affecting performance. Proceed only when unsatisfactory conditions have been corrected in a manner complying with Contract Documents. Starting work within a particular area will be construed as acceptance of surface conditions.

1. Examine plaster and gypsum board assemblies, where reinforced to receive anchors, to verify that locations of concealed reinforcements have been clearly marked for Installer. Locate reinforcements and mark locations if not already done.

3.2 INSTALLATION, GENERAL

A. Installation Quality Standards: In addition to standards listed elsewhere, perform Work according to following, unless otherwise specified:

1. Respective manufacturer/fabricator's written installation instructions.
2. Accepted submittals.
3. Contract Documents.

B. Control of Corrosion: Prevent galvanic action and other forms of corrosion by isolating metals and other materials from direct contact with incompatible materials.

3.3 PREPARATION

A. General: Comply with manufacturer/fabricator's instructions, recommendations, and specifications for cleaning and surface preparation. Surfaces shall have no defects, contaminants, or errors, which would result in poor or potentially defective installation or would cause latent defects in Work.

3.4 INSTALLATION OF PIPE AND TUBE RAILINGS

A. Cutting, Fitting, and Placement:

1. Perform cutting, drilling, and fitting required for installing railings. Set accurately in location, alignment, and elevation; with edges and surfaces level, plumb, true, and free of rack; measured from established lines and levels and free of rack.
2. Do not weld, cut, or abrade surfaces of railing components that have been coated or finished after fabrication and that are intended for field connection by mechanical or other means without further cutting or fitting.

B. General Installation Requirements:

1. Fit exposed connections together to form tight, hairline joints.
2. Adjust railings before anchoring to ensure matching alignment at abutting joints.
3. Use anchorage devices and fasteners where necessary for securing railings and for properly transferring loads to in-place construction.
4. Aluminum Pipe and Tube Railings: Coat concealed surfaces of aluminum that will be in contact with grout, concrete, masonry, wood, or dissimilar metals, with a heavy coat of

C. Field Welding: Weld connections continuously to develop full strength of member to comply with following:

1. Use materials and methods that minimize distortion and develop strength and corrosion resistance of base metals.
2. Obtain fusion without undercut or overlap.
3. Remove welding flux immediately.
4. Weld exposed corners and seams continuously unless otherwise indicated.
5. At exposed connections, finish exposed welds and surfaces smooth and blended so no roughness shows after finishing and contour of welded surface matches that of adjacent surface.

D. Non-welded Connections for Aluminum Pipe and Tube Railings: Use mechanical or adhesive joints for permanently connecting railing components. Seal recessed holes of exposed locking screws using plastic cement filler colored to match finish of railings.

E. Expansion Joints: Install expansion joints at locations indicated but not farther apart than required to accommodate thermal movement. Provide slip-joint internal sleeve extending 2 in (50 mm) beyond joint on either side, fasten internal sleeve securely to one side, and locate joint within 6 in (150 mm) of post.

F. Anchoring Posts in Concrete:

1. Anchor posts according to one of following:

   a. Metal sleeves preset and anchored into concrete.
   b. Form or core-drill holes not less than 5 in (125 mm) deep and 3/4 in (19 mm) larger than outside diameter of post; clean holes of loose material.

2. Fill annular space between post and concrete or metal sleeves with non-shrink, non-metallic grout or anchoring cement, mixed and placed to comply with anchoring material manufacturer/fabricator's written instructions.
3. Leave anchorage joint exposed with 1/8 in (3 mm) buildup, sloped away from post.

G. Anchoring Posts onto Concrete: Attach flange to concrete using post-installed anchors in pre-drill holes, welded or attached with set screws to post.

H. Anchoring Posts onto Steel:

1. Flanges: Anchor posts to metal surfaces with oval flanges, angle type, or floor type as required by conditions, connected to posts and to metal supporting members.
2. Steel Pipe and Tube Railings: Weld flanges to post and bolt to metal supporting surfaces.
3. Aluminum Pipe and Tube Railings: Use fittings designed and engineered for this purpose.

I. Installing Removable Posts: Install in slip-fit metal sockets cast in concrete.

J. Attaching Railings to Walls: Except where end flanges are used, attach with wall brackets with 1-1/2 in (38 mm) clearance from inside face of handrail and finished wall surface. Locate brackets as indicated or, if not indicated, at spacing required to support structural loads. Secure with following devices:

1. Concrete and Solid Masonry: Post-installed anchors.
2. Hollow Masonry: Toggle bolts.
3. Gypsum Board Assemblies: Toggle bolts installed through flanges of steel framing or through concealed steel reinforcements.

K. Tolerances:

1. Posts: Set plumb within a tolerance of 1/16 in per 3 ft (1.5 mm per 900 mm).
2. Rails: Align so variations from level for horizontal members and variations from parallel with rake of steps and ramps for sloping members do not exceed 1/4 in per 12 ft (6 mm per 3.6 m).

3.5 FIELD QUALITY CONTROL

A. Manufacturer's Field Service: Manufacturer's qualified technical representative shall periodically inspect Work to ensure installation is proceeding in accordance with manufacturer's designs, recommendations, instructions, and warranty requirements. Representative shall submit written reports of each visit indicating observations, findings, and conclusions of inspection.

1. Manufacturer's Technical Representative Qualifications: Direct employee of technical services department of manufacturer with experience in providing recommendations, observations, evaluations, and problem diagnostics.

B. Testing Agency Field Service: The Owner may employ and pay a qualified independent testing agency to perform field quality control. Materials and installation failing to meet specified requirements shall be replaced at Contractor's expense. Retesting of materials and installations failing to meet specified requirements shall be done at Contractor's expense.

3.6 ADJUSTING AND CLEANING

A. Touchup Painting: Immediately after erection, clean field welds, bolted connections, and abraded areas. Paint exposed areas with same material as used for shop painting to comply with SSPC-PA 1 for touching up shop-painted surfaces. Apply by brush or spray to provide a minimum 2.0 mil (0.05 mm) dry film thickness.

B. Galvanized Surfaces at Unprotected Areas: Clean field welds, bolted connections, and abraded areas and repair galvanizing to comply with ASTM A 780.

END OF SECTION

SECTION 057000

ORNAMENTAL METAL

PART 1 - GENERAL

1.1 SUMMARY

A. Section Includes: Ornamental metal including formed metal used for general purposes and supplementary items necessary to complete their installation.

1.2 ACTION SUBMITTALS

A. Product Data: Manufacturer's technical literature for each product and system indicated.

1. Include manufacturer's specifications for materials, finishes, construction details, installation instructions, and recommendations for maintenance.

B. Shop Drawings: Show details of fabrication and installation, including plans, elevations, sections, details of components and attachments to other work. Distinguish between shop and field-assembled work.

1. Indicate materials and profiles of each ornamental formed metal member, fittings, joinery, finishes, fasteners, anchorages, and accessory items.

C. Samples for Initial Selection: For products involving selection of color, texture, or design, including mechanical finishes.

D. Samples for Verification: For each type of exposed finish required, prepared on 6 in (150 mm) square Samples of metal of same thickness and material indicated for the Work.

E. Coordination Drawings: For ornamental metal elements that house items specified in other Sections. Show dimensions of housed items, including locations of housing penetrations and attachments, and necessary clearances.

1.3 INFORMATIONAL SUBMITTALS

A. Qualification Data:

1. For firms and persons specified in "Quality Assurance" to demonstrate their capabilities and experience. Include list of completed projects.

B. Welding certificates.

1.4 CLOSEOUT SUBMITTALS

A. Maintenance Data: To include in maintenance manuals.

1.5 QUALITY ASSURANCE

A. Manufacturer Qualifications: Manufacturer with not less than 5 years of experience in the successful production and in-service performance of products and systems similar to scope of this Project.

B. Installer Qualifications:

1. Experience: Installer's personnel with not less than 5 years of experience in the successful performance of Work similar to scope of this Project.
2. Supervision: Installer shall maintain a competent supervisor at Project while the Work is in progress, and who has not less than 5 years of experience installing products and systems similar to scope of this Project.

C. Mock-ups: Prior to fabrication and installation, build mock-up for each form of construction and finish required to verify selections made under sample Submittals and to demonstrate aesthetic effects and qualities of materials and execution. Build mock-up using materials indicated for the completed Work.

1. Build mock-up in the location and of the size indicated or, if not indicated, as directed by Architect. Contractor shall provide structural support framework.

a. Show typical components, attachments to building structure, and requirements of installation.

2. Notify Architect seven days in advance of the dates and times when mock-up will be installed.
3. Obtain Architect's acceptance of mock-ups before starting fabrication or installation.
4. Acceptance of mock-ups does not constitute acceptance of deviations from the Contract Documents contained in mock-ups unless such deviations are specifically noted by Contractor and accepted by Architect in writing.
5. Demolish and remove mock-ups when directed by Architect unless accepted to become part of the completed Work.

D. Welding Qualifications: Qualify procedures and personnel according to the following:

1. AWS D1.1/D1.1M, "Structural Welding Code - Steel."
2. AWS D1.2/D1.2M, "Structural Welding Code - Aluminum."
3. AWS D1.3/D1.3M, "Structural Welding Code - Sheet Steel."
4. AWS D1.6/D1.6M, "Structural Welding Code - Stainless Steel."

1.6 PRE-INSTALLATION CONFERENCE

A. Pre-Installation Conference: Before Work begins, conduct conference at Project site.

1.7 DELIVERY, STORAGE, AND HANDLING

A. Deliver ornamental metal products wrapped in protective coverings and strapped together in suitable packs or in heavy-duty cartons. Remove protective coverings before they stain or bond to finished surfaces.

B. Store products on elevated platforms in a dry location.

1.8 PROJECT CONDITIONS

A. Field Measurements: Where products and systems are indicated to fit walls and other construction, verify dimensions by field measurements before fabrication.

1.9 COORDINATION

A. Coordinate installation of products and systems with interfacing and adjoining construction to provide a successful installation without failure.

PART 2 - PRODUCTS

2.1 MATERIALS, GENERAL

A. Single Source Responsibility: Furnish each type of product from single manufacturer. Provide secondary materials only as recommended by manufacturer of primary materials.

2.2 METALS, GENERAL

A. Metal Surfaces, General: Use materials with smooth, flat surfaces unless otherwise indicated. Use materials without seam marks, roller marks, rolled trade names, stains, discolorations, or blemishes.

2.3 ALUMINUM

A. Fabricate products from alloy and temper recommended by aluminum producer and finisher for type of use and finish indicated, and with strength and durability properties for each aluminum form required not less than that of alloy and temper designated below.

B. Bars and Shapes: ASTM B 221 (ASTM B 221M), Alloy 6063-T5/T52.

C. Pipe and Round Tubing: ASTM B 429/B 429M, Alloy 6063-T6.

D. Tubing: ASTM B 210 (ASTM B 210M), Alloy 6063-T832.

E. Plate: ASTM B 209 (ASTM B 209M), alloy and temper recommended by aluminum producer and finisher for type of use and finish indicated, and considering Alloy 3003-H14 for coating finish, Alloy 5005-H32 for anodized finish, and Alloy 6061-T6 for high strength.

F. Aluminum Sheet: Flat sheet complying with ASTM B 209 (ASTM B 209M), alloy and temper recommended by aluminum producer and finisher for type of use and finish indicated, and with not less than strength and durability properties of Alloy 5005-H32.

G. Forgings: ASTM B 247 (ASTM B 247M), Alloy 6061-T6.

H. Castings: ASTM B 26/B 26M, Alloy A356.0-T6.

2.4 STAINLESS STEEL

A. Tubing: ASTM A 554:

1. Grade: MT 304
2. Grade: MT 316 or MT 316L

B. Pipe: ASTM A 312/A 312M:

1. Grade: MT 304
2. Grade: MT 316 or MT 316L

C. Castings: ASTM A 743/A 743M:

1. Grade: Grade CF 8 or Grade CF 20
2. Grade: Grade CF 8M or Grade CF 3M

D. Strip, Plate, and Flat Bar: ASTM A 666:

1. Grade: MT 304
2. Grade: MT 316 or MT 316L

E. Stainless-Steel Sheet for Interior Items: ASTM A 240/A 240M or ASTM A 666, Type 304, stretcher-leveled standard of flatness.

F. Stainless-Steel Sheet for Exterior Items: ASTM A 240/A 240M or ASTM A 666, Type 316, stretcher-leveled standard of flatness.

G. Bars and Shapes: ASTM A 276:

1. Grade: MT 304
2. Grade: MT 316 or MT 316L

H. Wire Rope and Fittings:

1. Manufacturers:

a. Cable Connection (The).
b. Carl Stahl DecorCable, Inc.
c. Esmet, Inc.
d. Feeney, Inc.
e. Hayn Enterprises, LLC.
f. Johnson, C. Sherman, Co., Inc.
g. Loos & Co., Inc.; Cableware Division.
h. Ronstan International Inc.
i. Secosouth, Inc.

2. Wire Rope: 1-by-19 wire rope made from wire complying with ASTM A 492, Type 316.
3. Wire-Rope Fittings: Connectors of types indicated, fabricated from stainless steel, and with capability to sustain without failure a load equal to minimum breaking strength of wire rope with which they are used.

2.5 STEEL AND IRON

A. Tubing: ASTM A 500/A 500M (cold formed) or ASTM A 513, Type 5 (mandrel drawn).

B. Bars: Hot-rolled, carbon steel complying with ASTM A 29/A 29M, Grade 1010.

C. Plates, Shapes, and Bars: ASTM A 36/A 36M.

D. Cast Iron: Either gray iron, ASTM A 48/A 48M, or malleable iron, ASTM A 47/A 47M unless otherwise indicated.

E. Galvanized-Steel Sheet: ASTM A 653/A 653M, G90 (Z275) coating, either commercial steel or forming steel.

F. Steel Sheet: Uncoated, cold-rolled, ASTM A 1008/A 1008M, commercial steel, exposed or electrolytic zinc-coated, ASTM A 879/A 879M, with steel sheet substrate complying with ASTM A 1008/A 1008M, commercial steel, exposed.

2.6 MISCELLANEOUS MATERIALS

A. Welding Rods and Bare Electrodes: Select according to AWS specifications for metal alloy welded.

1. For aluminum, provide type and alloy as recommended by producer of metal to be welded and as required for color match, strength, and compatibility in fabricated items.

B. Brazing Rods: For copper alloys, provide type and alloy as recommended by producer of metal to be brazed and as required for color match, strength, and compatibility in fabricated items.

C. Sealants, Exterior: ASTM C 920; elastomeric silicone sealant; of type, grade, class, and use classifications required to seal joints in ornamental formed metal and remain weathertight; and as recommended in writing by ornamental formed metal manufacturer.

D. Sealants, Interior: Nonsag, paintable, nonstaining, latex sealant complying with ASTM C 834; of type and grade required to seal joints in ornamental formed metal; and as recommended in writing by ornamental formed metal manufacturer.

1. Sealants shall have a VOC content of not more than 250 g/L when calculated according to 40 CFR 59, Subpart D (EPA Method 24).
2. Sealants shall comply with the testing and product requirements of the California Department of Health Services' "Standard Practice for the Testing of Volatile Organic Emissions from Various Sources Using Small-Scale Environmental Chambers."

E. Fasteners: Fabricated from same basic metal and alloy as fastened metal unless otherwise indicated. Do not use metals that are incompatible with materials joined.

1. Provide concealed fasteners for interconnecting ornamental formed metal items and for attaching them to other work unless exposed fasteners are unavoidable or are the standard fastening method.
2. Provide Phillips flat-head machine screws for exposed fasteners unless otherwise indicated.

F. Nonstructural Anchors: Provide powder-actuated fasteners, metal expansion sleeve anchors, or metal-impact expansion anchors of type, size, and material necessary for type of load and installation indicated, as recommended by manufacturer, unless otherwise indicated.

G. Anchor Materials:

1. Material for Interior Locations: Carbon-steel components zinc plated to comply with ASTM B 633 or ASTM F 1941 (ASTM F 1941M), Class Fe/Zn 5, unless otherwise indicated.

2. Material for Exterior Locations and Where Stainless Steel Is Indicated: Alloy Group 1 (A1) stainless-steel bolts, ASTM F 593 (ASTM F 738M), and nuts, ASTM F 594 (ASTM F 836M).

H. Backing Materials: Provided or recommended by ornamental formed metal manufacturer.

I. Laminating Adhesive: Adhesive recommended by metal fabricator that will fully bond metal to metal and that will prevent telegraphing and oil canning and is compatible with substrate and noncombustible after curing.

1. Contact Adhesive: VOC content of not more than 80 g/L when calculated according to 40 CFR 59, Subpart D (EPA Method 24).
2. Metal-to-Metal Adhesive: VOC content of not more than 30 g/L when calculated according to 40 CFR 59, Subpart D (EPA Method 24).
3. Multipurpose Construction Adhesive: VOC content of not more than 70 g/L when calculated according to 40 CFR 59, Subpart D (EPA Method 24).
4. Special-Purpose Contact Adhesive: (Contact adhesive used to bond melamine-covered board, metal, unsupported vinyl, ultrahigh molecular weight polyethylene, and rubber or wood veneer, 1/16 in (1.5 mm) thick or less, to any surface): 250 g/L.
5. Adhesive shall comply with the testing and product requirements of the California Department of Health Services' "Standard Practice for the Testing of Volatile Organic Emissions from Various Sources Using Small-Scale Environmental Chambers."

J. Isolation Coating: Manufacturer's standard alkali-resistant coating, bituminous paint, or epoxy coating.

1. Coating shall comply with the testing and product requirements of the California Department of Health Services' "Standard Practice for the Testing of Volatile Organic Emissions from Various Sources Using Small-Scale Environmental Chambers."

2.7 PAINTS AND COATINGS

A. Low-Emitting Materials for Schools: Paints and coatings shall comply with the testing and product requirements of the California Department of Health Services' "Standard Practice for the Testing of Volatile Organic Emissions from Various Sources Using Small-Scale Environmental Chambers."

B. Etching Cleaner for Galvanized Metal: Complying with MPI#25.

C. Galvanizing Repair Paint: High-zinc-dust-content paint complying with SSPC-Paint 20 and compatible with paints specified to be used over it.

D. Lacquer for Copper Alloys: Clear, acrylic lacquer specially developed for coating copper-alloy products.

E. Shop Primers: Comply with Division 09 Section "Painting".

F. Shop Primers: Comply with Division 09 Section "High-Performance Coatings".

G. Bituminous Paint: Cold-applied asphalt emulsion complying with ASTM D 1187.

2.8 FABRICATION, GENERAL

A. Shop Assembly: Preassemble ornamental metal items in shop to greatest extent possible to minimize field splicing and assembly. Disassemble units only as necessary for shipping and handling limitations. Clearly mark units for reassembly and coordinated installation. Use connections that maintain structural value of joined pieces.

B. Make up wire-rope assemblies in the shop to field-measured dimensions with fittings machine swaged. Minimize amount of turnbuckle take-up used for dimensional adjustment so maximum amount is available for tensioning wire ropes. Tag wire-rope assemblies and fittings to identify installation locations and orientations for coordinated installation.

C. Form ornamental metal to required shapes and sizes, true to line and level with true curves and accurate angles and surfaces. Finish exposed surfaces to smooth, sharp, well-defined lines and arris.

D. Form bent-metal corners to smallest radius possible without causing grain separation or otherwise impairing the Work.

E. Form simple and compound curves in bars, pipe, tubing, and extruded shapes by bending members in jigs to produce uniform curvature for each configuration required; maintain cross section of member throughout entire bend without buckling, twisting, cracking, or otherwise deforming exposed surfaces.

F. Cut, drill, and punch metals cleanly and accurately. Remove burrs and ease edges to a radius of approximately 1/32 in (0.8 mm) unless otherwise indicated. Remove sharp or rough areas on exposed surfaces.

G. Mill joints to a tight, hairline fit. Cope or miter corner joints. Fabricate connections that will be exposed to weather in a manner to exclude water.

H. Provide weep holes where water may accumulate. Locate weep holes in inconspicuous locations.

I. Provide necessary rebates, lugs, and brackets to assemble units and to attach to other work. Cut, reinforce, drill, and tap as needed to receive finish hardware, screws, and similar items unless otherwise indicated.

J. Comply with AWS for recommended practices in shop welding and brazing. Weld and braze behind finished surfaces without distorting or discoloring exposed side. Clean exposed welded and brazed joints of flux, and dress exposed and contact surfaces.

    1. Where welding and brazing cannot be concealed behind finished surfaces, finish joints to comply with NOMMA's "Voluntary Joint Finish Standards" for Type 1 Welds: no evidence of a welded joint.

K. Provide castings that are sound and free of warp, cracks, blowholes, or other defects that impair strength or appearance. Grind, wire brush, sandblast, and buff castings to remove seams, gate marks, casting flash, and other casting marks.

L. Coordinate dimensions and attachment methods of ornamental metal items with those of adjoining construction to produce integrated assemblies with closely fitting joints and with edges and surfaces aligned unless otherwise indicated.

M. Form metal to profiles indicated, in maximum lengths to minimize joints. Produce flat, flush surfaces without cracking or grain separation at bends. Fold back exposed edges of unsupported sheet metal to form a 1/2 in (12 mm) wide hem on the concealed side, or ease edges to a radius of approximately 1/32 in (0.8 mm) and support with concealed stiffeners.

N. Increase metal thickness or reinforce with concealed stiffeners, backing materials, or both, as needed to provide surface flatness equivalent to stretcher-leveled standard of flatness and sufficient strength for indicated use.

O. Support joints with concealed stiffeners as needed to hold exposed faces of adjoining sheets in flush alignment.

P. Build in straps, plates, and brackets as needed to support and anchor fabricated items to adjoining construction. Reinforce ornamental formed metal items as needed to attach and support other construction.

Q. Provide support framing, mounting and attachment clips, splice sleeves, fasteners, and accessories needed to install ornamental formed metal items.

2.9 ORNAMENTAL WINDOW SECURITY BARS

A. General: Fabricate ornamental window grilles to designs indicated from steel bars and shapes of sizes and profiles indicated. Form steel bars by bending, forging, coping, mitering, and welding.

B. Welding: Interconnect grille members with full-length, full-penetration welds unless otherwise indicated. Use welding method that is appropriate for metal and finish indicated and that develops full strength of members joined. Finish exposed welds and surfaces smooth, flush, and blended to match adjoining surfaces.

C. Brackets, Fittings, and Anchors: Provide wall brackets, fittings, and anchors to connect ornamental window grilles to other work unless otherwise indicated.

1. Furnish inserts and other anchorage devices to connect ornamental window grilles to concrete and masonry work. Coordinate anchorage devices with supporting structure.
2. Fabricate anchorage devices that are capable of withstanding loads indicated.

2.10 METAL REVEALS

A. Fabricate metal reveals for wood paneling and/or cabinets from materials, shapes and sizes indicated on the Drawings. Anchor to provide permanent attachment to substrate using fasteners and or adhesives.

2.11 METAL BASE

A. Fabricate metal base from materials, shapes and sizes indicated on the Drawings. Anchor to provide permanent attachment to substrate using fasteners and or adhesives.

B. Form metal base from metal of type and thickness indicated below:

1. Aluminum Sheet: 0.063 in (1.60 mm).

a. Finish: As indicated in the Design Selections.

2. Stainless-Steel Sheet: 0.050 in (1.25 mm).

b. Finish: As indicated in the Design Selections.

2.12 GENERAL FINISH REQUIREMENTS

A. Comply with NAAMM's "Metal Finishes Manual for Architectural and Metal Products" for recommendations for applying and designating finishes.

B. Mechanical Finishes:

1. Complete mechanical finishes of flat sheet metal surfaces before fabrication where possible. After fabrication, finish all joints, bends, abrasions, and other surface blemishes to match sheet finish.
2. Protect mechanical finishes on exposed surfaces from damage by applying a strippable, temporary protective covering before shipping.

C. Apply organic and anodic finishes to formed metal after fabrication unless otherwise indicated.

H. Appearance of Finished Work: Variations in appearance of abutting or adjacent pieces are acceptable if they are within one-half of the range of approved Samples. Noticeable variations in the same piece are not acceptable. Variations in appearance of other components are acceptable if they are within the range of approved Samples and are assembled or installed to minimize contrast.

2.13 ALUMINUM FINISHES

A. Finish designations prefixed by AA comply with the system established by the Aluminum Association for designating aluminum finishes.

B. High-Performance Organic Finish: Two-coat fluoropolymer finish complying with AAMA 2605 and containing not less than 70 percent PVDF resin by weight in color coat. Prepare, pretreat, and apply coating to exposed metal surfaces to comply with coating and resin manufacturers' written instructions.

1. Color: As scheduled or as indicated in Design Selections.

C. High-Performance Organic Finish: Three-coat fluoropolymer finish complying with AAMA 2605 and containing not less than 70 percent PVDF resin by weight in both color coat and clear topcoat. Prepare, pretreat, and apply coating to exposed metal surfaces to comply with coating and resin manufacturers' written instructions.

1. Color: As scheduled or as indicated in Design Selections.

D. Baked-Enamel or Powder-Coat Finish: AAMA 2603 except with a minimum dry film thickness of 1.5 mils (0.04 mm). Comply with coating manufacturer's written instructions for cleaning, conversion coating, and applying and baking finish.

1. Color: As scheduled or as indicated in Design Selections.

E. Siliconized Polyester Finish: Epoxy primer and silicone-modified, polyester-enamel topcoat; with a dry film thickness of not less than 0.2 mil (0.005 mm) for primer and 0.8 mil (0.02 mm) for topcoat.

1. Color: As scheduled or as indicated in Design Selections.

F. Clear Anodic Finish for Exterior Units: AAMA 611, AA-M12C22A41, Class I, 0.018 mm or thicker.

G. Clear Anodic Finish for Interior Units: AAMA 611, AA-M12C22A31, Class II, 0.010 mm or thicker.

H. Color Anodic Finish for Exterior Units: AAMA 611, AA-M12C22A42/A44, Class I, 0.018 mm or thicker.

1. Color: As scheduled or as indicated in Design Selections.

I. Color Anodic Finish for Interior Units: AAMA 611, AA-M12C22A32/A34, Class II, 0.010 mm or thicker.

1. Color: As scheduled or as indicated in Design Selections.

2.14 GALVANIZED-STEEL FINISHES

A. Preparing Galvanized Items for Factory Priming: Thoroughly clean galvanized ornamental formed metal of grease, dirt, oil, flux, and other foreign matter, and treat with etching cleaner.

B. Preparing Galvanized Items for Factory Finishing: Clean surfaces with nonpetroleum solvent so surfaces are free of oil and other contaminants. After cleaning, apply a conversion coating suited to the organic coating to be applied over it.

C. Repairing Galvanized Surfaces: Clean welds and abraded areas and repair galvanizing to comply with ASTM A 780.

D. High-Performance Organic Finish: Two-coat fluoropolymer finish complying with AAMA 2605 and containing not less than 70 percent PVDF resin by weight in color coat. Prepare, pretreat, and apply coating to exposed metal surfaces to comply with coating and resin manufacturers' written instructions.

1. Color: As scheduled or as indicated in Design Selections.

E. High-Performance Organic Finish: Three-coat fluoropolymer finish complying with AAMA 2605 and containing not less than 70 percent PVDF resin by weight in both color coat and clear topcoat. Prepare, pretreat, and apply coating to exposed metal surfaces to comply with coating and resin manufacturers' written instructions.

1. Color: As scheduled or as indicated in Design Selections.

F. Baked-Enamel Finish: Immediately after cleaning and pretreating, apply manufacturer's standard two-coat, baked-enamel finish consisting of prime coat and thermosetting topcoat, with a minimum dry film thickness of 1 mil (0.025 mm) for topcoat. Comply with paint manufacturer's written instructions for applying and baking to achieve a minimum dry film thickness of 2 mils (0.05 mm).

1. Color: As scheduled or as indicated in Design Selections.

G. Powder-Coat Finish: Immediately after cleaning and pretreating, apply manufacturer's standard thermosetting polyester or acrylic urethane powder coating with cured-film thickness not less than 1.5 mils (0.04 mm). Prepare, treat, and coat metal to comply with resin manufacturer's written instructions.

1. Color: As scheduled or as indicated in Design Selections.

H. Siliconized-Polyester Coating: Immediately after cleaning and pretreating, apply manufacturer's standard epoxy primer and silicone-modified, polyester-enamel topcoat; with a dry film thickness of not less than 0.2 mil (0.005 mm) for primer and 0.8 mil (0.02 mm) for topcoat.

1. Color: As scheduled or as indicated in Design Selections.

I. Factory Priming for Field-Painted Finish: Where field painting after installation is indicated, apply shop primer to prepared surfaces of items unless otherwise indicated. Comply with requirements in SSPC-PA 1, "Paint Application Specification No. 1: Shop, Field, and Maintenance Painting of Steel," for shop painting.

1. Field-Applied Coatings: As specified in Division 09 Section “Painting”.
2. Field-Applied Coatings: As specified in Division 09 Section “High-Performance Coatings”.

2.15 STEEL FINISHES

A. Surface Preparation: Clean surfaces to comply with SSPC-SP 1, "Solvent Cleaning," to remove dirt, oil, grease, or other contaminants that could impair paint bond. Remove mill scale and rust, if present, from uncoated steel, complying with SSPC-SP 5/NACE No. 1, "White Metal Blast Cleaning," or with SSPC-SP 8, "Pickling."

B. Pretreatment: Immediately after cleaning, apply a conversion coating of type suited to organic coating applied over it.

C. Baked-Enamel Finish: Immediately after cleaning and pretreating, apply manufacturer's standard two-coat, baked-enamel finish consisting of prime coat and thermosetting topcoat. Comply with coating manufacturer's written instructions for applying and baking to achieve a minimum dry film thickness of 2 mils (0.05 mm).

1. Color: As scheduled or as indicated in Design Selections.

D. Powder-Coat Finish: Immediately after cleaning and pretreating, apply manufacturer's standard thermosetting polyester or acrylic urethane powder coating with cured-film thickness not less than 1.5 mils (0.04 mm). Prepare, treat, and coat metal to comply with resin manufacturer's written instructions.

1. Color: As scheduled or as indicated in Design Selections.

E. Specialty Coating for Steel (Non-Galvanized Hot-Rolled and Cold-Rolled Steel and Iron Installations): Prepare, treat, and coat non-galvanized ferrous metal with finish as indicated below.

1. Prepare uncoated ferrous-metal surfaces by thoroughly cleaning. The cleaned surfaces shall be free of rust, scale, grease, oil, paint or other foreign matter. The cleaning process shall be performed without measurable abrasion or erosion.
2. Coating shall be applied after all fabricating, machining, forming, welding, cold forming or heat treatments have been completed.
3. The process shall not result in any attack of the surface, no pitting or intergranular and shall not reduce the hardness or cause embrittlement of the steel.
4. Finish: As scheduled or indicated in Design Selections.

F. Factory Priming for Field-Painted Finish: Where field painting after installation is indicated, apply shop primer to prepared surfaces of items unless otherwise indicated. Comply with requirements in SSPC-PA 1, "Paint Application Specification No. 1: Shop, Field, and Maintenance Painting of Steel," for shop painting.

1. Field-Applied Coatings: As specified in Division 09 Section “Painting”.
2. Field-Applied Coatings: As specified in Division 09 Section “High-Performance Coatings”.

2.16 STAINLESS-STEEL FINISHES

A. Surface Preparation: Remove tool and die marks and stretch lines, or blend into finish.

B. Polished Finishes: Grind and polish surfaces to produce uniform finish, free of cross scratches.

1. Directional Finishes: Run grain of directional finishes with long dimension of each piece.

C. Bright, Cold-Rolled, Unpolished Finish: No. 2B.

D. Directional Satin Finish: No. 4.

E. Dull Satin Finish: No. 6.

F. Satin, Reflective, Directional Polish: No. 7.

G. Mirrorlike Reflective, Nondirectional Polish: No. 8 finish.

PART 3 - EXECUTION

3.1 EXAMINATION

A. Acceptance of Surfaces and Conditions: Examine substrates to receive products and systems and associated work for compliance with requirements and other conditions affecting performance. Proceed only when unsatisfactory conditions have been corrected in a manner complying with Contract Documents. Starting work within a particular area will be construed as acceptance of surface conditions.

3.2 INSTALLATION, GENERAL

A. Installation Quality Standards: In addition to standards listed elsewhere, perform Work according to following, unless otherwise specified:

1. Respective manufacturer/fabricator’s written installation instructions.

3. Accepted submittals.
4. Contract Documents.

B. Control of Corrosion: Prevent galvanic action and other forms of corrosion by isolating metals and other materials from direct contact with incompatible materials.

3.3 PREPARATION

A. General: Comply with manufacturer's instructions, recommendations, and specifications for cleaning and surface preparation. Surfaces shall have no defects, contaminants, or errors which would result in poor or potentially defective installation or would cause latent defects in Work.

3.4 INSTALLATION, ORNAMENTAL METAL

A. Locate and place ornamental metal items level and plumb and in alignment with adjacent construction. Perform cutting, drilling, and fitting required to install ornamental formed metal.

1. Do not cut or abrade finishes that cannot be completely restored in the field. Return items with such finishes to the shop for required alterations, followed by complete refinishing, or provide new units as required.

B. Use concealed anchorages where possible. Provide brass or lead washers fitted to screws where needed to protect metal surfaces and to make a weathertight connection.

C. Form tight joints with exposed connections accurately fitted together. Provide reveals and openings for sealants and joint fillers as indicated.

D. Provide anchorage devices and fasteners where needed to secure ornamental metal to in-place construction.

E. Perform cutting, drilling, and fitting required to install ornamental metal. Set products accurately in location, alignment, and elevation, measured from established lines and levels. Provide temporary bracing or anchors in formwork for items to be built into concrete, masonry, or similar construction.

F. Fit exposed connections accurately together to form tight, hairline joints or, where indicated, uniform reveals and spaces for sealants and joint fillers. Where cutting, welding, and grinding are required for proper shop fitting and jointing of ornamental metal, restore finishes to eliminate evidence of such corrective work.

G. Do not cut or abrade finishes that cannot be completely restored in the field. Return items with such finishes to the shop for required alterations, followed by complete refinishing, or provide new units as required.

H. Install concealed gaskets, joint fillers, insulation, and flashings as work progresses.

I. Restore protective coverings that have been damaged during shipment or installation. Remove protective coverings only when there is no possibility of damage from other work yet to be performed at same location.

1. Retain protective coverings intact; remove coverings simultaneously from similarly finished items to preclude non-uniform oxidation and discoloration.

I. Field Welding: Comply with applicable AWS specification for procedures of manual shielded metal arc welding and requirements for welding and for finishing welded connections in "Fabrication, General" Article. Weld connections that are not to be left as exposed joints but cannot be shop welded because of shipping size limitations.

J. Field Brazing: Comply with requirements for brazing and for finishing brazed connections in "Fabrication, General" Article. Braze connections that are not to be left as exposed joints but cannot be shop brazed because of shipping size limitations.

3.5 ADJUSTING AND CLEANING

A. Unless otherwise indicated, clean metals by washing thoroughly with clean water and soap, rinsing with clean water, and drying with soft cloths.

B. Copper Alloys: Clean copper alloys according to metal finisher's written instructions in a manner that leaves an undamaged and uniform finish matching approved Sample.

C. Touchup Painting: Immediately after erection, clean field welds, bolted connections, and abraded areas of shop paint, and paint exposed areas with the same material as used for shop painting to comply with SSPC-PA 1 for touching up shop-painted surfaces.

1. Apply by brush or spray to provide a minimum 2.0 mil (0.05 mm) dry film thickness.

D. Touchup Painting: Cleaning and touchup painting of field welds, bolted connections, and abraded areas of shop paint are specified in Division 09 Section "Painting".

E. Touchup Painting: Cleaning and touchup painting of field welds, bolted connections, and abraded areas of shop paint are specified in Division 09 Section "High-Performance Coatings".

F. Restore finishes damaged during installation and construction period so no evidence remains of correction work. Return items that cannot be refinished in the field to the shop; make required alterations and refinish entire unit or provide new units.

3.6 PROTECTION

A. Protect finishes of ornamental formed metal items from damage during construction period. Remove temporary protective coverings at time of Substantial Completion.

3.7 FINISH SCHEDULE: Reference Drawings.

END OF SECTION

SECTION 05 7300

ORNAMENTAL HANDRAILS AND RAILINGS

PART 1 - GENERAL

1.1 SUMMARY

A. Work required for this section includes ornamental handrails and, railings along with supplementary items necessary to complete their installation.

B. Related Section:

1. Division 05 Section "Pipe and Tube Railings" for handrails and railings fabricated from steel pipe and tube components.

1.2 DEFINITIONS

A. Railings: Guards, handrails, and similar devices used for protection of occupants at open-sided floor areas, pedestrian guidance and support, visual separation, or wall protection.

B. Interior: Areas located in conditioned spaces.

C. Exterior: Areas exposed to the elements and areas located in unconditioned spaces.

1.3 DELEGATED ENGINEERING REQUIREMENTS

A. Contract Documents Design Intent: Drawings and Specifications indicate design intent for products and systems and do not necessarily indicate or specify total Work required. Contract Documents shall not be construed as an engineered design; furnish and install all Work required for a complete installation.

B. Delegated Engineering Responsibility: Contractor shall employ a qualified professional engineer to provide engineering for products and systems including attachment to building structure required to meet design intent of Contract Documents.

1. Preparation of structural analysis data including engineering calculations, shop drawings and other submittals signed and sealed by the qualified professional engineer.

C. Delegated Engineering Professional Qualifications: Professional engineer legally authorized to practice in jurisdiction where Project is located and experienced in providing engineering services of kind indicated for products and systems similar to this Project and has a record of successful in-service performance.

D. Coordination of Work:

1. Product Variations: In the event of minor differences between products and systems of acceptable or available manufacturers, Contractor shall notify Architect of such differences and resolve conflicts in a timely manner. Failure of Contractor to provide notification shall be construed as acceptance of conditions indicated, and changes caused by minor differences between products and Contract Documents shall be included in the Work at no additional cost to Owner.
2. Allowable Adjustments: Minor dimension and profile adjustments may be made in interest of fabrication or erection methods or techniques or ability to satisfy design intent, provided design intent is maintained as determined by Architect. Proposed deviations shall include a detailed analysis of impact to adjacent substrates or other building systems, including related design or construction cost impacts. If accepted by Architect, deviations causing changes in materials, constructability, substrates, or conditions shall be included in the Work at no additional cost to Owner.

1.4 ACTION SUBMITTALS

A. Product Data: Manufacturer's technical literature for each product and system indicated.

1. Include manufacturer's specifications for materials, finishes, construction details, installation instructions, and recommendations for maintenance.
2. Manufacturer's product lines of railings assembled from standard components.
3. Grout, anchoring cement, and paint products.

B. Shop Drawings: Show details of fabrication and installation, including plans, elevations, sections, details of components and attachments to other work. Distinguish between shop and field-assembled work.

1. For illuminated railings, include wiring diagrams and roughing-in details.

C. Samples for Initial Selection: For products involving selection of color, texture, or design, including mechanical finishes.

D. Samples for Verification: For each type of exposed finish required.

1. Sections of each distinctly different linear railing member, including handrails, top rails, posts, and balusters.
2. Each type of glass required.
3. Fittings and brackets.
4. Welded or brazed connections, as applicable.
5. Assembled Samples of railing systems, made from full-size components, including top rail, post, handrail, and infill. Show method of finishing members at intersections. Samples need not be full height.

1.5 INFORMATIONAL SUBMITTALS

A. Delegated Engineering Calculations: Informational submittal for products indicated to comply with design loads, include structural analysis data signed and sealed by the qualified professional engineer responsible for their preparation; test reports are not acceptable substitute for calculations.

B. Qualification Data:

1. For firms and persons specified in "Quality Assurance" to demonstrate their capabilities and experience. Include list of completed projects.

C. Mill Certificates for Exterior Stainless Steel Railings: Signed by manufacturers of stainless-steel products certifying that products furnished comply with requirements.

D. Welding certificates.

E. Product Test Reports: Based on evaluation of comprehensive tests performed by a qualified testing agency, according to ASTM E 894 and ASTM E 935.

F. Field Quality Control Reports: Written report of inspection required by "Field Quality Control".

1.6 QUALITY ASSURANCE

A. Manufacturer Qualifications: Manufacturer with not less than 10 years of experience in the successful production and in-service performance of products and systems similar to scope of this Project.

B. Installer Qualifications:

1. Experience: Installer's personnel with not less than 5 years of experience in the successful performance of Work similar to scope of this Project.
2. Supervision: Installer shall maintain a competent supervisor at Project while the Work is in progress, and who has not less than 5 years of experience installing products and systems similar to scope of this Project.

C. Product Options: Information on Drawings and in Specifications establishes requirements for system's aesthetic effects and performance characteristics. Aesthetic effects are indicated by dimensions, arrangements, alignment, and profiles of components and assemblies as they relate to sightlines, to one another, and to adjoining construction. Performance characteristics are indicated by criteria subject to verification by one or more methods including structural analysis, preconstruction testing, field testing, and in-service performance.

1. Do not modify intended aesthetic effects, as judged solely by Architect, except with Architect's approval. If modifications are proposed, submit comprehensive explanatory data to Architect for review.

D. Welding Qualifications: Qualify procedures and personnel according to the following:

1. AWS D1.1/D1.1M, "Structural Welding Code - Steel."
2. AWS D1.2/D1.2M, "Structural Welding Code - Aluminum."
3. AWS D1.6, "Structural Welding Code - Stainless Steel."

E. Safety Glazing Labeling: Permanently mark glass with certification label of the Safety Glazing Certification Council (SGCC) or another certification agency acceptable to authorities having jurisdiction. Label shall indicate manufacturer's name, type of glass, thickness, and safety glazing standard with which glass complies.

F. Electrical Components, Devices, and Accessories: Listed and labeled as defined in NFPA 70, by a qualified testing agency, and marked for intended location and application.

G. Mock-ups: Prior to fabrication and installation, build mock-up for each form of construction and finish required to verify selections made under sample Submittals and to demonstrate aesthetic effects and qualities of materials and execution. Build mock-up using materials indicated for the completed Work.

1. Build mock-up in the location and of the size indicated or, if not indicated, as directed by Architect. Contractor shall provide structural support framework.

a. Show typical components, attachments to building structure, and requirements of installation.

2. Notify Architect seven days in advance of the dates and times when mock-up will be installed.
3. Obtain Architect's acceptance of mock-ups before starting fabrication or installation.
4. Acceptance of mock-ups does not constitute acceptance of deviations from the Contract Documents contained in mock-ups unless such deviations are specifically noted by Contractor and accepted by Architect in writing.
5. Demolish and remove mock-ups when directed by Architect unless accepted to become part of the completed Work.

1.7 PRE-INSTALLATION CONFERENCE

A. Pre-Installation Conference: Before Work begins, conduct conference at Project site.

1. Participants:

a. Architect.

b. Contractor, including superintendent.
c. Installer, including project manager and supervisor.
d. If requested, Manufacturer's qualified technical representative.
e. Installers of other construction interfaced with Work.

2. Minimum Agenda: Installer shall demonstrate understanding of the Work required by describing detailed procedures for preparing, installing, and cleaning the Work. Demonstration shall include, but not be limited to, following topics:

a. Tour representative areas of Work, inspect and discuss condition of substrate, and other preparatory work performed by other trades.
b. Review Contract Document requirements.
c. Review approved submittals.
d. Review inspection and testing requirements.
e. Review environmental conditions and procedures for coping with unfavorable conditions.
f. Resolve deviations or differences between Contract Documents and the manufacturer's specifications.

3. Record discussions, including decisions and agreements, and prepare report.

1.8 PROJECT CONDITIONS

A. Field Measurements: Where products and systems are indicated to fit walls and other construction, verify dimensions by field measurements before fabrication.

1.9 COORDINATION AND SCHEDULING

A. Coordinate installation of products and systems with interfacing and adjoining construction to provide a successful installation without failure.

B. Coordinate selection of shop primers with topcoats to be applied over them. Comply with paint and coating manufacturers' written recommendations to ensure that shop primers and topcoats are compatible with one another.

C. Coordinate installation of anchorages for railings. Furnish setting drawings, templates, and directions for installing anchorages, including sleeves, concrete inserts, anchor bolts, and items with integral anchors, that are to be embedded in concrete or masonry. Deliver such items to Project site in time for installation.

D. Schedule installation so wall attachments are made only to completed walls. Do not support railings temporarily by any means that do not suit structural performance requirements.

PART 2 - PRODUCTS

2.1 MANUFACTURERS AND PRODUCTS

A. Acceptable Manufacturers and Products: Subject to compliance with requirements of Contract Documents as judged by the Architect, provide product by one of manufacturers listed. If not listed, submit as substitution according to the Conditions of the Contract and Division 01 Section "Substitution Procedures".

B. Available Manufacturers and Products: Subject to compliance with requirements of Contract Documents as judged by the Architect, manufacturers offering products that may be incorporated into the Work include, but are not limited to, those listed.

1. Aluminum Decorative Railings:

    a. Blum, Julius & Co., Inc.
    b. Blumcraft of Pittsburg.
    c. CraneVeyor Corp.
    d. Laurence, C.R. Co., Inc.
    e. Livers Bronze Co.
    f. Newman Brothers, Inc.
    g. Sterling Dula Architectural Products, Inc. Div. of Kane Manufacturing.
    h. Wagner, R & B, Ins.; a division of the Wagner Companies.

2. Stainless Steel Decorative Railings:

    a. Blum, Julius & Co., Inc.
    b. Blumcraft of Pittsburg.
    c. CraneVeyor Corp.
    d. Livers Bronze Co.
    e. Newman Brothers, Inc.
    f. VIVA Railings.
    g. Wagner, R & B, Ins.; a division of the Wagner Companies.

3. Steel and Iron Decorative Railings:

    a. Blum, Julius & Co., Inc.
    b. Livers Bronze Co.
    c. Wagner, R & B, Ins.; a division of the Wagner Companies.

4. Glass Supported Railings:

    a. Blum, Julius & Co., Inc.
    b. Blumcraft of Pittsburg.
    c. CraneVeyor Corp.

d. Livers Bronze Co.
e. Newman Brothers, Inc.
f. VIVA Railings.

C. Basis of Design (Product Standard): Contract Documents are based on products and systems specified to establish a standard of quality. Other manufacturers offering products having equivalent characteristics may be considered, provided deviations are minor and comply with requirements of Contract Documents as judged by the Architect.

1. Selections: As scheduled or as indicated on Drawings.

2.2 MATERIALS, GENERAL

A. Single Source Responsibility: Furnish each type of product from single manufacturer. Provide secondary materials only as recommended by manufacturer of primary materials.

2.3 PERFORMANCE REQUIREMENTS

A. Delegated Design: Design railings, including comprehensive engineering analysis by a qualified professional engineer, using performance requirements and design criteria indicated.

B. General: In engineering railings to withstand structural loads indicated, determine allowable design working stresses of railing materials based on the following:

1. Aluminum: The lesser of minimum yield strength divided by 1.65 or minimum ultimate tensile strength divided by 1.95.
2. Copper Alloys: 60 percent of minimum yield strength.
3. Stainless Steel: 60 percent of minimum yield strength.
4. Steel: 72 percent of minimum yield strength.
5. Glass: 25 percent of mean modulus of rupture (50 percent probability of breakage), as listed in "Mechanical Properties" in AAMA's Aluminum Curtain Wall Series No. 12, "Structural Properties of Glass."

C. Structural Performance: Railings shall withstand the effects of gravity loads and the following loads and stresses within limits and under conditions indicated:

1. Handrails and Top Rails of Guards:

a. Uniform load of 50 lbf/ft. (0.73 kN/m) applied in any direction.
b. Concentrated load of 200 lbf (0.89 kN) applied in any direction.
c. Uniform and concentrated loads need not be assumed to act concurrently.

2. Infill of Guards:

a. Concentrated load of 50 lbf (0.22 kN) applied horizontally on an area of 1 sq. ft. (0.093 sq. m).
b. Infill load and other loads need not be assumed to act concurrently.

3. Top Rail at Glass-Supported Railings: Support each section of top rail by a minimum of three glass panels or by other means so top rail will remain in place if any one panel fails.

D. Thermal Movements for Exterior Railings: Allow for thermal movements from ambient and surface temperature changes acting on exterior metal fabrications by preventing buckling, opening of joints, overstressing of components, failure of connections, and other detrimental effects.

1. Temperature Change: 120 deg F (49 deg C), ambient; 180 deg F (82 deg C), material surfaces.

E. Control of Corrosion: Prevent galvanic action and other forms of corrosion by insulating metals and other materials from direct contact with incompatible materials.

2.4 METALS, GENERAL

A. Metal Surfaces, General: Provide materials with smooth surfaces, without seam marks, roller marks, rolled trade names, stains, discolorations, or blemishes.

B. Brackets, Flanges, and Anchors: Same metal and finish as supported rails unless otherwise indicated.

1. Provide either formed- or cast-metal brackets with predrilled hole for exposed bolt anchorage.

2.5 ALUMINUM

A. Aluminum, General: Provide alloy and temper recommended by aluminum producer and finisher for type of use and finish indicated, and with strength and durability properties for each aluminum form required not less than that of alloy and temper designated below.

B. Extruded Bars and Shapes, Including Extruded Tubing: ASTM B 221 (ASTM B 221M), Alloy 6063-T5/T52.

C. Extruded Structural Pipe and Round Tubing: ASTM B 429/B 429M, Alloy 6063-T6.

1. Provide Standard Weight (Schedule 40) pipe unless otherwise indicated.

D. Drawn Seamless Tubing: ASTM B 210 (ASTM B 210M), Alloy 6063-T832.

E. Plate and Sheet: ASTM B 209 (ASTM B 209M), Alloy 5005-H32 or Alloy 6061-T6 as required to meet specification and design performance requirements.

F. Die and Hand Forgings: ASTM B 247 (ASTM B 247M), Alloy 6061-T6.

G. Castings: ASTM B 26/B 26M, Alloy A356.0-T6.

2.6 STAINLESS STEEL

A. Railings:

1. Tubing: ASTM A 554, Grade MT 304.
2. Pipe: ASTM A 312/A 312M, Grade TP 304.
3. Castings: ASTM A 743/A 743M, Grade CF 8 or CF 20.
4. Sheet, Strip, Plate, and Flat Bar: ASTM A 666, Type 304.
5. Bars and Shapes: ASTM A 276, Type 304.

B. Railings:

1. Tubing: ASTM A 554, Grade MT 316 or 316L.
2. Pipe: ASTM A 312/A 312M, Grade TP 316 or 316L.
3. Castings: ASTM A 743/A 743M, Grade CF 8M or CF 3M.
4. Sheet, Strip, Plate, and Flat Bar: ASTM A 666, Type 316 or 316L.
5. Bars and Shapes: ASTM A 276, Type 316 or 316L.

2.7 STEEL AND IRON

A. Tubing: ASTM A 500 (cold formed) or ASTM A 513.

B. Bars: Hot-rolled, carbon steel complying with ASTM A 29/A 29M, Grade 1010.

C. Plates, Shapes, and Bars: ASTM A 36/A 36M.

D. Cast Iron: Either gray iron, ASTM A 48/A 48M, or malleable iron, ASTM A 47/A 47M, unless otherwise indicated.

2.8 GLASS AND GLAZING MATERIALS

A. Laminated Glass: ASTM C 1172, Condition A (uncoated), Type I (transparent flat glass), Quality-Q3 with two plies of glass and cast-in-place and cured-transparent-resin interlayer to comply with interlayer manufacturer's written recommendations needed to comply with requirements.

1. Basis-of-Design Product: <Insert manufacturer's name and product.>
2. Kind: LT (laminated tempered).

3. Glass Color: Clear.
4. Interlayer Basis of Design: DuPont; SentryGlas Ionoplast; clear, thickness as required for intended use.
5. Glass Plies: 1/4 in (6 mm) thick, each ply; unless otherwise required to meet design load.

B. Glazing Cement and Accessories for Structural Glazing: Glazing cement, setting blocks, shims, and related accessories as recommended or supplied by railing manufacturer for installing structural glazing in metal subrails.

1. Glazing Cement: Non-shrinking organic cement designed for curing by passing an electric current through metal subrail holding glass panel, as standard with manufacturer.

C. Glazing Gaskets for Glass Infill Panels: Glazing gaskets and related accessories recommended or supplied by railing manufacturer for installing glass infill panels in post-supported railings.

2.9 FASTENERS

A. Fastener Materials: Unless otherwise indicated, provide the following:

1. Aluminum Components for Interior Railings: Type 304 stainless-steel fasteners.
2. Aluminum Components for Exterior Railings: Type 316 stainless-steel fasteners.
3. Copper-Alloy (Bronze) Components: Silicon bronze (Alloy 651 or Alloy 655) fasteners where concealed; muntz metal (Alloy 280) fasteners where exposed.
4. Copper-Alloy (Brass) Components: Silicon bronze (Alloy 651 or Alloy 655) fasteners where concealed; brass (Alloy 260 or Alloy 360) fasteners where exposed.
5. Stainless-Steel Components: Type 304 stainless-steel fasteners.
6. Stainless-Steel Components: Type 316 stainless-steel fasteners.
7. Uncoated Steel Components: Plated-steel fasteners complying with ASTM B 633, Class Fe/Zn 25 for electrodeposited zinc coating where concealed; Type 304 stainless-steel fasteners where exposed.
8. Galvanized-Steel Components: Plated-steel fasteners complying with ASTM B 633, Class Fe/Zn 25 for electrodeposited zinc coating.
9. Dissimilar Metals for Interior Railings: Type 304 stainless-steel fasteners.
10. Dissimilar Metals for Exterior Railings: Type 316 stainless-steel fasteners.

B. Fasteners for Anchoring to Other Construction: Select fasteners of type, grade, and class required to produce connections suitable for anchoring railings to other types of construction indicated and capable of withstanding design loads.

C. Provide concealed fasteners for interconnecting railing components and for attaching railings to other work unless exposed fasteners are unavoidable.

1. Provide Phillips flat-head machine screws for exposed fasteners unless otherwise indicated.

D. Anchors, General: Anchors capable of sustaining, without failure, a load equal to six times the load imposed when installed in unit masonry and four times the load imposed when installed in concrete, as determined by testing according to ASTM E 488, conducted by a qualified independent testing agency.

E. Post-Installed Anchors: Torque-controlled expansion anchors or chemical anchors.

1. Material for Interior Locations: Carbon-steel components zinc plated to comply with ASTM B 633 or ASTM F 1941 (ASTM F 1941M), Class Fe/Zn 5, unless otherwise indicated.
2. Material for Exterior Locations and Where Stainless Steel Is Indicated: Alloy Group 2 (A4) stainless-steel bolts, ASTM F 593 (ASTM F 738M), and nuts, ASTM F 594 (ASTM F 836M).

2.10 MISCELLANEOUS MATERIALS

A. Wood Rails: Hardwood rails complying with Division 06 Section "Interior Architectural Woodwork."

B. Electrical Components for Illuminated Railings: Provide internal, fluorescent light fixtures and electrical components, required as part of illuminated railings, that comply with NFPA 70 and that are listed and labeled by UL.

C. Welding Rods and Bare Electrodes: Select according to AWS specifications for metal alloy welded.

1. Aluminum Railings: For aluminum railings, provide type and alloy as recommended by producer of metal to be welded and as required for color match, strength, and compatibility in fabricated items.

D. Brazing Rods for Copper-Alloy Railings: For copper-alloy railings, provide type and alloy as recommended by producer of metal to be brazed and as required for color match, strength, and compatibility in fabricated items.

E. Lacquer for Copper Alloys: Clear acrylic lacquer specially developed for coating copper-alloy products.

F. Etching Cleaner for Galvanized Metal: Complying with MPI#25.

G. Bituminous Paint: Cold-applied asphalt emulsion complying with ASTM D 1187.

H. Non-shrink, Non-metallic Grout: Factory-packaged, non-staining, non-corrosive, non-gaseous grout complying with ASTM C 1107. Provide grout specifically recommended by manufacturer for interior and exterior applications.

2.11 FABRICATION

A. General: Fabricate railings to comply with requirements indicated for design, dimensions, member sizes and spacing, details, finish, and anchorage, but not less than that required to support structural loads.

B. Assemble railings in the shop to greatest extent possible to minimize field splicing and assembly. Disassemble units only as necessary for shipping and handling limitations. Clearly mark units for reassembly and coordinated installation. Use connections that maintain structural value of joined pieces.

C. Make up wire-rope assemblies in the shop to field-measured dimensions with fittings machine swaged. Minimize amount of turnbuckle take-up used for dimensional adjustment so maximum amount is available for tensioning wire ropes. Tag wire-rope assemblies and fittings to identify installation locations and orientations for coordinated installation.

D. Cut, drill, and punch metals cleanly and accurately. Remove burrs and ease edges to a radius of approximately 1/32 in (0.8 mm) unless otherwise indicated. Remove sharp or rough areas on exposed surfaces.

E. Form work true to line and level with accurate angles and surfaces.

F. Fabricate connections that will be exposed to weather in a manner to exclude water. Provide weep holes where water may accumulate. Locate weep holes in inconspicuous locations.

G. Cut, reinforce, drill, and tap as indicated to receive finish hardware, screws, and similar items.

H. Connections: Fabricate railings with welded or Non-welded connections unless otherwise indicated.

I. Welded Connections: Cope components at connections to provide close fit, or use fittings designed for this purpose. Weld all around at connections, including at fittings.

1. Use materials and methods that minimize distortion and develop strength and corrosion resistance of base metals.
2. Obtain fusion without undercut or overlap.
3. Remove flux immediately.
4. At exposed connections, finish exposed welds to comply with NOMMA's "Voluntary Joint Finish Standards" for Type 1 welds: no evidence of a welded joint.

J. Brazed Connections for Copper-Alloy Railings: Connect copper-alloy railings by brazing. Cope components at connections to provide close fit, or use fittings designed for this purpose. Braze corners and seams continuously.

1. Use materials and methods that match color of base metal, minimize distortion, and develop maximum strength and corrosion resistance.
2. Remove flux immediately.
3. At exposed connections, finish exposed surfaces smooth and blended so no roughness shows after finishing and brazed surface matches contours of adjoining surfaces.

K. Mechanical Connections: Connect members with concealed mechanical fasteners and fittings. Fabricate members and fittings to produce flush, smooth, rigid, hairline joints.

1. Fabricate splice joints for field connection using an epoxy structural adhesive if this is manufacturer's standard splicing method.

L. Form changes in direction by flush bends or by inserting prefabricated flush-elbow fittings. Where applicable, by radius bends of radius indicated or by inserting prefabricated elbow fittings of radius indicated.

M. Bend members in jigs to produce uniform curvature for each configuration required; maintain cross section of member throughout entire bend without buckling, twisting, cracking, or otherwise deforming exposed surfaces of components.

N. Close exposed ends of hollow railing members with prefabricated end fittings.

O. Provide wall returns at ends of wall-mounted handrails unless otherwise indicated. Close ends of returns, unless clearance between end of rail and wall is 1/4 in (6 mm) or less.

P. Brackets, Flanges, Fittings, and Anchors: Provide wall brackets, flanges, miscellaneous fittings, and anchors to interconnect railing members to other work unless otherwise indicated.

1. Interior Installations at Plaster or Gypsum Board Partitions: At brackets and fittings fastened to plaster or gypsum board partitions, provide crush-resistant fillers, or other means to transfer loads through wall finishes to structural supports and prevent bracket or fitting rotation and crushing of substrate.

Q. Provide inserts and other anchorage devices for connecting railings to concrete or masonry work. Fabricate anchorage devices capable of withstanding loads imposed by railings. Coordinate anchorage devices with supporting structure.

R. For railing posts set in concrete, provide steel sleeves not less than 6 in (150 mm) long with inside dimensions not less than 1/2 in (12 mm) greater than outside dimensions of post, with metal plate forming bottom closure.

S. Toe Boards: Where indicated, provide toe boards at railings around openings and at edge of open-sided floors and platforms. Fabricate to dimensions and details indicated.

2.12 GLAZING PANEL FABRICATION

A. General: Fabricate to sizes and shapes required; provide for proper edge clearance and bite on glazing panels.

1. Clean-cut or flat-grind edges at butt-glazed sealant joints to produce square edges with slight chamfers at junctions of edges and faces
2. Grind smooth exposed edges, including those at open joints, to produce square edges with slight chamfers at junctions of edges and faces.

B. Structural Glass Balusters: Factory-bond glass to aluminum base and top-rail channels in railing manufacturer's plant using glazing cement to comply with manufacturer's written specifications, unless field glazing is standard with manufacturer.

C. Structural Balusters: Provide laminated, tempered glass panels for both straight and curved sections.

D. Infill Panels: Provide laminated, tempered glass panels for both straight and curved sections.

2.13 GENERAL FINISH REQUIREMENTS

A. Comply with NAAMM's "Metal Finishes Manual for Architectural and Metal Products" for recommendations for applying and designating finishes.

B. Protect mechanical finishes on exposed surfaces from damage by applying a strippable, temporary protective covering before shipment.

C. Appearance of Finished Work: Noticeable variations in same piece are not acceptable. Variations in appearance of abutting or adjacent pieces are acceptable if they are within one-half of the range of approved Samples. Variations in appearance of other components are acceptable if they are within the range of approved Samples and are assembled or installed to minimize contrast.

D. Provide exposed fasteners with finish matching appearance, including color and texture, of railings.

2.14 ALUMINUM FINISHES

A. Finish designations prefixed by AA comply with the system established by the Aluminum Association for designating aluminum finishes.

B. Mechanical Finish: AA-M3x (Mechanical Finish: as specified); sand top rails, handrails, and intermediate rails in one direction only, parallel to length of railing, with 120- and 320-grit abrasive. After installation, polish railings with No. 0 steel wool immersed in paste wax, then rub to a luster with a soft dry cloth.

C. Clear Anodic Finish at Interior Installations: AAMA 611, AA-M12C22A31, Class II, 0.010 mm or thicker.

D. Clear Anodic Finish at Exterior Installations: AAMA 611, AA-M12C22A41, Class I, 0.018 mm or thicker.

E. Color Anodic Finish at Interior Installations: AAMA 611, AA-M12C22A32/A34, Class II, 0.010 mm or thicker.

1. Color: As scheduled or as indicated in Design Selections.

F. Color Anodic Finish at Exterior Installations: AAMA 611, AA-M12C22A42/A44, Class I, 0.018 mm or thicker.

1. Color: As scheduled or as indicated in Design Selections

G. High-Performance Organic Finish: High-Performance Organic Finish: Prepare, pretreat, and apply coating to exposed metal surfaces to comply with coating and resin manufacturers' written instructions. Provide dry film thickness, primers, color coats and clear coats required to comply with performance requirements and warranty periods indicated.

1. PVDF Fluoropolymer Finish: Fluoropolymer finish complying with AAMA 2605 and containing not less than 70 percent PVDF resin by weight in color coat.
2. FEVE Fluoropolymer Finish: Fluoropolymer finish complying with AAMA 2605 and containing 100 percent fluorinated ethylene vinyl ether (FEVE) resin in color coat.
3. Color and Gloss: As scheduled or as indicated in Design Selections.

H. Baked-Enamel or Powder-Coat Finish: AAMA 2603 except with a minimum dry film thickness of 1.5 mils (0.04 mm). Comply with coating manufacturer's written instructions for cleaning, conversion coating, and applying and baking finish.

1. Color and Gloss: As scheduled or as indicated in Design Selections.

I. Siliconized Polyester Finish: Epoxy primer and silicone-modified, polyester-enamel topcoat; with a dry film thickness of not less than 0.2 mil (0.005 mm) for primer and 0.8 mil (0.02 mm) for topcoat.

1. Color and Gloss: As scheduled or as indicated in Design Selections.

2.15 STAINLESS-STEEL FINISHES

A. Surface Preparation: Remove tool and die marks and stretch lines, or blend into finish.

B. Polished Finishes: Grind and polish surfaces to produce uniform finish, free of cross scratches.

1. Directional Finishes: Run grain of directional finishes with long dimension of each piece.

C. Directional Satin Finish: No. 4.

D. Dull Satin Finish: No. 6.

E. Satin, Reflective, Directional Polish: No. 7.

F. Mirrorlike Reflective, Non-directional Polish: No. 8.

G. When polishing is completed, passivate and rinse surfaces. Remove embedded foreign matter and leave surfaces chemically clean.

H. Sputter-Coated Finish: Titanium nitride coating deposited by magnetic sputter-coating process over indicated mechanical finish.

I. Finish: Match Architect's sample.

J. Finish: As scheduled or as indicated in Design Selections.

2.16 STEEL AND IRON FINISHES

A. Galvanized Railings for Exterior Installations:

1. General:

a. Hot-dip galvanize steel and iron railings, including hardware, after fabrication.
b. Comply with ASTM A 123/A 123M for hot-dip galvanized railings.
c. Comply with ASTM A 153/A 153M for hot-dip galvanized hardware.
d. Do not quench or apply post galvanizing treatments that might interfere with paint adhesion.
e. Fill vent and drain holes that are exposed in the finished Work, unless indicated to remain as weep holes, by plugging with zinc solder and filing off smooth.

2. For galvanized railings, provide hot-dip galvanized fittings, brackets, fasteners, sleeves, and other ferrous components.

B. Non-Galvanized Railings for Interior Installations:

1. For non-galvanized-steel railings, provide Non-galvanized ferrous-metal fittings, brackets, fasteners, and sleeves, except galvanize anchors to be embedded in exterior concrete or masonry.

C. Powder-Coat Finish for Non-Galvanized Steel and Iron Installations: Prepare, treat, and coat non-galvanized ferrous metal to comply with resin manufacturer's written instructions and as follows:

1. Prepare uncoated ferrous-metal surfaces to comply with SSPC-SP 6/NACE No. 3, "Commercial Blast Cleaning."
2. Treat prepared metal with iron-phosphate pretreatment, rinse, and seal surfaces.
3. Apply thermosetting polyester or acrylic urethane powder coating with cured-film thickness not less than 1.5 mils (0.04 mm).
4. Color and Gloss: As scheduled or as indicated in Design Selections.

D. Powder-Coat Finish for Galvanized Steel and Iron Installations: Prepare, treat, and coat galvanized metal to comply with resin manufacturer's written instructions and as follows:

1. Prepare galvanized metal by thoroughly removing grease, dirt, oil, flux, and other foreign matter.
2. Treat prepared metal with zinc-phosphate pretreatment, rinse, and seal surfaces.
3. Apply thermosetting polyester or acrylic urethane powder coating with cured-film thickness not less than 1.5 mils (0.04 mm).
4. Color and Gloss: As scheduled or as indicated in Design Selections .

E. High-Performance Coating for Non-Galvanized Steel and Iron Installations: Apply epoxy intermediate and polyurethane topcoats to prime-coated surfaces. Comply with coating manufacturer's written instructions and with requirements in SSPC-PA 1, "Paint Application Specification No. 1: Shop, Field, and Maintenance Painting of Steel," for shop painting. Apply at spreading rates recommended by coating manufacturer.

1. Color and Gloss: As scheduled or as indicated in Design Selections.

F. Preparing Non-galvanized Items for Shop Priming: Prepare uncoated ferrous-metal surfaces to comply with requirements indicated below:

1. Exterior Railings: SSPC-SP 6/NACE No. 3, "Commercial Blast Cleaning".
2. Interior Railings: SSPC-SP 7/NACE No. 4, "Brush-off Blast Cleaning".

G. Primer Application: Apply shop primer to prepared surfaces of railings unless otherwise indicated. Comply with requirements in SSPC-PA 1, "Paint Application Specification No. 1: Shop, Field, and Maintenance Painting of Steel," for shop painting. Primer need not be applied to surfaces to be embedded in concrete or masonry.

1. Shop prime uncoated railings with primers specified in Division 09 Section "Painting".
2. Shop prime uncoated railings with primer specified in Division 09 Section ‘‘ÓHigh-Performance Coatings’’□.
3. Do not apply primer to galvanized surfaces.

H. Field-Painted Finish: Comply with Division 09 Section "Painting".

1. Color and Gloss: As scheduled or as indicated in Design Selections.

I. Field-Painted Coatings: Comply with Division 09 Section “ÓHigh-Performance Coatings”□.

1. Color and Gloss: As scheduled or as indicated in Design Selections.

PART 3 - EXECUTION

3.1 EXAMINATION

A. Acceptance of Surfaces and Conditions: Examine substrates to receive products and systems and associated work for compliance with requirements and other conditions affecting performance. Proceed only when unsatisfactory conditions have been corrected in a manner complying with Contract Documents. Starting work within a particular area will be construed as acceptance of surface conditions.

B. Interior Installations: Examine plaster and gypsum board assemblies, where reinforced to receive anchors, to verify that locations of concealed reinforcements have been clearly marked for Installer. Locate reinforcements and mark locations if not already done.

3.2 INSTALLATION, GENERAL

A. Installation Quality Standards: In addition to standards listed elsewhere, perform Work according to following, unless otherwise specified:

1. Respective manufacturer/fabricator’s written installation instructions.
2. Accepted submittals.
3. Contract Documents.

B. Control of Corrosion: Prevent galvanic action and other forms of corrosion by isolating metals and other materials from direct contact with incompatible materials.

3.3 PREPARATION

A. General: Comply with manufacturer’s instructions, recommendations, and specifications for cleaning and surface preparation. Surfaces shall have no defects, contaminants, or errors which would result in poor or potentially defective installation or would cause latent defects in Work.

3.4 INSTALLATION

A. Fit exposed connections together to form tight, hairline joints.

B. Perform cutting, drilling, and fitting required for installing railings. Set railings accurately in location, alignment, and elevation; measured from established lines and levels and free of rack.

1. Do not weld, cut, or abrade surfaces of railing components that have been coated or finished after fabrication and that are intended for field connection by mechanical or other means without further cutting or fitting.
2. Set posts plumb within a tolerance of 1/16 in in 3 feet (1.5 mm in 1 m).
3. Align rails so variations from level for horizontal members and variations from parallel with rake of steps and ramps for sloping members do not exceed 1/4 in in 12 feet (6 mm in 3.6 m).

C. Corrosion Protection for Aluminum or Copper Alloys: Coat concealed surfaces of aluminum or copper alloys that will be in contact with grout, concrete, masonry, wood, or dissimilar metals, with a heavy coat of bituminous paint.

D. Adjust railings before anchoring to ensure matching alignment at abutting joints.

E. Fastening to In-Place Construction: Use anchorage devices and fasteners where necessary for securing railings and for properly transferring loads to in-place construction.

3.5 RAILING CONNECTIONS

A. Non-welded Connections: Use mechanical or adhesive joints for permanently connecting railing components. Use wood blocks and padding to prevent damage to railing members and fittings. Seal recessed holes of exposed locking screws using plastic cement filler colored to match finish of railings.

B. Welded Connections: Use fully welded joints for permanently connecting railing components. Comply with requirements for welded connections in "Fabrication" Article whether welding is performed in the shop or in the field.

C. Expansion Joints: Install expansion joints at locations indicated but not farther apart than required to accommodate thermal movement. Provide slip-joint internal sleeve extending 2 in (50 mm) beyond joint on either side, fasten internal sleeve securely to one side, and locate joint within 6 in (150 mm) of post.

3.6 ANCHORING POSTS

A. Use steel pipe sleeves preset and anchored into concrete for installing posts. After posts have been inserted into sleeves, fill annular space between post and sleeve with non-shrink, non-metallic grout, mixed and placed to comply with anchoring material manufacturer's written instructions.

B. Cover anchorage joint with flange of same metal as post, attached to post with set screws.

C. Anchor posts to metal surfaces with flanges, angle type, or floor type as required by conditions, connected to posts and to metal supporting members as follows:

1. Aluminum Railings: For aluminum railings, attach posts as indicated using fittings designed and engineered for this purpose.
2. Copper-Alloy Railings: For copper-alloy railings, attach posts as indicated using fittings designed and engineered for this purpose.
3. Stainless Steel Railings: For stainless-steel railings, weld flanges to posts and bolt to metal-supporting surfaces.
4. Steel Railings: For steel railings, weld flanges to posts and bolt to metal-supporting surfaces.

3.7 ATTACHING RAILINGS

A. Anchor railing ends to concrete and masonry with flanges connected to railing ends and anchored to wall construction with anchors and bolts.

B. Anchor railing ends to metal surfaces with flanges bolted to metal surfaces and welded to railing ends or connected to railing ends using non-welded connections.

C. Attach handrails to walls with wall brackets except where end flanges are used. Provide brackets with 1-1/2 in (38 mm) clearance from inside face of handrail and finished wall surface. Locate brackets as indicated or, if not indicated, at spacing required to support structural loads.

1. Use type of bracket with flange tapped for concealed anchorage to threaded hanger bolt.
2. Locate brackets as indicated or, if not indicated, at spacing required to support structural loads.

D. Secure wall brackets and railing end flanges to building construction as follows:

1. For concrete and solid masonry anchorage, use drilled-in expansion shields and hanger or lag bolts.
2. For hollow masonry anchorage, use toggle bolts.
3. For steel-framed partitions, fasten brackets directly to steel framing or concealed steel reinforcements using self-tapping screws of size and type required to support structural loads.

3.8 INSTALLING GLASS PANELS

A. Glass-Supported Railings: Install assembly to comply with railing manufacturer's written instructions.

1. Attach base channel to building structure, then insert and connect factory-fabricated and -assembled glass panels if glass was bonded to base and top rail channels in factory.

2. Attach base channel to building structure, then insert glass into base channel and bond with glazing cement unless glass was bonded to base and top rail channels in factory.

    a. Support glass panels in base channel at quarter points with channel-shaped setting blocks that also act as shims to maintain uniform space for glazing cement. Fill remaining space in base channel with glazing cement for uniform support of glass.

3. Adjust spacing of glass panels so gaps between panels are equal before securing in position.
4. Erect glass railings under direct supervision of manufacturer's authorized technical personnel.

B. Post-Supported Glass Railings: Install assembly to comply with railing manufacturer's written instructions and with requirements in other Part 3 articles. Erect posts and other metal railing components, then set factory-cut glass panels. Do not cut, drill, or alter glass panels in field. Protect edges from damage.

3.9 FIELD QUALITY CONTROL

A. Manufacturer's Field Service: Manufacturer's qualified technical representative shall periodically inspect Work to ensure installation is proceeding in accordance with manufacturer's designs, recommendations, instructions, and warranty requirements. Representative shall submit written reports of each visit indicating observations, findings, and conclusions of inspection.

1. Manufacturer's Technical Representative Qualifications: Direct employee of technical services department of manufacturer with experience in providing recommendations, observations, evaluations, and problem diagnostics.

3.10 CLEANING

A. Clean aluminum and stainless steel by washing thoroughly with clean water and soap, rinsing with clean water, and wiping dry.

B. Clean copper alloys according to metal finisher's written instructions in a manner that leaves an undamaged and uniform finish matching approved Sample.

C. Clean and polish glass as recommended in writing by manufacturer. Wash both exposed surfaces in each area of Project not more than four days before date scheduled for inspections that establish date of Substantial Completion.

D. Clean wood rails by wiping with a damp cloth and then wiping dry.

3.11 PROTECTION

A. Protect finishes of railings from damage during construction period with temporary protective coverings approved by railing manufacturer. Remove protective coverings at time of Substantial Completion.

B. Restore finishes damaged during installation and construction period so no evidence remains of correction work. Return items that cannot be refinished in the field to the shop; make required alterations and refinish entire unit, or provide new units.

3.12 FINISH SCHEDULE: Reference drawings.

END OF SECTION

SECTION 06 1053

MISCELLANEOUS ROUGH CARPENTRY

PART 1 - GENERAL

1.1 SUMMARY

A. Section Includes: Miscellaneous rough carpentry and supplementary items necessary for installation.

1. Section also includes composite plastic lumber materials.

1.2 DEFINITIONS

A. Dimension Lumber: Lumber of 2 in nominal (38 mm actual) or greater, but less than 5 in nominal (114 mm actual) in least dimension.

B. Lumber Grading Agencies:

1. NeLMA: Northeastern Lumber Manufacturers' Association.
2. NHLA: National Hardwood Lumber Association.
3. NLGA: National Lumber Grades Authority.
4. SPIB: The Southern Pine Inspection Bureau.
5. WCLIB: West Coast Lumber Inspection Bureau.
6. WWPA: Western Wood Products Association.

1.3 ACTION SUBMITTALS

A. Product Data: Manufacturer's technical literature for each product and system indicated.

1. Include manufacturer's specifications for materials, finishes, construction details, installation instructions, and recommendations for maintenance.
2. Preservative-Treated Wood: Include data for wood preservative treatment from chemical treatment manufacturer and certification by treating plant that treated materials comply with requirements. Indicate type of preservative used, net amount of preservative retained, and chemical treatment manufacturer's written instructions for handling, storing, installing, and finishing treated material.
3. Fire-Retardant-Treated Wood: Include data for fire-retardant treatment from chemical treatment manufacturer and certification by treating plant that treated materials comply with requirements. Include physical properties of treated materials, both before and after exposure to elevated temperatures when tested according to ASTM D 5664.
4. Waterborne-Treated Wood: For products receiving a waterborne treatment, include statement that moisture content of treated materials was reduced to levels specified before shipment to Project site.
5. Warranties: Include copies from chemical treatment manufacturers for each type of treatment.

1.4 INFORMATIONAL SUBMITTALS

A. Building Code Evaluation Reports: Published reports from model code organization, acceptable to authorities having jurisdiction, that following evidences compliance with building code in effect for the Project.

1. Preservative-treated wood.
2. Fire-retardant-treated wood.

B. Qualification Data:

1. For firms and persons specified in "Quality Assurance" to demonstrate their capabilities and experience. Include list of completed projects.

1.5 QUALITY ASSURANCE

A. Testing Agency Qualifications: For testing agency providing classification marking for fire-retardant-treated material, an inspection agency acceptable to authorities having jurisdiction that periodically performs inspections to verify that the material bearing the classification marking is representative of the material tested.

1.6 DELIVERY, STORAGE, AND HANDLING

A. Stack lumber flat with spacers between each bundle. Protect lumber from weather by covering with waterproof sheeting, securely anchored. Provide for air circulation around stacks and under coverings.

1.7 PROJECT CONDITIONS

A. Field Measurements: Where products and systems are indicated to fit walls and other construction, verify dimensions by field measurements before fabrication.

1.8 COORDINATION

A. Coordinate installation of products and systems with interfacing and adjoining construction to provide a successful installation without failure.

PART 2 - PRODUCTS

2.1 MATERIALS, GENERAL

A. Single Source Responsibility: Furnish each type of product from single manufacturer. Provide secondary materials only as recommended by manufacturer of primary materials.

2.2 PERFORMANCE REQUIREMENTS

A. General Performance: Engineer products and systems to withstand loads within limits of allowable working stresses of the materials involved under conditions indicated and without permanent deformation or failure of materials.

B. Miscellaneous Rough Carpentry within Roofing System Assemblies: Wood cants, nailers, curbs, equipment support bases, blocking, and similar members in connection with roofing system assembly and flashings shall be fabricated and installed to withstand specified uplift pressures and thermally induced movement without contributing to failure of roofing system or flashings.

C. Surface Burning Characteristics for Fire-Retardant-Treated Wood: Products and construction identical to assemblies tested for fire resistance according to ASTM E 84/NFPA 255/UL 723 and included under Category BPVV published in Underwriters Laboratories, Inc. (UL) "Fire Resistance Directory"; or listing of another testing and inspecting agency acceptable to authorities having jurisdiction.

1. Flame Spread: Class A - no greater than 25.
2. Smoke Developed: No greater than 450.

2.3 WOOD PRODUCTS

A. Dimension Lumber:

1. Material Quality Standards: DOC PS 20 and applicable rules of grading agencies indicated. If no grading agency is indicated, provide lumber that complies with applicable rules of any rules-writing agency certified by ALSC Board of Review. Provide lumber graded by an agency certified by ALSC Board of Review to inspect and grade lumber under rules indicated.
2. Grade: Provide No. 2 grade, of any of following species:

    a. Hem-fir (north); NLGA.
    b. Hem-fir; WCLIB, or WWPA.
    c. Mixed southern pine; SPIB.
    d. Spruce-pine-fir; NLGA.
    e. Spruce-pine-fir (south); NeLMA, WCLIB, or WWPA.
    f. Douglas fir-larch; WCLIB or WWPA.
    g. Douglas fir-larch (north); NLGA.
    h. Douglas fir-south; WWPA.
    i. Northern species; NLGA.
    j. Eastern softwoods; NeLMA.
    k. Western woods; WCLIB or WWPA.

3. Grade Marking: Factory mark each piece of lumber with grade stamp of grading agency.
4. Sizes: Where nominal sizes are indicated, provide actual sizes required by DOC PS 20 for moisture content specified. Where actual sizes are indicated, they are minimum dressed sizes for dry lumber.
5. Finish: Provide dressed lumber, sanded four sides, unless otherwise indicated.
6. Maximum Moisture Content:

    a. Provide kiln-dry lumber with 19 percent maximum moisture content at time of dressing for 2 in nominal (38 mm actual) thickness or less, for concealed conditions.
    b. Provide kiln-dry lumber with 15 percent maximum moisture content at time of dressing for 2 in nominal (38 mm actual) thickness or less, for exposed conditions.

B. Plywood:

1. Material Quality Standard: DOC PS 1, Exposure 1.
2. Grades: Furnish the grades below according to installation location:

    a. A-C; when exposed at occupied interior locations.
    b. B-C; when exposed at mechanical and electrical equipment rooms.

3. Grade Marking: Factory mark each piece of plywood with grade stamp of grading agency.
4. Thickness: Not less than 1/2 in (12 mm), unless indicated otherwise.

2.4 TREATED WOOD PRODUCTS

A. Preservative-Treated Wood:

1. Product Quality Standard: AWPA, Use Category UC4a, for species, product, preservative, and end use. Use preservative treatment that does not promote corrosion of metal fasteners.
2. Description: Wood products impregnated with chemicals by pressure process acceptable to authorities having jurisdiction, according to the following:

    a. Listed in Section 4 of AWPA U1.
    b. Containing no arsenic or chromium.

3. Field Preservative-Treatment for Cut Surfaces: Apply one of the following depending upon conditions listed below, in accordance with AWPA M4:

    a. Continuously Protected from Liquid Water: Inorganic boron.
    b. Not Continuously Protected from Liquid Water: Copper naphthenate.

B. Fire-Retardant-Treated Wood:

1. Product Quality Standards: Provide materials that comply with performance requirements in AWPA C20 (lumber) and AWPA C27 (plywood). Identify fire-retardant-treated wood with appropriate classification marking of UL, U.S. Testing, Timber Products Inspection, or another testing and inspecting agency acceptable to authorities having jurisdiction. Use fire-retardant treatment that does not promote corrosion of metal fasteners.

    a. Concealed Wood Blocking: Chemical formulations for fire retardant treatment to contain a compatible, non-bleed, light fast, colored dye to identify and indicate treatment.

2. Description: Wood products impregnated with chemicals by pressure process, or other means acceptable to authorities having jurisdiction, having following characteristics:

    a. Fire-retardant-treated materials shall comply with performance requirements specified above after being subjected to accelerated weathering according to ASTM D 2898.
    b. Use treatment for which chemical manufacturer publishes physical properties of treated wood after exposure to elevated temperatures, when tested by a qualified independent testing agency according to ASTM D 5664, for lumber and ASTM D 5516, for plywood.
    c. Use Interior Type A High Temperature (HT), unless otherwise indicated.

C. Moisture Content: Kiln-dry wood after treatment to following maximum moisture content:

1. 19 percent for lumber.
2. 15 percent for plywood.

D. Quality Marking: Identify with appropriate classification marking of testing and inspecting agency acceptable to authorities having jurisdiction.

2.5 FASTENERS

A. Fastener Types and Materials: Select fasteners for type, grade, and class required. Unless otherwise indicated, furnish Type 304 stainless steel fasteners for exterior use and zinc-plated fasteners with coating complying with ASTM B 633 or ASTM F 1941 / F 1941M, Class Fe/Zn 5, within roofing system assemblies.

B. Nails, Brads, and Staples: ASTM F 1667.

C. Power-Driven Fasteners: ICC-ES NER-272.

D. Powder-Actuated Fasteners: ANSI A10.3; low velocity, powder-actuated fasteners; drive pins and washers fabricated from corrosion-resistant materials; powder loads suitable for application indicated; and capable of sustaining, without failure, an ultimate load capacity not less than 10 times that imposed by construction as determined by testing according to ASTM E 1190 by a qualified independent testing agency.

E. Wood Screws: ASME B18.6.1, flat head, carbon steel.

F. Screws for Fastening to Metal Framing: As specified in the following locations.

1. Division 05 Section "Cold-Formed Steel Framing".
2. Division 09 Section "Gypsum Board Assemblies".

G. Lag Bolts: ASME B18.2.1/ASME B18.2.3.8M.

H. Bolts: Steel bolts complying with ASTM A 307, Grade A / ASTM F 568M, Property Class 4.6; with ASTM A 563 / ASTM A 563M hex nuts and, where indicated, flat washers.

2.6 ANCHORS

A. Anchors: Capable of sustaining, without failure, a load equal to 6 times load imposed when installed in unit masonry and 4 times load imposed when installed in concrete, as determined by testing according to ASTM E 488, conducted by a qualified independent testing agency.

B. Cast-in-Place Anchors in Concrete: Bolts, washers, and shims as needed, either threaded type or wedge type unless otherwise indicated; galvanized ferrous castings, either ASTM A 47 / A 47M malleable iron or ASTM A 27 / A 27M cast steel; hot-dip galvanized according to ASTM F 2329.

C. Post-Installed Anchors:

1. Generic Type: Torque-controlled expansion anchors.
2. Material for Interior Locations: Carbon-steel components zinc plated to comply with ASTM B 633 or ASTM F 1941 / F 1941M, Class Fe/Zn 5, unless otherwise indicated.

3. Material for Exterior Locations and where Stainless Steel is indicated: Stainless steel with bolts and nuts complying with ASTM F 593 and ASTM F 594, Alloy Group 1 or 2 (ASTM F 738M and ASTM F 836M, Grade A1 or A4.

PART 3 - EXECUTION

3.1 EXAMINATION

A. Acceptance of Surfaces and Conditions: Examine substrates to receive products, fabrications, and associated work for compliance with requirements and other conditions affecting performance. Proceed only when unsatisfactory conditions have been corrected in a manner complying with Contract Documents. Starting work within a particular area will be construed as acceptance of surface conditions.

3.2 INSTALLATION, GENERAL

A. Installation Quality Standards: In addition to standards listed elsewhere, perform Work according to following, unless otherwise specified:

1. Respective manufacturer written installation instructions.
2. Accepted submittals.
3. Contract Documents.

B. Control of Corrosion: Prevent galvanic action and other forms of corrosion by isolating metals and other materials from direct contact with incompatible materials.

C. General Requirements:

1. Securely attach Work to substrate according to authorities having jurisdiction.
2. Select fasteners of appropriate size, type, and length that will not fully penetrate members where opposite side will be exposed to view or will receive finish materials. Make tight connections between members. Predrill members when necessary to avoid splitting wood while installing fasteners. Do not countersink nail heads, unless otherwise indicated. Recess bolts and nuts flush with surfaces, unless otherwise indicated.
3. Sort and select lumber so that natural characteristics will not interfere with installation or with fastening other materials to lumber.
4. Do not use material with the following conditions:

    a. Material that is warped or does not comply with requirements for untreated material.
    b. Materials with defects that interfere with function of member.
    c. Pieces which are too small to use with minimum number of joints or optimum joint arrangement.

5. Set carpentry to required levels and lines, with members plumb, true to line, and level. Fit carpentry to other construction; scribe and cope as needed for accurate fit. Locate furring, nailers, blocking, grounds, and similar supports to comply with requirements for attaching other construction.
6. Apply field preservative-treatment to cut surfaces of preservative-treated wood.
7. Where preservative-treated lumber is installed adjacent to metal decking, install continuous flexible flashing separator between wood and metal decking.

D. Schedule of Applications:

1. Preservative-Treated Wood: Use preservative-treated wood for the following applications.

   a. Wood cants, nailers, curbs, equipment support bases, blocking, stripping, and similar members in connection with roofing, flashing, vapor barriers, and waterproofing systems.
   b. Wood sills, sleepers, blocking, furring, stripping, and similar concealed members in contact with masonry or concrete.
   c. Wood framing and furring attached directly to the interior of below-grade exterior masonry or concrete walls.

2. Fire-Retardant-Treated Wood: Use fire-retardant-treated wood for the following applications:

   a. Concealed wood blocking within interior partitions.
   b. Exposed plywood backing panels supporting equipment at interior locations.

3. Untreated Wood: Not allowed.

3.3 WOOD BLOCKING AND NAILER INSTALLATION

A. Install where indicated and where required for attaching other work. Coordinate locations with other work involved.

B. Securely attach items to substrates to support applied loading.

3.4 PLYWOOD INSTALLATION

A. Install plywood backing panels by fastening to studs; coordinate locations with utilities requiring backing panels.

B. Install fire-retardant-treated plywood backing panels with classification marking of testing agency exposed to view.

3.5 PROTECTION

A. General: Protect untreated wood, and wood that has been treated with chemicals that can leach, from deterioration due to weather.

END OF SECTION

SECTION 06 1643

EXTERIOR GYPSUM SHEATHING

PART 1 - GENERAL

1.1 SUMMARY

A. Section Includes: Exterior gypsum sheathing products and supplementary items necessary for installation.

B. Related Section:

1. Refer to Division 7 section for applicable Air and Water Barrier system and related requirements. Ensure compatibility of joint treatment components with Air and Water Barrier system.

1.2 DEFINITIONS

A. Gypsum Board Construction Terminology: Refer to ASTM C 11 for definitions of terms not defined in this Section or in other referenced quality standards.

1.3 ACTION SUBMITTALS

A. Product Data: Manufacturer's technical literature for each product and system indicated.

1. Include manufacturer's specifications for materials, finishes, construction details, installation instructions, and recommendations for maintenance.

1.4 INFORMATIONAL SUBMITTALS

A. Product Test Reports: Written reports based on evaluation of comprehensive tests performed by qualified testing agency indicating that each product complies with requirements.

B. Field Quality Control Reports: Written report of testing and inspection required by "Field Quality Control".

C. Manufacturer's Project Acceptance Document: Certification by the manufacturer that its product(s) are approved, acceptable, suitable for use in specific locations, for specific details, and for applications indicated, specified, or required, and that a warranty will be issued.

D. Qualification Data:

1. For firms and persons specified in "Quality Assurance" to demonstrate their capabilities and experience. Include list of completed projects.

E. Warranty: Sample of warranty.

1. Provide manufacturer's written warranty covering materials and installation (labor) stating obligations, remedies, limitations, and exclusions.

1.5 QUALITY ASSURANCE

A. Installer Qualifications:

1. Experience: Installer's personnel with not less than 5 years of experience in the successful performance of Work similar to scope of this Project.
2. Supervision: Installer shall maintain a competent supervisor at Project while the Work is in progress, and who has not less than 5 years of experience installing products and systems similar to scope of this Project.

1.6 PRE-INSTALLATION CONFERENCE

A. Pre-Installation Conference: Before Work begins, conduct conference at Project site.

1. Participants:

a. Architect.
b. Contractor, including superintendent.
c. Installer, including project manager and supervisor.
d. If requested, Manufacturer's qualified technical representative.
e. Installers of other construction interfaced with Work.

2. Minimum Agenda: Installer shall demonstrate understanding of the Work required by describing detailed procedures for preparing, installing, and cleaning the Work. Demonstration shall include, but not be limited to, following topics:

a. Tour representative areas of Work, inspect and discuss condition of substrate, and other preparatory work performed by other trades.
b. Review Contract Document requirements.
c. Review approved submittals.
d. Review inspection and testing requirements.
e. Review environmental conditions and procedures for coping with unfavorable conditions.
f. Resolve deviations or differences between Contract Documents and the manufacturer's specifications.

3. Record discussions, including decisions and agreements, and prepare report.

1.7 DELIVERY, STORAGE, AND HANDLING

A. Store materials inside under cover and keep them dry and protected against weather, condensation, direct sunlight, construction traffic, and other potential causes of damage. Stack panels flat and supported on risers on a flat platform to prevent sagging.

1.8 PROJECT CONDITIONS

A. Field Measurements: Where products and systems are indicated to fit walls and other construction, verify dimensions by field measurements before fabrication.

B. Exposure Limitation: Exterior gypsum sheathing shall not be exposed to weather for more than 180 days.

1.9 COORDINATION

A. Coordinate installation of products and systems with interfacing and adjoining construction to provide a successful installation without failure.

1. Ensure compatibility of joint treatment components with Air and Water Barrier systems incorporated into project.

1.10 WARRANTY

A. Manufacturer's Warranty: Furnish manufacturer's written material and labor warranty signed by an authorized representative using manufacturer's standard form agreeing to furnish materials and labor required to repair or replace work which exhibits material defects caused by manufacture or design and installation of product. "Defects" is defined to include but not limited to deterioration or failure to perform as required.

1. Warranty Period: Manufacturer shall warrant the products to be free from material and labor defects for a period of 5 years from date of Substantial Completion.

PART 2 - PRODUCTS

2.1 MANUFACTURERS AND PRODUCTS

A. Acceptable Manufacturers and Products: Subject to compliance with requirements of Contract Documents as judged by the Architect, provide product by one of manufacturers listed. If not listed, submit as substitution according to the Conditions of the Contract and Division 01 Section "Substitution Procedures.

B. Basis of Design (Product Standard): Contract Documents are based on products and systems specified to establish a standard of quality. Other available manufacturers offering products having equivalent characteristics may be considered, provided deviations are minor and comply with requirements of Contract Documents as judged by the Architect.

2.2 MATERIALS

A. Single Source Responsibility: Furnish each type of product from single manufacturer. Provide secondary materials only as recommended by manufacturer of primary materials.

B. Exterior Gypsum Sheathing Boards:

1. Generic Type: Glass-mat faced exterior gypsum sheathing board.
2. Material Quality Standard: ASTM C 1177 / C 1177M, Type X.
3. Description: Paperless, treated, water resistant, noncombustible, gypsum core with inorganic glass mat partially or completely embedded on both faces; acrylic coated on one face; 5/8 in (15 mm) thick. Provide in maximum lengths and widths available that will minimize short-edge-to-short-edge butt joints and to correspond to support system indicated.
4. Manufacturers and Products:

    a. CertainTeed Corporation; GlasRoc Sheathing, Type X.
    b. Georgia-Pacific Gypsum LLC; DensGlass Gold Fireguard Type X Sheathing.

c. National Gypsum Company; Gold Bond Brand eXP Fire-Shield Extended Exposure Sheathing.
d. United States Gypsum Company (USG); Securock Firecode Type X Glass-Mat Sheathing.

C. Vertical Cover Boards (Back of Parapet):

1. Generic Type: Glass-mat faced exterior gypsum sheathing board specifically manufactured for use beneath roofing systems.
2. Material Quality Standard: ASTM C 1177 / C 1177M, Type X.
3. Description: Non-combustible moisture-resistant gypsum core with glass-mat facings and a non-asphaltic coating on one face; 5/8 in (15 mm) thick. Provide in maximum lengths and widths available that will minimize short-edge-to-short-edge butt joints and to correspond to support system indicated.
4. Manufacturers and Products:

a. Georgia-Pacific Gypsum LLC; DensDeck Prime.
b. USG; SECUROCK Gypsum-Fiber Roof Board.

D. Horizontal Roof Cover Boards: As specified in Division 07 Section for roofing membrane.

E. Screw Fasteners:

1. Material Quality Standards:

a. Metal Framing Members less than 0.030 in (0.75 mm) Thick: ASTM C 1002, Type S.
b. Metal Framing Members from 0.033 in to 0.112 in (0.79 mm to 2.9 mm) Thick: ASTM C 954, Type S-12.

2. Product Description - Standard Applications: Bugle head, self-drilling, self-tapping, steel screws with Phillips-head recess of size, holding power, and other properties recommended by manufacturer; minimum 1 in (25 mm) long; with corrosion-protective coating having a salt-spray resistance of more than 800 hours according to ASTM B 117.
3. Limitation: Nails and staples are not permitted.

F. Joint Treatment Materials:

1. General: Joint treatment materials shall be acceptable to board manufacturer and air and water barrier system manufacturer for use in sealing joints, and with a history of successful in-service use
2. Sheathing Tape: Self-adhering glass-fiber tape, minimum 2 inches (50 mm) wide, 10 by 10 or 10 by 20 threads/inch (390 by 390 or 390 by 780 threads/m), of type recommended by sheathing and tape manufacturers in sealing joints in glass-mat gypsum sheathing.
3. Air Barrier Membrane Mastic:

a. Description: Single component, liquid-applied, non-asphaltic, vapor permeable rubberized (elastomeric) membrane which cures to a seamless monolithic rubber-like membrane to resist air leakage.
b. Water Vapor Permeance: 25 perms per ASTM E 96, Procedure B.
c. Basis of Design: Confirm compatibility of Air and Water Barrier system.
1) Henry Company; Air-Bloc 31 Liquid Emulsion Vapor Permeable Air Barrier Membrane.

2) Dupont; Tyvek Fluid Applied Flashing and Joint Compound.

PART 3 - EXECUTION

3.1 EXAMINATION

A. Acceptance of Surfaces and Conditions: Examine substrates to receive products and systems and associated work for compliance with requirements and other conditions affecting performance. Proceed only when unsatisfactory conditions have been corrected in a manner complying with Contract Documents. Starting work within a particular area will be construed as acceptance of surface conditions.

3.2 INSTALLATION, GENERAL

A. Installation Quality Standard: In addition to standards listed elsewhere, perform Work according to following, unless otherwise specified:

1. GA-253.
2. ASTM C 1280.
3. Respective manufacturer's written installation instructions.
4. Accepted submittals.
5. Contract Documents.

B. Control of Corrosion: Prevent galvanic action and other forms of corrosion by isolating metals and other materials from direct contact with incompatible materials.

3.3 PREPARATION

A. General: Comply with manufacturer's instructions, recommendations and specifications for cleaning and surface preparation. Surfaces shall have no defects, contaminants, or errors which would result in poor or potentially defective installation or would cause latent defects in Work.

3.4 INSTALLATION

A. Installation of Exterior Gypsum Sheathing Boards[and Back of Parapet Boards].

1. Install boards with coated face out, with panel lengths oriented vertically or horizontally as recommended by manufacturer, with vertical edges centered over flanges of studs, with edges and ends fitted tightly together.
2. Do not install imperfect, damaged, wet, or damp boards.
3. Cut boards at penetrations, edges, and other obstructions of the Work; fit tightly against abutting construction, except provide maximum 3/8 in (10 mm) setback where boards abuts structural elements or materials that may retain moisture.
4. Coordinate installation of boards with flashing and joint treatment so materials are installed in the sequence and manner that prevent exterior moisture from passing through completed exterior wall assembly.
5. Install screws at perimeter and within field to each stud approximately 8 in (200 mm) on centers; set back minimum 3/8 in (10 mm) from edges and ends; apply so screw heads bear tightly against board face but do not cut into facing.
6. Do not bridge building expansion joints with boards; cut and space edges to match spacing of structural support elements.

B. Joint Treatment Installation at Exterior Gypsum Sheathing Boards[and Back of Parapet Boards]:

1. Coordinate installation with applicable Air and Water Barrier system to ensure compatibility of joint treatment.
2. Apply glass-fiber mesh tape to joints between boards.
3. Trowel apply air barrier membrane mastic over the top of glass-fiber mesh tape and at penetrations, openings, and edges where boards terminate at walls, floors, columns, or other structural elements.

3.5 FIELD QUALITY CONTROL

A. Manufacturer's Field Service: Manufacturer's qualified technical representative shall periodically inspect Work to ensure installation is proceeding in accordance with manufacturer's designs, recommendations, instructions, and warranty requirements. Representative shall submit written reports of each visit indicating observations, findings, and conclusions of inspection.

1. Manufacturer's Technical Representative Qualifications: Direct employee of technical services department of manufacturer with experience in providing recommendations, observations, evaluations, and problem diagnostics.

3.6 PROTECTION

A. Procedures: Protect products and systems from damage during installation and remainder of construction period according to manufacturer's instructions. Remove and replace products that are exposed to weather for more than number of days allowed by manufacturer.

END OF SECTION

SECTION 06 4023

INTERIOR ARCHITECTURAL WOODWORK

PART 1 - GENERAL

1.1 SUMMARY

A. Section Includes: Shop-finished interior architectural woodwork and supplementary items necessary for installation.

B. Simulated Stone Countertops: Refer to Division 12 Section "Simulated Stone Countertops" for solid surfacing, quartz agglomerate, or cultured marble countertops incorporated into work specified in this Section. Simulated stone trim is specified in this Section.

1.2 DEFINITIONS

A. Interior architectural woodwork includes wood furring, blocking, shims, and hanging strips for installing woodwork items unless concealed within other construction before woodwork installation.

B. Stair Work and Rails: Rough carriages for stairs are a part of interior architectural woodwork. Platform framing, headers, partition framing, and other rough framing associated with stairwork are specified in Division 06 Section "Miscellaneous Rough Carpentry".

C. Exposed Surfaces, Semi-Exposed Surfaces, Concealed Surfaces, Types of Cabinet Construction, and other related terms are defined in referenced quality standards.

1.3 ACTION SUBMITTALS

A. Product Data: Manufacturer's technical literature for each product and system indicated.

1. Include manufacturer's specifications for materials, finishes, construction details, installation instructions, and recommendations for maintenance.
2. Wood Veneered Items: Include finishing materials and processes.
3. Fire Retardant Treated Wood: Include data for fire-retardant treatment from chemical treatment manufacturer and certification by treating plant that treated materials comply with requirements.

B. Shop Drawings: Show details of fabrication and installation, including plans, elevations, sections, details of components and attachments to other work. Distinguish between shop and field-assembled work.

1. Show details full size.
2. Show locations and sizes of furring, blocking, and hanging strips, including concealed blocking and reinforcement specified in other Sections.
3. Show locations and sizes of cutouts and holes for plumbing fixtures, faucets, soap dispensers, and other items installed in architectural woodwork.

4. Wood Paneling with Transparent Finish: For paneling noted or schedule to be blueprint matched work, show veneer leaves with dimensions, grain direction, exposed face, and identification numbers indicating the flitch and sequence within the flitch for each leaf.

C. Samples for Initial Selection: For each type of product for which a color has not yet been specified, provide manufacturer's color charts consisting of units or sections of units showing the full range of colors available.

D. Samples for Verification:

1. Items with Transparent Finish:

a. Lumber with or for transparent finish, not less than 50 sq. in. (300 sq. cm) or 5 in (125 mm) wide by 24 in (600 mm) long, for each species and cut, finished on 1 side and 1 edge.
b. Veneer leaves representative of and selected from flitches to be used for transparent-finished woodwork.
c. Veneer-faced panel products with or for transparent finish, 8 in by 10 in (200 mm by 250 mm), for each species and cut. Include at least one face-veneer seam and finish as specified.

2. Items with Opaque Finish:

a. Lumber and panel products with shop-applied opaque finish, 50 sq. in. (300 sq. cm) for lumber and 8 in by 10 in (200 mm by 250 mm) for panels, for each finish system and color, with 1/2 of exposed surface finished.

3. Items with Plastic Laminate Finish:

a. Plastic laminates, 8 in by 10 in (200 mm by 250 mm), for each type, color, pattern, and surface finish, with 1 sample applied to core material and specified edge material applied to 1 edge.

4. Simulated Stone Trim: 6 in (150 mm) long.
5. Cabinets:

a. Corner Piece: Cabinet-front frame joints between stiles and rails, as well as exposed end pieces, 18 in (450 mm) high by 18 in (450 mm) wide by 6 in (150 mm) deep.
b. Cabinet Hardware and Accessories: Exposed cabinet hardware and accessories, one unit for each type and finish.
c. Countertops: Section of countertop showing top, front edge, and backsplash construction.

6. Standing and Running Trim: Corner piece showing miter joints.

1.4 INFORMATIONAL SUBMITTALS

A. Manufacturer's Project Acceptance Document: Certification by the manufacturer that its product(s) are approved, acceptable, suitable for use in specific locations, for specific details, and for applications indicated, specified, or required, and that a warranty will be issued.

1. For firms and persons specified in "Quality Assurance" to demonstrate their capabilities and experience. Include list of completed projects.

B. Installer Qualifications:

1. Experience: Installer's personnel with not less than 5 years of experience in the successful performance of Work similar to scope of this Project.
2. Supervision: Installer shall maintain a competent supervisor at Project while the Work is in progress, and who has not less than 5 years of experience installing products and systems similar to scope of this Project.
3. Certification: Certified participant in AWI's Quality Certification Program or licensee of WI's Certified Compliance Program.

C. Source Limitations for Wood Veneered Items: Engage a qualified woodworking firm to assume undivided responsibility for production of interior architectural woodwork with sequence-matched wood veneers and wood doors with face veneers that are sequence matched with woodwork.

D. Quality Standard: Unless otherwise indicated, comply with "Architecural Woodwork Standards" for standards and for grades of interior architectural woodwork indicated for construction, finish, installation and other requirements:

1. Provide manufacturer certification indicating that woodwork complies with requirements of referenced quality standards.
2. Provide AWI Quality Certification Program labels and certificates indicating that woodwork, including installation, complies with requirements of grades specified.
3. Provide WI-certified compliance labels and certificates indicating that woodwork, including installation, complies with requirements of grades specified.
4. The Contract Documents contain selections chosen from options in the quality standard and additional requirements beyond those of the quality standard. Comply with such selections and requirements in addition to the quality standard.

E. Fire-Test-Response Characteristics: Where fire-retardant materials or products are indicated or required, provide materials and products with specified fire-test-response characteristics as determined by testing identical products per test method indicated by UL, ITS, or another testing and inspecting agency acceptable to authorities having jurisdiction. Identify with appropriate markings of applicable testing and inspecting agency in the form of separable paper label or, where required by authorities having jurisdiction, imprint on surfaces of materials that will be concealed from view after installation.

F. Mock-ups: Prior to fabrication and installation, build mock-up for each form of construction and finish required to verify selections made under sample Submittals and to demonstrate aesthetic effects and qualities of materials and execution. Build mock-up using materials indicated for the completed Work.

1. Build mock-up in the location and of the size indicated or, if not indicated, as directed by Architect. Contractor shall provide structural support framework.

    a. Show typical components, attachments to building structure, and requirements of installation.

2. Notify Architect seven days in advance of the dates and times when mock-up will be installed.

3. Obtain Architect's acceptance of mock-ups before starting fabrication or installation.
4. Acceptance of mock-ups does not constitute acceptance of deviations from the Contract Documents contained in mock-ups unless such deviations are specifically noted by Contractor and accepted by Architect in writing.
5. Demolish and remove mock-ups when directed by Architect unless accepted to become part of the completed Work.

G. Mock-ups, Cabinets:

1. One full-size sample of finished base cabinet unit complete with hardware, doors, and drawers, but exclusive of countertop.
2. One full-size sample of finished wall-mounted cabinet unit complete with hardware, doors, and adjustable shelves.
3. Accepted sample units will be used as a standard for judging the completed work. Unless otherwise directed, accepted sample units may be incorporated in work. If not incorporated in work, retain accepted sample units at Project site until completion of work and remove sample units from premises when directed by Architect.

1.5 PRE-INSTALLATION CONFERENCE

A. Pre-Installation Conference: Before Work begins, conduct conference at Project site.

1. Participants:

a. Architect.
b. Contractor, including superintendent.
c. Installer, including project manager and supervisor.
d. If requested, Manufacturer's qualified technical representative.
e. Installers of other construction interfaced with Work.

2. Minimum Agenda: Installer shall demonstrate understanding of the Work required by describing detailed procedures for preparing, installing, and cleaning the Work. Demonstration shall include, but not be limited to, following topics:

a. Tour representative areas of Work, inspect and discuss condition of substrate, and other preparatory work performed by other trades.
b. Review Contract Document requirements.
c. Review approved submittals.
d. Review inspection and testing requirements.
e. Review environmental conditions and procedures for coping with unfavorable conditions.
f. Resolve deviations or differences between Contract Documents and the manufacturer's specifications.

3. Record discussions, including decisions and agreements, and prepare report.

1.6 DELIVERY, STORAGE, AND HANDLING

A. Do not deliver woodwork until painting and similar operations that could damage woodwork have been completed in installation areas. If woodwork must be stored in other than installation areas, store only in areas where environmental conditions comply with requirements specified in "Project Conditions" Article.

1.7 PROJECT CONDITIONS

A. Environmental Limitations: Do not deliver or install woodwork until building is enclosed, wet work is complete, and HVAC system is operating and maintaining temperature and relative humidity at occupancy levels during the remainder of the construction period.

B. Field Measurements: Where products and systems are indicated to fit walls and other construction, verify dimensions by field measurements before fabrication.

1. Locate concealed framing, blocking, and reinforcements that support woodwork by field measurements before being enclosed, and indicate measurements on Shop Drawings.

1.8 COORDINATION

A. Coordinate installation of products and systems with interfacing and adjoining construction to provide a successful installation without failure.

B. Coordinate Shop Drawings and fabrication with hardware requirements.

PART 2 - PRODUCTS

2.1 MANUFACTURERS AND PRODUCTS

A. Acceptable Manufacturers and Products: Subject to compliance with requirements of Contract Documents as judged by the Architect, provide product by one of manufacturers listed. If not listed, submit as substitution according to the Conditions of the Contract and Division 01 Section "Substitution Procedures".

B. Basis of Design (Product Standard): Contract Documents are based on products and systems specified to establish a standard of quality. Other manufacturers offering products having equivalent characteristics may be considered, provided deviations are minor and comply with requirements of Contract Documents as judged by the Architect.

2.2 MATERIALS, GENERAL

A. Single Source Responsibility: Furnish each type of product from single manufacturer. Provide secondary materials only as recommended by manufacturer of primary materials.

B. Provide materials that comply with requirements of "Architectural Woodwork Standards" quality standard for each type of woodwork and quality grade specified, unless otherwise indicated.

2.3 MATERIALS

A. Wood Species and Cut for Transparent Finish:

1. Selections: As scheduled or as indicated in Design Selections.

B. Wood Species for Opaque Finish: Any closed-grain hardwood unless indicated otherwise.

C. Fire Retardant Wood Products for Paneling:

1. Medium-Density Fiberboard: ANSI A208.2, Grade MD.
2. Particleboard: ANSI A208.1, Industrial Grade M-2, 43 pcf (689 kgm3) Density.
3. Veneer-Faced Panel Products (Hardwood Plywood): HPVA HP-1.

D. Wood Products for Cabinets:

1. Hardboard for Vertical Dividers Only: AHA A135.4, tempered, smooth two sides, 1/4 in (6 mm) minimum thickness unless indicated otherwise.
2. Medium-Density Fiberboard: ANSI A208.2, Grade MD.
3. Veneer-Faced Panel Products (Hardwood Plywood): HPVA HP-1.
4. Softwood Plywood: DOC PS 1.

E. High-Pressure Decorative Laminate: NEMA LD 3, grades as indicated or, if not indicated, as required by woodwork quality standard.

1. Fire-Rated Laminates: Where indicated or scheduled; NEMA LD 3, grades as follows:

a. Vertical Surfaces: General Purpose Type 604 (VGF), 0.032 in (0.79 mm) thick.
b. Horizontal Surfaces: General Purpose Type 605 (HGF) 0.048 in (1.2 mm) thick.

2. Manufacturers:

a. Formica Corporation.
b. International Paper.
c. Lamin-Art, Inc.
d. Nevamar Company, LLC; Decorative Products Div.
e. Pioneer Plastics Corp.
f. Westinghouse Electric Corp.; Specialty Products Div.
g. Wilsonart International; Div. of Premark International, Inc.

3. Colors, Patterns, and Finishes:

a. Selections: As scheduled or as indicated in Design Selections.

F. Chemical-Resistant, High-Pressure Decorative Laminate: NEMA LD 3, Grade HGP, and as follows:

1. Laminate has the following ratings when tested with indicated reagents according to NEMA LD 3, Test Procedure 3.9.5:

a. Nitric Acid (30 Percent): Moderate effect.
b. Sulfuric Acid (77 Percent): Moderate effect.
c. Hydrochloric Acid (37 Percent): Moderate effect.
d. Phosphoric Acid (75 Percent): No effect.
e. Acetic Acid (98 Percent): No effect.
f. Formaldehyde: No effect.
g. Ethyl Acetate: No effect.
h. Ethyl Ether: No effect.
i. Phenol (85 Percent): Moderate effect.
j. Benzene: No effect.
k. Xylene: No effect.
l. Butyl Alcohol: No effect.

m. Furfural: No effect.
n. Methyl Ethyl Ketone: No effect.
o. Sodium Hydroxide (25 Percent): No effect.
p. Sodium Sulfide (15 Percent): No effect.
q. Ammonium Hydroxide (28 Percent): No effect.
r. Zinc Chloride: No effect.
s. Gentian Violet: No effect.
t. Methyl Red: No effect.

2. Manufacturers and Products:

a. Formica Corporation; Lab Grade 840 Black.
b. Panolam Industries International Incorporated; Pionite Chemguard.
c. Wilsonart International, Div. of Premark International, Inc.; Chemsurf.

3. Colors, Patterns, and Finishes:

a. Selections: As scheduled or as indicated in Design Selections.

G. PVC Laminate: Fire-retardant acrylic/PVC sheet covered in a decorative rigid PVC veneer, 0.040 in (1 mm) thick.

1. Manufacturer and Product: Spectrim; Ven4ma.
2. Colors, Patterns, and Finishes:

a. Selections: As scheduled or as indicated in Design Selections.

H. Simulated Stone Trim:

1. Solid Surface Material: Homogeneous solid pieces of filled plastic resin complying with ANSI SS1.

a. Manufacturers:

1) Avonite Surfaces.
2) E. I. du Pont de Nemours and Company.
3) Formica Corporation.
4) LG Chemical, Ltd.
5) Meganite Inc.
6) Samsung Chemical USA, Inc.
7) Swan Corporation (The).
8) Transolid, Inc.
9) Wilsonart International.

2. Quartz Agglomerate: Solid pieces consisting of quartz aggregates bound together with a matrix of filled plastic resin and complying with the "Physical Characteristics of Materials" Article of ANSI SS1.

a. Manufacturers:

1) Cambria.
2) Cosentino USA.

3) E. I. du Pont de Nemours and Company.
4) LG Chemical, Ltd.
5) Meganite Inc.
6) Samsung Chemical USA, Inc.
7) Technistone USA, Inc.
8) Transolid, Inc.

3. Colors, Patterns, and Finishes:

a. Selections: As scheduled or as indicated in Design Selections.

2.4 FIRE-RETARDANT-TREATED MATERIALS

A. General: Where fire-retardant-treated materials are indicated or required, use materials complying with requirements in this Article, that are acceptable to authorities having jurisdiction, and with fire-test-response characteristics specified.

1. Do not use treated materials that do not comply with requirements of referenced woodworking standard or that are warped, discolored, or otherwise defective.
2. Use fire-retardant-treatment formulations that do not bleed through or otherwise adversely affect finishes. Do not use colorants to distinguish treated materials from untreated materials.
3. Identify fire-retardant-treated materials with appropriate classification marking of UL, U.S. Testing, Timber Products Inspection, or another testing and inspecting agency acceptable to authorities having jurisdiction.

B. Fire-Retardant-Treated Lumber and Plywood by Pressure Process: Comply with performance requirements of AWPA C20 (lumber) and AWPA C27 (plywood). Use the following treatment types:

1. Exterior Type: Organic-resin-based formulation thermally set in wood by kiln drying.
2. Interior Type A: Low-hygroscopic formulation.
3. Mill lumber before treatment and implement special procedures during treatment and drying processes that prevent lumber from warping and developing discolorations from drying sticks or other causes, marring, and other defects affecting appearance of treated woodwork.
4. Kiln-dry materials before and after treatment to levels required for untreated materials.

C. Fire-Retardant Particleboard: Panels complying with the following requirements, made from softwood particles and fire-retardant chemicals mixed together at time of panel manufacture to achieve flame-spread index of 25 or less and smoke-developed index of 25 or less per ASTM E 84.

D. Fire-Retardant Fiberboard: Medium-density fiberboard panels complying with ANSI A208.2, made from softwood fibers, synthetic resins, and fire-retardant chemicals mixed together at time of panel manufacture to achieve flame-spread index of 25 or less and smoke-developed index of 200 or less per ASTM E 84.

2.5 CABINET HARDWARE AND ACCESSORIES

A. General: Provide cabinet hardware and accessory materials associated with architectural cabinets, except for items specified in Division 08 Section "Door Hardware (Scheduled by Describing Products)."

B. Hinges: Provide number of hinges recommended by hinge manufacturer for size and weight of door.

C. Butt Hinges: 2-3/4 in (69 mm), 5-knuckle steel hinges made from 0.095 in (2.4 mm) thick metal, and as follows:

1. Semi-concealed Hinges for Flush Doors: BHMA A156.9, B01361.
2. Semi-concealed Hinges for Overlay Doors: BHMA A156.9, B01521.

D. Frameless Concealed Hinges (European Type): BHMA A156.9, B01602,

1. Product Standard: Grass, "Tiomos 120 Series", 120 degree swing, self-closing from 10 deg.

E. Back-Mounted Pulls: BHMA A156.9, B02011.

F. Wire Pulls: Back mounted, solid metal, 4 in (100 mm) long, 5/16 in (8 mm) in diameter.

1. Product Standard: EPCO-MC-402-4, 4 in (100 mm) center to center of screws, 1-5/16 in (34 mm) projection, 5/16 in (8 mm) diameter. Stainless steel.

G. Catches: Magnetic catches, BHMA A156.9, B03141.

H. Adjustable Shelf Standards and Supports: BHMA A156.9, B04071; with shelf rests, B04081.

I. Shelf Rests: BHMA A156.9, B04013; metal.

1. Product Standard: K & V No. 345, nickel plated.

J. Drawer Slides: BHMA A156.9, B05091.

1. Heavy Duty (Grade 1HD-100 and Grade 1HD-200): Side mounted; full-extension type; zinc-plated steel ball-bearing slides.
2. Box Drawer Slides: Grade 1HD-100; for drawers not more than 6 in (150 mm) high and 24 in (600 mm) wide.

a. Product Standard for 24 in (600 mm) Wide and Less: Full extension; Accuride "7434".
b. Product Standard for Wider than 24 in (600 mm): Full extension; Accuride "7432".

3. File Drawer Slides: Grade 1HD-200; for drawers more than 6 in (150 mm) high or 24 in (600 mm) wide.

a. Product Standard for 42 in (1050 mm) Wide and Less: Full extension with 1 in (25 mm) over travel; Accuride "3640".

4. Pencil Drawer Slides: Grade 1; for drawers not more than 3 in (75 mm) high and 24 in (600 mm) wide.

a. Product Standard for 16 in (400 mm) Wide and Less: Low profile, 75 lb (34 kg) load rating (at 2/3 travel), full extension; Accuride "2632".

b. Keyboard Slides: Grade 1HD-100; for computer keyboard shelves.

c. Product Standard for Slides Only, 16 in (400 mm) Wide and Less: Adjustable height, 75 lb (34 kg) load rating; Accuride "2109".
d. Product Standard for Slides and Tray: Fixed tilt, adjustable height; Accuride "Cbergo-Tray 200".
e. Product Standard for Slides, Tray and Accessories: Adjustable tilt, adjustable height, cable management, palm rest, and mouse pad; Accuride "Cbergo-Tray 300".

5. Trash Bin Slides: Grade 1HD-200; for trash bins not more than 20 in (500 mm) high and 16 in (400 mm) wide.

K. Aluminum Slides for Sliding Glass Doors: BHMA A156.9, B07063.

L. Door Locks: BHMA A156.11, E07121.

1. Product Standard: K & V No. 984, nickel plated.

M. Drawer Locks: BHMA A156.11, E07041.

1. Product Standard: K & V No. 986, nickel plated.

N. Sliding Door Locks:

1. Product Standard: K & V No. 984, nickel plated.

O. Grommets for Cable Passage through Countertops: Molded-plastic grommets and matching plastic caps with slot for wire passage.

1. Size: 1-1/4 in (32-mm) or 2 in (50 mm) OD as indicated.
2. Color: Brown or black as indicated.
3. Product Standards: Doug Mockett & Company, Inc "OG or SG Series" or Hafele 429.93.

P. Concealed Pocket Door Slides (Vertical Swing/Slide/Retract):

1. Description: Side mounted flipper door slide assembly suitable for recessed full overlay door, 42 in (1050 mm) high and less, 30 lb (14 kg) load rating, into concealed pocket within cabinet, painted steel slides with all steel ball bearings.
2. Product Standard: Accuride – "1321".

Q. Exposed Hardware Finishes: For exposed hardware, provide finish that complies with BHMA A156.18 for BHMA finish number indicated.

1. Satin Stainless Steel: BHMA 630, unless otherwise indicated.

R. For concealed hardware, provide manufacturer's standard finish that complies with product class requirements in BHMA A156.9.

1. Table Legs:

a. Product Standard: Richelieu; Round Table Legs, Product UC250175, 28 in (711.2 mm) long by 2-1/2 in (62 mm) diameter steel table leg with satin chrome finish.

S. Tackable Wall Surface: Refer to Division 09 Section "Fabric Wrapped Panels".

2.6 MISCELLANEOUS MATERIALS

A. Furring, Blocking, Shims, and Hanging Strips: Fire-retardant-treated softwood lumber, kiln dried to less than 15 percent moisture content.

B. Anchors: Select material, type, size, and finish required for each substrate for secure anchorage. Provide nonferrous-metal or hot-dip galvanized anchors and inserts on inside face of exterior walls and elsewhere as required for corrosion resistance. Provide toothed-steel or lead expansion sleeves for drilled-in-place anchors.

C. Adhesives:

1. General: As recommended by woodwork fabricator to suit application.
2. VOC Limits for Installation Adhesives and Glues: Use installation adhesives that comply with the following limits for VOC content when calculated according to 40 CFR 59, Subpart D (EPA Method 24) unless indicated otherwise:

   a. Wood Glues: 30 g/L.
   b. Contact Adhesive: 250 g/L.

3. Adhesive for Bonding Plastic Laminate Faces and Edges: PVA as recommended by woodwork fabricator to suit application.

D. Hanging Clips: Provide manufacturer's standard nonferrous-metal or hot-dip galvanized zee hanging clips.

2.7 FABRICATION, GENERAL

A. Interior Woodwork Grade: Unless otherwise indicated, provide Premium Grade interior woodwork complying with referenced quality standard.

B. Wood Moisture Content: Comply with requirements of referenced quality standard for wood moisture content in relation to ambient relative humidity during fabrication and in installation areas.

C. Fire Retardant Treated Wood: Sand fire-retardant-treated wood lightly to remove raised grain on exposed surfaces before fabrication.

D. Fabricate woodwork to dimensions, profiles, and details indicated. Ease edges to radius indicated for the following:

1. Corners of Cabinets and Edges of Solid-Wood (Lumber) Members 3/4 in (19 mm) Thick or Less: 1/16 in (1.5 mm).
2. Edges of Rails and Similar Members More Than 3/4 in (19 mm) Thick: 1/8 in (3 mm).

E. Complete fabrication, including assembly, finishing, and hardware application, to maximum extent possible before shipment to Project site. Disassemble components only as necessary for shipment and installation. Where necessary for fitting at site, provide ample allowance for scribing, trimming, and fitting.

1. Notify Architect seven days in advance of the dates and times woodwork fabrication will be complete.
2. Trial fit assemblies at fabrication shop that cannot be shipped completely assembled. Install dowels, screws, bolted connectors, and other fastening devices that can be removed after trial fitting. Verify that various parts fit as intended and check measurements of assemblies against field measurements indicated on Shop Drawings before disassembling for shipment.

F. Shop-cut openings to maximum extent possible to receive hardware, appliances, plumbing fixtures, electrical work, and similar items. Locate openings accurately and use templates or roughing-in diagrams to produce accurately sized and shaped openings. Sand edges of cutouts to remove splinters and burrs.

1. Countertops: Seal edges of openings in countertops.

G. Install glass to comply with applicable requirements in Division 08 Section "Glazing" and in GANA's "Glazing Manual". For glass in wood frames, secure glass with removable stops.

2.8 PLASTIC-LAMINATE CABINETS

A. Grade: Premium.

B. AWI Type of Cabinet Construction: Flush overlay unless indicated otherwise.

C. Laminate Cladding for Exposed Surfaces: High-pressure decorative laminate complying with the following requirements:

1. Horizontal Surfaces Other Than Tops: Grade HGP, .038 in (1 mm) thick.
2. Postformed Surfaces: Grade HGP, .038 in (1 mm) thick.
3. Doors and Vertical Surfaces: Grade VGS, .028 in (0.7 mm) thick.
4. Edges: PVC Edge Banding, 0.12 in (3 mm) thick, matching laminate in color, pattern, and finish.
5. Edges: Grade HGS, .048 in (1.2 mm) thick.

D. Semi-exposed Surfaces: Provide surface materials indicated below:

1. Surfaces Other Than Drawer Bodies: High-pressure decorative laminate, Grade CLS, .020 in (0.5 mm) thick.
2. Edges: PVC Edge Banding, .038 in (1 mm) thick, matching laminate in color, pattern, and finish.
3. Drawer Sides, Backs and Sub-Fronts: 1/2 in (12 mm) minimum thickness, as indicated.

    a. Solid-hardwood lumber.

4. Drawer Bottoms: 1/4 in (6 mm) minimum thickness, as indicated.

a. Hardwood plywood with veneer core.
b. High pressure decorative laminate with veneer core plywood.

5. Drawer Box Construction: One of the following:

a. Glued multiple dovetail.
b. Glued French dovetail.
c. Glued and doweled.

6. Interior Drawer Box Finish, as indicated:

a. Clear catalyzed polyurethane.
b. High-pressure decorative laminate, Grade CLS, .020 in (0.5 mm) thick.

E. Body Members (Ends, Divisions, Bottoms and Sub-Tops): Medium-density fiberboard, 3/4 in (19 mm) minimum thickness.

F. Face Frames, Rails, Kicks and Bases: Solid-hardwood lumber or hardwood plywood, 3/4 in (19 mm) thick minimum thickness.

G. Face Frames and Rails: Solid-hardwood lumber or hardwood plywood, 3/4 in (19 mm) thick minimum thickness.

H. Kicks and Bases: Solid-hardwood lumber, 1 1/2 (38 mm) thick minimum thickness.

I. Shelves: Hardwood plywood with veneer core with the following thickness:

1. For Spans Up To 32 in (800 mm): 3/4 in (19 mm).
2. For Spans Up To 42 in (1050 mm): 1 in (25 mm).

J. Drawer Fronts: Medium density fiberboard, 3/4 in (19 mm) thick minimum thickness.

K. Doors:

1. Hinged Flush Type: Medium density fiberboard with minimum thickness of 3/4 in (19 mm).

a. Maximum cabinet door size: 24 in (600 mm) width and 84 in (2100 mm) height.
b. Maximum cabinet door size: 20 in (500 mm) width and 84 in (2100 mm) height.
c. For Doors Larger than Sizes Above: 1-3/8 in (35 mm) or 1-3/4 in (45 mm) doors; refer to Division 08 Section "Flush Wood Doors".
d. If hinge screws enter only edge of door, provide 3/4 in (19 mm) lumber edges glued to core prior to laminating.

2. Sliding Flush Type: As required by referenced quality standard for grade specified.
3. Stile and Rail Type: As required by referenced quality standard for grade specified.

L. Concealed Backs of Panels with Exposed Plastic Laminate Surfaces: High-pressure decorative laminate, Grade BKL, .020 in (0.5 mm) thick.

M. Concealed Edges of Base Cabinet Panels: Including but not limited to floors, vertical edges, splashes and countertops; Clear Catalyzed Polyurethane.

2.9 PLASTIC-LAMINATE COUNTERTOPS

A. Grade: Premium.

B. High-Pressure Decorative Laminate Grade:

1. High-Pressure Decorative Laminate Grade for Flat Countertops: Grade HGS, .048 in (1.2 mm) thick.
2. High-Pressure Decorative Laminate Grade for Post-formed Countertops: Grade HGP, .038 in (1.0 mm) thick.

C. Grain Direction for Wood Grain Laminates: Parallel to cabinet fronts.

D. Edge Treatment: PVC edge banding, 0.12 in (3 mm) thick, matching laminate in color, pattern, and finish, as indicated.

E. Core Material for Countertops: Medium-density fiberboard made with exterior glue, 3/4 in (19 mm) thick minimum thickness.

F. Core Material for Side and Back Splashes: Medium-density fiberboard made with exterior glue, 1/2 in (13 mm) thick minimum thickness.

G. Backer Sheet: Provide plastic-laminate backer sheet, Grade BKL, .020 in (0.5 mm) thick, on underside of countertop substrate.

H. Concealed Backs and Edges at Side and Back Splashes: High-pressure decorative laminate, Grade BKL, .020 in (0.5 mm) thick.

2.10 SOLID SURFACING COUNTERTOPS

A. Refer to Division 12 Section "Simulated Stone Countertops".

2.11 QUARTZ AGGLOMERATE COUNTERTOPS

A. Refer to Division 12 Section "Simulated Stone Countertops".

2.12 CLOSET AND UTILITY SHELVING

A. Grade: Custom.

B. Shelf Material: 3/4 in (19 mm) solid lumber or veneer-faced panel product with solid-lumber edge.

C. Cleats: 3/4 in (19 mm) solid lumber.

2.13 SHOP FINISHING

A. Grade: Provide finishes of same grades as items to be finished.

B. General: Finish architectural woodwork at fabrication shop as specified in this Section. Defer only final touchup, cleaning, and polishing until after installation.

C. Shop Priming: Shop apply the prime coat including backpriming, if any, for items specified to be field finished. Refer to Division 09 Painting Sections for material and application requirements.

D. Preparation for Finishing: Comply with referenced quality standard for sanding, filling countersunk fasteners, sealing concealed surfaces, and similar preparations for finishing architectural woodwork, as applicable to each unit of work.

1. Backpriming: Apply one coat of sealer or primer, compatible with finish coats, to concealed surfaces of woodwork. Apply two coats to back of paneling and to end-grain surfaces. Concealed surfaces of plastic-laminate-clad woodwork do not require backpriming when surfaced with plastic laminate.

E. Finish:

1. Selections: As scheduled or as indicated in Design Selections.

PART 3 - EXECUTION

3.1 EXAMINATION

A. Acceptance of Surfaces and Conditions: Examine substrates to receive interior architectural woodwork and associated work to which interior architectural woodwork will be applied for compliance with requirements and other conditions affecting performance. Proceed only when unsatisfactory conditions have been corrected in a manner complying with Contract Documents. Starting work within a particular area will be construed as acceptance of surface conditions.

3.2 INSTALLATION, GENERAL

A. Installation Quality Standards: In addition to standards listed elsewhere, perform Work according to following, unless otherwise specified:

1. Quality standards. (The Contract Documents contain selections chosen from options in the quality standard and additional requirements beyond those of the quality standard. Comply with such selections and requirements in addition to the quality standard.)
2. Respective manufacturer/fabricator's written installation instructions.
3. Accepted submittals.
4. Contract Documents.

3.3 PREPARATION

A. General: Comply with manufacturer's instructions, recommendations, and specifications for cleaning and surface preparation. Surfaces shall have no defects, contaminants, or errors which would result in poor or potentially defective installation or would cause latent defects in Work.

B. Before installation, condition woodwork to average prevailing humidity conditions in installation areas.

C. Before installing architectural woodwork, examine shop-fabricated work for completion and complete work as required, including removal of packing and backpriming.

3.4 INSTALLATION

A. Assemble woodwork and complete fabrication at Project site to comply with requirements for fabrication, to extent that it was not completed in the shop.

B. Install woodwork level, plumb, true, and straight. Shim as required with concealed shims. Install level and plumb (including tops) to a tolerance of 1/8 in per 96 in (3 mm per 2400 mm).

C. Scribe and cut woodwork to fit adjoining work, refinish cut surfaces, and repair damaged finish at cuts.

D. Anchor woodwork to anchors or blocking built in or directly attached to substrates. Secure with countersunk, concealed fasteners and blind nailing as required for complete installation. Use fine finishing nails or finishing screws for exposed fastening, countersunk and filled flush with woodwork and matching final finish if transparent finish is indicated.

E. Cabinets, General: Install without distortion so doors and drawers fit openings properly and are accurately aligned. Adjust hardware to center doors and drawers in openings and to provide unencumbered operation. Complete installation of hardware and accessory items as indicated.

1. Install cabinets with no more than 1/8 in per 96 in (3 mm per 2400 mm) sag, bow, or other variation from a straight line.

F. Base and Wall Cabinets: Set base cabinets straight, level, and plumb. Adjust subtops within 1/16 in (1.5 mm) of a single plane. Fasten base cabinets to partition framing, or reinforcements in partitions with fasteners spaced 24 in (600 mm) on center. Bolt adjacent cabinets together with joints flush, tight, and uniform.

1. Where base cabinets are not installed adjacent to walls, fasten to floor at toe space with fasteners spaced 24 in (600 mm) on center. Secure sides of cabinets to floor, where they do not adjoin other cabinets, with not less than two fasteners.
2. Wall Cabinets: Fasten wall cabinets through back, near top and bottom, at ends and not more than 16 in (400 mm) on center with No. 10 wafer-head sheet metal screws through metal backing or metal framing behind wall finish or toggle bolts through metal backing or metal framing behind wall finish.

G. Countertops: Anchor securely by screwing through corner blocks of base cabinets or other supports into underside of countertop.

1. Where possible make field jointing in the same manner as shop jointing, using dowels, splines, adhesives, and fasteners recommended by manufacturer. Prepare edges to be joined in shop so Project-site processing of top and edge surfaces is not required. Locate field joints where shown on Shop Drawings.

2. Plastic Laminate Countertops: Secure field joints in plastic-laminate countertops with concealed clamping devices located within 6 in (150 mm) of front and back edges and at intervals not exceeding 24 in (600 mm). Tighten according to manufacturer's written instructions to exert a constant, heavy-clamping pressure at joints.
3. Abut top and edge surfaces in one true plane, with internal supports placed to prevent deflection.
4. Simulated Stone Countertops: Refer to Division 12 Section "Simulated Stone Countertops".
5. Install countertops with no more than 1/8 in per 96 in (3 mm per 2400 mm) sag, bow, or other variation from a straight line.
6. Secure backsplashes to tops with concealed metal brackets at 16 in (400 mm) on center and to walls with adhesive.
7. Calk space between backsplash and wall with sealant specified in Division 07 Section "Joint Sealants".

H. Touch up finishing work specified in this Section after installation of woodwork. Fill nail holes with matching filler where exposed.

3.5 ADJUSTING AND CLEANING

A. Repair damaged and defective woodwork, where possible, to eliminate functional and visual defects; where not possible to repair, replace woodwork. Adjust joinery for uniform appearance.

B. Clean, lubricate, and adjust hardware.

C. Clean woodwork on exposed and semi-exposed surfaces. Touch up shop-applied finishes to restore damaged or soiled areas.

END OF SECTION

SECTION 07 1352

MODIFIED BITUMINOUS SHEET WATERPROOFING

PART 1 - GENERAL

1.1 SUMMARY

A. Section Includes: Modified bituminous sheet waterproofing system and supplementary items necessary for installation at the following applications:

1. Vertical positive side applications at foundation walls.
2. Horizontal positive side applications at above grade split slabs.
3. Horizontal positive side applications at earth covered horizontal decks.

1.2 ACTION SUBMITTALS

A. Product Data: Manufacturer's technical literature for each product or system indicated.

1. Include manufacturer's specifications for materials and installation instructions.
2. Include manufacturer's written instructions for evaluating, preparing, and treating substrate.

B. Shop Drawings: Show details of fabrication and installation, including plans, elevations, sections, details of components and attachments to other work. Distinguish between shop and field-assembled work. Include in shop drawings substrate joint and crack treatments, waterproofing applications, flashings, penetrations, inside and outside corners, tie-ins with adjoining waterproofing, and other termination conditions.

1.3 INFORMATIONAL SUBMITTALS

A. Manufacturer's Project Acceptance Document: Certification by the manufacturer that its product(s) are approved, acceptable, suitable for use in specific locations, for specific details, and for applications indicated, specified, or required, and that a warranty will be issued.

B. Product Test Reports: Written reports based on evaluation of comprehensive tests performed by qualified testing agency indicating that each product complies with requirements.

C. Field Quality Control Reports: Written report of testing and inspection required by "Field Quality Control".

D. Pre-Construction Test Report: Written reports of manufacturer's testing required by "Quality Assurance" Article.

E. Qualification Data:

1. For firms and persons specified in "Quality Assurance" to demonstrate their capabilities and experience. Include list of completed projects.

F. Warranty: Sample of warranty.

1. Provide manufacturer's written warranty covering materials and installation (labor) stating obligations, remedies, limitations and exclusions.

1.4 QUALITY ASSURANCE

A. Manufacturer Qualifications: Manufacturer with not less than 5 years of experience in the successful production and in-service performance of products and systems similar to scope of this Project.

B. Installer Qualifications:

1. Experience: Installer's personnel with not less than 5 years of experience in the successful performance of Work similar to scope of this Project.
2. Supervision: Installer shall maintain a competent supervisor at Project while the Work is in progress, and who has not less than 5 years of experience installing products and systems similar to scope of this Project.
3. Manufacturer Acceptance: Installer shall be certified, approved, licensed, or acceptable to manufacturer to install products.

C. Mock-Ups: Before beginning Work of this Section, install minimum 100 sf (9.3 sm) of waterproofing system using materials indicated for the completed Work; incorporating substrate construction, sealing at penetrations, and seaming to demonstrate installation of system. Acceptance of mock-ups does not constitute acceptance of deviations from the Contract Documents contained in mock-ups unless such deviations are specifically accepted by Architect in writing. Apply mock-ups to set quality standards for materials and execution.

1. Demonstrate surface preparation, crack, joint, and corner treatments.
2. If Architect determines mock-up does not comply with requirements, reconstruct mock-ups until accepted.
3. Accepted mock-ups may become part of completed Work if undisturbed at time of Substantial Completion.

D. Pre-Construction Subsoil Water Testing:

1. General Requirements: Test subsoil water for compatibility with waterproofing materials.
2. Test Method: Use manufacturer's standard test method to test for acids, alkalis, brine, or other contaminants that may inhibit performance of waterproofing materials.
3. Specimen Quantity: Obtain and submit as many subsoil water samples required from Project at approximate locations where waterproofing will be installed.
4. Reports: Interpret test results and certify reports indicating requirements for use of waterproofing materials and for corrective measures necessary.

1.5 PRE-INSTALLATION CONFERENCE

A. Pre-Installation Conference: Before Work begins, conduct conference at Project site.

1. Participants:

a. Architect.
b. Contractor, including superintendent.
c. Installer, including project manager and supervisor.
d. If requested, Manufacturer's qualified technical representative.
e. Installers of other construction interfaced with Work.

2. Minimum Agenda: Installer shall demonstrate understanding of the Work required by describing detailed procedures for preparing, installing, and cleaning the Work. Demonstration shall include, but not be limited to, following topics:

    a. Tour representative areas of Work, inspect and discuss condition of substrate, and other preparatory work performed by other trades.
    b. Review Contract Document requirements.
    c. Review approved submittals.
    d. Review inspection and testing requirements.
    e. Review environmental conditions and procedures for coping with unfavorable conditions.
    f. Resolve deviations or differences between Contract Documents and the manufacturer's specifications.

3. Record discussions, including decisions and agreements, and prepare report.

1.6 DELIVERY, STORAGE, AND HANDLING

A. Deliver liquid materials to Project site in original packages with seals unbroken, labeled with manufacturer's name, product brand name and type, date of manufacture, and directions for storing and mixing with other components.

B. Store liquid materials in their original undamaged packages in a clean, dry, protected location and within temperature range required by waterproofing manufacturer.

C. Remove and replace liquid materials that cannot be applied within their stated shelf life.

D. Store rolls according to manufacturer's written instructions.

E. Protect stored materials from direct sunlight.

1.7 PROJECT CONDITIONS

A. Environmental Limitations: Apply waterproofing within the range of ambient and substrate temperatures recommended by manufacturer. Do not apply waterproofing to a damp or wet substrate or during high humidity conditions including snow, rain, fog, or mist.

1.8 COORDINATION

A. Coordinate installation of products and systems with interfacing and adjoining construction to provide a successful installation without failure.

1.9 WARRANTY

A. Manufacturer's Warranty: Furnish manufacturer's written material and labor warranty signed by an authorized representative using manufacturer's standard form agreeing to furnish materials and labor required to repair or replace work which exhibits material defects caused by manufacture or design and installation of product. "Defects" is defined to include but not limited to deterioration or failure to perform as required.

1. Warranty Period: Manufacturer shall warrant the products to be free from material and labor Defects for a period of 10 years form date of Substantial Completion.
2. Include Work provided under Division 07 Section "Pre-Applied Sheet Waterproofing" in

warranty.

B. Installer's Warranty: Furnish installer's written workmanship warranty signed by an authorized representative using installer's standard form agreeing to provide labor required to repair or replace work which exhibits workmanship defects. "Defects" is defined to include but not limited to deterioration or failure to perform as required.

1. Warranty Period: Installer shall warrant the installation to be free from workmanship Defects for a period of 2 years from date of Substantial Completion.

PART 2 - PRODUCTS

2.1 MANUFACTURERS AND PRODUCTS

A. Acceptable Manufacturers and Products: Subject to compliance with requirements of Contract Documents as judged by the Architect, provide product by one of manufacturers listed. If not listed, submit as substitution according to the Conditions of the Contract and Division 01 Section "Substitution Procedures".

2.2 MATERIALS, GENERAL

A. Single Source Responsibility: Furnish each type of product from single manufacturer. Provide secondary materials only as recommended by manufacturer of primary materials.

2.3 PERFORMANCE REQUIREMENTS

A. General: Provide modified bituminous sheet waterproofing that prevents the passage of liquid water and complies with the following minimum physical requirements as demonstrated by testing performed by an independent testing agency of manufacturer's current waterproofing membrane formulations.

1. Tensile Strength: 250 psi (1.7 MPa) according to ASTM D 412, Die C, modified.
2. Ultimate Elongation: 300 percent minimum according to ASTM D 412, Die C, modified.
3. Low-Temperature Flexibility: Pass at minus 20 deg F (minus 29 deg C) according to ASTM D 1970.
4. Crack Cycling: Unaffected after 100 cycles of 1/8 in (3 mm) movement according to ASTM C 836.
5. Puncture Resistance: 40 lbf (180 N) minimum according to ASTM E 154.
6. Hydrostatic-Head Resistance: 150 ft (45 m) minimum according to ASTM D 5385.
7. Water Absorption: 0.15 percent weight-gain maximum after 48-hour immersion at 70 deg F (21 deg C) according to ASTM D 570.
8. Vapor Permeance: 0.05 perms (2.9 ng/Pa x s x sq. m) according to ASTM E 96, Water Method.

B. Material Compatibility: Provide waterproofing materials that are compatible with one another under conditions of service and application required, as demonstrated by manufacturer based on testing and field experience.

2.4 MODIFIED BITUMINOUS SHEET WATERPROOFING MATERIALS

A. Modified Bituminous Sheet Waterproofing: 60 mils (1.5 mm) thick, self-adhering sheet consisting of 56 mils (1.4 mm) of rubberized asphalt laminated to a 4 mils (0.10 mm) thick, polyethylene film with release liner on adhesive side.

1. Manufacturers and Products:

   a. American Hydrotech, Inc.; VM60.
   b. Carlisle Coatings & Waterproofing Inc.; CCW MiraDRI 860/861.
   c. CETCO Building Materials Group; Envirosheet.
   d. Grace Construction Products; Bituthene 3000.
   e. Henry Company; Blueskin WP 200.
   f. Meadows, W. R., Inc.; Mel-Rol.
   g. Polyguard Products, Inc.; Polyguard 650.
   h. Sika Corporation; SikaBit S-60.
   i. Tamko Roofing Products, Inc.; TW-60.

2. Manufacturers and Products:

   a. CETCO Building Materials Group; Envirosheet.
   b. Grace Construction Products; Bituthene 3000.
   c. Sika Corporation; SikaBit S-60.

2.5 ACCESSORY MATERIALS

A. General: Furnish accessory materials recommended by waterproofing system manufacturer for intended use and compatible with waterproofing.

B. Primer: Liquid primer suitable for substrate provided by waterproofing manufacturer.

C. Surface Conditioner: Liquid surface conditioner suitable for substrate provided by waterproofing manufacturer.

D. Liquid Membrane: Elastomeric, two-component liquid, cold fluid applied, trowel grade or low viscosity provided by waterproofing manufacturer.

E. Substrate Patching Membrane: Low-viscosity, two-component, asphalt-modified coating provided by waterproofing manufacturer.

F. Sheet Strips: Self-adhering, rubberized-asphalt sheet strips of same material and thickness as sheet waterproofing provided by waterproofing manufacturer.

G. Mastic and Adhesives: Liquid mastic and adhesives provided by waterproofing manufacturer.

H. Termination Bars: ASTM A 666, Type 304 formed stainless steel bars; 2 types, one flat and one flat with upper flange shaped to receive sealant, locations as indicated; 1 in by 1/8 in (25 mm by 3 mm) thick; predrilled at 8 in (200 mm) centers; with stainless steel fasteners. No aluminum or plastic bars allowed.

2.6 BOARD INSULATION

A. Extruded Polystyrene Board Insulation: As specified in Division 07 Section "Thermal

Insulation".

2.7 MOLDED-SHEET DRAINAGE PANELS

A. Molded-Sheet Drainage Panels; Vertical Applications:

1. Description: Pre-fabricated composite with drainage core faced with geotextile filter fabric on dimpled side (facing earth) and protective covering on flat side (facing waterproofing).
2. Protective Covering: Smooth polymeric film.
3. Drainage Core: Three-dimensional, non-biodegradable, molded polypropylene or polystyrene.

    a. Minimum Compressive Strength: 15,000 lbf/sf (718 kPa) according to ASTM D 1621.
    b. Minimum In-Plane Flow Rate: 15 gpm/ft (188 L/min per m) of unit width at hydraulic gradient of 1.0 and compressive stress of 25 psig (172 kPa) according to ASTM D 4716.

4. Geotextile Filter Fabric: Non-woven needle-punched geotextile, manufactured for subsurface drainage, made from polypropylene, polyolefin, or polyester; complying with following properties according to AASHTO M 288:

    a. Survivability: Class 2.
    b. Permittivity: 0.1 per second, minimum.

5. Manufacturers and Products:

    a. American Hydrotech; Hydrodrain 420.
    b. American Wick Drain Corporation; AmeriDrain 520.
    c. Carlisle Coatings & Waterproofings; CCW MiraDRAIN 6200.
    d. Grace Construction Products; Hydroduct 220.
    e. Henry Company; DB 520.
    f. JDR Enterprises, Inc.; J-Drain 420.
    g. Polyguard Products, Inc.; Flow 15P.
    h. Sika Corporation; SikaDrainage Mat 420.
    i. Tremco Commercial Sealants & Waterproofing; TREMDrain 1000.

B. Molded-Sheet Drainage Panels; Horizontal Applications (as indicated below):

1. Location:

    a. Horizontal positive side applications at above grade split slabs.
    b. Horizontal positive side applications at earth covered horizontal decks.

2. Description: Pre-fabricated composite with drainage core faced with geotextile filter fabric on dimpled side (facing earth) and protective covering on flat side (facing waterproofing).
3. Protective Covering: Smooth polymeric film.
4. Drainage Core: Three-dimensional, non-biodegradable, molded polypropylene or polystyrene.

a. Minimum Compressive Strength: 18,000 lbf/sf (862 kPa) according to ASTM D 1621.
b. Minimum In-Plane Flow Rate: 18 gpm/ft (225 L/min per m) of unit width at hydraulic gradient of 1.0 and compressive stress of 25 psig (172 kPa) according to ASTM D 4716.

5. Filter Fabric: Non-woven needle-punched geotextile, manufactured for subsurface drainage, made from polypropylene, polyolefin, or polyester; complying with following properties according to AASHTO M 288:

a. Survivability: Class 2.
b. Permittivity: 0.1 per second, minimum.

6. Available Manufacturers and Products:

a. American Hydrotech, Inc.; Hydrodrain 700.
b. American Wick Drain Corporation; AmeriDrain 654.
c. Carlisle Coatings & Waterproofings; CCW MiraDRAIN 9800.
d. Grace Construction Products; Hydroduct 660.
e. Henry Company; DB 650n with G100s/s base/protection sheet.
f. Polyguard Products, Inc.; Flow 18-H.
g. Sika Corporation; SikaDrainage Mat 700.
h. Tremco Commercial Sealants & Waterproofing; TREMDrain 2000.

A. Adhesive for Bonding Drainage Panels: Product compatible with drainage panels being bonded and with demonstrated capability to bond securely to substrates indicated without damaging substrates.

B. Miscellaneous Accessories: As required by manufacturer for complete installation assembly, including flanges around piping penetrations and expanded base and tie-in fittings as necessary to coordination with foundation drainage system.

C. Foundation Drainage System: As specified in Division 33 Section "Foundation Drainage System".

PART 2 - EXECUTION

2.1 EXAMINATION

A. Acceptance of Surfaces and Conditions: Examine substrates to receive products and systems and associated work for compliance with requirements and other conditions affecting performance. Proceed only when unsatisfactory conditions have been corrected in a manner complying with Contract Documents. Starting work within a particular area will be construed as acceptance of surface conditions.

2.2 INSTALLATION, GENERAL

A. Installation Quality Standards: In addition to standards listed elsewhere, perform Work according to following, unless otherwise specified:

1. ASTM D 6135.
2. Respective manufacturer’s written installation instructions.

3. Accepted submittals.
4. Contract Documents.

2.3 PREPARATION

A. General: Comply with manufacturer's instructions, recommendations and specifications for cleaning and surface preparation. Surfaces shall have no defects, contaminants, or errors which would result in poor or potentially defective installation or would cause latent defects in Work.

B. Excavation Dewatering: Verify that the waterproofing application area is dry and free of standing and uncontrolled water. Should the dewatering system fail at any time during application of waterproofing system, the materials shall be completely removed and work shall start over with new materials once the area is dry and free of water again.

C. Concrete Surfaces:

1. Verify concrete has cured and aged for minimum time period recommended by waterproofing manufacturer.
2. Verify that substrate is visibly dry and within the moisture limits recommended in writing by manufacturer. Test for capillary moisture by plastic sheet method according to ASTM D 4263.
3. Remove fins, ridges, mortar, and other projections.
4. Verify honeycomb voids, rock pockets, form tie holes, and other defects are filled by other Division 03 Sections.
5. Remove dust and dirt from joints and cracks according to ASTM D 4258.
6. Remove debris, oily substances, mud, grease, oil, bitumen, form-release agents, paints, curing compounds, penetrating contaminants or film-forming coatings from concrete, and similar substances.

2.4 MODIFIED BITUMINOUS SHEET WATERPROOFING INSTALLATION

A. General Installation Performance Requirements: Install waterproofing system to prevent passage of liquid water under hydrostatic pressure.

B. Joint and Crack Treatment: Prepare, treat, rout, and fill joints and cracks in substrate.

C. Primer: Apply to substrates at required rate and allow to dry. Limit priming to areas that will be covered by waterproofing in same day. Reprime areas exposed for more than 24 hours.

D. Waterproofing Tie-Ins: Install waterproofing and accessories to tie into adjacent waterproofing to ensure watertight installation.

E. Termination and Penetration Treatment: Prepare vertical and horizontal surfaces at terminations and penetrations through waterproofing and at expansion joints, drains, and sleeves.

F. Waterproofing Application: Apply and firmly adhere sheets over area to receive waterproofing.

1. Accurately align sheets and maintain uniform 2-1/2 in (63 mm) minimum lap widths and end laps. Overlap and seal seams and stagger end laps to ensure watertight installation.

2. Treat inside and outside corners. Install sheet strips centered over vertical inside corners. Install 3/4 in (19 mm) fillets of liquid membrane on horizontal inside corners and as follows:

    a. At footing-to-wall intersections, extend liquid membrane each direction from corner or install sheet strip centered over corner.
    b. At deck-to-wall intersections, extend liquid membrane or sheet strips onto deck waterproofing and to finished height of sheet flashing.

3. Apply sheets firmly without wrinkles, buckles or kinks.
4. Apply sheets so that direction of flow of water is over and not against laps.
5. Apply sheet strips under waterproofing membrane at, but not limited to, following locations:

    a. Expansion joints.
    b. Discontinuous deck-to-wall and deck-to-deck joints.
    c. Under clamping ring at drains.
    d. Wall angles and corners.
    e. Substrate cracks.
    f. Penetrations.
    g. Isolation, construction and contraction joints.
    h. Where waterproofing membrane may be subject to unusual strain.

6. Apply liquid membrane fillet at interior corners under sheet strips.
7. If not indicated otherwise, terminate top edges of sheets under metal counterflashings or with metal termination bars and sealants.
8. Apply mastic or liquid membrane to vertical and horizontal terminations.
9. Seal exposed edges of sheets at terminations not concealed by metal counterflashings or metal termination bars and sealants.

G. Damaged Waterproofing: Repair waterproofing not complying with requirements and patch with sheet waterproofing patch extending 6 in (150 mm) beyond repaired areas in each direction, pressed or rolled in place, with edges sealed with mastic.

1. Patch tears, voids, misaligned or inadequately lapped seams.
2. Slit fishmouths and blisters, overlap flaps, and patch.

2.5 BOARD INSULATION INSTALLATION

A. Extruded Polystyrene Board Insulation: As specified in Division 07 Section "Thermal **Insulation".**

2.6 MOLDED-SHEET DRAINAGE PANEL INSTALLATION

A. Installation: Place and secure molded-sheet drainage panels with adhesive, with geotextile filter fabric facing away from waterproofed surface. Lap edges and ends of geotextile filter fabric to maintain continuity. Protect installed drainage panels during subsequent construction.

2.7 FIELD QUALITY CONTROL

A. Manufacturer's Field Service: Manufacturer's qualified technical representative shall periodically inspect Work to ensure installation is proceeding in accordance with manufacturer's designs, recommendations, instructions, and warranty requirements. Representative shall submit written reports of each visit indicating observations, findings, and conclusions of inspection.

1. Manufacturer's Technical Representative Qualifications: Direct employee of technical services department of manufacturer with experience in providing recommendations, observations, evaluations, and problem diagnostics.

B. Testing Agency: The Owner may employ and pay a qualified independent testing agency to perform field quality control. Materials and installation failing to meet specified requirements shall be replaced at Contractor's expense. Retesting of materials and installations failing to meet specified requirements shall be done at Contractor's expense.

C. Testing: Provide one of the following testing methods:

1. Flood Testing: Flood test each deck area for leaks, according to recommendations in ASTM D 5957, after completing waterproofing and flashing, but before overlaying construction is placed. Install temporary containment assemblies, plug or dam drains, and flood with potable water.

   a. Flood to an average depth of 2-1/2 in (65 mm) with a minimum depth of 1 in (25 mm) and not exceeding a depth of 4 in (100 mm). Maintain minimum of 2 in (50 mm) of clearance from top of base flashing.
   b. Flood each area for 24 hours.
   c. After flood testing, repair leaks, repeat flood tests, and make further repairs until waterproofing and flashing installation is watertight.

2. Electronic Water Testing, Electronic Field Vector Mapping (EFVM): Perform leak testing by an electronic detection process to verify entire waterproofing membrane is free of holes, open seams, and capillary defects that allow water to pass. Administer EFVM by a qualified testing agency as follows:

   a. Leak detection of horizontal waterproofing membrane shall be done prior to placement of protection board and remaining system components.

      1) Place conductor wire on bare membrane. Secure wire with small strips of waterproofing or other compatible membrane or tape.
      2) Thoroughly wet waterproofing membrane with potable water in area of test. Wetting can be accomplished by hand or mechanical spray devises. Membrane shall be wet during testing procedures.
      3) Technician shall mark on waterproofing membrane or surface exact location of defect and assign an identification number to each location.
      4) Visually inspect entire waterproofing membrane area and repair breaches found. An EFVM retest shall be performed to confirm integrity of repair(s).

   b. Technician shall prepare a report of each day's test results containing a written description and photograph of defect(s) located and a schematic CAD drawing indicating location of conductor wire and of defect(s) located in testing field to within 1 in (25 mm) of accuracy. This report shall be made available in hard copy.

c. Report results of tests, both successful and unsuccessful. In addition to results, report shall include date of test, project name, list of products being applied and tested, name of applicator, name of Contractor, and conditions causing failure of waterproofing membrane in event of an unsuccessful test.
d. Materials and installations failing to meet specified requirements shall be replaced at Contractor's expense. Retesting of materials and installations failing to meet specified requirements shall be done at Contractor's expense.

D. Correction of Deficiencies: Correct deficiencies in or remove waterproofing that does not comply with requirements, repair substrates, reapply waterproofing, and repair flashing.

1. After tests, repair leaks and make further repairs until waterproofing installation is watertight.

E. Final Inspection: Arrange for waterproofing system manufacturer's qualified technical representative to inspect waterproofing installation on completion of waterproofing membrane and flashing. Notify Architect and Owner 48 hours in advance of date and time of final inspection.

2.8 CLEANING AND PROTECTION

A. Protect waterproofing from damage and wear during remainder of construction period.

B. Clean spillage and soiling from adjacent construction using cleaning agents and procedures recommended by manufacturer of affected construction.

END OF SECTION

SECTION 071616

CRYSTALLINE WATERPROOFING

PART 1 - GENERAL

1.1 SUMMARY

A. Section Includes: Crystalline waterproofing system and supplementary items necessary for its installation in locations as follows:

1. Negative side applications at the elevator pit walls and slab.

1.2 ACTION SUBMITTALS

A. Product Data: Manufacturer's technical literature for each product and system indicated.

1. Include manufacturer's specifications for materials and installation instructions.
2. Include manufacturer's written instructions for evaluating, preparing, and treating substrate.
3. Include manufacturer's standard drawing details for each condition encountered in Work, including, but not limited to, substrate joint and crack treatments, waterproofing applications, sheet flashings, penetrations, inside and outside corners, tie-ins with adjoining waterproofing, and other termination conditions.

1.3 INFORMATIONAL SUBMITTALS

A. Product Test Reports: Written reports based on evaluation of comprehensive tests performed by qualified testing agency indicating that each product complies with requirements.

B. Field Quality Control Reports: Written report of testing and inspection required by "Field Quality Control".

C. Manufacturer's Project Acceptance Document: Certification by the manufacturer that its product(s) are approved, acceptable, suitable for use in specific locations, for specific details, and for applications indicated, specified, or required, and that a warranty will be issued.

D. Qualification Data:

1. For firms and persons specified in "Quality Assurance" to demonstrate their capabilities and experience. Include list of completed projects.

E. Warranty: Sample of warranty.

1. Provide manufacturer's written warranty covering materials and installation (labor) stating obligations, remedies, limitations and exclusions.

1.4 QUALITY ASSURANCE

A. Manufacturer Qualifications: Manufacturer with not less than 10 years of experience in the successful production and in-service performance of products and systems similar to scope of this Project.

B. Installer Qualifications:

1. Experience: Installer's personnel with not less than 5 years of experience in the successful performance of Work similar to scope of this Project.
2. Supervision: Installer shall maintain a competent supervisor at Project while the Work is in progress, and who has not less than 5 years of experience installing products and systems similar to scope of this Project.
3. Manufacturer Acceptance: Installer shall be certified, approved, licensed, or acceptable to manufacturer to install products.

1.5 PRE-INSTALLATION CONFERENCE

A. Pre-Installation Conference: Before Work begins, conduct conference at Project site.

1. Participants:

a. Architect.
b. Contractor, including superintendent.
c. Installer, including project manager and supervisor.
d. If requested, Manufacturer's qualified technical representative.
e. Installers of other construction interfaced with Work.

2. Minimum Agenda: Installer shall demonstrate understanding of the Work required by describing detailed procedures for preparing, installing, and cleaning the Work. Demonstration shall include, but not be limited to, following topics:

a. Tour representative areas of Work, inspect and discuss condition of substrate, and other preparatory work performed by other trades.
b. Review Contract Document requirements.
c. Review approved submittals.
d. Review inspection and testing requirements.
e. Review environmental conditions and procedures for coping with unfavorable conditions.
f. Resolve deviations or differences between Contract Documents and the manufacturer's specifications.

3. Record discussions, including decisions and agreements, and prepare report.

1.6 DELIVERY, STORAGE, AND HANDLING

A. Deliver liquid materials to Project site in original packages with seals unbroken, labeled with manufacturer's name, product brand name and type, date of manufacture, and directions for storing and mixing with other components.

B. Store liquid materials in their original undamaged packages in a clean, dry, protected location and within temperature range required by waterproofing manufacturer.

C. Remove and replace liquid materials that cannot be applied within their stated shelf life.

D. Protect stored materials from direct sunlight.

1.7 PROJECT CONDITIONS

A. Environmental Limitations: Apply waterproofing within the range of ambient and substrate temperatures recommended by manufacturer. Do not apply waterproofing to a damp or wet substrate or during high humidity conditions including snow, rain, fog, or mist.

1.8 COORDINATION

A. Coordinate installation of products and systems with interfacing and adjoining construction to provide a successful installation without failure.

1.9 WARRANTY

A. Manufacturer's Warranty: Furnish manufacturer's written material and labor warranty signed by an authorized representative using manufacturer's standard form agreeing to furnish materials and labor required to repair or replace work which exhibits material defects caused by manufacture or design and installation of product. "Defects" is defined to include but not limited to deterioration or failure to perform as required.

1. Warranty Period: Manufacturer shall warrant the products to be free from material and labor Defects for a period of 10 years from date of Substantial Completion.

B. Installer's Warranty: Furnish installer's written workmanship warranty signed by an authorized representative using installer's standard form agreeing to provide labor required to repair or replace work which exhibits workmanship defects. "Defects" is defined to include but not limited to deterioration or failure to perform as required.

1. Warranty Period: Installer shall warrant the installation to be free from workmanship Defects for a period of 2 years from date of Substantial Completion.

PART 2 - PRODUCTS

2.1 MANUFACTURERS AND PRODUCTS

A. Acceptable Manufacturers and Products: Subject to compliance with requirements of Contract Documents as judged by the Architect, provide product by one of manufacturers listed. If not listed, submit as substitution according to the Conditions of the Contract and Division 01 Section "Substitution Procedures".

B. Available Manufacturers and Products: Subject to compliance with requirements of Contract Documents as judged by the Architect, manufacturers offering products that may be incorporated into the Work include, but are not limited to, those listed.

2.2 MATERIALS, GENERAL

A. Single Source Responsibility: Furnish each type of product from single manufacturer. Provide secondary materials only as recommended by manufacturer of primary materials.

2.3 CRYSTALLINE WATERPROOFING MATERIALS

A. Crystalline Waterproofing: Pre-packaged, gray colored proprietary blend of portland cement, specially treated sand, and active chemicals that, when mixed with water and applied, penetrates into cementitious substrates and reacts chemically with byproducts of cement hydration in presence of water to develop crystalline growth within substrate capillaries to produce an impervious, dense, waterproof substrate.

1. Minimum Physical Properties:

    a. Water Permeability: Maximum zero for water at 30 ft (9 m) according to CE CRD-C 48.
    b. Compressive Strength: Minimum 3000 psi (20 MPa) at 28 days according to ASTM C 109 / C 109M.
    c. Flexural Strength: Minimum 700 psi (1.5 MPa) at 28 days according to ASTM C 348 / C 348M.

2. Potable Water Compatibility: Complies with NSF/ANSI 61 "Drinking Water System Component - Health Effects."
3. Manufacturers and Products:

    a. AQUAFIN, Inc.; AQUAFIN-IC.
    b. BASF Building Systems; MasterSeal 500 (Formerly Tegraproof).
    c. Euclid Tamms; HEY'DI K-11.
    d. Kryton Group of Companies; Krystol T1 & T2 Waterproofing System.
    e. Tremco; Permaquik Crystalline Waterproofing.
    f. Vandex USA LLC; Vandex Super/Super White.
    g. Xypex Chemical Corp.; Xypex Concentrate / Xypex Modified.

2.4 ACCESSORY MATERIALS

A. General: Furnish accessory materials recommended by waterproofing system manufacturer for intended use and compatible with waterproofing.

B. Patching Compound: Factory-premixed cementitious repair mortar, crack filler, or sealant recommended by waterproofing manufacturer for filling and patching tie holes, honeycombs, reveals, and other imperfections; compatible with substrate and other materials indicated; provided by waterproofing manufacturer.

1. Minimum Physical Properties:

    a. Compressive Strength: 4000 psi (27 MPa) at 28 days according to ASTM C 109.
    b. Flexural Strength: 800 psi (5.7 MPa) at 28 days according to ASTM C 348.
    c. Shrinkage: Minus 0.093 percent at 28 days and plus 0.073 percent at 90 days according to ASTM C 596.

C. Plugging Compound: Factory-premixed cementitious compound with hydrophobic properties and recommended by waterproofing manufacturer; resistant to water and moisture but vapor permeable for all standard applications (vertical, overhead, and horizontal surfaces not exposed to vehicular traffic); compatible with substrate and other materials indicated; provided by waterproofing manufacturer.

1. Minimum Physical Properties:

a. Compressive Strength: 2800 psi (19.3 MPa) at 28 days according to ASTM C 109.
b. Flexural Strength: 320 psi (2.2 MPa) at 28 days according to ASTM C 348.

D. Protective Topping at Horizontal Surfaces: Provide one of the following:

1. Portland Cement Topping: ASTM C 150, Type I, sand per ASTM C 144, potable water and admixtures provided by waterproofing manufacturer.
2. Manufacturer's Topping / Hardener: Manufacturer's recommended protective topping or hardener product.

2.5 MIXES

A. Crystalline Waterproofing: Add prepackaged dry ingredients to water according to manufacturer's written instructions. Mix together with mechanical mixer or by hand to required consistency.

B. Protective Topping at Horizontal Surfaces:

1. Portland Cement Topping: Measure, batch, and mix Portland cement and sand in proportion of 1:3 and water. Blend together with mechanical mixer to required consistency.
2. Manufacturer's Topping / Hardener: Mix according to manufacturer's written instructions.

PART 3 - EXECUTION

3.1 EXAMINATION

A. Acceptance of Surfaces and Conditions: Examine substrates to receive products and systems and associated work for compliance with requirements and other conditions affecting performance. Proceed only when unsatisfactory conditions have been corrected in a manner complying with Contract Documents. Starting work within a particular area will be construed as acceptance of surface conditions.

3.2 INSTALLATION, GENERAL

A. Installation Quality Standards: In addition to standards listed elsewhere, perform Work according to following, unless otherwise specified:

1. Respective manufacturer's written installation instructions.
2. Accepted submittals.
3. Contract Documents.

3.3 PREPARATION

A. General: Comply with manufacturer's instructions, recommendations and specifications for cleaning and surface preparation. Surfaces shall have no defects, contaminants, or errors which would result in poor or potentially defective installation or would cause latent defects in Work.

B. Active Water Leaks: Stop with plugging compound according to waterproofing manufacturer's written instructions.

C. Substrate Repair: Repair damaged or unsatisfactory substrate with patching compound according to manufacturer's written instructions.

1. At holes and cracks in substrate, remove loosened chips and cut reveal with sides perpendicular to surface, not tapered, and approximately 1 in (25 mm) deep. Fill reveal with patching compound flush with surface.

D. Surface Preparation: Comply with waterproofing manufacturer's written instructions to remove efflorescence, chalk, dust, dirt, mortar spatter, grease, oils, paint, curing compounds, and form-release agents to ensure that waterproofing bonds to surfaces.

1. Concrete: Clean concrete surfaces according to ASTM D 4258.

a. Verify concrete has cured and aged for minimum time period recommended by waterproofing manufacturer.
b. Verify concrete is visibly dry and free of moisture.
c. Remove fins, ridges, mortar, and other projections.
d. Verify honeycomb voids, rock pockets, form tie holes, and other defects are filled by other Division 03 Sections.
e. Remove debris, standing water, oily substances, mud, grease, oil, bitumen, form-release agents, paints, curing compounds, penetrating contaminants or film-forming coatings from concrete, and similar substances.
f. Etch scratch and float finished concrete with 10 percent muriatic (hydrochloric) acid solution according to ASTM D 4260.
g. Prepare smooth formed and trowel finished concrete by mechanical abrading according to ASTM D 4259.

2. Concrete Unit Masonry: Clean concrete unit masonry surfaces according to ASTM D 4261.

a. Lightweight Concrete Unit Masonry: Etch with 10 percent muriatic (hydrochloric) acid solution or abrade surface by wire brushing. Remove acid residue until pH readings of water after rinse are not more than 1.0 pH lower or 2.0 pH higher than pH of water before rinse.
b. Medium- and Normal-Weight Concrete Unit Masonry: Sandblast or bushhammer to a depth of 1/16 in (1.5 mm).

3. Concrete Joints: Clean reveals according to waterproofing manufacturer's written instructions.

3.4 CRYSTALLINE WATERPROOFING INSTALLATION

A. Application:

1. Saturate surface with water for several hours prior to application and maintain damp condition until applying waterproofing. Remove standing water.
2. Do not allow waterproofing, patching, and plugging materials to enter reveals or annular spaces intended for resilient sealants or gaskets, such as joint spaces between pipes and pipe sleeves.
3. Number of Coats: As directed by manufacturer's installation instructions.
4. Application Method: Brush or spray. Apply to ensure that each coat fills voids and is in full contact with substrate or previous coat. Dampen surface between coats.
5. Final Coat Finish: Brushed or spray textured.
6. Curing: Moist cure waterproofing as required by manufacturer immediately after final coat has set, followed by not less than 2 days air drying, unless otherwise recommended in writing by manufacturer.

B. Waterproofing Treatment Extensions: Extend waterproofing treatment as follows:

1. Elevator Pits: Onto every substrate in areas indicated for treatment, including pipe trenches, pipe chases, pits, sumps, and similar offsets and features.
2. Back Side of Exterior Single-Wythe CMU Walls: Onto columns integral with treated walls, including non-treated walls intersecting treated walls, for a distance of 24 in (600 mm) for cast-in-place concrete and 48 in (1200 mm) for masonry.
3. Pools or Cisterns: Onto every substrate on "wet" side of pool or cistern.

3.5 FIELD QUALITY CONTROL

A. Manufacturer's Field Service: Manufacturer's qualified technical representative shall periodically inspect Work to ensure installation is proceeding in accordance with manufacturer's designs, recommendations, instructions, and warranty requirements. Representative shall submit written reports of each visit indicating observations, findings, and conclusions of inspection.

1. Manufacturer's Technical Representative Qualifications: Direct employee of technical services department of manufacturer with experience in providing recommendations, **observations, evaluations, and problem diagnostics.**

3.6 PROTECTION

A. Requirements: Protect applied waterproofing from rapid drying, severe weather exposure, and water accumulation. Maintain completed Work in moist condition for not less than 3 days by procedures recommended in writing by waterproofing manufacturer. Protect waterproofing from temperatures below 36 deg F. (11 deg C).

B. Protective Topping at Horizontal Surfaces:

1. Portland Cement Topping: Apply minimum 1 in (25 mm) thick portland cement protective topping over floor surfaces.
2. Manufacturer's Topping / Hardener: Apply according to manufacturer's written instructions.

END OF SECTION

SECTION 07 1800

TRAFFIC COATINGS

PART 1 - GENERAL

1.1 SUMMARY

A. Section Includes: Traffic coatings and supplementary items necessary for application.

1.2 ACTION SUBMITTALS

A. Product Data: Manufacturer's technical literature for each product and system indicated.

1. Include manufacturer's specifications for materials, finishes, construction details, application instructions, and recommendations for maintenance.

B. Shop Drawings: Show extent of each traffic coating. Include details for treating substrate joints and cracks, flashings, deck penetrations, and other termination conditions.

C. Samples for Initial Selection: For each type of exposed finish.

D. Samples for Verification Purposes: For each type of traffic coating required, prepared on rigid backing and of same thickness and material indicated for the Work.

1. Provide stepped samples on backing large enough to illustrate build-up of traffic coatings.

1.3 INFORMATIONAL SUBMITTALS

A. Product Test Reports: Written reports based on evaluation of comprehensive tests performed by qualified testing agency indicating that each product complies with requirements.

B. Field Quality Control Reports: Written report of testing and inspection required by "Field Quality Control".

C. Manufacturer's Project Acceptance Document: Certification by the manufacturer that its products and systems are approved, acceptable, suitable for use in specific locations, for specific details, and for applications indicated, specified, or required, and that a warranty will be issued.

D. Qualification Data:

1. For firms and persons specified in "Quality Assurance" to demonstrate their capabilities and experience. Include list of completed projects.

E. Warranty: Sample of warranty.

1. Provide manufacturer's written warranty covering materials and application (labor) stating obligations, remedies, limitations and exclusions.

1.4 CLOSEOUT SUBMITTALS

A. Maintenance Data: To include in maintenance manuals. Include recommendations for periodic inspections, cleaning, care, maintenance, and repair of traffic coatings.

1.5 QUALITY ASSURANCE

A. Manufacturer Qualifications: Manufacturer with not less than 10 years of experience in the successful production and in-service performance of products and systems similar to scope of this Project.

B. Applicator Qualifications:

1. Experience: Installer's personnel with not less than 5 years of experience in the successful performance of Work similar to scope of this Project.
2. Supervision: Installer shall maintain a competent supervisor at Project while the Work is in progress, and who has not less than 5 years of experience installing products and systems similar to scope of this Project.
3. Manufacturer Acceptance: Installer shall be certified, approved, licensed, or acceptable to manufacturer to install products.

C. Fire-Test-Response Characteristics: Provide traffic coating materials with the fire-test-response characteristics as determined by testing identical products per test method below for deck type and slopes indicated by an independent testing and inspecting agency that is acceptable to authorities having jurisdiction.

1. Roof Coverings: Provide materials identical to those of traffic coatings tested according to ASTM E 108/UL 790 for deck type and slopes indicated and that comply with requirements for roof-covering Class A.
2. Mechanical/Equipment-rooms that Also Serve as a Return Air Plenum: Provide materials identical to those of traffic coatings tested according to ASTM E 84, where used in areas serving as a return air plenum that comply with requirements indicated.

    a. Flame spread less than 25.
    b. Smoke Density less than 50.

D. Mock-ups: Prior to fabrication and installation, build mock-up for each form of construction and finish required to verify selections made under sample Submittals and to demonstrate aesthetic effects and qualities of materials and execution. Build mock-up using materials indicated for the completed Work.

1. Build mock-up in the location and of the size indicated or, if not indicated, as directed by Architect. Contractor shall provide structural support framework.

    a. Show typical components, attachments to building structure, and requirements of installation.

2. Notify Architect seven days in advance of the dates and times when mock-up will be installed.
3. Obtain Architect's acceptance of mock-ups before starting fabrication or installation.

4. Acceptance of mock-ups does not constitute acceptance of deviations from the Contract Documents contained in mock-ups unless such deviations are specifically noted by Contractor and accepted by Architect in writing.
5. Demolish and remove mock-ups when directed by Architect unless accepted to become part of the completed Work.

1.6 PRE-APPLICATION CONFERENCE

A. Pre-Application Conference: Before Work begins, conduct conference at Project site.

1. Participants:

   a. Architect.
   b. Contractor, including superintendent.
   c. Installer, including project manager and supervisor.
   d. If requested, Manufacturer's qualified technical representative.
   e. Installers of other construction interfaced with Work.

2. Minimum Agenda: Installer shall demonstrate understanding of the Work required by describing detailed procedures for preparing, installing, and cleaning the Work. Demonstration shall include, but not be limited to, following topics:

   a. Tour representative areas of Work, inspect and discuss condition of substrate, and other preparatory work performed by other trades.
   b. Review Contract Document requirements.
   c. Review approved submittals.
   d. Review inspection and testing requirements.
   e. Review environmental conditions and procedures for coping with unfavorable conditions.
   f. Resolve deviations or differences between Contract Documents and the manufacturer's specifications.

3. Record discussions, including decisions and agreements, and prepare report.

1.7 DELIVERY, STORAGE, AND HANDLING

A. Deliver materials in original packages and containers with seals unbroken and bearing manufacturer's labels showing the following information:

1. Manufacturer's brand name.
2. Type of material.
3. Directions for storage.
4. Date of manufacture and shelf life.
5. Lot or batch number.
6. Mixing and application instructions.
7. Color.

B. Store materials in a clean, dry location protected from exposure to direct sunlight. In storage areas, maintain environmental conditions within range recommended in writing by manufacturer.

1.8 PROJECT CONDITIONS

A. Environmental Limitations: Apply traffic coatings within the range of ambient and substrate temperatures recommended in writing by manufacturer. Do not apply traffic coatings to damp or wet substrates, when temperatures are below 40 deg F (5 deg C), when relative humidity exceeds 85 percent, or when temperatures are less than 5 deg F (3 deg C) above dew point.

1. Do not apply traffic coatings in snow, rain, fog, or mist, or when such weather conditions are imminent during the application and curing period. Apply only when frost-free conditions occur throughout the depth of the substrate.

B. Do not apply traffic coating until items that will penetrate membrane have been installed.

1.9 COORDINATION

A. Coordinate application of products and systems with interfacing and adjoining construction to provide a successful application without failure.

1.10 WARRANTY

A. Manufacturer's Warranty: Furnish manufacturer's written material and labor warranty signed by an authorized representative using manufacturer's standard form agreeing to furnish materials and labor required to repair or replace work which exhibits material defects caused by manufacture or design and application of product. "Defects" is defined to include but not limited to deterioration or failure to perform as required.

1. Defects of traffic coatings includes, but is not limited to, the following:

    a. Adhesive or cohesive failures.
    b. Abrasion or tearing failures.
    c. Surface crazing or spalling.
    d. Intrusion of water, oils, gasoline, grease, salt, deicer chemicals, or acids into deck substrate.

2. Warranty does not include deterioration or failure of traffic coating due to unusual weather phenomena, failure of prepared and treated substrate, formation of new substrate cracks exceeding 1/16 in (1.5 mm) din width, fire, vandalism, or abuse by maintenance equipment.
3. Warranty Period: Manufacturer shall warrant the products to be free from material and labor Defects for a period of 5 years from date of Substantial Completion

PART 2 - PRODUCTS

2.1 MANUFACTURERS AND PRODUCTS

A. Acceptable Manufacturers and Products: Subject to compliance with requirements of Contract Documents as judged by the Architect, provide product by manufacturer listed. If not listed, submit as substitution according to the Conditions of the Contract and Division 01 Section "Substitution Procedures".

1. BASF Construction Chemicals, LLC – Building Systems.

2. Gaco Western LLC.
3. Neogard; Division of Jones-Blair.
4. Pacific Polymers International, Inc.
5. Pecora Corporation
6. Tremco Incorporated; an RPM company.

2.2 MATERIALS, GENERAL

A. Single Source Responsibility: Furnish each type of product from single manufacturer. Provide secondary materials only as recommended by manufacturer of primary materials.

2.3 TRAFFIC COATINGS

A. Physical Requirements: Provide traffic coatings complying with ASTM C 957.

B. Material Compatibility: Provide primers; base, intermediate, and top coats; and miscellaneous materials that are compatible with one another and with substrate under conditions of service and application, as demonstrated by the manufacturer based on testing and field experience.

C. Primer: Manufacturer's standard factory-formulated primer recommended for substrate and conditions indicated.

D. Preparatory and Base Coats: Single- or multi-component aromatic liquid urethane elastomer.

E. Top Coat: Single- or multi-component aliphatic liquid urethane elastomer or aromatic liquid urethane elastomer with UV inhibitors.

1. Color: As scheduled or as indicated in Design Selections.

F. Component Coat Thicknesses: As recommended by traffic coating manufacturer for substrate and service conditions indicated.

G. Aggregate: Uniformly graded washed silica sand of particle sizes, shape, and minimum hardness recommended in writing by traffic coating manufacturer.

2.4 MISCELLANEOUS MATERIALS

A. Joint Sealants: As specified in Division 07 Section "Joint Sealants".

B. Sheet Flashing: 60 mil (1.5 mm) minimum uncured sheet neoprene or non-staining sheet material recommended by traffic coating manufacturer.

C. Adhesive: Contact adhesive recommended in writing by traffic coating manufacturer.

D. Reinforcing Strip: Fiberglass mesh recommended in writing by traffic coating manufacturer.

PART 3 - EXECUTION

3.1 EXAMINATION

A. Acceptance of Surfaces and Conditions: Examine substrates to receive products and systems and associated work for compliance with requirements and other conditions affecting performance. Proceed only when unsatisfactory conditions have been corrected in a manner complying with Contract Documents. Starting work within a particular area will be construed as acceptance of surface conditions.

1. Verify compatibility with and suitability of substrates.
2. Begin coating application only after minimum concrete curing and drying period recommended by traffic coating manufacturer has passed.
3. Verify that substrate is visibly dry and within the moisture limits recommended in writing by manufacturer. Test for capillary moisture by plastic sheet method according to ASTM D 4263 or as recommended by traffic coating manufacturer.

3.2 APPLICATION, GENERAL

A. Application Quality Standards: In addition to standards listed elsewhere, perform Work according to following, unless otherwise specified:

1. Respective manufacturer's written application instructions.
2. Accepted submittals.
3. Contract Documents.

3.3 PREPARATION

A. General: Comply with manufacturer's instructions, recommendations, and specifications for cleaning and surface preparation. Surfaces shall have no defects, contaminants, or errors which would result in poor or potentially defective application or would cause latent defects in Work.

B. Mask adjoining surfaces not receiving traffic coatings, deck drains, and other deck substrate penetrations to prevent spillage, leaking, and migration of coatings.

C. Concrete Substrates: Mechanically abrade concrete surfaces to a uniform profile according to ASTM D 4259 using self-contained recirculating blast cleaning apparatus and manufacturer's recommendations. Do not acid etch.

1. Remove grease, oil, paints, and other penetrating contaminants from concrete.
2. Remove concrete fins, ridges, and other projections.
3. Remove laitance, glaze, efflorescence, curing compounds, concrete hardeners, form-release agents, and other incompatible materials that might affect coating adhesion.
4. Remove remaining loose material to provide a sound surface, and clean surfaces according to ASTM D 4258.

3.4 TERMINATIONS AND PENETRATIONS

A. Prepare vertical and horizontal surfaces at terminations and penetrations through traffic coatings and at expansion joints, drains, and sleeves according to ASTM C 1127 and manufacturer's written recommendations.

B. Provide sealant cants at penetrations and at reinforced and nonreinforced deck-to-wall butt joints.

C. Terminate edges of deck-to-deck expansion joints with preparatory base-coat strip.

D. Install sheet flashings at deck-to-wall expansion and dynamic joints, and bond to deck and wall substrates according to manufacturer's written recommendations.

3.5 JOINT AND CRACK TREATMENT

A. Prepare, treat, rout, and fill joints and cracks in substrates according to ASTM C 1127 and traffic coating manufacturer's written recommendations. Before coating surfaces, remove dust and dirt from joints and cracks according to ASTM D 4258.

1. Comply with recommendations in ASTM C 1193 for joint-sealant installation.

3.6 TRAFFIC COATING APPLICATION

A. Apply traffic coating material according to ASTM C 1127 and manufacturer's written recommendations.

1. Start traffic coating application in presence of manufacturer's technical representative.
2. Mix materials according to manufacturer's instructions.
3. Apply primer over prepared substrate at manufacturer's recommended spreading rate.
4. Apply coatings by spray, roller, notched squeegee, or other applicators according to manufacturer's recommendations.
5. Apply total dry film thickness of traffic coating as indicated, but to not less than the minimum thickness recommended by the manufacturer. Apply each coating to the thickness recommended by the manufacturer.
6. Apply aggregate into wet coating according to manufacturer's recommendations.
7. Verify wet film thickness of each component coat every 100 sf (9 sm).
8. Apply traffic coatings to prepared wall terminations and vertical surfaces to height indicated and omit aggregate on vertical surfaces.

B. Pedestrian Traffic Coating: Apply primer, base, intermediate, and top coats and aggregate according to traffic coating manufacturer's recommendations and as follows:

1. Normal Duty: Apply a minimum total dry film thickness of 30 mils (0.75 mm), excluding substrate primer and aggregate.

a. Aggregate: Apply aggregate at a minimum rate of 8 to 10 lb/100 sf (3.6 to 4.5 kg/10 sm) and backroll to imbed.
b. Location: Interior mechanical equipment rooms.

3.7 FIELD QUALITY CONTROL

A. Manufacturer's Field Service: Manufacturer's qualified technical representative shall periodically inspect Work to ensure installation is proceeding in accordance with manufacturer's designs, recommendations, instructions, and warranty requirements. Representative shall submit written reports of each visit indicating observations, findings, and conclusions of inspection.

1. Manufacturer's Technical Representative Qualifications: Direct employee of technical services department of manufacturer with experience in providing recommendations, observations, evaluations, and problem diagnostics.

B. Verify applied thickness before material attains final set, by use of mil-thickness gage as work progresses. Immediately apply additional coating to produce required thickness where readings indicate thickness less than that specified.

C. Visually inspect all areas for voids, damage, or rupture. Repair as required.

3.8 CURING AND PROTECTING

A. Cure traffic coatings according to manufacturer's written recommendations. Prevent contamination and damage during application and curing stages.

B. Protect traffic coatings from damage and wear during remainder of construction period.

3.9 TRAFFIC COATINGS SCHEDULE

A. Pedestrian Traffic Coating: Provide at the following locations:

1. Mechanical equipment rooms above occupied spaces.
2. Top level of parking structure walking surfaces.
3. All levels of parking structure walking surfaces.
4. Other locations indicated on drawings.

B. Vehicular Traffic Coating: Provide at the following locations:

1. Top level of parking structure driving surfaces.
2. All levels of parking structure driving surfaces.
3. Other locations indicated on drawings.

3.10 COLOR SCHEDULE

A. Color: As selected by Architect from manufacturer's standard colors.

END OF SECTION

SECTION 07 1900

WATER REPELLENTS

PART 1 - GENERAL

1.1 SUMMARY

A. Section includes penetrating water repellent and supplementary items necessary to complete work required for its installation.

1.2 ACTION SUBMITTALS

A. Product Data: Manufacturer's technical literature for each product and system indicated.

1. Include manufacturer's specifications for materials, finishes, construction details, installation instructions, and recommendations for maintenance.

1.3 INFORMATIONAL SUBMITTALS

A. Manufacturer's Project Acceptance Document: Certification by the manufacturer that its product(s) are approved, acceptable, suitable for use in specific locations, for specific details, and for applications indicated, specified, or required, and that a warranty will be issued.

B. Product Test Reports: Written reports based on evaluation of comprehensive tests performed by qualified testing agency indicating that each product complies with requirements.

C. Field Quality Control Reports: Written report of testing and inspection required by "Field Quality Control".

D. Qualification Data:

1. For firms and persons specified in "Quality Assurance" to demonstrate their capabilities and experience. Include list of completed projects.

E. Certification by water repellent manufacturer that products supplied complies with local regulations controlling use of VOCs.

F. Warranty: Sample of warranty.

1. Provide manufacturer's written warranty covering materials and installation (labor) stating obligations, remedies, limitations and exclusions.

1.4 QUALITY ASSURANCE

A. Manufacturer Qualifications: Manufacturer with not less than 5 years of experience in the successful production and in-service performance of products and systems similar to scope of this Project.

B. Installer Qualifications:

1. Experience: Installer's personnel with not less than 5 years of experience in the successful performance of Work similar to scope of this Project.
2. Supervision: Installer shall maintain a competent supervisor at Project while the Work is in progress, and who has not less than 5 years of experience installing products and systems similar to scope of this Project.
3. Manufacturer Acceptance: Installer shall be certified, approved, licensed, or acceptable to manufacturer to install products.

C. Testing Agency Qualifications: An independent testing agency with experience and capability to conduct testing indicated in "Performance Requirements" Article without delaying the Work, per ASTM E 548.

D. Regulatory Requirements: Comply with applicable rules of pollution-control regulatory agency having jurisdiction in Project locale regarding VOCs and use of hydrocarbon solvents.

E. Field Samples: Select one representative surface for each substrate to receive water repellents. Apply water repellent to each substrate, with either partial or full coverage as directed. Comply with application requirements of this Section.

1. Obtain approval of field samples before applying water repellents.
2. Maintain field samples during construction in an undisturbed condition as a standard for judging the completed Work.

1.5 PRE-INSTALLATION CONFERENCE

A. Pre-Installation Conference: Before Work begins, conduct conference at Project site.

1.6 PROJECT CONDITIONS

A. Weather and Substrate Conditions: Do not proceed with application of water repellent under any of the following conditions, except with written instruction of manufacturer:

1. Ambient temperature is less than 40 deg F (4.4 deg C).
2. Concrete surfaces have cured for less than 28 days.
3. Rain or temperatures below 40 deg F (4.4 deg C) are predicted within 24 hours.
4. Application is earlier than 24 hours after surfaces have been wet.
5. Substrate is frozen or surface temperature is less than 40 deg F (4.4 deg C).
6. Windy condition exists that may cause water repellent to be blown onto vegetation or surfaces not intended to be coated.

1.7 COORDINATION

A. Coordinate installation of products and systems with interfacing and adjoining construction to provide a successful installation without failure.

1.8 WARRANTY

A. Manufacturer's Warranty: Furnish manufacturer's written material and labor warranty signed by an authorized representative using manufacturer's standard form agreeing to furnish materials and labor required to repair or replace work which exhibits material defects caused by manufacture or design of product. "Defects" are defined to include but not limited to deterioration or failure to perform as required.

1. Warranty does not include deterioration or failure of coating due to unusual weather phenomena, failure of prepared and treated substrate, formation of new joints and cracks in excess of 1/16 in (1.5 mm) wide, fire, vandalism, or abuse by maintenance equipment.
2. Warranty Period: Manufacturer shall warrant the products to be free from material and labor Defects for a period of 5 years from date of Substantial Completion

PART 2 - PRODUCTS

2.1 MANUFACTURERS

A. Acceptable Manufacturers: Subject to compliance with requirements of Contract Documents as judged by the Architect, provide product by one of manufacturers listed. If not listed, submit as substitution according to the Conditions of the Contract and Division 01 Section "Substitution Procedures".

1. Advanced Chemical Technologies, Inc.
2. Anti Hydro International, Inc
3. L&M Construction Chemicals, Inc.
4. Nox-Crete Products Group
5. PROSOCO, Inc.
6. Textured Coatings of America, Inc.

2.2 PERFORMANCE REQUIREMENTS

A. Provide water repellents with the following properties based on testing manufacturer's standard products, according to test methods indicated, applied to substrates simulating Project conditions using same materials and application methods to be used for Project.

1. Absorption: Minimum 90 percent reduction of absorption after 24 hours in comparison of treated and untreated specimens, per ASTM C642.
2. Water-Vapor Transmission: Maximum 10 percent reduction in rate of vapor transmission in comparison of treated and untreated specimens, per ASTM E 96.
3. Water Penetration and Leakage through Masonry: Maximum 90 percent reduction in leakage rate in comparison of treated and untreated specimens, per ASTM E 514.
4. Durability: Maximum 5 percent loss of water repellency after 2500 hours of weathering in comparison to specimens before weathering, per ASTM G 53.
5. Permeability: Minimum 80 percent breathable in comparison of treated and untreated specimens, per ASTM D 1653.
6. Chloride-Ion Intrusion in Horizontal Concrete: Transportation Research Board, National Research Council's NCHRP Report 244, Series II tests.

    a. Reduction of Water Absorption: 80 percent.
    b. Reduction in Chloride Content: 80 percent.

2.3 WATER REPELLENTS

A. Vertical Applications: Silane, 20 Percent Solids: Penetrating water repellent for vertical application. A monomeric compound containing approximately 20 percent alkyltrialkoxysilanes and meeting VOC/AIM regulations containing 3.3 lb./gal. VOCs or less.

B. Horizontal Applications: Silane, 40 Percent Solids: Penetrating water repellent for horizontal application. A monomeric compound containing approximately 40 percent alkyltrialkoxysilanes and meeting VOC/AIM regulations containing 3.3 lb./gal. VOCs or less.

PART 3 - EXECUTION

3.1 EXAMINATION

A. Examine substrates surfaces to receive water repellents and associated work and conditions under which work will be installed. Do not proceed with installation until unsatisfactory conditions have been corrected in a manner acceptable to Installer. Starting work within a particular area will be construed as applicator's acceptance of surface conditions.

3.2 INSTALLATION, GENERAL

A. Installation Quality Standards: In addition to standards listed elsewhere, perform Work according to following, unless otherwise specified:

1. Respective manufacturer written installation instructions.
2. Accepted submittals.
3. Contract Documents.

3.3 PREPARATION

A. General: Comply with manufacturer's instructions, recommendations, and specifications for cleaning and surface preparation. Surfaces shall have no defects, contaminants, or errors which would result in poor or potentially defective installation or would cause latent defects in Work

B. Test for pH level, according to water repellent manufacturer's written instructions, to ensure chemical bond to silicate minerals.

C. Protect adjoining work, including sealant bond surfaces, from spillage or blow-over of water repellent. Cover adjoining and nearby surfaces of aluminum and glass if there is the possibility of water repellent being deposited on surfaces. Cover live plants and grass.

D. Coordination with Sealants: Do not apply water repellent until sealants for joints adjacent to surfaces receiving water-repellent treatment have been installed and cured.

1. Water-repellent work may precede sealant application only if sealant adhesion and compatibility have been tested and verified using substrate, water repellent, and sealant materials identical to those used in the work.

E. Test Application: Before performing water-repellent work, including bulk purchase and delivery of products, prepare a small application in an unobtrusive location and in a manner approved by Architect to demonstrate the final effect (visual, physical, and chemical) of planned application. Proceed with work only after Architect approves test application or as otherwise directed.

3.4 APPLICATION

A. Apply a heavy-saturation spray coating of water repellent on surfaces indicated for treatment using low-pressure spray equipment. Comply with manufacturer's written instructions for using airless spraying procedure, unless otherwise indicated.

1. Architectural Precast Concrete: At Contractor's option, first application of water repellent on precast concrete units may be completed before installing units. Mask sealant-bond surfaces to prevent water repellent from migrating onto joint surfaces.

B. Apply a second saturation spray coating, repeating first application. Comply with manufacturer's written instructions for limitations on drying time between coats and after rainstorm wetting of surfaces between coats. Consult manufacturer's technical representative if written instructions are not applicable to Project conditions.

3.5 FIELD QUALITY CONTROL

A. Manufacturer's Field Service: Manufacturer's qualified technical representative shall periodically inspect Work to ensure installation is proceeding in accordance with manufacturer's designs, recommendations, instructions, and warranty requirements. Representative shall submit written reports of each visit indicating observations, findings, and conclusions of inspection.

1. Manufacturer's Technical Representative Qualifications: Direct employee of technical services department of manufacturer with experience in providing recommendations, observations, evaluations, and problem diagnostics.

3.6 CLEANING

A. Protective Coverings: Remove protective coverings from adjacent surfaces and other protected areas.

B. Immediately clean water repellent from adjoining surfaces and surfaces soiled or damaged by water-repellent application as work progresses. Repair damage caused by water-repellent application. Comply with manufacturer's written cleaning instructions.

3.7 SCHEDULE

A. Apply water repellents to following areas:

1. Architectural precast concrete panels.

END OF SECTION

SECTION **07 2100**

THERMAL INSULATION

PART 1 - GENERAL

1.1 SUMMARY

A. Section Includes: Thermal insulation products and systems and supplementary items necessary for installation.

1.2 DEFINITIONS

A. Mineral Fiber: Insulation composed principally of fibers manufactured from rock, slag or glass, with or without binders.

B. Mineral Wool: A synthetic vitreous fiber insulation make by melting predominantly igneous rock, and or furnace slag, and other inorganic material, and then physically forming the melt into fibers

1.3 ACTION SUBMITTALS

A. Product Data: Manufacturer's technical literature for each product and system indicated.

1. Include manufacturer's specifications for materials, finishes, construction details, installation instructions, and recommendations for maintenance.

1.4 INFORMATIONAL SUBMITTALS

A. Qualification Data:

1. For firms and persons specified in "Quality Assurance" to demonstrate their capabilities and experience. Include list of completed projects

B. Manufacturer’s Project Acceptance Document: Certification by the manufacturer that its product(s) are approved, acceptable, suitable for use in specific locations, for specific details, and for applications indicated, specified, or required.

1.5 PRE-INSTALLATION CONFERENCE

A. Pre-Installation Conference: Before Work begins, conduct conference at Project site.

1. Participants:

a. Architect.
b. Contractor, including superintendent.
c. Installer, including project manager and supervisor.
d. If requested, Manufacturer's qualified technical representative.
e. Installers of other construction interfaced with Work.

2. Minimum Agenda: Installer shall demonstrate understanding of the Work required by describing detailed procedures for preparing, installing, and cleaning the Work. Demonstration shall include, but not be limited to, following topics:

    a. Tour representative areas of Work, inspect and discuss condition of substrate, and other preparatory work performed by other trades.
    b. Review Contract Document requirements.
    c. Review approved submittals.
    d. Review inspection and testing requirements.
    e. Review environmental conditions and procedures for coping with unfavorable conditions.
    f. Resolve deviations or differences between Contract Documents and the manufacturer's specifications.

3. Record discussions, including decisions and agreements, and prepare report.

1.6 DELIVERY, STORAGE, AND HANDLING

A. Protect insulation materials from physical damage and from deterioration by moisture, soiling, and other sources. Store inside and in a dry location. Comply with manufacturer's written instructions for handling, storing, and protecting during installation.

B. Protect plastic insulation as follows:

1. Do not expose to sunlight, except to extent necessary for period of installation and concealment.
2. Protect against ignition at all times. Do not deliver plastic insulating materials to Project site before installation time.
3. Complete installation and concealment of plastic materials as rapidly as possible in each area of construction.

1.7 COORDINATION

A. Coordinate installation of products and systems with interfacing and adjoining construction to provide a successful installation without failure.

PART 2 - PRODUCTS

2.1 MANUFACTURERS AND PRODUCTS

A. Acceptable Manufacturers and Products: Subject to compliance with requirements of Contract Documents as judged by the Architect, provide product by one of manufacturers listed. If not listed, submit as substitution according to Conditions of the Contract and Division 01 Section "Substitution Procedures".

B. Basis of Design (Product Standard): Contract Documents are based on products and systems specified to establish a standard of quality. Other manufacturers offering products having equivalent characteristics may be considered, provided deviations are minor and comply with requirements of Contract Documents as judged by the Architect.

2.2 MATERIALS, GENERAL

A. Single Source Responsibility: Furnish each type of product from single manufacturer. Provide secondary materials only as recommended by manufacturer of primary materials.

B. General: Provide insulating materials that comply with requirements and referenced standards in sizes to fit applications indicated, selected from manufacturer's standard thicknesses, widths, and lengths.

2.3 PERFORMANCE REQUIREMENTS

A. Plenum Rating: Provide glass mineral fiber (fiberglass) insulation to be installed within ceiling plenums rated as follows for use in plenums as determined by testing identical products per "Erosion Test" and "Mold Growth and Humidity Test" described in UL 181, or by comparable tests from another standard acceptable to authorities having jurisdiction.

1. Erosion Test Results: No visible evidence of cracking, flaking, peeling, or delamination of interior surface of duct assembly, after testing for 4 hours at 2500 fpm (13 m/s) air velocity.
2. Mold Growth and Humidity Test Results: No evidence of mold growth, delamination, or other deterioration due to the effects of high humidity, after inoculation with Chaetomium globosium on all surfaces and storing for 60 days at 100 percent relative humidity in the dark.

B. Fire-Test-Response Characteristics:

1. Fire Resistance Ratings: Materials and construction identical to assemblies tested for fire resistance according to ASTM E 119/NFPA 251/UL 263 and included under Categories listed below that are published in Underwriters Laboratories, Inc. (UL) "Fire Resistance Directory"; or listing of another testing and inspecting agency acceptable to authorities having jurisdiction.

    a. Polystyrene Insulation: Category CCVW.
    b. Mineral Fiber Insulation: Category BZJZ

2. Surface Burning Characteristics: Materials and construction identical to assemblies tested for fire resistance according to ASTM E 84/NFPA 255/UL 723 by an independent testing and inspecting agency acceptable to authorities having jurisdiction listed below. Identify products with appropriate markings of applicable testing agency.
3. Fire Rated Assembly Design: Selected from Product Category BXUV published in UL's "Fire Resistance Directory", or design of other testing agency acceptable to authorities having jurisdiction.
4. Combustion Characteristics: Materials and construction identical to assemblies tested for fire resistance according to ASTM E 136 by an independent testing and inspecting agency acceptable to authorities having jurisdiction

2.4 GLASS MINERAL FIBER (FIBERGLASS) BATT INSULATION

A. Unfaced Insulation:

1. Description: ASTM C 665, Type I, ASTM C553, Type II. Unfaced blankets produced by bonding inorganic glass mineral fibers with a thermosetting binder; free of formaldehyde.
2. Manufacturers and Products:

a. CertainTeed Corporation; CertaPro Sustainable Insulation.
b. Johns Manville; Unfaced Batts for Metal Framing.
c. Knauf Insulation; EcoBatt with ECOSE Technology.
d. Owens-Corning; EcoTouch Thermal Batts for Metal Frame Construction.

3. Surface Burning Characteristics per ASTM E 84:

a. Flame spread: 25 or less.
b. Smoke developed: 50 or less.

4. Thickness: Full depth of metal stud cavity.

2.5 GLASS MINERAL FIBER (FIBERGLASS) SEMI-RIGID INSULATION

A. Description: ASTM C 612, Type IA or Types IA and IB. Unfaced, semi-rigid boards produced by bonding inorganic glass mineral fibers with a thermosetting binder.

B. Manufacturers and Products:

1. CertainTeed Corporation; CB-300.
2. Johns Manville; Insul-SHIELD 300.
3. Knauf Insulation; Insulation Board with Ecose Technology; 3.00 PCF.
4. Owens-Corning; 703.

C. deg F (29.8 K x m/W at 24 deg C).

D. Surface-Burning Characteristics per ASTM E 84:

1. Flame spread: 25 or less.
2. Smoke developed:

a. Exposed-to-View or Concealed Spaces other than Return Air Plenums: 450 or less.
b. Return Air Plenums: 50 or less.

E. Thickness: As indicated but not less than 2 in (50 mm).

F. Other-than-Cavity Wall Locations:

1. Unfaced: ASTM C 612, Types IA and IB. Unfaced rock mineral wool board insulation.

a. Location: Typical unless noted to be foil-faced.

2. Foil-Faced: ASTM C 612, Types IA and IB. Rock mineral wool board insulation faced with foil-scrim-kraft vapor-retarder membrane.

a. Location: Where indicated on drawings for non-fire-rated perimeter conditions and/or for spandrel insulation.

3. Density: Nominal density of 4 lb/cu. ft. (64 kg/cu. m), thermal resistivity of 4 deg F x h x sq. ft./Btu x in. at 75 deg F (27.7 K x m/W at 24 deg C).
4. Surface Burning Characteristics per ASTM E 84:

a. Flame spread: 25 or less.

b. Smoke developed: 50 or less.

5. Thickness: As indicated on drawings but not less than required for an R-value of 19.
6. Fiber Color: Regular color, unless otherwise indicated.
7. Manufacturers:

a. Rock Wool Manufacturing Company.
b. Roxul, Inc.
c. Themafiber, Inc.

2.6 EXTRUDED POLYSTYRENE RIGID INSULATION

A. Description: Unfaced, rigid, cellular polystyrene thermal insulation formed from polystyrene base resin by an extrusion process, and with other requirements indicated in this Article.

1. Surface Burning Characteristics per ASTM E 84:

a. Flame Spread: 25 or less.
b. Smoke Developed: 450 or less.

2. Adhesive for Bonding Insulation: Product compatible with insulation being bonded and with demonstrated capability to bond insulation securely to substrates indicated without damaging insulation or substrates.

B. Cavity Wall Locations:

1. Product Quality Standard: ASTM C 578, Type IV, 25 psi minimum compressive strength.
2. Size: 2 in (50 mm) thick by 16 in (400 mm) high by 96 in (2400 mm) long, square edges.
3. R-Value: 10
4. U-Value: 0.1
5. Manufacturers and Products:

a. Dow Chemical Company; Styrofoam CavityMate Plus
b. Owens Corning; FOAMULAR CW25
c. Pactiv Building Products Division; GreenGuard Type IV 25.

C. Other-than-Cavity Wall Locations:

1. Product Quality Standard: ASTM C 578 of following type and minimum compressive strength for the following locations:

a. Slabs-on-Grade: Type VI, 40 psi (276 kPa).
b. Backfilled Walls: Type IV, 25 psi (173 kPa).

2. Manufacturers and Products:

a. Type IV:

1) DiversiFoam Products; CertiFoam 25.
2) Dow Chemical Company; STYROFOAM Square Edge.
3) Owens Corning; FOAMULAR 250.
4) Pactiv Building Products Division; GreenGuard Type IV 25.

b. Type VI:

1) DiversiFoam Products; CertiFoam 40.
2) Dow Chemical Company; STYROFOAM Roofmate or Highload 40.
3) Owens Corning; FOAMULAR 400 or 404.

3. Thickness: As indicated but not less than 2 in (50 mm).

2.7 POLYISOCYANURATE RIGID INSULATION

A. Refer to Division 07 roofing section(s) for polyisocyanurate rigid insulation used as roofing insulation.

2.8 SPRAYED FOAM INSULATING GAP FILLER

A. As specified in Division 07 Section "Joint Sealants".

2.9 SPRAY-APPLIED THERMAL INSULATION

A. Spray-Applied Thermal Insulation:

1. Description: Glass mineral fiber insulation spray applied for thermal or acoustic applications.

a. Thermal Resistance: ASTM C 518; R-Factor = 4 per 1 in (25 mm).
b. Noise Reduction Coefficient: ISO 354; NRC 0.75 at 1 in (25 mm), 0.95 at 2 in (50 mm)

2. Surface Burning Characteristics:

a. Flame spread: Class A; 25 or less.
b. Smoke developed:

1) Exposed-to-View or Concealed Spaces other than Return Air Plenums: 450 or less.
2) Return Air Plenums: 50 or less.

3. Thickness: As indicated on drawings but not less than required for an R-value of 19.
4. Density: As required for application.
5. Manufacturer and Product: Monoglass Incorporated; Monoglass Spray-On Insulation, white color.

B. Spray-Applied Protective Coating: Manufacturers' standard protective coating for sealing a tamped insulation surface.

1. Locations: Installations exposed to view in finished construction and for installations in crawl spaces; and not indicated to have a vapor retarder.

2. Manufacturer and Product: Monoglass Incorporated; Insulseal, medium coating; color to be selected.

PART 3 - EXECUTION

3.1 EXAMINATION

A. Acceptance of Surfaces and Conditions: Examine substrates to which thermal insulation will be applied for compliance with requirements and other conditions affecting performance. Proceed only when unsatisfactory conditions have been corrected in a manner complying with Contract Documents. Starting Work within a particular area will be construed as acceptance of surface conditions.

3.2 INSTALLATION, GENERAL

A. Installation Quality Standards: In addition to standards listed elsewhere, perform Work according to following, unless otherwise specified:

1. Respective manufacturer's written installation instructions.
2. Accepted submittals.
3. Contract Documents.

B. General Requirements:

1. Install insulation that is undamaged, dry, and unsoiled and that has not been left exposed at any time to ice, rain, or snow.
2. Comply with insulation manufacturer's written instructions applicable to products and application indicated.
3. Extend insulation in thickness indicated to envelop entire area to be insulated. Cut and fit tightly around obstructions and fill voids with insulation. Remove projections that interfere with placement.
4. Apply a single layer of insulation to produce thickness indicated, unless multiple layers are otherwise shown or required to make up total thickness.

3.3 PREPARATION

A. General: Comply with manufacturer's instructions, recommendations, and specifications for cleaning and surface preparation. Surfaces shall have no defects, contaminants, or errors which would result in poor or potentially defective installation or would cause latent defects in Work.

3.4 INSTALLATION OF INSULATION SYSTEMS

A. Unfaced Glass Mineral Fiber (Fiberglass) Semi-Rigid and Batt Insulation: Install insulation in cavities formed by framing members according to following:

1. Use insulation widths and lengths that fill the cavities formed by framing members. Where more than one length is required to fill cavity, provide lengths that will produce a snug fit between ends.
2. Place insulation in cavities formed by framing members to produce a friction fit between edges of insulation and adjoining framing members.
3. Where partition will be covered by gypsum board on only one side, apply adhesive to backside of gypsum board that is installed and press insulation in place to form bond to prevent insulation from sagging within cavity.

B. Mineral Wool Semi-Rigid Insulation: Install in cavities formed by framing members according to the following requirements:

1. Cavity Wall Installations:

    a. Use insulation widths and lengths that fill the cavities formed by framing members. If more than one length is required to fill cavity, provide lengths that will produce a snug fit between ends.
    b. Place insulation in cavities formed by framing members to produce a friction fit between edges of insulation and adjoining framing members.

2. Glazed Aluminum Framing System (Curtainwall) Installations:

    a. Hold insulation in place by securing metal clips and straps or integral pockets within window frames, spaced at intervals recommended in writing by insulation manufacturer to hold insulation securely in place without touching spandrel glass. Maintain cavity width of dimension indicated on Drawings between insulation and glass.
    b. Install insulation to fit snugly without bowing.
    c. Install mullion covers, minimum 8 in (200 mm) width of insulation, centered over horizontal and vertical aluminum frames within spandrel area using the same impaling pins as used to attach the curtainwall insulation material. Secure covers with clinch shields over impaling pins.

C. Sprayed Foam Insulating Gap Filler: As specified in Division 07 Section "Joint Sealants".

D. Sprayed-Applied Thermal Insulation: Comply with manufacturer's written instructions for application procedures, and types of equipment used to mix, convey, and spray on insulation material.

1. Cover adjacent work subject to damage from fallout or overspray of insulation materials during application. Provide temporary enclosure as required to confine spraying operations and ensure adequate ambient conditions for temperature and ventilation.
2. Coat substrates with adhesive before applying insulation material where recommended in writing by manufacturer for material and application indicated.
3. Extend insulation material in full thickness over entire area of each substrate to be protected.
4. Spray-apply insulation materials to maximum extent possible. Following the spraying operation in each area, complete the coverage by trowel application or other placement method recommended in writing by manufacturer.
5. Apply insulation material in thicknesses and densities not less than those required to achieve minimum R-value indicated.
6. Maintain profile of substrates except fill voids between members, including voids formed by fluted decks above beams and similar voids.
7. Cure sprayed insulation materials according to manufacturer's recommendations to prevent premature drying.
8. Protective Coating: Board-tamp sprayed insulation and over-spray with protective coating at installations that will be exposed to view in finished construction and for installations in crawl spaces.

    a. Vapor Retarder Coating: Where indicated to have a vapor retarder, install this in lieu of protective coating. Board-tamp sprayed insulation and over-spray with vapor retarder coating.

3.5 PROTECTION

A. Protection: Protect installed insulation and vapor retarders from damage due to harmful weather exposures, physical abuse, and other causes. Provide temporary coverings or enclosures where insulation is subject to abuse and cannot be concealed and protected by permanent construction immediately after installation

END OF SECTION

SECTION 07 2119

SPRAY-APPLIED FOAM INSULATION

PART 1 - GENERAL

1.1 SUMMARY

A. Section Includes: Spray-applied foam installation and supplementary items necessary for a complete installation.

1. Foam Insulation: Closed-cell spray-applied polyurethane foam insulation for the following locations:

a. Interior side of exterior wall assemblies.
b. Underside of elevated slab.
c. Other locations as indicated.

2. Thermal Barrier: Thermal barrier applied to foam insulation for a thermal barrier rating of 15 minutes.

1.2 ACTION SUBMITTALS

A. Product Data: Manufacturer’s technical literature and tested physical and performance properties for each product and system indicated.

1. Include manufacturer's specifications for materials, finishes, construction details, installation instructions, and recommendations for maintenance.
2. Include manufacturer's printed instructions for evaluating, preparing, and treating substrates, temperature and other limitations of installation conditions.

B. Samples: Submit clearly labeled samples, 12 in (300 mm) square of spray-applied thermal insulation on rigid backing and 3 by 4 inch (75 by 100 mm) minimum size of each additional material specified or required.

C. Shop Drawings: Show details of fabrication and installation, including plans, elevations, sections, and details of all typical conditions and components and attachments to other work.

1. Show locations and extent of installations.
2. Indicate intersections with other envelope assemblies and materials, and details showing how gaps in the construction will be bridged, how inside and outside corners are negotiated, how materials that cover or intersect the insulation are secured, and how miscellaneous penetrations such as conduits, pipes electric boxes and similar items are sealed.
3. Indicate types of substrate preparations required before applying insulation.

a. Include recommended values for field adhesion test on each substrate.

4. Show minimum thicknesses needed to achieve required thermal rating specified.

5. Thermal Barrier: Include graphic/visual definition of required 15 minute thermal barrier, completely protecting foam insulation, indicating all materials/assemblies used for this purpose. Include definition of thermal barriers and any other fire-protective assemblies/components provided in lieu of thermal barrier. At locations where metal fabrications penetrate foam insulation, or act as a thermal bridge from interior space to spray foam, clearly define method for fire protecting these metal fabrications and preventing unacceptable heat transfer to foam insulation.
6. Details shall include, but not be limited to, installations at the following conditions:

    a. Firestopping sealant at slab edge.
    b. Head, sill, and jamb of punched openings.
    c. Expansion joints, penetrations, roof, and all terminations.
    d. Connections to building structural frame.

1.3 INFORMATIONAL SUBMITTALS

A. Product Test Reports: Written reports based on evaluation of comprehensive tests performed by qualified testing agency indicating that each product complies with requirements.

1. Certificates: Furnish manufacturer's certification that spray insulation is free of asbestos (including actinolite, amosite, anthophyllite, chrysoltile, crocidolite and tremolite), or other toxic materials. Certify product is inert after installation.
2. Compatibility and Adhesion Test Reports: From manufacturer indicating the following:

    a. Compatibility to adjacent materials: Submit letter from manufacturer stating that materials proposed for use are permanently chemically compatible and adhesively compatible with adjacent materials proposed for use. Submit letter from manufacturer stating that cleaning materials used during installation are chemically compatible with adjacent materials proposed for use.
    b. Materials have been tested for bond with substrates.
    c. Materials have been verified by manufacturer to be compatible with substrate primers and coatings.
    d. Interpretation of test results and written recommendations for primers and substrate preparation needed for adhesion.

B. Manufacturer’s Project Acceptance Document: Certification by the manufacturer that its product(s) are approved, acceptable, suitable for use in specific locations, for specific details, and for applications indicated, specified, or required. In addition:

1. Submit letter from primary materials manufacturer indicating approval of products not manufactured by primary manufacturer.
2. Include statement that materials are compatible with adjacent materials proposed for use.
3. Submit evidence indicating that field peel-adhesion test on all materials to which insulation are adhered have been performed and the changes made, if required, to other approved materials, in order to achieve successful adhesion.

C. Qualification Data:

1. For firms and persons specified in "Quality Assurance" to demonstrate their capabilities and experience. Include list of completed projects.

D. Product Test Reports: Written reports based on evaluation of comprehensive tests performed by qualified testing agency indicating that each product complies with requirements.

1. Submit valid Evaluation Service Report (ESR) issued by International Code Council (ICC-ES) for adhered masonry veneer systems used in Project.

E. Field Quality Control Reports: Written report of testing and inspection required by “Field Quality Control”.

F. Daily Reports: Submit daily construction activity reports that also indicate the following:

1. Recorded site temperature and humidity and weather conditions.
2. Spray rig settings.
3. Spray-pass thicknesses.

G. Warranty: Sample of warranty.

1. Provide manufacturer's written warranty covering materials and installation (labor) stating obligations, remedies, limitations and exclusions.

1.4 QUALITY ASSURANCE

A. Manufacturer Qualifications: Manufacturer with not less than 5 years of experience in the successful production and in-service performance of products and systems similar to scope of this Project.

B. Installer Qualifications:

1. Experience: Installer's personnel with not less than 5 years of experience in the successful performance of Work similar to scope of this Project.
2. Supervision: Installer shall maintain a competent supervisor at Project while the Work is in progress, and who has not less than 5 years of experience installing products and systems similar to scope of this Project.
3. Manufacturer Acceptance: Installer shall be certified, approved, licensed, or acceptable to manufacturer to install products.

C. Field Quality Control Testing Agency: Qualified independent testing and inspection agency to perform field tests and inspections and to prepare test reports as indicated in “Field Quality Control" article.

D. VOC Regulations: Provide products which comply with applicable regulations controlling the use of volatile organic compounds.

1.5 MOCK-UPS

A. Mock-ups: Before overall installation of spray insulation, construct an on-site, in-place mockup as required to verify construction methods, demonstrate qualities of materials and execution and to facilitate site testing. Include all components in the assembly, including penetrations and attachments. Build mockups to comply with the following requirements, using exposed and concealed materials indicated for the completed Work.

1. Build mock-up in the location and of the size indicated or, if not indicated, as directed by Architect. Contractor shall provide structural support framework.

    a. Minimum size:

        1) Interior Side of Exterior Wall Assemblies: 10 ft. (3 m) wide by floor-to-floor height; include intersecting floor slab and one representative window.

        2) Underside of Elevated Slab: 10 ft. by 10 ft. (3 m by 3 m); replicate representative penetrations and perimeter conditions.

2. Notify Architect, Third party Inspection Agency, and manufacturer's representative and testing agency 7 days in advance of the dates and times when mockups will be constructed.
3. Obtain approval of mockups from Architect, Third Party Inspection Agency, and manufacturer's representative before proceeding with overall installation of insulation system.
4. Obtain Architect's acceptance of mock-ups before starting fabrication or installation.
5. Acceptance of mock-ups does not constitute acceptance of deviations from the Contract Documents contained in mock-ups unless such deviations are specifically noted by Contractor and accepted by Architect in writing.
6. Demolish and remove mock-ups when directed by Architect unless accepted to become part of the completed Work.

B. Phased, Two-Part Installations: Site mockup should be constructed in phases that include the following:

    1. Phase 1: Complete installation of foam insulation at mock-up location.
    2. Phase 2: Complete installation of thermal barrier over foam installation.
    3. Testing and approvals shall be obtained for each phase prior to proceeding to the next phase or proceeding with overall installation of products.

C. Detail Review of Perimeter Firestops at Floor Line: At floor line edge of perimeter firestop system inspect mock up for damage or deformation to firestop system by foam insulation expansion during installation. After foam has cured, cut out and remove foam at this area and inspect integrity of firestop. If foam has affected the integrity of the firestop provide sheet metal angle above firestop to prevent downward expansion of foam insulation.

D. Testing for Adhesion: Test site mock-up of materials for adhesion in accordance with manufacturer's recommendations. Perform test after curing period recommended by the manufacturer. Record mode of failure and area which failed in accordance with ASTM D 4541. Material manufacturer has established a minimum adhesion level for the product on the particular substrate; the inspection report shall indicate whether this requirement has been met.

    1. Include test area at window anchor system (adhesion to metal anchor).

E. Sampling for Dimensional Stability: Coordinate with testing agency for removal of representative samples from the mock-up application for laboratory testing of foam insulation dimensional stability. Testing agency will perform test in accordance with ASTM D2126 - Standard Test Method for Response of Rigid Cellular Plastics to Thermal and Humid Aging, except as modified herein:

1. Obtain dimensional stability test report from foam insulation manufacturer for specified foam insulation. Perform dimensional stability testing in accordance with ASTM D2126, date of standard as used for manufacturer's testing.
2. Perform ASTM D2126 test procedure at exposure conditions listed in manufacturer's dimensional stability test report.
3. Cut sample specimens from larger pieces of foam and immediately begin testing. Do not wait for "aging" period.
4. Report change in mass and dimensions at 3 days and 28 days, in addition to the exposure time recommended in ASTM D2126.
5. Photograph samples prior to conditioning and at each stage of testing procedure. Label and save photos according to date and sample number. Submit photographs and report data for review.
6. Foam insulation will be deemed of acceptable quality if change in volume (dimensional stability) does not exceed, by shrinkage or expansion, the manufacturers reported foam insulation percent volume change.

1.6 PRE-INSTALLATION CONFERENCE

A. Pre-Installation Conference: Before Work begins, conduct conference at Project site.

1. Participants:

   a. Architect.
   b. Contractor, including superintendent.
   c. Installer, including project manager and supervisor.
   d. If requested, Manufacturer's qualified technical representative.
   e. Installers of other construction interfaced with Work.
   f. If requested, testing and inspection agencies.

2. Minimum Agenda: Installer shall demonstrate understanding of the Work required by describing detailed procedures for preparing, installing, and cleaning the Work. Demonstration shall include, but not be limited to, following topics:

   a. Tour representative areas of Work, inspect and discuss condition of substrate, and other preparatory work performed by other trades.

      1) Review ventilation or "fresh air" requirements.

   b. Review Contract Document requirements.
   c. Review approved submittals of details for the following conditions:

      1) Firestopping sealant slab edge
      2) Head, sill and jambs of punched windows.
      3) Expansion joints, penetrations, roof and terminations.
      4) Intersecting framing members.

   d. Review construction and testing of mock-up, sequence of construction, coordination with substrate preparation, materials approved for use, compatibility of materials, coordination with installation of adjacent and covering materials, and details of construction.

      1) Review requirements of substrate to be dry and procedures to achieve this.
      2) Review adjacent surface protection and clean-up procedures and materials.

3) Review procedures to remedy voids that are identified after installation.

e. Review inspection and testing requirements.
f. Review environmental conditions and procedures for coping with unfavorable conditions.
g. Resolve deviations or differences between Contract Documents and the manufacturer's specifications.

3. Record discussions, including decisions and agreements, and prepare report.

1.7 DELIVERY, STORAGE, AND HANDLING

A. Deliver materials to Project site in original packages or containers with seals unbroken, labeled with manufacturer's name, product, date of manufacture, and directions for storage.

B. Do not expose to sunlight, except to extent necessary for period of installation and concealment.

C. Protect against ignition at all times. Minimize the time that insulating materials are stored at project site before installation.

1.8 PROJECT CONDITIONS

A. Temperature and humidity: Install within ambient temperature and humidity range and substrate temperatures recommended by foam insulation and thermal barrier manufacturers. Do not apply to a damp or wet substrate.

B. Field Conditions: Do not install in snow, rain, fog, or mist.

1.9 COORDINATION

A. Coordinate installation of products and systems with interfacing and adjoining construction to provide a successful installation without failure.

1.10 WARRANTY

A. Manufacturer's Warranty: Furnish manufacturer's written material and labor warranty signed by an authorized representative using manufacturer's standard form agreeing to furnish materials and labor required to repair or replace work which exhibits material defects caused by manufacture or design of product. "Defects" are defined to include but not limited to deterioration or failure to perform as required.

1. Warranty Period: Manufacturer shall warrant the products to be free from material and labor Defects for the period stated below commencing from date of Substantial Completion

a. Foam Insulation: 10 years.

b. Thermal Barrier: 2 years.

B. Installer's Warranty: Furnish installer's written workmanship warranty signed by an authorized representative using installer's standard form agreeing to provide labor required to repair or replace work which exhibits workmanship defects. "Defects" is defined to include but not limited to deterioration or failure to perform as required.

1. Warranty Period: Installer shall warrant the installation to be free from workmanship Defects for a period of 2 years from date of Substantial Completion.

PART 2 - PRODUCTS

2.1 MANUFACTURERS AND PRODUCTS

A. Acceptable Manufacturers and Products: Subject to compliance with requirements of Contract Documents as judged by the Architect, provide product by one of manufacturers listed. If not listed, submit as substitution according to the Conditions of the Contract and Division 01 Section "Substitution Procedures".

B. Available Manufacturers and Products: Subject to compliance with requirements of Contract Documents as judged by the Architect, manufacturers offering products that may be incorporated into the Work include, but are not limited to, those listed.

1. Foam Insulation:

a. NCFI Polyurethanes; INSULSTAR.
b. BASF; WALLTITE US.
c. Demilec (USA) LLC; HEATLOK Soy 200 Plus.
d. JM Johns Manville; JM CORBOND III.

2. Thermal Barrier:

a. Spray-Applied Cellulose Thermal Barrier: International Cellulose Corporation; Ure-K Thermal Barrier System.

2.2 MATERIALS, GENERAL

A. Single Source Responsibility: Furnish each type of product from single manufacturer. Provide secondary materials only as recommended by manufacturer of primary materials.

2.3 PERFORMANCE REQUIREMENTS

A. Foam Insulation: Materials shall meet or exceed the following performance requirements as indicated in the test reports.

1. Aged R-value: Minimum 6.2 per inch (per 25 mm), per ASTM C518.
2. Density: Nominal 2 lb/cu. ft. (24 kg/cu. m), per ASTM D1622.
3. Surface-Burning Characteristics: When tested according to ASTM E 84:

a. Flame Spread: Less than 25.
b. Smoke Developed: Less than 450.

4. Fire Propagation Characteristics: Passes both NFPA 259 and NFPA 285 testing as part of an approved assembly.
5. Movement: Accommodate movements of building materials, capable of withstanding positive and negative combined design wind, fan and stack pressures on the envelope without damage or displacement, doesn't displace adjacent materials, and allows for the relative movement of assemblies due to thermal and moisture variations and creep, and anticipated movement.

B. Thermal Barrier: Provide thermal barrier coatings, including primer and topcoats if required, with thermal barrier response characteristics indicated, as determined by testing identical products according to test method by testing agency indicated below. Identify containers containing thermal barrier coatings with appropriate markings of applicable testing and inspecting agency.

1. Surface-Burning Characteristics: When tested according to ASTM E 84:

   a. Flame Spread: Less than 25.
   b. Smoke Developed: Less than 450.

2. ASTM E119/UBC 26-2 Test Method for the Evaluation of Thermal Barriers.

   a. Thermal Rating over Foam Insulation: 15 Minutes.

3. Bond Strength Minimum: 280 psi (1931 k Pa) per ASTM D 4541.
4. Hazardous Substances: Provide products containing no detectable asbestos.
5. VOC Content of Field-Applied Interior Paints and Coatings: Provide products that comply with the following limits for VOC content, exclusive of colorants added to a tint base, when calculated according to 40 CFR 59, Subpart D (EPA Method 24); these requirements do not apply to paints and coatings that are applied in a fabrication or finishing shop:

   a. Flat Paints, Coatings, and Primers: 50 g/L.
   b. Nonflat Paints, Coatings, and Primers: 150 g/L.
   c. Primers, Sealers, and Undercoaters: 200 g/L.

2.4 THERMAL BARRIER

A. Material Compatibility: Thermal barrier and primer or topcoat products shall be compatible with one another and with substrates indicated under conditions of service and application, as demonstrated by manufacturer based on testing and laboratory analysis.

B. Usage Limitation: Thermal barrier coatings may be applied only in exposure environments listed in thermal barrier assembly design selected. Coatings rated for interior exposures shall not be applied in exterior exposures.

C. Spray-Applied Intumescent Thermal Barrier Coating: Manufacturer’s standard factory-mixed formulated, multi-coat system of products complying with thermal barrier performance requirements.

1. Primer for Interior Applications: Product selected from Intumescent thermal barrier manufacturer’s list of acceptable primers or provided by manufacturer.

2. Intumescent Coating: Single or multiple component coating that when applied is a relatively thin, paint-like film but when exposed to fire forms a thick, puffy, inert, charred-surface protectant that thermally insulates spray polyurethane.
3. Topcoat for Interior Applications: (If required by manufacturer/installer) Product selected from Intumescent thermal barrier manufacturer's list of acceptable topcoats or provided by manufacturer. Provide only as required by manufacturer for additional protection based on actual site conditions.

D. Spray-Applied Cellulose Thermal Barrier Coating: Manufacturer's standard factory-mixed formulated, single-coat system of cellulosic coating fibers combined with a binder or liquid adhesive. Products shall comply with complying thermal barrier performance requirements.

1. Primer for Interior Applications (if required by manufacturer): Product selected from cellulose thermal barrier manufacturer's list of acceptable primers or provided by manufacturer.

2.5 AUXILLARY MATERIALS

A. Sprayed Foam Insulating Gap Filler:

1. Description: Low pressure, one-component, expanding, closed-cell polyurethane insulating foam gap filler; applied with professional hand-held dispensing gun; CFC and HCFC free.
2. Performance Requirements: Class 1 Fire-Retardant per ASTM E 84.
3. Manufacturers and Products:

a. BASF; Foam Sealant.
b. Dow Chemical Co.; Great Stuff Pro.

B. Metal Angle at Firesafing (Required usage based on Mock-Up Review): 0.1875 in (4.8 mm) thick aluminum or galvanized steel angle.

C. Precast Joint Materials: Provide one of the following options:

1. Manufacturer's recommendation.
2. Additional backer rod. Refer to Division 07 Section "Joint Sealants".
3. Release Tape: 0.006 in (0.15 mm) thick polyethylene tape, adhesive backed on one side, width as required.

PART 3 - EXECUTION

3.1 EXAMINATION

A. Acceptance of Surfaces and Conditions: Examine substrates to which thermal insulation will be applied, with Installer present, for compliance with requirements and other conditions affecting performance. Proceed only when unsatisfactory conditions have been corrected in a manner complying with Contract Documents. Starting Work within a particular area will be construed as acceptance of surface conditions.

1. If applying to cast-in-place concrete, do not proceed with installation until after minimum concrete curing period recommended by insulation manufacturer.

2. Ensure that the following conditions are met:

    a. Surfaces are sound, dry, even, and free of oil, grease, dirt, excess mortar or other contaminants
    b. Concrete surfaces are cured and dry, smooth without large voids, spalled areas or sharp protrusions.

3. Verify substrate is visibly dry and free of moisture. Test for capillary moisture by plastic sheet method according to ASTM D4263 until substrate passes.

3.2 INSTALLATION, GENERAL

A. Installation Quality Standards: In addition to standards listed elsewhere, perform Work according to following, unless otherwise specified:

1. Manufacturer's current Evaluation Service Report (ESR) as issued by International Code Council (ICC-ES) and written installation instructions.
2. Accepted submittals.
3. Contract Documents.
4. Mock-Up Review and Approval.

3.3 PREPARATION

A. General: Comply with manufacturer's instructions, recommendations, and specifications for cleaning and surface preparation. Surfaces shall be clean, dust-free, dry and have no defects, contaminants, or errors which would result in poor or potentially defective installation or would cause latent defects in Work.

1. Ensure that penetrating work by other trades is in place and complete.
2. Prepare surfaces by brushing, scrubbing, scraping, or grinding to remove loose mortar, dust, oil, grease, oxidation, mill scale and other contaminants which will affect adhesion of the spray polyurethane foam.
3. Wipe down metal surfaces to remove release agents or other non-compatible coatings, using clean sponges or rags soaked in a solvent compatible with the spray polyurethane foam.

4. Verify that precast anchors are in place.

B. Protection from Spray Applied Materials:

1. Mask and cover adjacent areas to protect from overspray.
2. Ensure any required foam stop or back up material are in place to prevent overspray and achieve complete seal.
3. Seal off existing ventilation equipment. Install temporary ducting and fans to ensure exhaust fumes. Provide for make-up air.
4. Erect barriers, isolate area and post warning signs to advise non-protected personnel to avoid the spray area.

3.4 INSTALLATION OF INSULATION SYSTEMS

A. Sprayed Foam Insulating Gap Filler: Apply sprayed foam insulating gap filler within area indicated on drawings using professional hand-held dispensing gun in accordance with manufacturer's written instructions.

1. Prior to installation of foam insulation, apply sprayed foam insulating gap filler to gaps, cracks, cavities, openings, and voids in substrate including annular space around piping, ducts, conduits, wiring, and electrical outlets to seal off potential air drafts.
2. Apply sprayed foam insulating gap filler to window mullions after final application of sprayed materials, as indicated on drawings.
3. After sprayed foam sealant is applied, make flush with face of adjacent wall by using method recommended by manufacturer.

B. Termination Details (if required based on evaluation and approval of Mock-Up): Install metal angle at intersection of floor slab and precast concrete panels,

1. Install metal angle above firesafing to provide a mechanically fastened edge restraint for the foam insulation. Fasten top leg of metal angle to backside of precast panel wall. Ensure bottom leg of metal angle covers entire area of firesafing. Fasten bottom leg of metal angle to concrete floor slab. Do not terminate foam insulation on firesafing. Fill any gaps between metal angle and firestop with sprayed foam insulating gap filler.

C. Spray Application: Install materials in accordance with manufacturer's recommendations and the following:

1. Equipment used shall comply with the manufacturer's recommendations for the specific type of application. Record equipment settings on the Daily Work Record as required by the submittals. Each proportioned unit shall supply only one spray gun.
2. Apply only when surfaces and environmental conditions are within limits prescribed by the material manufacturer.
3. Foam Insulation: Apply in consecutive passes as recommended by manufacturer to thickness as indicated on drawings. Passes shall be not less than 1/2 inch (12 mm) and not greater than 2 inches (50 mm). An additional pass shall only be done after the first pass has had time to cool down.

    a. Apply material in thicknesses not less than those required to achieve minimum R-value indicated.

4. Install within manufacturer's tolerances, but not more than minus 1/4 inch (6 mm) or plus 1/2 inch (12 mm).
5. Do not install within 3 inches (75 mm) of heat emitting devices such as light fixtures.
6. Finished surface of sprayed materials to be free of voids and embedded foreign objects.
7. Trim, as required, any excess thickness that would interfere with the application of covering system by other trades.
8. Cure sprayed materials according to manufacturer's recommendations to prevent premature drying.

3.5 FIELD QUALITY CONTROL

A. Manufacturer's Field Service: Manufacturer's qualified technical representative shall periodically inspect Work to ensure installation is proceeding in accordance with manufacturer's designs, recommendations, instructions, and warranty requirements. Representative shall submit written reports of each visit indicating observations, findings, and conclusions of inspection.

1. Manufacturer's Technical Representative Qualifications: Direct employee of technical services department of manufacturer with experience in providing recommendations, observations, evaluations, and problem diagnostics.

B. Testing Agency: Employ and pay a qualified independent testing agency to perform field quality control. Materials and installation failing to meet specified requirements shall be replaced at Contractor's expense. Retesting of materials and installations failing to meet specified requirements shall be done at Contractor's expense.

1. Thickness: Perform a minimum of one test for each 500 sf (150 sm) area, or partial area, per ASTM E 605.
2. Density: Perform minimum of two tests per ASTM E 605.
3. Bond Strength: Perform minimum of two cohesion and adhesion tests, per ASTM E 736.
4. Shrinkage: Dimensional Stability laboratory testing of foam insulation.
5. If testing finds applications of foam insulation material are not in compliance with requirements, perform additional random testing to determine extent of noncompliance.
6. Remove and replace applications of foam insulation material where test results indicate that it does not comply with specified requirements for cohesion and adhesion and density.
7. Apply additional material per manufacturer's written instructions where test results indicate that thickness does not comply with specified requirements.
8. Patch areas where samples have been removed to maintain insulation thickness.

C. Contractor Responsibilities:

1. Proceed with application for next area only when test and inspection results for previously completed applications show compliance with specified requirements. Tested values must equal or exceed values required for each approved assembly design.
2. Remove and replace applications where test and inspection results indicate it does not comply with specified requirements.
3. Apply additional coatings where test and inspection results indicate application does not comply with specified requirements.
4. Additional testing and inspecting will be performed to determine compliance of replaced or additional work with specified requirements at Contractor's expense.

3.6 PROTECTION AND CLEANING

A. Protection: Protect from damage due to harmful weather exposures, physical abuse, and other causes. Provide temporary coverings or enclosures where installed product is subject to abuse and cannot be concealed and protected by permanent construction immediately after installation

B. Cleaning: Clean spillage and soiling from adjacent construction using cleaning agents and procedures recommended by manufacturer of affected construction and acceptable to the primary material manufacturer.

END OF SECTION

SECTION 07 2400

EIFS

PART 1 - GENERAL

1.1 SUMMARY

A. Work required for this Section includes flexible thin coat (polymer-based; Class PB) exterior insulation and finish system (EIFS) and supplementary items necessary to complete their installation.

1.2 DEFINITIONS

A. EIFS: Exterior Insulation and Finish System

B. Class PB EIFS: As defined by ASTM C 1397 is a "nonload bearing, exterior wall cladding system that consists of an insulation board attached either adhesively, mechanically, or both to the substrate; an integrally reinforced base coat; and a texture protective finish coat."

1.3 ACTION SUBMITTALS

A. Product Data: Manufacturer's technical literature for each product and system indicated.

1. Include manufacturer's specifications for materials, finishes, construction details, installation instructions, and recommendations for maintenance.

B. Shop Drawings: Show details of fabrication and installation, including plans, elevations, sections, details of components and attachments to other work. Distinguish between shop and field-assembled work.

1. Obtain Shop Drawings of adjacent materials and products which penetrate surfaces of EIFS (i.e., windows, doors, etc.). Coordinate EIFS work with shop drawings of penetrating items.

C. Samples for Verification: 24 in (600 mm) square panels for each type of finish-coat color and texture indicated, prepared using same tools and techniques intended for actual work including a typical control joint filled with sealant of color selected.

1.4 INFORMATIONAL SUBMITTALS

A. Product Test Reports: Written reports based on evaluation of comprehensive tests performed by qualified testing agency indicating that each product complies with requirements.

1. Product Approvals: Submit Florida Product Approval or Product Control Notice of Acceptance (NOA) issued by Miami-Dade County Building Code Compliance Office (BCCO) or other product approval acceptable to authorities having jurisdiction for systems used at exterior of building.

B. Qualification Data:

1. For firms and persons specified in "Quality Assurance" to demonstrate their capabilities and experience. Include list of completed projects.

C. Warranty: Sample of warranty.

1. Provide manufacturer's written warranty covering materials and installation (labor) stating obligations, remedies, limitations and exclusions.

D. Compatibility and Adhesion Test Reports: From sealant manufacturer indicating that materials forming joint substrates and joint sealant backings have been tested for compatibility and adhesion with joint sealants. Include joint sealant manufacturer's written interpretation of test results relative to sealant performance and recommendations for primers and substrate preparation needed to obtain adhesion.

E. Research/Evaluation Reports: Evidence of EIFS compliance with building code in effect for Project, from a model code organization acceptable to authorities having jurisdiction.

1.5 MAINTENANCE MATERIAL SUBMITTALS

A. Maintenance Kit: Furnish maintenance kit to Owner to include the following:

1. Printed Maintenance Instructions.
2. Adhesive: One gallon
3. Base Coat Material: 1 gallon (3.8 L)
4. Finish Coat Material: 1 gallon (3.8 L) for each color installed, from same batch as installed.
5. Reinforcing Mesh: 20 sf (1.8 sq m)
6. Insulation Board: 20 sf (1.8 sq m)

1.6 QUALITY ASSURANCE

A. Installer Qualifications:

1. Experience: Installer's personnel with not less than 5 years of experience in the successful performance of Work similar to scope of this Project.
2. Supervision: Installer shall maintain a competent supervisor at Project while the Work is in progress, and who has not less than 5 years of experience installing products and systems similar to scope of this Project.
3. Manufacturer Acceptance: Installer shall be certified, approved, licensed, or acceptable to manufacturer to install products.

B. Testing Agency Qualifications: An independent testing agency with the experience and capability to conduct the testing indicated, as documented according to ASTM E 548.

C. Fire-Test-Response Characteristics: Provide EIFS assemblies and system components with fire-test-response characteristics as determined by testing identical assemblies and components per test method by UL or another testing and inspecting agency acceptable to authorities having jurisdiction. Identify products with appropriate markings of applicable testing and inspecting agency.

D. Preconstruction Laboratory Testing: The Owner will employ and pay a qualified independent testing laboratory to perform the preconstruction testing indicated.

1. Construct mock-up units of the EIFS wall system for testing at the laboratory's test facilities.
2. Mock-ups shall be complete with all components, finishes, and details of construction identical with those proposed for use in the building.
3. Do not take special precautions or use techniques that do not represent those to be used on the building.
4. Mock-ups shall be of sufficient size and configuration to demonstrate adequately the system's performance capabilities. Submit drawings of proposed mock-up to Architect prior to testing.
5. Personnel assembling mock-ups at the laboratory shall be the personnel, to the extent possible, which will perform this work at the project site.
6. Include EIFS, windows, doors, window wall if applicable, sealant joints and other conditions where EIFS abuts dissimilar materials.
7. Schedule testing with sufficient time for analysis of results and to prevent delay in the progress of the Work.
8. Test the EIFS wall system for compliance with requirements specified for performance and test methods.
9. Test Mock-Up to failure and perform a "failure analysis" and subsequent report. Report shall be transmitted to the Owner, Architect, Contractor and EIFS Contractor.

E. Mock-ups: Prior to fabrication and installation, build mock-up for each form of construction and finish required to verify selections made under sample Submittals and to demonstrate aesthetic effects and qualities of materials and execution. Build mock-up using materials indicated for the completed Work.

1. Build mock-up in the location and of the size indicated or, if not indicated, as directed by Architect. Contractor shall provide structural support framework.

    a. Show typical components, attachments to building structure, and requirements of installation.

2. Notify Architect seven days in advance of the dates and times when mock-up will be installed.
3. Obtain Architect's acceptance of mock-ups before starting fabrication or installation.
4. Acceptance of mock-ups does not constitute acceptance of deviations from the Contract Documents contained in mock-ups unless such deviations are specifically noted by Contractor and accepted by Architect in writing.
5. Demolish and remove mock-ups when directed by Architect unless accepted to become part of the completed Work.

1.7 PRE-INSTALLATION CONFERENCE

A. Pre-Installation Conference: Before Work begins, conduct conference at Project site.

1. Participants:

    a. Architect.
    b. Contractor, including superintendent.
    c. Installer, including project manager and supervisor.
    d. If requested, Manufacturer's qualified technical representative.
    e. Installers of other construction interfaced with Work.

2. Minimum Agenda: Installer shall demonstrate understanding of the Work required by describing detailed procedures for preparing, installing, and cleaning the Work. Demonstration shall include, but not be limited to, following topics:

    a. Tour representative areas of Work, inspect and discuss condition of substrate, and other preparatory work performed by other trades.
    b. Review Contract Document requirements.
    c. Review approved submittals.
    d. Review inspection and testing requirements.
    e. Review environmental conditions and procedures for coping with unfavorable conditions.
    f. Resolve deviations or differences between Contract Documents and the manufacturer's specifications.

3. Record discussions, including decisions and agreements, and prepare report.

1.8 PROJECT CONDITIONS

A. Field Measurements: Where products and systems are indicated to fit walls and other construction, verify dimensions by field measurements before fabrication.

B. Environmental Limitations: Do not deliver, store or install system when ambient outdoor air and substrate temperatures are below or falling below minimum temperature recommended by system manufacturer unless temporary protection and heat are provided to maintain ambient temperatures above manufacturers minimum.

1.9 COORDINATION

A. Coordinate installation of EIFS with related Work specified in other Sections to ensure that wall assemblies, including sheathing, flashing, trim, joint sealers, windows, and doors, are protected against damage from the effects of weather, age, corrosion, moisture, and other causes. Do not allow water to penetrate behind EIFS and flashings.

1.10 WARRANTY

A. Manufacturer's Warranty: Furnish manufacturers written material and labor warranty signed by an authorized representative using manufacturer's standard form agreeing to furnish materials and labor required to repair or replace work which exhibits material defects caused by manufacture or design of product. "Defects" are defined to include but not limited to deterioration or failure to perform as required.

1. Coverage of warranty includes but is not limited to the following:

    a. Material defects, including, but not limited to, peeling, cracking, delamination, flaking or similar failures.
    b. Seepage and leakage of water or excessive moisture into the building or wall cavities through the System, EIFS to EIFS and EIFS to dissimilar sealant joints.

2. Warranty Period: Manufacturer shall warrant the products to be free from material and labor Defects for a period of 10 years from date of Substantial Completion.

B. Installer's Warranty: Furnish installer's written workmanship warranty signed by an authorized representative using installer's standard form agreeing to provide labor required to repair or replace work which exhibits workmanship defects. "Defects" is defined to include but not limited to deterioration or failure to perform as required.

1. Warranty Period: Installer shall warrant the installation to be free from workmanship Defects for a period of 3 years from date of Substantial Completion

C. Repair and replace defective work under the terms of the warranty at no cost to the Owner.

PART 2 - PRODUCTS

2.1 MANUFACTURERS AND PRODUCTS

A. Acceptable Manufacturers: Subject to compliance with requirements of Contract Documents as judged by the Architect, provide product by one of manufacturers listed. If not listed, submit as substitution according to the Conditions of the Contract and Division 01 Section "Substitution Procedures".

B. Available Manufacturers: Subject to compliance with requirements of Contract Documents as judged by the Architect, manufacturers offering products that may be incorporated into the Work include, but are not limited to, those listed.

1. Dryvit Systems, Inc.
2. Omega Products International, Inc.
3. Parex
4. Senergy
5. Sto Corp.
6. TEIFS Wall Systems

2.2 PERFORMANCE REQUIREMENTS

A. General: Provide systems that comply with the following performance requirements:

1. Bond Integrity: Free from bond failure within EIFS components or between system and supporting wall construction, resulting from exposure to fire, wind loads, weather, or other in-service conditions.
2. Weathertightness: Resistant to water penetration from exterior into EIFS and assemblies behind it or through them into interior of building that results in deterioration of thermal-insulating effectiveness or other degradation of system and assemblies behind it, including substrates, supporting wall construction, and interior finish.

B. Physical Properties: Provide Class PB EIFS whose physical properties and structural performance comply with the following when tested per methods referenced:

1. Abrasion Resistance: Sample consisting of 1 in (25 mm) thick EIFS mounted on 1/2 in (12 mm) thick gypsum board; cured for a minimum of 28 days; and showing no cracking, checking, or loss of film integrity after exposure to 528 quarts of sand when tested per ASTM D 968, Method A.

2. Accelerated Weathering Characteristics: Sample of size suitable for test equipment and consisting of 1 in (25 mm) thick EIFS mounted on 1/2 in (12 mm) thick gypsum board; cured for 28 days; and showing no cracking, checking, crazing, erosion, blistering, peeling, or delamination after testing for 2000 hours when viewed under five times magnification per either ASTM G 23, Method 1 or ASTM G 53.
3. Absorption-Freeze Resistance: No visible deleterious effects and negligible weight loss after 60 cycles per EIMA 101.01.
4. Mildew Resistance: Sample consisting of finish coat applied to 2 in (50 mm) by 2 in (50 mm) clean glass substrate; cured for 28 days; and showing no growth when tested per ASTM D 3273.
5. Salt-Spray Resistance: Sample consisting of 1 in (25 mm) thick EIFS mounted on 1/2 in (12 mm) thick gypsum board; cured for 28 days; and showing no cracking, checking, crazing, erosion, blistering, peeling, or delamination after testing for 300 hours per ASTM B 117.
6. Tensile Adhesion: No failure in the adhesive, base coat, or finish coat. Minimum 5-psi tensile strength before and after freeze-thaw and accelerated weathering tests per EIMA 101.03.
7. Water Penetration: Sample consisting of 1 in (25 mm) thick EIFS mounted on 1/2 in (12 mm) thick gypsum board; cured for 28 days; and showing no water penetration into the plane of the base coat to expanded polystyrene board interface of the test specimen after 15 minutes at 6.24 lbf/sq. ft. of air pressure difference or 20 percent of positive design wind pressure, whichever is greater, across the specimen during a test period when tested per EIMA 101.02.
8. Impact Resistance: Sample consisting of 1 in (25 mm) thick EIFS when constructed, conditioned, and tested per EIMA 101.86; and meeting or exceeding the following impact classification and range:

    a. Standard Impact Resistance: 25-49 inch-lb.
    b. Medium Impact Resistance: 50-89 inch-lb.
    c. High Impact Resistance: 90-150 inch-lb.

9. Positive and Negative Wind-Load Performance: Sample assembly, 48 in (1200 mm) by 48 in (1200 mm) in size, consisting of studs, sheathing, and 1 in (25 mm) thick EIFS; and showing capability to withstand wind loads indicated when tested per ASTM E 330.

C. Water-/Weather-Resistive-Barrier Coating: With physical properties that comply with the following when tested on substrate per methods referenced:

1. Tensile Adhesion: No failure in bond when 5 samples of water-/weather-resistive coating are applied to substrate and tested at a minimum 15-psi flatwise tensile strength per ASTM C 297.
2. Absorption-Freeze Resistance: No visible deleterious effects and negligible weight loss after 60 cycles per EIMA 101.01.
3. Water Penetration: 3 samples each sized not less than 4 ft (1.22 m) by 8 ft (2.4 m); consisting of coating applied to substrate including a minimum of 2 vertical joints and 1 horizontal joint within sheathing substrate, each joint not less than 0.125 in (3.11 mm) wide; and tested sequentially as follows:

    a. Passing 10 cycles at 80 percent positive design load (design load is defined as ultimate load with a safety factor of 3.0 imposed) as the maximum test load when tested in accordance with ASTM E 1233, Procedure A.

b. No water penetration on the plane of the exterior-facing side of substrate after 75 minutes at 6.24 lbf/sq. ft. of air-pressure difference or 20 percent of positive design wind pressure, whichever is greater, across the specimen during a test period when tested per ASTM E 331.

4. Water Resistance: 3 samples, each sized not less than 4 in (100 mm) by 6 in (150 mm) and consisting of coating applied to substrate, showing no cracking, checking, crazing, erosion, blistering, peeling, or delamination after testing for 14 days per ASTM D 2247.
5. Water Vapor Transmission: Three samples prepared by applying the coating, at recommended thickness, to a nonadhesive surface and removing cured coating film. Average thickness is determined from material density, area, and weight and samples are tested per ASTM E 96 after conditioning at 75 plus or minus 5 deg F and 50 percent relative humidity for 40 hours before testing, with results meeting or exceeding grade requirements in Table 14-1-A of UBC Standard 14-1.

2.3 MATERIALS

A. Single Source Responsibility: Furnish each type of product from single manufacturer. Provide secondary materials only as recommended by manufacturer of primary materials

B. Compatibility: Provide waterproof membrane, adhesive, board insulation, reinforcing meshes, base- and finish-coat materials, sealants, and accessories that are compatible with one another and approved for use by EIFS manufacturer for Project.

C. Colors, Textures, and Patterns of Finish Coat: Comply with the following requirements:

1. Selections: As scheduled or as indicted in Design Selections.

D. Waterproof Membrane and Air Barrier: Provide EIFS manufacturer's highly flexible, fiber reinforced, 100% acrylic polymer based, Portland cement modified waterproof protective coating designed to provide a waterproof, air and weather protective barrier for gypsum sheathing and other approved substrates.

E. Adhesive for Application of Insulation: EIFS manufacturer's standard factory-mixed formulation, compatible with substrate and designed for adhesive attachment of insulation to substrates of type indicated.

F. Molded-Polystyrene Board Insulation: Rigid, cellular thermal insulation formed by expansion of polystyrene resin beads or granules in a closed mold. Comply with EIFS manufacturer's requirements, ASTM C 578 for Type I, and "EIMA Guideline Specification for Expanded Polystyrene (EPS) Insulation Board" for more stringent requirements for material performance and qualities of insulation, including dimensions and permissible variations, and the following:

1. Before cutting and shipping, age insulation in block form by air drying for not less than six weeks or by another method approved by EIMA that produces equivalent results.
2. Provide insulation in boards not more than 24 in (600 mm) by 48 in (1200 mm) and in thickness indicated but not more than 4 in (100 mm) or less than that allowed by ASTM C 1397.
3. Flame-Spread and Smoke-Developed Indexes of 25 and 450 or less, respectively, per ASTM E 84.

G. Reinforcing Mesh: Balanced, alkali-resistant, open-weave glass-fiber mesh treated for compatibility with other EIFS materials, made from continuous multiend strands with retained mesh tensile strength of not less than 120 lbf/in. per EIMA 105.01, complying with ASTM D 578 and the following requirements for minimum weight:

1. Standard Reinforcing Mesh: Not less than 4.0 oz./sq. yd.
2. Intermediate Reinforcing Mesh: Not less than 10 oz./sq. yd.
3. High-Impact-Resistant Reinforcing Mesh: Not less than 15 oz./sq. yd.
4. Strip Reinforcing Mesh: Not less than 3.75 oz./sq. yd.
5. Detail Reinforcing Mesh: Not less than 4 oz./sq. yd.
6. Corner Reinforcing Mesh: Not less than 7.2 oz./sq. yd.

H. Standard Base-Coat Materials: EIFS manufacturer's standard recommended factory-mixed or factory-blended formulation of portland cement, polymer admixture, and inert fillers

I. Waterproof Base-Coat Materials: EIFS manufacturer's standard waterproof mixture of portland cement complying with ASTM C 150, Type I, white or natural color; and manufacturer's standard polymer-emulsion adhesive designed for use indicated.

J. Finish-Coat Materials: EIFS manufacturer's standard factory-mixed mildew resistant formulation of polymer-emulsion binder, colorfast mineral pigments, sound stone particles, and fillers

K. Water: Potable.

L. Flashing Transition Membrane: EIFS manufacturer's standard or product recommended in writing by EIFS manufacturer. One of the following:

1. Flexible Membrane Flashing: Self-adhering, self-sealing rubberized asphalt and polyethylene film composite sheet or tape and primer.
2. Fluid Applied Membrane Flashing: Flexible, water based polymer coating with embedded mesh reinforcement.

M. Soffit Vent: Extruded aluminum soffit vent 2 in (50 mm) wide by continuous. Locate where indicated on drawings.

2.4 ELASTOMERIC SEALANTS

A. Elastomeric Sealant Products: Provide EIFS manufacturer's listed and recommended chemically curing, elastomeric sealant that is compatible with joint fillers, joint substrates, and other related materials, and complies with requirements for products and testing indicated in "EIMA Guide for Use of Sealants with Exterior Insulation and Finish Systems, Class PB" and with requirements in Division 07 Section "Joint Sealants" for products corresponding to description indicated below:

1. Low-modulus silicone sealant.

B. Sealant Color: As scheduled or as indicated in Design Selections.

2.5 MIXING

A. General: Comply with EIFS manufacturer's requirements for combining and mixing materials. Do not introduce admixtures, water, or other materials except as recommended by EIFS manufacturer. Mix materials in clean containers. Use materials within time period specified by EIFS manufacturer or discard.

PART 3 - EXECUTION

3.1 EXAMINATION

A. Acceptance of Surfaces and Conditions: Examine substrates to receive products and systems and associated work for compliance with requirements and other conditions affecting performance. Proceed only when unsatisfactory conditions have been corrected in a manner complying with Contract Documents. Starting work within a particular area will be construed as acceptance of surface conditions.

3.2 INSTALLATION, GENERAL

A. Installation Quality Standards: In addition to standards listed elsewhere, perform Work according to following, unless otherwise specified:

1. Respective manufacturer/fabricator's written installation instructions.
2. Accepted submittals.
3. Contract Documents.

3.3 PREPARATION

A. General: Comply with manufacturer's instructions, recommendations, and specifications for cleaning and surface preparation. Surfaces shall have no defects, contaminants, or errors which would result in poor or potentially defective installation or would cause latent defects in Work.

B. Protect contiguous work from moisture deterioration and soiling caused by application of EIFS. Provide temporary covering and other protection needed to prevent spattering of exterior finish coats on other work.

C. Protect EIFS, substrates, and wall construction behind them from inclement weather during installation. Prevent penetration of moisture behind EIFS and deterioration of substrates.

D. Prepare and clean substrates to comply with EIFS manufacturer's written requirements to obtain optimum bond between substrate and waterproof membrane.

1. Verify vertical and horizontal board joints in sheathing, exposed edges at terminations, and inside and outside corners have been treated with 2 in (50 mm) glass fiber mesh tape.
2. Trowel waterproofing membrane over sheathing board joints, inside and outside corners, exposed edges such as returns at wall openings and allow to dry.
3. Trowel apply waterproofing mixture over the entire wall surface to a uniform thickness of approximately 3/32 in (0.08 m) and allow to completely dry.

4. Once waterproofing has completely dried apply flashing transition membrane at head, jamb and sill of all wall penetrations, top of parapet if applicable and changes in substrate.

3.4 INSTALLATION OF INSULATION

A. Comply with ASTM C 1397 and EIFS manufacturer's written instructions for installation of system as applicable to each type of substrate indicated.

B. Treat exposed edges of insulation board at terminations and openings as follows:

1. Wrap edges after installing insulation board and before applying field-applied reinforcing mesh.
2. Wrap mesh of width required to extend not less than 2-1/2 in (62 mm) onto substrate behind insulation board, cover insulation board edge, and extend not less than 2-1/2 in (62 mm) onto insulation board face.
3. Wrap edges of insulation board, except those forming substrates of sealant joints, by encapsulating with base coat, reinforcing mesh, and finish coat.
4. Wrap edges of insulation board forming substrates of sealant joints within system or between system and other work by encapsulating with base coat and reinforcing mesh.

C. Apply adhesive to insulation in a manner that results in full adhesive coating to back surface of insulation once insulation is adhered to waterproof membrane on sheathing.

D. Press and slide insulation board into place. Apply pressure over the entire surface of the insulation board to accomplish uniform contact, high initial grab, and an overall level surface.

E. Allow adhered insulation to remain undisturbed for period recommended by EIFS manufacturer, but not less than 24 hours, before beginning rasping and sanding insulation, or applying base coat and reinforcing mesh.

F. Apply insulation boards over dry substrates in courses with long edges oriented horizontally. Begin first course from a level base line and work upward.

G. Stagger vertical joints in successive courses to produce running bond pattern. Locate joints so no piece of insulation is less than 12 in (300 mm) wide or 6 in (150 mm) high. Offset joints not less than 6 in (150 mm) from corners of window and door openings.

1. Offset joints of insulation not less than 6 in (150 mm) from horizontal and 4 in (100 mm) from vertical joints in sheathing.
2. Offset joints of insulation not less than 4 in (100 mm) from aesthetic reveals.
3. Interlock ends at internal and external corners.

H. Abut boards tightly at joints within and between each course to produce flush, continuously even surfaces without gaps or raised edges between insulation boards. If gaps greater than 1/16 in (1.5 mm) occur, fill with insulation cut to fit gaps exactly; insert insulation without using adhesive or other material.

I. Cut insulation to fit openings, corners, and projections precisely and to produce edges and shapes complying with details indicated. Install foam shapes attached to supporting substrate, where indicated.

J. Rasp or sand flush entire surface of insulation to remove irregularities projecting more than 1/32 in (0.8 mm) from surface of insulation and to remove yellowed areas due to sun exposure; do not create depressions deeper than 1/16 in (1.5 mm).

K. Cut aesthetic reveals in outside face of insulation with high-speed router and bit configured to produce grooves, rabbets, and other features that comply with profiles and locations indicated. Do not reduce insulation thickness at features to less than 3/4 in (19 mm).

L. Form joints for sealant application by leaving gaps between adjoining insulation edges and between insulation edges and dissimilar adjoining surfaces. Make gaps wide enough to produce joint widths indicated after encapsulating joint substrates with base coat and reinforcing mesh.

1. Interrupt insulation for expansion joints where indicated.

M. Coordinate flashing installation with installation of insulation to produce a wall system that does not allow water to penetrate behind waterproof coating.

3.5 INSTALLATION OF FINISH SYSTEM

A. Apply base coat in two application's to exposed surfaces of insulation in minimum thickness recommended in writing by EIFS manufacturer, but not less than 1/16 in (1.5 mm) dry-coat total thickness.

B. Embed reinforcing mesh of type and classification indicated below in wet base coat to produce wrinkle-free installation with mesh continuous at corners and overlapped not less than 2-1/2 in (62 mm) or otherwise treated at joints to comply with ASTM C 1397 and EIFS manufacturer's written requirements. Do not lap reinforcing mesh within 8 in (200 mm) of corners. Completely embed mesh, applying additional base-coat material if necessary, so reinforcing-mesh color and pattern are not visible.

1. Locations:

a. Standard Reinforcing Mesh: Typical unless noted or scheduled for a higher mesh.
b. Intermediate Reinforcing Mesh: Where indicated or required.
c. High-Impact-Resistant Reinforcing Mesh: Areas and facades exposed to abnormal stress or deliberate impacts including the following.

1) Facades abutting grade or paved areas to 7 feet (2.1 m) above grade or to the first horizontal breakpoint above 7 feet (2.1 m).
2) Balconies and/or terraces, full height.
3) Freestanding columns, full height.

C. Double-Layer Application: Where indicated, to obtain higher impact resistance apply second base coat and second layer of reinforcing mesh, in the same manner as first application. Do not apply until first base coat has cured.

D. Additional Reinforcing Mesh: Apply strip reinforcing mesh around openings extending 4 in (100 mm) beyond perimeter. Apply additional 9 in (255 mm) by 12 in (300 mm) strip reinforcing mesh diagonally at corners of openings (re-entrant corners). Apply 8 in (200 mm) wide strip reinforcing mesh at both inside and outside corners, unless base layer of mesh is lapped not less than 4 in (100 mm) on each side of corners.

1. At aesthetic reveals, apply strip reinforcing mesh not less than 8 in (200 mm) wide.
2. Embed strip reinforcing mesh in base coat before applying first layer of reinforcing mesh.
3. Shapes: Fully embed reinforcing mesh in base coat.

E. Apply finish coat over dry base coat, maintaining a wet edge at all times for uniform appearance, in thickness required by EIFS manufacturer to produce a uniform finish of color and texture matching approved sample and free of cold joints, shadow lines, and texture variations.

3.6 INSTALLATION OF JOINT SEALANTS

A. Prepare joints and apply sealants, of type and at locations indicated, to comply with applicable requirements in Division 07 Section "Joint Sealants" and in "EIMA Guide for Use of Sealants with Exterior Insulation and Finish Systems, Class PB."

1. Clean surfaces to receive sealants to comply with indicated requirements and EIFS manufacturer's written instructions.
2. Apply primer recommended in writing by sealant manufacturer for surfaces to be sealed.
3. Install sealant backing to control depth and configuration of sealant joint and to prevent sealant from adhering to back of joint.
4. Apply masking tape to protect areas adjacent to sealant joints. Remove tape immediately after tooling joints, without disturbing joint seal.
5. Apply joint sealants after base coat has cured but before applying finish coat.

3.7 CLEANING AND PROTECTING

A. Remove temporary covering and protection of other work. Promptly remove coating materials from window and door frames and other surfaces outside areas indicated to receive EIFS coatings.

B. Provide final protection and maintain conditions, in a manner acceptable to Installer and EIFS manufacturer that ensure system is without damage or deterioration at the time of Substantial Completion.

3.8 FINISH SCHEDULE

A. Color and Texture / Sealant Color: Match existing.

END OF SECTION

SECTION 07 2600

UNDER-SLAB VAPOR RETARDER FOR CONCRETE SLABS-ON-GRADE

PART 1 – GENERAL

1.1 SUMMARY

A. Products Supplied Under This Section

1. Vapor Retarder, seam tape, mastic, pipe boots for installation under concrete slabs.

1.2 RELATED WORK SPECIFIED ELSEWHERE

A. Cast-in-place Concrete - Section 03 3000

B. Concrete Forming and Accessories - Section 03 2000

C. Earthwork for Building Construction - Section 31 23 11

1.3 REFERENCES

A. American Society for Testing and Materials (ASTM), latest versions.

1.	ASTM E 96/ E96M	Standard Test Methods for Water Vapor Transmission of Materials
2.	ASTM E 154	Standard Test Methods for Water Vapor Retarders Used in Contact with Earth Under Concrete Slabs
3.	ASTM E 1643	Standard Practice for Selection, Design, Installation and Inspection of Water Vapor Retarders Used in Contact with Earth or Granular Fill Under Concrete Slabs
4.	ASTM E 1745	Standard Specification for Plastic Water Vapor Retarders Used in Contact with Soil or Granular Fill Under Concrete Slabs

B. American Concrete Institute (ACI), latest version.

1. ACI 302.2R, Guide for Concrete Slabs that Receive Moisture-Sensitive Flooring Materials.

1.4 SUBMITTALS

A. Quality Control / Assurance

1. Comply with Section 01 33 00 – Submittal Procedures.

2. Independent laboratory test results showing compliance with ASTM & ACI Standards.

3. Manufacturer’s samples, literature

4. Manufacturer’s installation instructions for placement, seaming and pipe boot installation

B. Delivery, Storage, and Handling

1. Deliver materials to site in manufacturer's original, unopened containers and packaging, with labels clearly identifying product name and manufacturer.

2. Store materials in a clean dry area in accordance with manufacturer's instructions.

3. Stack membrane on smooth ground or wood platform to eliminate warping.

4. Protect materials during handling and application to prevent damage or contamination.

5. Ensure membrane is stamped with manufacturer’s name, product name and membrane thickness at intervals of no more than 85” (220 cm).

C. Environmental requirements

1. Product not intended for uses subject to abuse or permanent exposure to the elements.

2. Do not apply on frozen ground.

PART 2 – PRODUCTS

2.1 MATERIALS

A. Vapor Retarder (Performance-Based Specifications)

1. Vapor Retarder must have the following qualities at minimum and meet floor finish manufacturer’s warranty requirements.

a. Water Vapor Retarder ASTM E1745: Meets or exceeds Class A

b. Maximum Permeance ASTM E96: 0.01 Perms or as required to meet Flooring Manufacturer’s Warranties.

c. Tensile Strength ASTM E154, Section 9: not less than 45 LBS. Force/Inch

d. Puncture Resistance ASTM D1709, Method B.

e. Thickness of Retarder (plastic) ACI 302.1R-96: Not less than 15 mils

f. Material: Virgin Polyethylene or Polyolefin

2. Vapor Retarder Products, may be by one of the following manufacturers or an approved equal, as long as the requirements above are met.

a. Epro, http://eproserv.com

b. Fortifiber, http://www.fortifiber.com

c. Stego Industries, http://www.stegoindustries.com

d. W.R. Meadows, http://www.wrmeadows.com

e. Raven Industries, http://www.vaporblock.com

f. Reef Industries, http://www.reefindustries.com

2.2 ACCESSORIES

A. Seam Tape

1. Tape must have the following qualities:

a. Water Vapor Transmission Rate ASTM E 96 0.3 perms or lower

B. Vapor Proofing Mastic

1. Mastic must have the following qualities:

a. Water Vapor Transmission Rate ASTM E 96 0.3 perms or lower

C. Pipe Boots

1. Construct pipe boots from vapor Retarder material, pressure sensitive tape and/or mastic per manufacturer's instructions.

PART 3 – EXECUTION

3.1 EXAMINATION

A. Examine surfaces to receive membrane. Ensure compaction requirements have been completed and geotechnical firm has confirmed compaction requirements have been met. Notify Architect if surfaces are not acceptable. Do not begin surface preparation or application until unacceptable conditions have been corrected.

3.2 SURFACE PREPARATION

A. Prepare surfaces in accordance with manufacturers instructions.

3.3 INSTALLATION

A. Install Vapor Retarder:

1. Installation shall be in accordance with manufacturer's instructions and ASTM E 1643.

a. Unroll Vapor Retarder with the longest dimension parallel with the direction of the pour.

b. Lap Vapor Retarder over footings and seal to foundation walls.

c. Overlap joints 6 inches and seal with manufacturer's tape.

d. Seal all penetrations (including pipes) per manufacturer's instructions.

e. No penetration of the Vapor Retarder is allowed except for reinforcing steel and permanent utilities.

f. Repair damaged areas by cutting patches of Vapor Retarder, overlapping damaged area 6 inches and taping all four sides with tape.

END OF SECTION

Refer to IECC for Climate Zones.

SECTION 072726

FLUID-APPLIED AIR AND WATER BARRIERS

PART 1 - GENERAL

1.1 SUMMARY

A. Section Includes: Fluid applied air and water barriers located within exterior wall assemblies; and supplementary items necessary for installation.

1. Fluid applied air and water barrier - vapor permeable.

B. Related Sections:

1. Refer to Division 6 Section Exterior Gypsum Sheathing for wall sheathing and sheathing joint-and-penetration treatments. Joint treatment components shall be compatible with air and water barrier assembly.
2. Division 07 Section "EIFS" for air and water barrier that is a part of the EIFS wall assembly. Products specified in this "Air and Water Barrier" Section are not intended to be used with the EIFS wall assembly.

1.2 DEFINITIONS

A. Air and Water Barrier Material: A primary element that provides a continuous barrier to the movement of air.

B. Air and Water Barrier Accessory: A transitional component of the air barrier that provides continuity.

C. Air and Water Barrier Assembly: The collection of air and water barrier materials and accessory materials applied to an opaque wall, including joints and junctions to abutting construction, to control air movement through the wall.

D. Air-Barrier System: The combination of air-barrier assemblies installed to provide a continuous barrier to the movement of air through building enclosures. This term applies to the whole building.

1.3 ACTION SUBMITTALS

A. Product Data: Manufacturer's technical literature for each product and system indicated.

1. Include manufacturer's written instructions for evaluating, preparing, and treating each substrate; technical data; dry film thickness; and tested physical and performance properties of products.
2. Include data on air and water-vapor permanence based on testing according to referenced standards.
3. Include VOC content of each material, and applicable legal limit in the jurisdiction of the project.

B. Samples: Samples for each of following:

1. Air and Water Barrier Membrane: Minimum 8-1/2 in by 11 in (212 mm) by (275 mm).
2. Accessory Materials: Sample of each item.

C. Shop Drawings: For air and water barrier assemblies.

1. Show locations and extent of air and water barrier assemblies and details of typical and project specific conditions.

    a. Include recommended values for field adhesion test on each substrate.

2. Include details for substrate joints and cracks, counterflashing strips, penetrations, inside and outside corners, terminations, and tie-ins with adjoining construction.
3. Include details of interfaces with other materials that form part of air barrier.

D. Shop Drawings of Mock-Up: Submit shop drawings of proposed mock-ups showing plans, elevations, large-scale details, and connections to the test apparatus.

1.4 INFORMATIONAL SUBMITTALS

A. Manufacturer's Project Acceptance Document: Certification by the manufacturer that its products and systems are approved, acceptable, suitable for use in specific locations, for specific details, and for applications indicated, specified, or required, and that a warranty will be issued.

1. Product Certificates: From air-barrier manufacturer, certifying compatibility of air barriers and accessory materials with Project materials that connect to or that come in contact with the barrier.

B. Field Quality Control Reports: Written report of testing and inspection required by "Field Quality Control".

C. Warranty:

1. Provide manufacturer's written warranty covering materials and installation (labor) stating obligations, remedies, limitations and exclusions.

1.5 QUALITY ASSURANCE

A. Installer Qualifications:

1. Experience: Installer's personnel with not less than 5 years of experience in the successful performance of Work similar to scope of this Project.
2. Supervision: Installer shall maintain a competent supervisor at Project while the Work is in progress, and who has not less than 5 years of experience installing products and systems similar to scope of this Project.
3. Manufacturer Acceptance: Installer shall be certified, approved, licensed, or acceptable to manufacturer to install products.

B. Mock-ups: Prior to fabrication and installation, build mock-up for each form of construction and finish required to verify selections made under sample Submittals and to demonstrate aesthetic effects and qualities of materials and execution. Build mock-up using materials indicated for the completed Work.

1. Build mock-up in the location and of the size indicated or, if not indicated, as directed by Architect. Contractor shall provide structural support framework.

    a. Build integrated mockups of exterior wall assembly, incorporating backup wall construction, external cladding, glazed aluminum framing, door frame and sill, insulation, ties and other penetrations, and flashing to demonstrate surface preparation, crack and joint treatment, application of air and water barriers, and sealing of gaps, terminations, and penetrations of air and water barrier assembly.
    b. If indicated, coordinate construction of mockups to permit inspection by Owner's testing agency of air and water barrier before external insulation and cladding are installed.
    c. Include junction with roofing membrane, building corners and, foundations.

2. Notify Architect seven days in advance of the dates and times when mock-up will be installed.
3. Obtain Architect's acceptance of mock-ups before starting fabrication or installation.
4. Acceptance of mock-ups does not constitute acceptance of deviations from the Contract Documents contained in mock-ups unless such deviations are specifically noted by Contractor and accepted by Architect in writing.
5. Demolish and remove mock-ups when directed by Architect unless accepted to become part of the completed Work.

1.6 PRECONSTRUCTION TESTING

A. Preconstruction Testing Service: Owner may engage a qualified testing agency to perform preconstruction testing on field mockups

B. Mockup Testing: Air-barrier assemblies shall comply with performance requirements indicated, as evidenced by reports based on mockup testing by a qualified testing agency

1. Air Leakage Volume Testing - Assembly: Maximum 0.04 cfm/sq. ft. of surface area at 1.57 lbf/sq. ft. (0.2 L/s x sq. m of surface area at 75 Pa), when tested according to ASTM E 783 or ASTM E 2357.
2. Adhesion Testing: Minimum 30 lbf/sq. in. (207 kPa) when tested according to ASTM D 4541 for adhesion to concrete.

1.7 PRE-INSTALLATION CONFERENCE

A. Pre-Installation Conference: Before Work begins, conduct conference at Project site.

1. Participants:

a. Architect.
b. Contractor, including superintendent.
c. Installer, including project manager and supervisor.
d. Manufacturer's qualified technical representative.
e. Installers of other construction interfaced with Work.

2. Minimum Agenda: Installer shall demonstrate understanding of the Work required by describing detailed procedures for preparing, installing, and cleaning the Work. Demonstration shall include, but not be limited to, following topics:

a. Tour representative areas of Work, inspect and discuss condition of substrate, and other preparatory work performed by other trades.
b. Review Contract Document requirements.
c. Review approved submittals.
d. Review inspection and testing requirements.
e. Review environmental conditions and procedures for coping with unfavorable conditions.
f. Resolve deviations or differences between Contract Documents and the manufacturer's specifications.

3. Record discussions, including decisions and agreements, and prepare report.

1.8 DELIVERY, STORAGE, AND HANDLING

A. Deliver materials in manufacturers original, unopened, undamaged containers with identification labels intact.

B. Store materials as recommended by manufacturer.

1.9 PROJECT CONDITIONS

A. Environmental Limitations: Apply air and water barrier within the range of ambient and substrate temperatures recommended by air and water barrier manufacturer.

1. Protect substrates from environmental conditions that affect air and water barrier performance.
2. Do not apply air and water barrier to a damp or wet substrate or during snow, rain, fog, or mist.

1.10 COORDINATION

A. Coordinate installation of products and systems with interfacing and adjoining construction to provide a successful installation without failure.

1.11 WARRANTY

A. Manufacturer's Warranty: Furnish manufacturer's written material and labor warranty signed by an authorized representative using manufacturer's standard form agreeing to furnish materials and labor required to repair or replace work which exhibits material defects caused by manufacture or design of product. "Defects" are defined to include but not limited to deterioration or failure to perform as required.

1. Warranty Period: Manufacturer shall warrant the products to be free from material and labor Defects for a period of 10 years from date of Substantial Completion.

B. Installer's Warranty: Furnish installer's written workmanship warranty signed by an authorized representative using installer's standard form agreeing to provide labor required to repair or replace work which exhibits workmanship defects. "Defects" is defined to include but not limited to deterioration or failure to perform as required.

1. Warranty Period: Installer shall warrant the installation to be free from workmanship Defects for a period of 2 years from date of Substantial Completion.

PART 2 - PRODUCTS

2.1 MANUFACTURERS AND PRODUCTS

A. Acceptable Manufacturers and Products: Subject to compliance with requirements of Contract Documents as judged by the Architect, provide product by one of manufacturers listed. If not listed, submit as substitution according to Conditions of the Contract and Division 01 Section "Substitution Procedures".

2.2 MATERIALS, GENERAL

A. Source Limitations: Obtain primary air and water barrier materials and air and water barrier accessories from single source from single manufacturer.

2.3 PERFORMANCE REQUIREMENTS

A. General: Air and water barrier assembly and seals with adjacent construction shall be capable of performing as a continuous air barrier and as a liquid-water drainage plane flashed to discharge to the exterior. Air and water barrier assemblies shall be capable of accommodating substrate movement and of sealing substrate expansion and control joints, construction material changes, penetrations, tie-ins to embedded flashing, tie-ins to installed waterproofing, and transitions at perimeter conditions without deterioration and air leakage exceeding specified limits.

1. Assembly shall perform as a drainage plane flashed to discharge condensation or water penetration to the exterior.
2. Assembly shall accommodate movements of building materials by providing expansion and control joints as required, with accessory air and water seal materials at such locations, changes in substrate and perimeter conditions.
3. Assembly shall be capable of withstanding positive and negative combined design wind, fan and stack pressures on the envelope without damage or displacement and shall transfer the load to the structure.
4. Assembly shall not displace adjacent materials under full load.
5. Assembly shall be joined in an airtight and flexible manner to the air and water barrier material of adjacent assemblies, allowing for the relative movement of assemblies due to thermal and moisture variations and creep, and anticipated seismic movement.

B. Connections to Adjacent Materials: Provide connections to prevent air leakage and water migration at the following locations:

1. Foundation and walls, including penetrations, ties and anchors
2. Walls, windows, curtain walls, storefronts, louvers or doors.
3. Different wall assemblies and fixed openings within those assemblies.
4. Wall and roof connections.
5. Floors over unconditioned space.

6. Walls, floor and roof across construction, control and expansion joints.
7. Walls, floors and roof to utility, pipe and duct penetrations.
8. Seismic and expansion joints.
9. Other leakage pathways in the building envelope.

C. Air-Barrier Air Leakage - Assembly: Maximum 0.04 cfm/sq. ft. of surface area at 1.57 lbf/sq. ft. (0.2 L/s x sq. m of surface area at 75 Pa), when tested according to ASTM E 2357.

2.4 FLUID APPLIED MEMBRANE AIR AND WATER BARRIER –Ó VAPOR PERMEABLE

A. Vapor-Permeable Air and Water Barrier: Liquid membrane with an installed dry film thickness according to manufacturer's written instructions, over smooth, void-free substrates.

1. Silicone Type:

a. Dow Corning; DefendAir 200 Silicone Liquid Applied Air and Water Barrier System.

1) Required Film Thickness: 30-32 mils wet film thickness, 15 mils required dry film thickness.

b. Momentive Performance Materials, Inc. / GE Silicones; Elemax 2600 Air and Water Barrier System.

1) Required Film Thickness: 19 mils wet film thickness, 17 mils required dry film thickness.

2. Synthetic Acrylic Polymer Type:

a. Tremco Commercial Sealants and Waterproofing; EXOAIR 230 Permeable Air and Water Barrier Membrane System.

1) Required Film Thickness: 48 mils wet film thickness, 25 mils required dry film thickness

3. Physical and Performance Properties:

a. Air Permeance - Materials: Maximum 0.004 cfm/sq. ft. of surface area at 1.57-lbf/sq. ft. (0.02 L/s x sq. m of surface area at 75-Pa) pressure difference; ASTM E 2178.
b. Vapor Permeance: 10 perms (580 ng/Pa x s x sq. m) minimum; ASTM E 96/E 96M, Water Method.
c. Ultimate Elongation: Minimum 500 percent; ASTM D 412.
d. Adhesion to Substrate: Minimum 30 lbf/sq. in. (207 kPa) when tested according to ASTM D 4541 for adhesion to concrete.

e. Fire Propagation Characteristics: Passes NFPA 285 testing as part of an approved assembly.

2.5 ACCESSORY MATERIALS

A. General: Provide compatible accessory materials recommended by air and water barrier manufacturer to produce a complete air and water barrier assembly.

1. Provide primers, transition strips, termination strips, joint reinforcing fabric and strips, joint sealants, counterflashing strips, flashing sheets and metal termination bars, termination mastic, substrate patching materials, adhesives, tapes, foam sealants, lap sealants, and other accessory materials that are recommended in writing by air and water barrier manufacturer to produce a complete air and water barrier assembly and that are compatible with primary air and water barrier material and adjacent construction to which they may seal.

B. Primer: Liquid primer recommended for substrate by air-barrier material manufacturer

C. Stainless-Steel Sheet: ASTM A240/A240M, Type 304, 0.0250 inch (0.64 mm) thick, and Series 300 stainless-steel fasteners.

D. Preformed Silicone Extrusion: Manufacturer's standard system consisting of cured low-modulus silicone extrusion, sized to fit opening widths, with a single-component, neutral-curing, Class 100/50 (low-modulus) silicone sealant for bonding extrusions to substrates.

E. Barrier Sealing Tape: Sheet material laminated to adhesive coated butyl or other barrier sealing tape approved by air and water barrier manufacturer for sealing fastener and anchor penetrations.

F. Termination Bars:

1. Bar: 1/8 in (3 mm) thick by 1 in (25 mm) wide continuous stainless-steel bar with 1/4 in (6 mm) diameter holes spaced at 8 in (200 mm) on centers.
2. Mechanical Fasteners: Corrosion resistant, self-tapping drill point screws with hex washer head with bonded EPDM, shank size and length as required to penetrate steel stud flange and strap back-up by not less than 3 exposed threads.

G. One-Piece Electrical Box:

1. Description: Rigid reinforced polyethylene electrical box designed to prevent leaks at air and water barrier, with fixed or adjustable flange to suit installation conditions, with clear hinged weatherproof in-use cover.
2. Manufacturer and Product: Arlington Industries, Inc.; In Box.

H. Sheathing Joint Treatments: Refer to Division 6 Section "Exterior Gypsum Sheathing". All components to be compatible with air and water barrier system.

I. Sealant: Silicone construction sealant as recommended by air and water barrier manufacturer for each installation condition.

PART 3 - EXECUTION

3.1 EXAMINATION

A. Acceptance of Surfaces and Conditions: Examine substrates to receive products and systems and associated work for compliance with requirements and other conditions affecting performance. Proceed only when unsatisfactory conditions have been corrected in a manner complying with Contract Documents. Starting work within a particular area will be construed as acceptance of surface conditions.

1. Verify that substrates are sound and free of oil, grease, dirt, excess mortar, or other contaminants.
2. Verify that substrates have cured and aged for minimum time period recommended by air and water barrier manufacturer.
3. Verify that substrates are visibly dry and free of moisture. Test for capillary moisture by plastic sheet method according to ASTM D 4263.
4. Verify that masonry joints are flush and filled completely with mortar.
5. Verify sealants and joint treatments used in sheathing are compatible with membrane.

3.2 INSTALLATION, GENERAL

A. Installation Quality Standards: In addition to standards listed elsewhere, perform Work according to following, unless otherwise specified:

1. Respective Manufacturer's written installation instructions.
2. Accepted submittals.
3. Contract Documents.

3.3 PREPARATION

A. General: Comply with manufacturer's instructions, recommendations, and specifications for cleaning and surface preparation. Surfaces shall have no defects, contaminants, or errors which would result in poor or potentially defective installation or would cause latent defects in Work.

B. Clean, prepare, and treat substrate according to manufacturer's written instructions. Provide clean, dust-free, and dry substrate for air and water barrier application.

C. Mask off adjoining surfaces not covered by air and water barrier to prevent spillage and overspray affecting other construction.

D. Remove grease, oil, bitumen, form-release agents, paints, curing compounds, and other penetrating contaminants or film-forming coatings from concrete.

E. Remove fins, ridges, mortar, and other projections and fill honeycomb, aggregate pockets, holes, and other voids in concrete with substrate-patching membrane.

F. Remove excess mortar from masonry ties, shelf angles, and other obstructions.

G. At changes in substrate plane, apply sealant or termination mastic beads at sharp corners and edges to form a smooth transition from one plane to another.

H. Cover gaps in substrate plane and form a smooth transition from one substrate plane to another to provide continuous support for air and water barrier.

I. Bridge joints and discontinuous wall-to-wall, deck-to-wall, and deck-to-deck joints with air-barrier accessory material that accommodates joint movement according to manufacturer's written instructions and details.

J. Masonry joints shall be struck flush and cracks greater than crack bridging ability shall be filled (routed and filled where necessary) prior to application of membrane to the surface.

K. Sheathing joints shall be treated in accordance with manufacturer installation details.

1. Treat and seal all screw penetrations. Allow treatment to cure before installation of air and water barrier membrane.

3.4 ACCESSORIES INSTALLATION

A. Install accessory materials according to air and water barrier manufacturer's written instructions and details to form a seal with adjacent construction and ensure continuity of air and water barrier.

1. Coordinate the installation of air and water barrier with installation of roofing membrane and base flashing to ensure continuity of air and water barrier with roofing membrane.
2. Install transition strip on roofing membrane or base flashing so that a minimum of 3 inches (75 mm) of coverage is achieved over each substrate.
3. Unless manufacturer recommends in writing against priming, apply primer to substrates at required rate and allow it to dry.
4. Apply primer to substrates at required rate and allow it to dry. Limit priming to areas that will be covered by air and water barrier material on same day. Re-prime areas exposed for more than 24 hours.

B. Connect and seal exterior wall air and water barrier material continuously to roofing-membrane air and water barrier, concrete below-grade structures, floor-to-floor construction, exterior glazing and window systems, glazed curtain-wall systems, storefront systems, exterior louvers, exterior door framing, and other construction used in exterior wall openings, using accessory materials.

C. One-Piece Electrical Box: Install in accordance with manufacturer's recommendations. Cover shall project from face of wall surface enough to allow hinged cover to fully open for access.

D. At end of each working day, seal top edge of strips and transition strips to substrate with termination mastic.

E. Apply joint sealants forming part of air and water barrier assembly within manufacturer's recommended application temperature ranges. Consult manufacturer when sealant cannot be applied within these temperature ranges.

F. Wall Openings: Prime concealed, perimeter frame surfaces of windows, curtain walls, storefronts, and doors. Apply transition strip or preformed silicone extrusion so that a minimum of 3 inches (75 mm) of coverage is achieved over each substrate. Maintain 3 inches (75 mm) of full contact over firm bearing to perimeter frames, with not less than 1 inch (25 mm) of full contact.

1. Transition Strip: Roll firmly to enhance adhesion.
2. Preformed Silicone Extrusion: Set in full bed of silicone sealant applied to walls, frame, and air and water barrier material. Roll firmly to enhance adhesion.

G. Fill gaps in perimeter frame surfaces of windows, curtain walls, storefronts, and doors, and miscellaneous penetrations of air and water barrier material with foam sealant.

H. Seal strips and transition strips around masonry reinforcing or ties and penetrations with termination mastic

I. Seal top of through-wall flashings to air barrier with an additional 6-inch- (150-mm-) wide, transition strip.

J. Seal exposed edges of strips at seams, cuts, penetrations, and terminations not concealed by metal counter-flashings or ending in reglets with termination mastic

K. Repair punctures, voids, and deficient lapped seams in strips and transition strips. Slit and flatten fish mouths and blisters. Patch with transition strips extending 6 inches (150 mm) beyond repaired areas in strip direction

L. Anchors and Fasteners: Install a strip of barrier flashing tape behind through-wall attachments, including masonry veneer anchors, that penetrate air and water barrier.

3.5 AIR AND WATER BARRIER MEMBRANE INSTALLATION

A. Apply air and water barrier material to form a seal with strips and transition strips and to achieve a continuous air and water barrier according to air and water barrier manufacturer's written instructions and details. Apply air and water barrier material within manufacturer's recommended application temperature ranges.

1. Unless manufacturer recommends in writing against priming, apply primer to substrates at required rate and allow it to dry.
2. Limit priming to areas that will be covered by air and water barrier material on same day. Re-prime areas exposed for more than 24 hours.
3. Where multiple prime coats are needed to achieve required bond, allow adequate drying time between coats.

B. Apply continuous unbroken air-barrier material to substrates according to the following thickness. Apply an increased thickness of air-barrier material in full contact around protrusions such as masonry ties

1. Total dry film thickness as recommended in writing by manufacturer to comply with performance requirements, applied in one or more equal coats. Apply additional material as needed to achieve void- and pinhole-free surface, but do not exceed thickness on which required vapor permeability is based

C. Transition and Detailing Treatment: Install appropriate materials to treat sheathing joints, expansion joints, drift joints, rough openings, transitions, terminations, penetrations and similar surface irregularities. Transitions and detailing can be performed before or after air and water barrier membrane application. Ensure installation is performed in accordance with manufacturers written installation instructions and details.

D. Do not cover air and water barrier until it has been tested and inspected by Owner's testing agency.

E. Correct deficiencies in or remove air and water barrier that does not comply with requirements; repair substrates and reapply air and water barrier components.

3.6 FIELD QUALITY CONTROL

A. Manufacturer's Field Service: Manufacturer's qualified technical representative shall periodically inspect Work to ensure installation is proceeding in accordance with manufacturer's designs, recommendations, instructions, and warranty requirements. Representative shall submit written reports of each visit indicating observations, findings, and conclusions of inspection.

1. Manufacturer's Technical Representative Qualifications: Direct employee of technical services department of manufacturer with experience in providing recommendations, observations, evaluations, and problem diagnostics.

B. Testing Agency: The Owner may employ and pay a qualified independent testing agency to perform field quality control. Materials and installation failing to meet specified requirements shall be replaced at Contractor's expense. Retesting of materials and installations failing to meet specified requirements shall be done at Contractor's expense.

C. Inspections: Air and water barrier materials, accessories, and installation are subject to inspection for compliance with requirements. Inspections may include the following:

1. Continuity of air and water barrier system has been achieved throughout the building envelope with no gaps or holes.
2. Air and water barrier dry film thickness.
3. Continuous structural support of air and water barrier system has been provided.
4. Masonry and concrete surfaces are smooth, clean, and free of cavities, protrusions, and mortar droppings.
5. Site conditions for application temperature and dryness of substrates have been maintained.
6. Maximum exposure time of materials to UV deterioration has not been exceeded.
7. Surfaces have been primed, if applicable.
8. Laps in strips and transition strips have complied with minimum requirements and have been shingled in the correct direction (or mastic has been applied on exposed edges), with no fish mouths.
9. Liquid flashing has been applied on cut edges.
10. Strips and transition strips have been firmly adhered to substrate.
11. Compatible materials have been used.
12. Transitions at changes in direction and structural support at gaps have been provided.
13. Connections between assemblies (air and water barrier and sealants) have complied with requirements for cleanliness, surface preparation and priming, structural support, integrity, and continuity of seal.
14. All penetrations have been sealed.

D. Tests: As determined by Owner's testing agency from among the following tests:

1. Air Leakage Volume Testing - Assembly: Maximum 0.04 cfm/sq. ft. of surface area at 1.57 lbf/sq. ft. (0.2 L/s x sq. m of surface area at 75 Pa), when tested according to ASTM E 783 or ASTM E 2357.
2. Air Leakage Volume Testing - Building: Maximum 0.4 cfm/sq. ft. of surface area at 1.57 lbf/sq. ft. (2.0 L/s x sq. m of surface area at 75 Pa)., when tested according to ASTM E 779.
3. Adhesion Testing: Minimum 30 lbf/sq. in. (207 kPa) when tested according to ASTM D 4541 for adhesion to concrete.
4. Refer to Division 01 Section "Field Test for Water Leakage".

E. Air and water barriers will be considered defective if they do not pass tests and inspections.

1. Apply additional air and water barrier material, according to manufacturer's written instructions, where inspection results indicate insufficient thickness.
2. Remove and replace deficient air and water barrier components for retesting as specified above.

F. Repair damage to air and water barriers caused by testing; follow manufacturer's written instructions.

G. Prepare test and inspection reports.

3.7 CLEANING AND PROTECTION

A. Protect air and water barrier system from damage during application and remainder of construction period, according to manufacturer's written instructions.

1. Protect air and water barrier from exposure to UV light and harmful weather exposure as required by manufacturer.
2. Protect air and water barrier from contact with incompatible materials and sealants not approved by air and water barrier manufacturer.

B. Clean spills, stains, and soiling from construction that would be exposed in the completed Work, using cleaning agents and procedures recommended by manufacturer of affected construction.

C. Remove masking materials after installation.

END OF SECTION

SECTION 07 4213

FORMED METAL WALL PANELS

PART 1 - GENERAL

1.1 SUMMARY

A. Section Includes: Factory-formed metal wall panels and supplementary items necessary for installation.

1.2 DEFINITIONS

A. Metal Wall Panel Assembly: Metal wall panels, attachment system components, miscellaneous metal framing, and supplementary items necessary for a complete weathertight wall system.

1.3 ACTION SUBMITTALS

A. Product Data: Manufacturer's technical literature for each product and system indicated.

1. Include manufacturer's specifications for materials, finishes, construction details, installation instructions, and recommendations for maintenance.

B. Shop Drawings: Show details of fabrication and installation, including plans, elevations, sections, details of components and attachments to other work. Distinguish between shop and field-assembled work. Include the following:

1. Show fabrication and installation layouts of metal wall panels.
2. Show details and locations of edge conditions, side-seam and end-lap joints, panel profiles, corners, anchorages, trim, flashings, closures, and terminations.
3. Show details for securing metal wall panel assembly, including layout of fasteners and other attachments.
4. Show details of wall panel penetrations.
5. Show details of connections to adjoining work.
6. Indicate where and how the system deviates from Contract Documents.

C. Samples for Verification Purposes: For each type of exposed finish required, prepared on samples of size indicated below.

1. Metal Wall Panels: 12 in (300 mm) long by actual panel width. Include fasteners, closures, and other metal wall panel accessories.
2. Trim and Closures: 12 in (300 mm) long. Include fasteners and other exposed accessories.
3. Accessories: 12 in (300 mm) long samples for each type of accessory.

1.4 INFORMATIONAL SUBMITTALS

A. Delegated Engineering Calculations: Informational submittal for products indicated to comply with design loads, include structural analysis data signed and sealed by the qualified professional engineer responsible for their preparation; test reports are not acceptable substitute for calculations.

B. Product Test Reports: Written reports based on evaluation of comprehensive tests performed by qualified testing agency indicating that each product complies with requirements.

1. Product Approvals: Submit Florida Product Approval or Product Control Notice of Acceptance (NOA) issued by Miami-Dade County Building Code Compliance Office (BCCO) or other product approval acceptable to authorities having jurisdiction for systems used at exterior of building.

C. Field Quality Control Reports: Written report of testing and inspection required by "Field Quality Control".

D. Manufacturer's Project Acceptance Document: Certification by the manufacturer that its products and systems are approved, acceptable, suitable for use in specific locations, for specific details, and for applications indicated, specified, or required, and that a warranty will be issued.

E. Qualification Data:

1. For firms and persons specified in "Quality Assurance" to demonstrate their capabilities and experience. Include list of completed projects.

F. Warranty: Sample of warranty.

1. Provide manufacturer's written warranty covering materials and installation (labor) stating obligations, remedies, limitations and exclusions.

1.5 CLOSEOUT SUBMITTALS

A. Maintenance Data: To include in maintenance manuals.

1.6 QUALITY ASSURANCE

A. Installer Qualifications:

1. Experience: Installer's personnel with not less than 5 years of experience in the successful performance of Work similar to scope of this Project.
2. Supervision: Installer shall maintain a competent supervisor at Project while the Work is in progress, and who has not less than 5 years of experience installing products and systems similar to scope of this Project.
3. Manufacturer Acceptance: Installer shall be certified, approved, licensed, or acceptable to manufacturer to install products.

B. Mock-ups: Prior to fabrication and installation, build mock-up for each form of construction and finish required to verify selections made under sample Submittals and to demonstrate aesthetic effects and qualities of materials and execution. Build mock-up using materials indicated for the completed Work.

1. Build mock-up in the location and of the size indicated or, if not indicated, as directed by Architect. Contractor shall provide structural support framework.

    a. Show typical components, attachments to building structure, and requirements of installation.

2. Notify Architect seven days in advance of the dates and times when mock-up will be installed.
3. Obtain Architect's acceptance of mock-ups before starting fabrication or installation.
4. Acceptance of mock-ups does not constitute acceptance of deviations from the Contract Documents contained in mock-ups unless such deviations are specifically noted by Contractor and accepted by Architect in writing.
5. Demolish and remove mock-ups when directed by Architect unless accepted to become part of the completed Work.

1.7 PRE-INSTALLATION CONFERENCE

A. Pre-Installation Conference: Before Work begins, conduct conference at Project site.

1. Participants:

    a. Architect.
    b. Contractor, including superintendent.
    c. Installer, including project manager and supervisor.
    d. If requested, Manufacturer's qualified technical representative.
    e. Installers of other construction interfaced with Work.

2. Minimum Agenda: Installer shall demonstrate understanding of the Work required by describing detailed procedures for preparing, installing, and cleaning the Work. Demonstration shall include, but not be limited to, following topics:

    a. Tour representative areas of Work, inspect and discuss condition of substrate, and other preparatory work performed by other trades.
    b. Review Contract Document requirements.
    c. Review approved submittals.
    d. Review inspection and testing requirements.
    e. Review environmental conditions and procedures for coping with unfavorable conditions.
    f. Resolve deviations or differences between Contract Documents and the manufacturer's specifications.

3. Record discussions, including decisions and agreements, and prepare report.

1.8 DELIVERY, STORAGE, AND HANDLING

A. Deliver components, sheets, metal wall panels, and other manufactured items so as not to be damaged or deformed. Package metal wall panels for protection during transportation and handling.

B. Unload, store, and erect metal wall panels in a manner to prevent bending, warping, twisting, and surface damage.

C. Stack metal wall panels horizontally on platforms or pallets, covered with suitable weathertight and ventilated covering. Store metal wall panels to ensure dryness, with positive slope for drainage of water. Do not store metal wall panels in contact with other materials that might cause staining, denting, or other surface damage.

D. Retain strippable protective covering on metal wall panel for period of metal wall panel installation.

1.9 PROJECT CONDITIONS

A. Weather Limitations: Proceed with installation only when existing and forecasted weather conditions permit assembly of metal wall panels to be performed according to manufacturer's written instructions and warranty requirements.

B. Field Measurements: Where products and systems are indicated to fit walls and other construction, verify dimensions by field measurements before fabrication.

1.10 COORDINATION

A. Coordinate installation of products and systems with interfacing and adjoining construction to provide a successful installation without failure.

1.11 WARRANTY

A. Manufacturer's Warranty: Furnish manufacturer's written material and labor warranty signed by an authorized representative using manufacturer's standard form agreeing to furnish materials and labor required to repair or replace work which exhibits material defects caused by manufacture or design and installation of product. "Defects" is defined to include but not limited to deterioration or failure to perform as required.

1. Failures include, but are not limited to, the following:

    a. Structural failures including, but not limited to, excessive deflection.
    b. Noise or vibration created by wind and thermal and structural movements.
    c. Deterioration of metals and other materials beyond normal weathering.
    d. Water penetration through fixed panels.

2. Warranty Period: Manufacturer shall warrant the products to be free from material and labor Defects for a period of 5 years from date of Substantial Completion

B. Installer's Warranty: Furnish installer's written workmanship warranty signed by an authorized representative using installer's standard form agreeing to provide labor required to repair or replace work which exhibits workmanship defects. ''Defects'' is defined to include but not limited to deterioration or failure to perform as required.

1. Warranty Period: Installer shall warrant the installation to be free from workmanship Defects for a period of 2 years from date of Substantial Completion.

C. Factory Applied Finish Warranty for High-Performance Fluoropolymer Finishes: Furnish manufacturer's written warranty signed by an authorized representative using manufacturer's standard form agreeing to repair finish or replace work which exhibits finish defects. "Defects" is defined to include but not limited to deterioration or failure of finish to perform as required.

1. Coverage includes, but is not limited to, the following:

a. Color fading more than 5 Hunter units when tested according to ASTM D 2244.
b. Chalking in excess of a No. 8 rating when tested according to ASTM D 4214.
c. Cracking, checking, peeling, or failure of paint to adhere to bare metal.

2. Warranty Period: Manufacturer shall warrant the installation to be free from finish defects for a period of 20 years from date of Substantial Completion.

PART 2 - PRODUCTS

2.1 MANUFACTURERS

A. Acceptable Manufacturers and Products: Subject to compliance with requirements of Contract Documents as judged by the Architect, provide product by one of manufacturers listed. If not listed, submit as substitution according to the Conditions of the Contract and Division 01 Section "Substitution Procedures".

1. Architectural Building Components.
2. Berridge Manufacturing Company.
3. CENTRIA Architectural Systems.
4. MBCI

B. Basis of Design (Product Standard): Contract Documents are based on products and systems specified to establish a standard of quality. Other manufacturers offering products having equivalent characteristics may be considered, provided deviations are minor and comply with requirements of Contract Documents as judged by the Architect.

2.2 MATERIALS, GENERAL

A. Single Source Responsibility: Furnish each type of product from single manufacturer. Provide secondary materials only as recommended by manufacturer of primary materials.

2.3 PERFORMANCE REQUIREMENTS

A. General Performance: Engineer products and systems to withstand loads within limits of allowable working stresses of the materials involved under conditions indicated and without permanent deformation or failure of materials.

B. Design Loads: Engineer to withstand design loads including, but not limited to, gravity, wind, seismic, and erection design loads and thermal movements established by authorities having jurisdiction, applicable local building codes and as indicated.

1. Structural Movement: Engineer to withstand movements of structure including, but not limited to, drift, twist, column shortening, long-term creep and deflection from uniformly distributed and concentrated live loads. Contractor shall obtain required design data and identify movements accommodated on submittal drawings.

C. Delegated Design: Design metal wall panel assembly, including comprehensive engineering analysis by a qualified professional engineer, using performance requirements and design criteria indicated.

D. Structural-Test Performance: Provide metal wall panel assemblies capable of withstanding the effects of gravity loads and the following loads and stresses within limits and under conditions indicated, based on testing according to ASTM E 1592 or ASTM E 330 as follows:

1. When tested at positive and negative wind-load design pressures, assemblies do not evidence deflection no greater than 1/240 of the span.
2. When tested at 150 percent of positive and negative wind-load design pressures, assemblies, including anchorage, do not evidence material failures, structural distress, and permanent deformation of main framing members exceeding 0.2 percent of the clear span.

E. Windborne-Debris-Impact-Resistance Performance: Comply with impact resistance testing requirements for Wind Zone.

F. Air Infiltration: Air leakage through assembly of not more than 0.06 cfm/sf (0.30 L/s/sm) of wall area when tested according to ASTM E 283 at a static-air-pressure difference of 1.57 lbf/sf (75 Pa).

G. Water Penetration under Static Pressure: No evidence of water penetration through fixed panels and framing areas when tested according to ASTM E 331 at a minimum static-air-pressure differential of 20 percent of positive wind-load design pressure not less than 6.24 lbf/sf (300 Pa).

H. Thermal Movements: Engineer products and systems to accommodate thermal movements of supporting elements resulting from the following maximum change (range) in ambient and surface temperatures without buckling, damaging stresses, damaging loads on fasteners, failure of operating units to function properly, and other detrimental effects.

1. Temperature Change (Range): 120 deg F (49 deg C), ambient; 180 deg F (82 deg C), material surfaces.

I. Dimensional Tolerances: Engineer products and systems to accommodate dimensional tolerances of framing members and adjacent construction.

2.4 METAL WALL PANEL MATERIALS

A. Metallic-Coated Steel Sheet: Restricted flatness steel sheet metallic coated by the hot-dip process and pre-painted by the coil-coating process to comply with ASTM A 755 / A 755M.

1. Provide one of the following:

    a. Zinc-Coated (Galvanized) Steel Sheet: ASTM A 653 / A 653M, G90 (Z275) coating designation; structural quality.
    b. Aluminum-Zinc Alloy-Coated Steel Sheet: ASTM A 792 / A 792M, Class AZ50 coating designation, Grade 40 (Class AZM150 coating designation, Grade 275); structural quality.

2. Surface: Smooth and flat.
3. Exposed Coil-Coated Finish: Fluoropolymer finish as specified elsewhere in this Section.
4. Concealed Finish: Apply pretreatment and manufacturer's standard white or light-colored acrylic or polyester backer finish, consisting of prime coat and wash coat with a minimum total dry film thickness of 0.5 mils (0.013 mm).

2.5 EXPOSED-FASTENER, LAP-SEAM METAL WALL PANELS

A. General: Provide factory-formed metal wall panels designed to be field assembled by lapping side edges of adjacent panels and mechanically attaching panels to supports using exposed fasteners in side laps. Include accessories required for weathertight installation.

B. Corrugated-Profile, Exposed-Fastener Metal Wall Panels: Formed with alternating curved ribs spaced at 2.67 in (68 mm) on center across width of panel.

1. Basis of Design: CENTRIA; Econolap
2. Material: Zinc-coated (galvanized) steel sheet or aluminum-zinc alloy-coated steel sheet, standard of manufacturer; 22 gage, 0.034 in (0.8 mm) nominal minimum thickness.
3. Panel Coverage: 34-2/3 in (880 mm).
4. Panel Height: 3/4 in (19 mm).

C. Box-Rib-Profile, Exposed-Fastener Metal Wall Panels: Formed with raised, box-shaped ribs, evenly spaced across panel width, and with rib/recess sides angled 60 degrees or more.

1. Basis of Design: CENTRIA; BR5-36
2. Material: Zinc-coated (galvanized) steel sheet or aluminum-zinc alloy-coated steel sheet, standard of manufacturer; 22 gage, 0.034 in (0.8 mm) nominal minimum thickness.
3. Panel Coverage: 36 in (914 mm).
4. Rib Spacing: 7.2 in (183 mm) on center.
5. Panel Height: 1-1/2 in (38 mm).

2.6 CONCEALED-FASTENER, LAP-SEAM METAL WALL PANELS

A. General: Provide factory-formed metal wall panels designed to be field assembled by lapping and interconnecting side edges of adjacent panels and mechanically attaching through panel to supports using concealed fasteners and factory-applied sealant in side laps. Include accessories required for weathertight installation.

B. Flush-Profile, Concealed-Fastener Metal Wall Panels: Formed with vertical panel edges and flat panel between panel edges; with flush joint between panels.

1. Basis of Design: CENTRIA; IW 10A
2. Material: Zinc-coated (galvanized) steel sheet or aluminum-zinc alloy-coated steel sheet, standard of manufacturer; 22 gage, 0.034 in (0.8 mm) nominal minimum thickness.

3. Panel Coverage: 12 in (300 mm).
4. Panel Height: 1-1/2 in (38 mm).

C. Flush-Profile, Concealed-Fastener Metal Wall Panels: Formed with vertical panel edges and intermediate stiffening ribs symmetrically spaced between panel edges; with flush joint between panels.

1. Basis of Design: CENTRIA; IW 14A
2. Material: Zinc-coated (galvanized) steel sheet or aluminum-zinc alloy-coated steel sheet, standard of manufacturer; 22 gage, 0.034 in (0.8 mm) nominal minimum thickness.
3. Panel Coverage: 12 in (300 mm).
4. Panel Height: 1-1/2 in (38 mm).

D. Reveal-Joint, Concealed-Fastener Metal Wall Panels: Formed with vertical panel edges and flat pan between panel edges; with narrow reveal joint between panels.

1. Basis of Design: CENTRIA; IW-40A
2. Material: Zinc-coated (galvanized) steel sheet or aluminum-zinc alloy-coated steel sheet, standard of manufacturer; 22 gage, 0.034 in (0.8 mm) nominal minimum thickness.
3. Panel Coverage: 11 in (279 mm).
4. Reveal Joint: 1 in (25 mm) wide.
5. Panel Height: 1-1/2 in (38 mm).

2.7 CONCEALED-FASTENER, METAL SOFFIT PANELS

A. General: Provide factory-formed metal soffit panels designed to be installed by lapping and interconnecting side edges of adjacent panels and mechanically attaching through panel to supports using concealed fasteners in side laps. Include accessories required for weathertight installation.

B. Flush-Profile, Concealed-Fastener Metal Soffit Panels: Formed with vertical panel edges and flat panel between panel edges; with flush joint between panels.

1. Basis of Design: CENTRIA; IW 10A
2. Material: Zinc-coated (galvanized) steel sheet or aluminum-zinc alloy-coated steel sheet, standard of manufacturer; 22 gage, 0.034 in (0.8 mm) nominal minimum thickness.
3. Panel Coverage: 12 in (300 mm).
4. Panel Height: 1-1/2 in (38 mm).

2.8 WALL PANEL ASSEMBLY ACCESSORIES

A. General: Provide components approved by metal wall panel manufacturer and as required for a complete assembly including trim, corner units, closures, clips, flashings, sealants, gaskets, fillers, closure strips, and similar items. Match material and finish of metal wall panels, unless otherwise indicated.

1. Closures: Provide closures fabricated of same metal as metal wall panels.
2. Closure Strips: Closed-cell, expanded, cellular, rubber or cross-linked, polyolefin-foam or closed-cell laminated polyethylene; minimum 1 in (25 mm) thick, flexible closure strips; cut or pre-molded to match metal wall panel profile. Provide closure strips where indicated or necessary to ensure weathertight construction.

3. Backing Plates: Provide metal backing plates at panel end splices, fabricated from material recommended by manufacturer.

B. Panel Sealants: Provide the following as recommended by metal wall panel assembly manufacturer for installation indicated.

1. Sealant Tape: Pressure-sensitive, 100 percent solids, gray polyisobutylene compound sealant tape with release-paper backing. Provide permanently elastic, non-sag, nontoxic, non-staining tape 1/2 in (12 mm) wide and 1/8 in (3 mm) thick.
2. Elastomeric Joint Sealant: ASTM C 920; elastomeric silicone polymer sealant; of type, grade, class, and use classifications required to seal exposed joints in metal wall panels and remain weathertight; and as recommended in writing by metal wall panel manufacturer.
3. Butyl-Rubber-Based, Solvent-Release Sealant: ASTM C 1311, single-component, solvent-release butyl rubber sealant; polyisobutylene plasticized; heavy bodied for concealed hooked-type expansion joints with limited movement.

C. Panel Fasteners: Self-tapping screws, bolts, nuts, self-locking rivets and bolts, end-welded studs, and other suitable fasteners designed to withstand design loads as appropriate for metal wall panel material. Provide exposed fasteners with heads matching color of metal wall panels by means of plastic caps or factory-applied coating. Provide EPDM, PVC, or neoprene sealing washers.

1. Fasteners for Zinc-Coated or Aluminum-Zinc Alloy-Coated Steel Sheet: Hot-dip galvanized steel according to ASTM A 153 / A 153M, ASTM F 2329, or Series 300 stainless steel.

D. Bituminous Coating: Cold-applied asphalt mastic, SSPC-Paint 12, or cold-applied asphalt emulsion complying with ASTM D 1187; compounded for 15 mils (0.4 mm) dry film thickness per coat. Provide inert-type noncorrosive compound free of asbestos fibers, sulfur components, and other deleterious impurities.

E. Self-Adhering, High-Temperature Rubberized Asphalt Flashing: Minimum 30 mils to 40 mils (0.76 mm to 1.00 mm) thick, consisting of slip-resisting polyethylene-film top surface laminated to layer of butyl or SBS-modified asphalt adhesive, with release-paper backing; cold applied. Provide primer when recommended by underlayment manufacturer.

1. Thermal Stability: ASTM D 1970; stable after testing at 240 deg F (116 deg C).
2. Low-Temperature Flexibility: ASTM D 1970; passes after testing at minus 20 deg F (-6.7 deg C).
3. Manufacturers and Products:

    a. Carlisle Coatings & Waterproofing; CCW WIP 300HT.
    b. Grace Construction Products, a unit of W. R. Grace & Co.; Ultra.
    c. Henry Company; Blueskin PE200 HT.
    d. Metal-Fab Manufacturing, LLC; MetShield.
    e. Owens Corning; WeatherLock Metal High Temperature Underlayment.

F. Barrier Flashing Tape: Air-barrier manufacturer's standard adhesive and pressure-sensitive adhesive tape. Refer to Division 07 Section "Air and Water Barriers".

G. Liquid Membrane: Air-barrier manufacturer's standard cold fluid-applied elastomeric liquid; trowel grade. Refer to Division 07 Section "Air and Water Barriers".

2.9 MISCELLANEOUS METAL FRAMING

A. Miscellaneous Metal Framing, General: ASTM C 645, cold-formed metallic-coated steel sheet, ASTM A 653 / A 653M, G90 (Z275) hot-dip galvanized or coating with equivalent corrosion resistance unless otherwise indicated.

B. Subgirts: Manufacturer's standard C- or Z-shaped sections, 0.053 in (16 gage) (1.3 mm) minimum thickness.

C. Zee Clips: 0.053 in (16 gage) (1.3 mm) minimum thickness.

D. Base or Sill Angles or Channels: 0.053 in (16 gage) (1.3 mm) minimum thickness.

E. Fasteners for Miscellaneous Metal Framing: Of type, material, size, corrosion resistance, holding power, and other properties required to fasten miscellaneous metal framing members to substrates.

2.10 FABRICATION

A. General: Fabricate and finish metal wall panels and accessories at the factory to greatest extent possible, by manufacturer's standard procedures and processes, as necessary to fulfill indicated performance requirements demonstrated by laboratory testing. Comply with indicated profiles and with dimensional and structural requirements.

B. Fabricate metal wall panels in a manner that eliminates condensation on interior side of panel and with joints between panels designed to form weathertight seals.

C. Provide panel profile, including major ribs and intermediate stiffening ribs, if any, for full length of panel.

D. Fabricate metal wall panel joints with factory-installed captive gaskets or separator strips that provide a tight seal and prevent metal-to-metal contact, and that will minimize noise from movements within panel assembly.

E. Sheet Metal Accessories: Fabricate flashing and trim to comply with recommendations in SMACNA's "Architectural Sheet Metal Manual" that apply to the design, dimensions, metal, and other characteristics of item indicated.

1. Form exposed sheet metal accessories that are without excessive oil canning, buckling, and tool marks and that are true to line and levels indicated, with exposed edges folded back to form hems.
2. Seams: Fabricate nonmoving seams in accessories with flat-lock seams. Tin edges to be seamed, form seams, and solder.
3. Sealed Joints: Form non-expansion but movable joints in metal to accommodate elastomeric sealant to comply with SMACNA standards.
4. Conceal fasteners and expansion provisions where possible. Exposed fasteners are not allowed on faces of accessories exposed to view.

5. Fabricate cleats and attachment devices from same material as accessory being anchored or from compatible, noncorrosive metal recommended by metal wall panel manufacturer.

    a. Size: As recommended by SMACNA's "Architectural Sheet Metal Manual" or metal wall panel manufacturer for application but not less than thickness of metal being secured.

2.11 FINISHES, GENERAL

A. Comply with NAAMM's "Metal Finishes Manual for Architectural and Metal Products" for recommendations for applying and designating finishes.

B. Protect mechanical finishes on exposed surfaces from damage by applying a strippable, temporary protective covering before shipping.

C. Appearance of Finished Work: Variations in appearance of abutting or adjacent pieces are acceptable if they are within one-half of the range of accepted Samples. Noticeable variations in the same piece are not acceptable. Variations in appearance of other components are acceptable if they are within the range of accepted Samples and are assembled or installed to minimize contrast.

2.12 STEEL FINISHES

A. High-Performance Organic Finish: Prepare, pretreat, and apply coating to exposed metal surfaces to comply with coating and resin manufacturers' written instructions. Provide dry film thickness, primers, color coats and clear coats required to comply with performance requirements and warranty periods indicated.

1. PVDF Fluoropolymer Finish: Fluoropolymer finish complying with AAMA 621 and containing not less than 70 percent PVDF resin by weight in color coat.
2. FEVE Fluoropolymer Finish: Fluoropolymer finish complying with AAMA 621 and containing 100 percent fluorinated ethylene vinyl ether (FEVE) resin in color coat.
3. Selections: As scheduled or as indicated on drawings.

PART 3 - EXECUTION

3.1 EXAMINATION

A. Acceptance of Surfaces and Conditions: Examine substrates to receive products and systems and associated work for compliance with requirements for installation tolerances, metal wall panel supports, and other conditions affecting performance. Proceed only when unsatisfactory conditions have been corrected in a manner complying with Contract Documents. Starting work within a particular area will be construed as acceptance of surface conditions.

1. Examine wall framing to verify that girts, angles, channels, studs, and other structural panel support members and anchorage have been installed within alignment tolerances required by metal wall panel manufacturer.
2. Examine wall sheathing to verify that sheathing joints are supported by framing or blocking and that installation is within flatness tolerances required by metal wall panel manufacturer.

3. Verify that weather-resistant sheathing paper has been installed over sheathing or backing substrate to prevent air infiltration or water penetration.

B. Examine roughing-in for components and systems penetrating metal wall panels to verify actual locations of penetrations relative to seam locations of metal wall panels before metal wall panel installation.

3.2 INSTALLATION, GENERAL

A. Installation Quality Standards: In addition to standards listed elsewhere, perform Work according to following, unless otherwise specified:

1. Respective manufacturer's written installation instructions.
2. Accepted submittals.
3. Contract Documents.

B. Control of Corrosion: Prevent galvanic action and other forms of corrosion by isolating metals and other materials from direct contact with incompatible materials.

3.3 PREPARATION

A. General: Comply with manufacturer's instructions, recommendations and specifications for cleaning and surface preparation. Surfaces shall have no defects, contaminants, or errors which would result in poor or potentially defective installation or would cause latent defects in Work.

B. Miscellaneous Framing: Install subgirts, base angles, sills, furring, and other miscellaneous wall panel support members and anchorages according to ASTM C 754 and metal wall panel manufacturer's written recommendations.

3.4 WALL PANEL ASSEMBLY INSTALLATION

A. General: Install metal wall panels according to manufacturer's written instructions in orientation, sizes, and locations indicated on Drawings.

B. Wall Panels: Install wall panels perpendicular to girts and subgirts unless otherwise indicated. Anchor metal wall panels and other components of the Work securely in place, with provisions for thermal and structural movement.

1. Shim or otherwise plumb substrates receiving metal wall panels.
2. Flash and seal metal wall panels at perimeter of all openings. Fasten with self-tapping screws. Do not begin installation until weather barrier and flashings that will be concealed by metal wall panels are installed.
3. Install screw fasteners in predrilled holes.

    a. Air and Water Barrier: Install a strip of barrier flashing tape behind through-wall attachments that penetrate air and water barrier.

4. Locate and space fastenings in uniform vertical and horizontal alignment.
5. Install flashing and trim as metal wall panel work proceeds.
6. Locate panel splices over, but not attached to, structural supports. Stagger panel splices and end laps to avoid a four-panel lap splice condition.

7. Apply elastomeric sealant continuously between metal base channel (sill angle) and concrete and elsewhere as indicated or, if not indicated, as necessary for waterproofing.
8. Align bottom of metal wall panels and fasten with blind rivets, bolts, or self-tapping screws. Fasten flashings and trim around openings and similar elements with self-tapping screws.
9. Provide weathertight escutcheons for pipe and conduit penetrating exterior walls.
10. Cover fasteners with rubberized asphalt flashing strips.

C. Fasteners: Use stainless-steel fasteners for surfaces exposed to the exterior; use galvanized steel fasteners for surfaces exposed to the interior.

D. Metal Protection: Protect metals against galvanic action by separating dissimilar metals from contact with each other or with corrosive substrates by painting contact surfaces with bituminous coating or by other permanent separation as recommended by manufacturer.

E. Joint Sealers: Install gaskets, joint fillers, and sealants where indicated and where required for weathertight performance of metal wall panel assemblies. Provide types of gaskets, fillers, and sealants indicated or, if not indicated, types recommended by metal wall panel manufacturer.

1. Seal metal wall panel end laps with double beads of tape or sealant, full width of panel. Seal side joints where recommended by metal wall panel manufacturer.
2. Prepare joints and apply sealants to comply with requirements in Division 07 Section "Joint Sealants".

F. Lap-Seam Metal Wall Panels: Fasten metal wall panels to supports with fasteners at each lapped joint at location and spacing recommended by manufacturer.

1. Lap ribbed or fluted sheets one full rib corrugation. Apply panels and associated items for neat and weathertight enclosure. Avoid "panel creep" or application not true to line.
2. Provide metal-backed washers under heads of exposed fasteners bearing on weather side of metal wall panels.
3. Locate and space exposed fasteners in uniform vertical and horizontal alignment. Use proper tools to obtain controlled uniform compression for positive seal without rupture of washer.
4. Install screw fasteners with power tools having controlled torque adjusted to compress washer tightly without damage to washer, screw threads, or panels. Install screws in predrilled holes.
5. Provide sealant tape at lapped joints of metal wall panels and between panels and protruding equipment, vents, and accessories.
6. Apply a continuous ribbon of sealant tape to weather-side surface of fastenings on end laps; on side laps of nesting-type panels; on side laps of corrugated nesting-type, ribbed, or fluted panels; and elsewhere as needed to make panels weathertight.
7. At panel splices, nest panels with minimum 6 in (150 mm) end lap, sealed with butyl-rubber sealant and fastened together by interlocking clamping plates.

3.5 METAL SOFFIT PANEL INSTALLATION

A. In addition to complying with requirements in "Wall Panel Assembly Installation" Article, install metal soffit panels to comply with requirements in this article.

B. Metal Soffit Panels: Provide metal soffit panels full width of soffits. Install panels perpendicular to support framing.

1. Flash and seal panels with weather closures where metal soffit panels meet walls and at perimeter of all openings.

C. Metal Fascia Panels: Align bottom of panels and fasten with blind rivets, bolts, or self-tapping screws. Flash and seal panels with weather closures where fasciae meet soffits, along lower panel edges, and at perimeter of all openings.

3.6 ACCESSORY INSTALLATION

A. General: Install accessories with positive anchorage to building and weathertight mounting, and provide for thermal expansion. Coordinate installation with flashings and other components.

1. Install components required for a complete metal wall panel assembly including trim, copings, corners, seam covers, flashings, sealants, gaskets, fillers, closure strips, and similar items.

B. Flashing and Trim: Comply with performance requirements, manufacturer's written installation instructions, and SMACNA's "Architectural Sheet Metal Manual." Provide concealed fasteners where possible, and set units true to line and level as indicated. Install work with laps, joints, and seams that will be permanently watertight and weather resistant.

1. Install exposed flashing and trim that is without excessive oil canning, buckling, and tool marks and that is true to line and levels indicated, with exposed edges folded back to form hems. Install sheet metal flashing and trim to fit substrates and to result in weathertight and weather-resistant performance.
2. Expansion Provisions: Provide for thermal expansion of exposed flashing and trim. Space movement joints at a maximum of 10 ft (3 m) with no joints allowed within 24 in (600 mm) of corner or intersection. Where lapped expansion provisions cannot be used or would not be sufficiently weather resistant and weathertight, form expansion joints of intermeshing hooked flanges, not less than 1 in (25 mm) deep, filled with mastic sealant (concealed within joints).

3.7 FIELD QUALITY CONTROL

A. Manufacturer's Field Service: Manufacturer's qualified technical representative shall periodically inspect Work to ensure installation is proceeding in accordance with manufacturer's designs, recommendations, instructions, and warranty requirements. Representative shall submit written reports of each visit indicating observations, findings, and conclusions of inspection.

1. Manufacturer's Technical Representative Qualifications: Direct employee of technical services department of manufacturer with experience in providing recommendations, observations, evaluations, and problem diagnostics.

B. Testing Agency Field Service: Engage a qualified independent testing agency to perform field quality control. Materials and installation failing to meet specified requirements shall be replaced at Contractor's expense. Retesting of materials and installations failing to meet specified requirements shall be done at Contractor’¢s expense.

C. Owner's Testing Agency Field Service: The Owner may employ and pay a qualified independent testing agency to perform field quality control. Materials and installation failing to meet specified requirements shall be replaced at Contractor's expense. Retesting of materials and installations failing to meet specified requirements shall be done at Contractor'¢s expense.

1. Before installation of interior finishes, wall panel system shall be tested in accordance with Division 01 Section "Field Test for Water Leakage".

D. Prepare test and inspection reports.

3.8 CLEANING

A. Remove temporary protective coverings and strippable films, if any, as metal wall panels are installed, unless otherwise indicated in manufacturer's written installation instructions. On completion of metal wall panel installation, clean finished surfaces as recommended by metal wall panel manufacturer. Maintain in a clean condition during construction.

B. After metal wall panel installation, clear weep holes and drainage channels of obstructions, dirt, and sealant.

C. Replace metal wall panels that have been damaged or have deteriorated beyond successful repair by finish touchup or similar minor repair procedures.

3.9 ARCHITECTURAL METAL FINISH SCHEDULE: Refer to Exterior Elevation drawings.

END OF SECTION

SECTION 07 4243

COMPOSITE METAL WALL PANELS

PART 1 - GENERAL

1.1 SUMMARY

A. Section Includes: Factory-formed composite metal wall panels and supplementary items necessary for installation.

1.2 DEFINITIONS

A. Metal Wall Panel Assembly: Metal wall panels, attachment system components, miscellaneous metal framing, and accessories necessary for a complete wall panel system.

1.3 DELEGATED ENGINEERING REQUIREMENTS

A. Contract Documents Design Intent: Drawings and Specifications indicate design intent for products and systems and do not necessarily indicate or specify total Work required. Contract Documents shall not be construed as an engineered design; furnish and install all Work required for a complete installation.

B. Delegated Engineering Responsibility: Contractor shall employ a qualified professional engineer to provide engineering for products and systems including attachment to building structure required to meet design intent of Contract Documents.

1. Preparation of structural analysis data including engineering calculations, shop drawings and other submittals signed and sealed by the qualified professional engineer.

C. Delegated Engineering Professional Qualifications: Professional engineer legally authorized to practice in jurisdiction where Project is located and experienced in providing engineering services of kind indicated for products and systems similar to this Project and has a record of successful in-service performance.

D. Coordination of Contract Documents and Work:

1. Product Variations: In the event of minor differences between products and systems of acceptable or available manufacturers, Contractor shall notify Architect of such differences and resolve conflicts in a timely manner. Failure of Contractor to provide notification shall be construed as acceptance of conditions indicated, and changes caused by minor differences between products and Contract Documents shall be included in the Work at no additional cost to Owner.

2. Allowable Adjustments: Minor dimension and profile adjustments may be made in interest of fabrication or erection methods or techniques or ability to satisfy design intent, provided design intent is maintained as determined by Architect. Proposed deviations shall include a detailed analysis of impact to adjacent substrates or other building systems, including related design or construction cost impacts. If accepted by Architect, deviations causing changes in materials, constructability, substrates, or conditions shall be included in the Work at no additional cost to Owner

1.4 ACTION SUBMITTALS

A. Product Data: Manufacturer's technical literature for each product and system indicated.

1. Include manufacturer's specifications for materials, finishes, construction details, installation instructions, and recommendations for maintenance.

B. Shop Drawings: Show details of fabrication and installation, including plans, elevations, sections, details of components and attachments to other work. Distinguish between shop and field-assembled work. Include the following:

1. Show fabrication and installation layouts of metal wall panels.
2. Show details of edge conditions, side-seam and end-lap joints, panel profiles, corners, anchorages, trim, flashings, closures, and terminations.
3. Show details for securing metal wall panel assembly, including layout of fasteners and other attachments.
4. Show details of wall panel penetrations.
5. Show details of connections to adjoining work.
6. Indicate where and how the system deviates from Contract Documents.
7. Shop drawings shall contain seal of a professional engineer currently registered in licensing jurisdiction of the project and a written statement that the framing system conforms to project requirements, applicable codes, and specified conditions.
8. Provide for information only, material properties and other information needed for structural analysis including computations, prepared, signed, or, and sealed by a professional engineer licensed to practice in the jurisdiction where the project is located.
9. Submittal shall contain statement explaining how proposed system design will accommodate infiltrated and condensate water.
10. Design Modifications: If design modifications are proposed to meet performance requirements and field conditions, submit design calculations and Shop Drawings. Do not adversely affect the appearance, durability, or strength of units when modifying details or materials and maintain the general design concept.
11. Include laboratory mock-up Shop Drawings, prepared by a qualified preconstruction testing agency, showing details of laboratory mock-up.

    a. Resubmit Shop Drawings with changes made to details of glazed aluminum framing systems, to successfully complete preconstruction testing.

C. Coordination Drawings: Exterior elevations drawn to scale and coordinating penetrations and wall-mounted items. Show the following:

1. Wall panel assembly and attachments.
2. Girts and framing.
3. Wall-mounted items including doors, windows, louvers, and lighting fixtures.

4. Penetrations of wall panels by pipes and utilities.

D. Samples for Initial Selection: For each type of metal wall panel indicated with factory-applied color finishes.

1. Include similar samples of trim and accessories involving color selection.
2. Include manufacturer's color charts consisting of strips of cured sealants showing the full range of colors available for each sealant exposed to view.

E. Samples for Verification Purposes: For each type of exposed finish required, prepared on samples of size indicated below.

1. Metal Wall Panels: 12 in (300 mm) long by actual panel width. Include fasteners, closures, and other metal wall panel accessories.
2. Trim and Closures: 12 in (300 mm) long. Include fasteners and other exposed accessories.
3. Accessories: 12 in (300 mm) long samples for each type of accessory.
4. Exposed Gaskets: 12 in (300 mm) long.
5. Exposed Sealants: For each type and color of joint sealant required. Install joint sealants in 1/2 in (12 mm) wide joints formed between two 6 in (150 mm) long strips of material matching the appearance of metal-faced composite wall panels adjacent to joint sealants.

1.5 INFORMATIONAL SUBMITTALS

A. Delegated Engineering Calculations: Informational submittal for products indicated to comply with design loads, include structural analysis data signed and sealed by the qualified professional engineer responsible for their preparation; test reports are not acceptable substitute for calculations.

B. Manufacturer's Project Acceptance Document: Certification by the manufacturer that its product(s) are approved, acceptable, suitable for use in specific locations, for specific details, and for applications indicated, specified, or required, and that a warranty will be issued.

C. Product Test Reports: Written reports based on evaluation of comprehensive tests performed by qualified testing agency indicating that each product complies with requirements.

1. Product Approvals: Submit Florida Product Approval or Product Control Notice of Acceptance (NOA) issued by Miami-Dade County Building Code Compliance Office (BCCO) or other product approval acceptable to authorities having jurisdiction for systems used at exterior of building.

D. Field Quality Control Reports: Written report of testing and inspection required by "Field Quality Control".

E. Preconstruction Compatibility and Adhesion Test Reports: From sealant manufacturer, indicating the following:

1. Materials forming joint substrates and joint-sealant backings have been tested for compatibility and adhesion with joint sealants.

2. Interpretation of test results and written recommendations for primers and substrate preparation needed for adhesion.

F. Qualification Data:

1. For firms and persons specified in "Quality Assurance" to demonstrate their capabilities and experience. Include list of completed projects.

G. Warranty: Sample of warranty.

1. Provide manufacturer's written warranty covering materials and installation (labor) stating obligations, remedies, limitations and exclusions.

1.6 CLOSEOUT SUBMITTALS

A. Maintenance Data: To include in maintenance manuals.

1.7 QUALITY ASSURANCE

A. Manufacturer Qualifications: Manufacturer with not less than 10 years of experience in the successful production and in-service performance of products and systems similar to scope of this Project.

B. Installer/fabricator Qualifications:

1. Experience: Installer's personnel with not less than 5 years of experience in the successful performance of Work similar to scope of this Project.
2. Supervision: Installer shall maintain a competent supervisor at Project while the Work is in progress, and who has not less than 5 years of experience installing products and systems similar to scope of this Project
3. Manufacturer Acceptance: Installer/fabricator shall be certified, approved, licensed, or acceptable to manufacturer to install products.

C. Preconstruction Testing Service: Provide composite metal wall panels that comply with test-performance requirements indicated, as evidenced by reports based on Project-specific preconstruction testing by a qualified testing agency.

1. Refer to Division 01 Section "Testing Mock-up For Building Enclosure Systems".

D. Preconstruction Compatibility and Adhesion Testing: Submit samples of materials that will contact joint sealants to joint-sealant manufacturers for testing indicated in subparagraphs below:

1. Use manufacturer's standard test methods to determine whether priming and other specific joint preparation techniques are required to obtain rapid, optimum adhesion of joint sealants to joint substrates.

a. Perform tests under environmental conditions replicating those that will exist during installation.

2. Submit no fewer than nine pieces of each type of material, including joint substrates, shims, joint-sealant backings, secondary seals, and miscellaneous materials.
3. Schedule enough time for testing and analyzing results to prevent delaying the Work.
4. For materials failing tests, obtain joint-sealant manufacturer's written instructions for corrective measures, including use of specially formulated primers.

E. Mock-ups: Prior to fabrication and installation, build mock-up for each form of construction and finish required to verify selections made under sample Submittals and to demonstrate aesthetic effects and qualities of materials and execution. Build mock-up using materials indicated for the completed Work.

1. Build mock-up in the location and of the size indicated or, if not indicated, as directed by Architect. Contractor shall provide structural support framework.

    a. Show typical components, attachments to building structure, and requirements of installation.

2. Notify Architect seven days in advance of the dates and times when mock-up will be installed.
3. Obtain Architect's acceptance of mock-ups before starting fabrication or installation.
4. Acceptance of mock-ups does not constitute acceptance of deviations from the Contract Documents contained in mock-ups unless such deviations are specifically noted by Contractor and accepted by Architect in writing.
5. Demolish and remove mock-ups when directed by Architect unless accepted to become part of the completed Work

1.8 PRE-INSTALLATION CONFERENCE

A. Pre-Installation Conference: Before Work begins, conduct conference at Project site.

1. Participants:

    a. Architect.
    b. Contractor, including superintendent.
    c. Installer/fabricator, including project manager and supervisor.
    d. If requested, Manufacturer's qualified technical representative.
    e. Installers of other construction interfaced with Work.
    f. Testing agency.

2. Minimum Agenda: Installer shall demonstrate understanding of the Work required by describing detailed procedures for preparing, installing, and cleaning the Work. Demonstration shall include, but not be limited to, following topics:

    a. Tour representative areas of Work, inspect and discuss condition of substrate, and other preparatory work performed by other trades.
    b. Review Contract Document requirements.
    c. Review approved submittals.
    d. Review inspection and testing requirements.
    e. Review environmental conditions and procedures for coping with unfavorable conditions.

f. Resolve deviations or differences between Contract Documents and the manufacturer's specifications.

3. Record discussions, including decisions and agreements, and prepare report.

1.9 DELIVERY, STORAGE, AND HANDLING

A. Deliver components, sheets, metal wall panels, and other manufactured items so as not to be damaged or deformed. Package metal wall panels for protection during transportation and handling.

B. Unload, store, and erect metal wall panels in a manner to prevent bending, warping, twisting, and surface damage.

C. Stack metal wall panels horizontally on platforms or pallets, covered with suitable weathertight and ventilated covering. Store metal wall panels to ensure dryness, with positive slope for drainage of water. Do not store metal wall panels in contact with other materials that might cause staining, denting, or other surface damage.

D. Retain strippable protective covering on metal wall panel for period of metal wall panel installation.

1.10 PROJECT CONDITIONS

A. Weather Limitations: Proceed with installation only when existing and forecasted weather conditions permit assembly of metal wall panels to be performed according to manufacturer's written instructions and warranty requirements.

B. Field Measurements: Where products and systems are indicated to fit walls and other construction, verify dimensions by field measurements before fabrication.

1.11 COORDINATION

A. Coordinate installation of products and systems with interfacing and adjoining construction to provide a successful installation without failure.

1.12 WARRANTY

A. Manufacturer's Warranty: Furnish manufacturer's written material and labor warranty signed by an authorized representative using manufacturer's standard form agreeing to furnish materials and labor required to repair or replace work which exhibits material defects caused by manufacture or design of product. "Defects" are defined to include but not limited to deterioration or failure to perform as required.

1. Coverage of warranty includes but is not limited to the following:

a. Structural failures including, but not limited to, excessive deflection.
b. Noise or vibration created by wind and thermal and structural movements.
c. Deterioration of metals and other materials beyond normal weathering.
d. Water penetration through fixed panels.

2. Warranty Period: Manufacturer shall warrant the products to be free from material and labor Defects for a period of 5 years from date of Substantial Completion

B. Installer/Fabricator's Warranty: Furnish installer/fabricator's written workmanship warranty signed by an authorized representative using installer/fabricator's standard form agreeing to provide labor required to repair or replace work which exhibits workmanship defects. "Defects" is defined to include but not limited to deterioration or failure to perform as required.

1. Warranty Period: Installer/fabricator shall warrant the installation to be free from workmanship Defects for a period of 2 years from date of Substantial Completion.

C. Factory Applied Finish Warranty for High-Performance Fluoropolymer Finishes: Furnish manufacturer's written warranty signed by an authorized representative using manufacturer's standard form agreeing to repair finish or replace work which exhibits finish defects. "Defects" is defined to include but not limited to deterioration or failure of finish to perform as required.

1. Coverage includes, but is not limited to, the following:

a. Color fading more than 5 Hunter units when tested according to ASTM D 2244.
b. Chalking in excess of a No. 8 rating when tested according to ASTM D 4214.
c. Cracking, checking, peeling, or failure of paint to adhere to bare metal.

2. Warranty Period: Manufacturer shall warrant the installation to be free from finish defects for a period of 20 years from date of Substantial Completion.

PART 2 - PRODUCTS

2.1 MANUFACTURERS AND PRODUCTS

A. Acceptable Manufacturers: Subject to compliance with requirements of Contract Documents as judged by the Architect, provide product by one of manufacturers listed. If not listed, submit as substitution according to the Conditions of the Contract and Division 01 Section "Substitution Procedures".

1. Alcoa Inc.
2. Citadel
3. Alucobond, division of 3A Cpmposites USA, Inc.
4. ALPOLIC, division of Mitsubishi Plastic Composites America, Inc.
5. Larson, by Alucoil North America.

B. System Type:

1. Rear Ventilated Rain Screen: System with open reveal joints; no field sealant required in joints unless otherwise indicated.
2. Rout and Return Dry Seal: System with perimeter aluminum extrusion with integral weather-stripping; no field sealant required in joints unless otherwise indicated.
3. Rout and Return Wet Seal: System with wet sealed (caulked) reveal joints.

2.2 MATERIALS, GENERAL

A. Single Source Responsibility: Furnish each type of product from single manufacturer. Provide secondary materials only as recommended by manufacturer of primary materials.

2.3 PERFORMANCE REQUIREMENTS; EXTERIOR PANELS

A. General Performance: Engineer products and systems to withstand loads within limits of allowable working stresses of the materials involved under conditions indicated and without permanent deformation or failure of materials.

B. Delegated Design: Design metal wall panel assembly, including comprehensive engineering analysis by a qualified professional engineer, using performance requirements and design criteria indicated.

C. Design Loads: Engineer to withstand design loads including, but not limited to, gravity, wind, seismic, and erection design loads and thermal movements established by authorities having jurisdiction, applicable local building codes, and as indicated.

1. Structural Movement: Engineer to withstand movements of structure including, but not limited to, drift, twist, column shortening, long-term creep and deflection from uniformly distributed and concentrated live loads. Contractor shall obtain required design data and identify movements accommodated on submittal drawings.

D. Structural-Test Performance: Provide metal wall panel assemblies capable of withstanding the effects of gravity loads and the following loads and stresses within limits and under conditions indicated, based on testing according to ASTM E 1592 or ASTM E 330 as follows:

1. When tested at positive and negative wind-load design pressures, assemblies do not evidence deflection no greater than 1/240 of the span.
2. When tested at 150 percent of positive and negative wind-load design pressures, assemblies, including anchorage, do not evidence material failures, structural distress, and permanent deformation of main framing members exceeding 0.2 percent of span.

E. Windborne-Debris-Impact-Resistance Performance: Comply with impact resistance testing requirements for Wind Zone.

F. Air Infiltration: Air leakage through assembly of not more than 0.06 cfm/sf (0.30 L/s/sm) of wall area when tested according to ASTM E 283 at a static-air-pressure difference of 6.24 lbf/sf (300 Pa).

G. Water Penetration under Static Pressure: No evidence of water penetration through fixed panels and framing areas when tested according to ASTM E 331 at a minimum static-air-pressure differential of 20 percent of positive wind-load design pressure not less than 6.24 lbf/sf (300 Pa).

H. Thermal Movements: Engineer products and systems to accommodate thermal movements of supporting elements resulting from the following maximum change (range) in ambient and surface temperatures without buckling, damaging stresses, damaging loads on fasteners, failure of operating units to function properly, and other detrimental effects.

1. Temperature Change (Range): 120 deg F (49 deg C), ambient; 180 deg F (82 deg C), material surfaces.

I. Dimensional Tolerances: Engineer products and systems to accommodate dimensional tolerances of framing members and adjacent construction.

2.4 COMPOSITE METAL WALL PANELS

A. General: Provide factory-formed and -assembled, metal-faced composite wall panels fabricated from two metal facings bonded, using no glues or adhesives, to manufacturer'¢s solid, extruded thermoplastic core; formed into profile for installation method indicated. Include attachment system components and accessories required for weathertight system.

B. Exterior Panels:

1. Fire-Retardant Core: Noncombustible, with the following Class A surface-burning characteristics as determined by testing identical products per ASTM E 84 by UL or another testing and inspecting agency acceptable to authorities having jurisdiction:

a. Flame-Spread Index: 25 or less.
b. Smoke-Developed Index: 450 or less.

2. NFPA 285 Compliance: Provide panels and assembly that comply with and pass NFPA 285 "Standard Method of Test for the Evaluation of Fire Propagation Characteristics of Exterior Non-Load Bearing Wall Assemblies Containing Combustible Components."

C. Aluminum Facing Sheets: Coil-coated sheets, ASTM B 209 / B 209M, alloy as standard with manufacturer, with temper as required to suit forming operations and structural performance required.

1. Surface: Smooth and flat.
2. Thickness: 0.020 in (0.50 mm).
3. Core: Fire retardant.
4. Exposed Coil-Coated Finish: Fluoropolymer finish as specified elsewhere in this Section.
5. Concealed Finish: Apply pretreatment and manufacturer's standard white or light-colored acrylic or polyester backer finish, consisting of prime coat and wash coat with a minimum total dry film thickness of 0.5 mils (0.013 mm).

D. Overall Panel Thickness: 0.157 in (4 mm) minimum.

2.5 METAL SOFFIT PANELS

A. Composite Metal Soffit Panels: Composite metal wall panel manufacturer's standard panel for horizontal conditions; meeting same requirements as that for specified vertical panels.

2.6 WALL PANEL ASSEMBLY ACCESSORIES

A. General: Provide components approved by metal wall panel manufacturer and as required for a complete assembly including trim, corner units, closures, clips, flashings, sealants, gaskets, fillers, closure strips, and similar items. Match material and finish of metal wall panels, unless otherwise indicated.

B. Panel Sealants: As specified in Division 07 Section "Joint Sealants" and as recommended in writing by panel manufacturer.

C. Panel Fasteners: Self-tapping screws, bolts, nuts, self-locking rivets and bolts, end-welded studs, and other suitable fasteners designed to withstand design loads as appropriate for metal wall panel material.

1. Concealed Fasteners: Provide concealed fasteners with EPDM, PVC, or neoprene sealing washers.

D. Aluminum Extrusions: ASTM B 221 / B 221M, alloy and temper recommended by manufacturer for type of use and finish indicated.

E. Bituminous Coating: Cold-applied asphalt mastic, SSPC-Paint 12, or cold-applied asphalt emulsion complying with ASTM D 1187; compounded for 15 mils (0.4 mm) dry film thickness per coat. Provide inert-type noncorrosive compound free of asbestos fibers, sulfur components, and other deleterious impurities.

F. Barrier Flashing Tape: Air-barrier manufacturer's standard adhesive and pressure-sensitive adhesive tape. Refer to Division 07 Section Air and Water Barriers.

2.7 MISCELLANEOUS METAL FRAMING

A. Miscellaneous Metal Framing, General: ASTM C 645, cold-formed metallic-coated steel sheet, ASTM A 653 / A 653M, G90 (Z275) hot-dip galvanized or coating with equivalent corrosion resistance unless otherwise indicated.

B. Subgirts: Manufacturer's standard C- or Z-shaped sections, 0.053 in (16 gage) (1.3 mm) nominal thickness.

C. Zee Clips: 0.053 in (16 gage) (1.3 mm) nominal thickness.

D. Base or Sill Angles or Channels: 0.053 in (16 gage) (1.3 mm) nominal thickness.

E. Fasteners for Miscellaneous Metal Framing: Of type, material, size, corrosion resistance, holding power, and other properties required to fasten miscellaneous metal framing members to substrates.

2.8 FABRICATION

A. General: Fabricate and finish metal wall panels and accessories at the factory to greatest extent possible, by manufacturer's standard procedures and processes, as necessary to fulfill indicated performance requirements demonstrated by laboratory testing. Comply with indicated profiles and with dimensional and structural requirements.

B. Fabricate metal wall panels in a manner that eliminates condensation on interior side of panel and with joints between panels designed to form weathertight seals.

C. Metal-Faced Composite Wall Panels: Factory form panels in a continuous process with no glues or adhesives between dissimilar materials. Trim and square edges of sheets with no displacement of face sheets or protrusion of core material.

1. Form panel lines, breaks, and angles to be sharp and true, with surfaces free from warp and buckle.
2. Fabricate panels with sharply cut edges, with no displacement of face sheets or protrusion of core material.
3. Fabricate panels with panel stiffeners, as required to comply with deflection limits, attached to back of panels with structural silicone sealant or bond tape.
4. Dimensional Tolerances:

    a. Panel Bow: 0.8 percent maximum of panel length or width.
    b. Squareness: 0.25 in (5 mm) maximum.

D. Sheet Metal Accessories: Fabricate flashing and trim to comply with recommendations in SMACNA's "Architectural Sheet Metal Manual" that apply to the design, dimensions, metal, and other characteristics of item indicated.

1. Form exposed sheet metal accessories that are without excessive oil canning, buckling, and tool marks and that are true to line and levels indicated, with exposed edges folded back to form hems.
2. Seams: Fabricate nonmoving seams in accessories with flat-lock seams. Tin edges to be seamed, form seams, and solder.
3. Sealed Joints: Form non-expansion but movable joints in metal to accommodate elastomeric sealant to comply with SMACNA standards.
4. Conceal fasteners and expansion provisions where possible. Exposed fasteners are not allowed on faces of accessories exposed to view.
5. Fabricate cleats and attachment devices from same material as accessory being anchored or from compatible, noncorrosive metal recommended by metal wall panel manufacturer.

    a. Size: As recommended by SMACNA's "Architectural Sheet Metal Manual" or metal wall panel manufacturer for application but not less than thickness of metal being secured.

2.9 FINISHES, GENERAL

A. Comply with NAAMM's "Metal Finishes Manual for Architectural and Metal Products" for recommendations for applying and designating finishes.

B. Protect mechanical finishes on exposed surfaces from damage by applying a strippable, temporary protective covering before shipping.

C. Appearance of Finished Work: Variations in appearance of abutting or adjacent pieces are acceptable if they are within one-half of the range of accepted Samples. Noticeable variations in the same piece are not acceptable. Variations in appearance of other components are acceptable if they are within the range of accepted Samples and are assembled or installed to minimize contrast.

2.10 ALUMINUM FINISHES

A. High-Performance Organic Finish: Prepare, pretreat, and apply coating to exposed metal surfaces to comply with coating and resin manufacturers' written instructions. Provide dry film thickness, primers, color coats and clear coats required to comply with performance requirements and warranty periods indicated.

1. PVDF Fluoropolymer Finish: Fluoropolymer finish complying with AAMA 2605 and containing not less than 70 percent PVDF resin by weight in color coat.
2. FEVE Fluoropolymer Finish: Fluoropolymer finish complying with AAMA 2605 and containing 100 percent fluorinated ethylene vinyl ether (FEVE) resin in color coat.
3. Selections: As scheduled or as indicated in Design Selections.

PART 3 - EXECUTION

3.1 EXAMINATION

A. Acceptance of Surfaces and Conditions: Examine substrates to receive products and systems and associated work for compliance with requirements for installation tolerances, metal wall panel supports, and other conditions affecting performance. Proceed only when unsatisfactory conditions have been corrected in a manner complying with Contract Documents. Starting work within a particular area will be construed as acceptance of surface conditions.

1. Examine wall framing to verify that girts, angles, channels, studs, and other structural panel support members and anchorage have been installed within alignment tolerances required by metal wall panel manufacturer.
2. Examine wall sheathing to verify that sheathing joints are supported by framing or blocking and that installation is within flatness tolerances required by metal wall panel manufacturer.
3. Verify that weather-resistant sheathing paper has been installed over sheathing or backing substrate to prevent air infiltration or water penetration.

B. Examine roughing-in for components and systems penetrating metal wall panels to verify actual locations of penetrations relative to seam locations of metal wall panels before metal wall panel installation.

3.2 INSTALLATION, GENERAL

A. Installation Quality Standards: In addition to standards listed elsewhere, perform Work according to following, unless otherwise specified:

1. Respective manufacturer’s written installation instructions.
2. Accepted submittals.
3. Contract Documents.

B. Control of Corrosion: Prevent galvanic action and other forms of corrosion by isolating metals and other materials from direct contact with incompatible materials.

3.3 PREPARATION

A. General: Comply with manufacturer's instructions, recommendations and specifications for cleaning and surface preparation. Surfaces shall have no defects, contaminants, or errors which would result in poor or potentially defective installation or would cause latent defects in Work.

B. Miscellaneous Framing: Install subgirts, base angles, sills, furring, and other miscellaneous wall panel support members and anchorages according to ASTM C 754 and metal wall panel manufacturer's written recommendations.

3.4 WALL PANEL ASSEMBLY INSTALLATION

A. General: Install metal wall panels and accessories according to manufacturer's written instructions in orientation, sizes, and locations indicated on Drawings.

B. Wall Panels: Install wall panels perpendicular to girts and subgirts unless otherwise indicated. Anchor metal wall panels and other components of the Work securely in place, with provisions for thermal and structural movement.

1. Shim or otherwise plumb substrates receiving metal wall panels.
2. Flash and seal metal wall panels at perimeter of all openings. Fasten with self-tapping screws. Do not begin installation until weather barrier and flashings that will be concealed by metal wall panels are installed.
3. Install screw fasteners in predrilled holes.

    a. Air and Water Barrier Sheet Good Substrate: Install a strip of barrier flashing tape behind through-wall attachments that penetrate air and water barrier.

4. Locate and space fastenings in uniform vertical and horizontal alignment.
5. Install flashing and trim as metal wall panel work proceeds.
6. Locate panel splices over, but not attached to, structural supports. Stagger panel splices and end laps to avoid a four-panel lap splice condition.
7. Apply elastomeric sealant continuously between metal base channel (sill angle) and concrete and elsewhere as indicated or, if not indicated, as necessary for waterproofing.
8. Align bottom of metal wall panels and fasten with blind rivets, bolts, or self-tapping screws. Fasten flashings and trim around openings and similar elements with self-tapping screws.
9. Provide weathertight escutcheons for pipe and conduit penetrating exterior walls.

C. Fasteners: Use stainless-steel fasteners for surfaces exposed to the exterior; use galvanized steel fasteners for surfaces exposed to the interior.

D. Metal Protection: Protect metals against galvanic action by separating dissimilar metals from contact with each other or with corrosive substrates by painting contact surfaces with bituminous coating or by other permanent separation as recommended by manufacturer.

E. Joint Sealers: Install gaskets, joint fillers, and sealants where indicated and where required for weathertight performance of metal wall panel assemblies as specified in Division 07 Section “Joint Sealants” and as recommended by metal wall panel manufacturer.

1. Seal metal wall panel end laps with double beads of tape or sealant, full width of panel. Seal side joints where recommended by metal wall panel manufacturer.
2. Prepare joints and apply sealants to comply with requirements in Division 07 Section "Joint Sealants".

F. Attachment System Installation, General: Install attachment system required to support metal-faced composite wall panels and to provide a complete weathertight wall system, including subgirts, perimeter extrusions, tracks, drainage channels, panel clips, and anchor channels.

1. Include attachment to supports, panel-to-panel joinery, panel-to-dissimilar-material joinery, and panel-system joint seals.
2. Do not begin installation until weather barrier and flashings that will be concealed by composite panels are installed.

G. Rout and Return Wet Seal Clip Installation: Attach panel clips to supports at each metal-faced composite wall panel joint at locations, spacings, and with fasteners recommended by manufacturer. Attach routed-and-returned flanges of wall panels to panel clips with manufacturer's standard fasteners.

1. Seal horizontal and vertical joints between adjacent panels with sealant backing and sealant. Install sealant backing and sealant according to requirements specified in Division 07 Section "Joint Sealants".

3.5 METAL SOFFIT PANEL INSTALLATION

A. In addition to complying with requirements in "Wall Panel Assembly Installation" Article, install metal soffit panels to comply with requirements in this article.

B. Metal Soffit Panels: Provide metal soffit panels full width of soffits. Install panels perpendicular to support framing.

1. Flash and seal panels with weather closures where metal soffit panels meet walls and at perimeter of all openings.

C. Metal Fascia Panels: Align bottom of panels and fasten with blind rivets, bolts, or self-tapping screws. Flash and seal panels with weather closures where fasciae meet soffits, along lower panel edges, and at perimeter of all openings.

3.6 ACCESSORY INSTALLATION

A. General: Install accessories with positive anchorage to building and weathertight mounting, and provide for thermal expansion. Coordinate installation with flashings and other components.

1. Install components required for a complete metal wall panel assembly including trim, copings, corners, seam covers, flashings, sealants, gaskets, fillers, closure strips, and similar items.

B. Flashing and Trim: Comply with performance requirements, manufacturer's written installation instructions, and SMACNA's "Architectural Sheet Metal Manual." Provide concealed fasteners where possible, and set units true to line and level as indicated. Install work with laps, joints, and seams that will be permanently watertight and weather resistant.

1. Install exposed flashing and trim that is without excessive oil canning, buckling, and tool marks and that is true to line and levels indicated, with exposed edges folded back to form hems. Install sheet metal flashing and trim to fit substrates and to result in weathertight and weather-resistant performance.
2. Expansion Provisions: Provide for thermal expansion of exposed flashing and trim. Space movement joints at a maximum of 10 ft (3 m) with no joints allowed within 24 in (600 mm) of corner or intersection. Where lapped expansion provisions cannot be used or would not be sufficiently weather resistant and weathertight, form expansion joints of intermeshing hooked flanges, not less than 1 in (25 mm) deep, filled with mastic sealant (concealed within joints).

3.7 ERECTION TOLERANCES

A. Installation Tolerances: Shim and align metal-faced composite wall panel units within installed tolerance of 1/4 in per 20 ft (6 mm in 6 m), non-accumulative, on level, plumb, and location lines as indicated and within 1/8 in (3 mm) offset of adjoining faces and of alignment of matching profiles.

3.8 FIELD QUALITY CONTROL

A. Manufacturer's Field Service: Manufacturer's qualified technical representative shall periodically inspect Work to ensure installation is proceeding in accordance with manufacturer's designs, recommendations, instructions, and warranty requirements. Representative shall submit written reports of each visit indicating observations, findings, and conclusions of inspection.

1. Manufacturer's Technical Representative Qualifications: Direct employee of technical services department of manufacturer with experience in providing recommendations, observations, evaluations, and problem diagnostics

B. Testing Agency: Employ and pay a qualified independent testing agency to perform field quality control. Materials and installation failing to meet specified requirements shall be replaced at Contractor's expense. Retesting of materials and installations failing to meet specified requirements shall be done at Contractor’¢s expense.

C. Testing Agency: The Owner may employ and pay a qualified independent testing agency to perform field quality control. Materials and installation failing to meet specified requirements shall be replaced at Contractor's expense. Retesting of materials and installations failing to meet specified requirements shall be done at Contractor’¢s expense.

D. Rout and Return Wet Seal Installation:

1. Before installation of interior finishes, wall panel system shall be tested in accordance with Division 01 Section "Field Test for Water Leakage".

E. Prepare test and inspection reports.

3.9 CLEANING

A. Remove temporary protective coverings and strippable films, if any, as metal wall panels are installed, unless otherwise indicated in manufacturer's written installation instructions. On completion of metal wall panel installation, clean finished surfaces as recommended by metal wall panel manufacturer. Maintain in a clean condition during construction.

B. After metal wall panel installation, clear weep holes and drainage channels of obstructions, dirt, and sealant.

C. Replace metal wall panels that have been damaged or have deteriorated beyond successful repair by finish touchup or similar minor repair procedures.

3.10 ARCHITECTURAL METAL FINISH SCHEDULE: Refer to Exterior Elevations drawings.

END OF SECTION

SECTION 07 4244

COMPOSITE WOOD WALL PANELS

PART 1 GENERAL

1.01 SECTION INCLUDES

A. Wood veneer laminate panels.

B. Accessories

1.02 RELATED REQUIREMENTS

A. Section 05 40 00 – Cold-Formed Metal Framing

B. Section 06 10 00 – Rough Carpentry: Wall sheathing [and furring]

C. Section 07 25 00 – Air and Vapor Retarders

D. Section 07 62 00 – Sheet Metal Flashing and Trim.

E. Section 07 92 00 – Joint Sealants.

1.03 REFERENCE STANDARDS

A. ASTM E 84 – Standard Test Method for Surface Burning Characteristics of Building Materials; 2015a

B. AWPA U1 – Use Category System: User specification for Treated Wood; 2012

C. EN 438-7 – High-Pressure Decorative Laminates (HPL); 2005

D. ICC-ES – ESR-3462, Parklex Façade F Wall Panel Cladding System; 2017

1.04 ADMINISTRATIVE REQUIREMENTS

A. See Section 01 30 00 – Administrative Requirements for pre-installation meeting requirements.

B. Pre-Installation Conference: Convene conference 1 week before starting work to establish procedures to maintain optimum working conditions and to coordinate work with related and adjacent work.

1.05 SUBMITTALS

A. See Section 01 30 00 – Administrative Requirements for submittal procedures.

- OR -

A. See Section 01 33 00 – Submittal Procedures for additional requirements.

B. Product Data: Submit manufacturer's product data, including sub-framing system and accessories.

C. Shop Drawings: Show sub-framing spacing and member type, panel layout, fastener spacing, flashing locations, corner and transition details[, _____].

D. Samples: Submit three 8.5 by 11 samples of each finish/color of wall panels.

E. Manufacturer's Certification: Submit manufacturer's certification that materials comply with specified requirements and are suitable for intended application.

F. Installation Instructions: Manufacturer's written instructions including surface preparation and installation procedures.

1.06 QUALITY ASSURANCE

A. Fire resistant panel or slat products, Façade F, shall be stamped with manufacturer's name, address, product name, thickness, color, batch number and evaluation report number (ESR-3462).

1.07 MOCK-UP

A. See Section 01 40 00 – Quality Requirements for additional requirements.

B. Construct system mock-up panel size as directed; include: sub-framing, water-resistant membrane, air barrier, insulation, vapor barrier, back-up wall assembly; include: outside corner, inside corner, door/window opening, transition to adjacent materials.

C. Locate where directed by Architect.

D. Mock-up may remain as part of the Work.

1.08 DELIVERY, STORAGE, AND HANDLING

A. Transportation:
   1. Transport panels horizontally and strapped down to avoid sliding across one another.
   2. Protect edges and corners.
   3. Maintain in original protective packaging until use.

B. Storage:
   1. Store panels horizontally with supports no more than 31-1/2 (80 mm) inches apart.
   2. Store panels in clean dry location protected from rain and sun within manufacturer's recommended temperature and humidity range.

C. Handling:
   1. Wear protective gloves when handling.
   2. Follow manufacturer's recommendation for dust collection and removal.

1.09 WARRANTY

A. See Section 01 78 00 – Closeout Submittals for additional warranty requirements.

B. Provide manufacturer's standard 10-year warranty covering structural stability, color and finish retention.

PART 2 PRODUCTS

2.01 MANUFACTURERS

A. Parklex USA, Inc.; 212 River Park North Drive, Woodstock, GA 30188; telephone: 678-401-7403; website: http://www.parklex.com

B. Substitutions: Not allowed [See Section 01 60 00 – Product Requirements].

2.02 APPLICATIONS

A. System
   1. Description: Exposed fastened system
   2. Panel Type: Parklex Façade F (fireproof)
   3. Fastening System: Screws

2.03 MATERIALS

A. Panels: High Pressure Compact Laminate, composing of wood veneer and paper fibers treated with thermosetting resins, designed for flush assembly.
   1. Size: 48 by 96 inches (1220 by 2440 mm)
   2. Thickness: 10 mm
   3. Edge: Square

B. Soffit Panels: High Pressure Compact Laminate, composing of wood veneer and paper fibers treated with thermosetting resins, designed for flush assembly.
   1. Slat Type: Parklex Façade F (fireproof)
   2. Size: 48 by 96 inches (1220 by 2440 mm)
   3. Thickness: 10 mm
   4. Edge: Square
   5. Mounting Method: Exposed

C. Properties; EN438-7, and ICC ESR-3462:
   1. Dimensional Stability: 0.3 percent cumulative dimensional change
   2. Maximum Height of Impact with No Visible Signs of Cracking: ≥ 1,800 mm
   3. Tensile Strength (Long Grain): ≥ 60 MPa
   4. Flexural Strength:
      a. Long Grain: ≥ 80 MPa
      b. Cross Grain: ≥ 80 MPa

5. Thermal Resistance:
    b. Façade F: 0.220 k
6. UV Resistance:
    a. Contrast, Gray Scale Rating: ≥ 3
    b. Aspect Rating: ≥ 4
7. Artificial Weathering Resistance:
    a. Contrast, Gray Scale Rating: ≥ 3
    b. Appearance Rating: ≥ 4
8. Water Vapor Permeability:
    a. Wet Cup Method: 100μ
    b. Dry Cup Method: 250μ
9. Density: ≥ 1.35 g/cm^3
10. Water Absorption:
    b. Façade F: ≤ 8 percent
11. Fire Resistance ≥ 6 mm thickness:
    b. Façade F: B-s2, d0; ICC-ESR, ASTM E84: Class A, NFPA 285 (Exposed fastener system)

2.04 ACCESSORIES

A. Exposed Fasteners:
    1. Based on Parklex's recommendation.

B. Plugs: Matching veneer lumber unless otherwise indicated, 3/16 inch (14.3 mm) diameter.
    1. Use Parklex supplied drill bits for pre-drilling.

C. Sealant: Silicone type as specified under Section 07 92 00 – Joint Sealants.

D. Ventilation: Molded plastic or woven polyethylene designed for provide air flow behind panels but restrict insect entering air space.
    1. Product: Cor-A-Vent SV-5 by Cor-A-Vent or equal.

2.05 FINISHES

A. Exterior Panel Finishes: Onix, Copper & Antra.

PART 3 EXECUTION

3.01 EXAMINATION

A. Examine substrate and framing members for alignment

B. Notify Architect of conditions that would adversely affect installation.

C. Do not begin surface preparation or installation until unacceptable conditions are corrected.

D. Ensure that weather barrier is properly installed and undamaged.

3.02 PREPARATION

A. Securely install wall furring system plumb and square, and correctly spaced to accommodate panel or slat system.

3.03 INSTALLATION

A. Install panels in strict compliance with manufacturer's written instructions.
   1. Comply with ICC-ESR-3462 where Class A fire resistance is required.

B. Use recommended cutting tools, equipment, and procedures.

C. Provide a minimum of 1/4 inch (6 mm) expansion at panel edges.
   1. Do not seal joints.

D. Follow shop drawings for sub-framing support, and fastener location and spacing.

E. Provide 3/4 inch (19 mm) clear air gap behind panels[and install vent strips at top and bottom of wall as detailed].

3.04 EXPOSED FASTENER SYSTEMS

A. Ensure that mounting points are larger than fastener shank diameter as noted below, except for fixed, center-most fastener from which expansion and contraction occurs.
   1. Screws: 1/8 inch (3.2 mm)

B. Center fasteners within floating mounting points.

C. Fastener heads to be parallel with panel surface.

3.07 SOFFIT AND DROPPED CEILINGS

A. Install ceiling of soffit panels using exposed fastener system described above.

B. Maximum Furring Spacing:

1. Panel Thickness:	Max. Horizontal Spacing:
10 mm	23-5/8 inches (600 mm)

3.09 CLEANING

A. Clean stains and excess adhesive from panels following manufacturer's instructions.
   1. Do NOT use abrasive cleaning cloths or sponges, or harsh solvents such as acetone, ethyl acetate or MEK (Methyl Ethyl Keytone) on any surface to clean panels.

B. Completely remove protective film from panels immediately after installation

3.10 PROTECTION

A. Protect panels from damage by placing thick cardboard corners at building corners, and lining passageways and walls adjacent to material handling routes with protective pads or sheet goods.

B. If a panels or slats are damaged during construction or correction period, contact Parklex for instructions to send portion of damaged material to Parklex for replacement closely matching existing.

3.11 **WOOD PANELFINISH SCHEDULE:** Refer to Exterior Elevation drawings.

END OF SECTION

SECTION 07 4623

CEDAR SOFFIT SIDING

PART 1 GENERAL

1.1 SECTION INCLUDES

A. Tongue & Groove soffit siding.

1.2 RELATED SECTIONS

A. Division 06 - Rough Carpentry.

1.3 REFERENCES

A. Western Red Cedar Lumber Association "Designer's Handbook".

B. Western Red Cedar Lumber Association "Specifying Western Red Cedar Siding".

C. Western Red Cedar Lumber Association "Installing Cedar Siding".

D. Western Red Cedar Lumber Association "Guide to Finishing Western Red Cedar".

E. NLGA - National Lumber Grades Authority "Grading Standards".

F. WCLIB - West Coast Lumber Inspection Bureau "Grading Standards".

G. WWPA - Western Wood Products Association "Grading Rules".

1.4 SUBMITTALS

A. Submit under provisions of Section 01 30 00.

B. Western Red Cedar Lumber Association's data sheets on each product to be used, including:
   1. Preparation instructions and recommendations.
   2. Storage and handling requirements and recommendations.
   3. Installation methods.

C. Selection Samples: For each finished product specified, two complete sets of color chips representing manufacturer's full range of available materials and finished appearance.

D. Verification Samples: For each finish product specified, three samples, nominal size 5 1/2 inches (140 mm) square representing actual product with finished color and texture.

1.5 QUALITY ASSURANCE

A. Manufacturer Qualifications: Manufacturer shall be a member of the Western Red Cedar Lumber Association capable of providing all Western Red Cedar siding materials specified in this section.

B. Installer Qualifications:
   1. Installer shall have five (5) years experience installing cedar trim on the type and size of project specified by this section.
   2. Installer shall be licensed, registered or otherwise approved by the local jurisdiction to install Cedar Siding.

C. Installation: Products shall be installed according to Western Red Cedar Lumber Association installation guidelines and adhere to local building codes.

1.6 DELIVERY, STORAGE, AND HANDLING

A. Inspect the materials upon delivery to assure that specified products have been received.

B. Store materials in safe area, away from construction traffic; store under cover and off ground, protected from moisture.

C. Keep materials clearly separated and identified with grade marks legible. Keep damaged material identified as damaged and stored separately.

1.7 PROJECT CONDITIONS

A. Maintain environmental conditions (temperature, humidity, and ventilation) within limits recommended by manufacturer for optimum results. Do not install products under environmental conditions outside manufacturer's absolute limits.

1.8 SUPPLEMENTAL MATERIALS

A. Fasteners, supports, and hangers shall be provided by manufacturers other than member organizations of the WRCLA, and conform to the requirements set forth by this section.

PART 2 PRODUCTS

2.1 MANUFACTURERS

A. Acceptable Manufacturer: Western Red Cedar Lumber Association, which is located at: 1501 - 700 W. Pender St. Pender Place 1, Business Bldg. ; Vancouver, BC, Canada V6C 1G8; Toll Free Tel: 866-778-9096; Tel: 604-684-0266; Fax: 604-687-4930; Email: request info; Web: www.wrcla.org

B. Requests for substitutions will be considered in accordance with provisions of Section 01600.

C. Clear Cedar Tongue-and-Groove Siding: Western Red Cedar graded to meet NLGA "Grading Standards," paragraph 200. All exterior wood soffits to meet NFPA 703 & IBC 2006 requirements for “fire retardant treated wood”. All exterior wood to be labeled exterior and that it’s been fire treated.
   1. Grade: Clear Heart.
   2. Grade: A Clear and Better.
   3. Grade: A Clear and Better with a percentage of B Clear allowed.
      a. B Clear allowed: 15% percent.
   4. Pattern: V-grooved two sides (EV2S)WRCLA2.
   5. Pattern: Center matched tongue-and-groove.
   6. Texture: Smooth faced.

7. Moisture Content: Kiln-dried.
8. Finish: Factory primed.
9. Finish: Factory finished.

2.2 FASTENERS

A. Nails:
   1. Material: No. 304 stainless steel.
   2. Length: Must be sufficient to penetrate solid wood a minimum of 1 1/4"

2.3 PROTECTING FINISH

A. Water repellant, fungus and mildew resistant penetrating stain that is resistant to Ultra Violet (UV) light.
   1. Color: Translucent.

B. Follow guidelines of the Western Red Cedar Lumber Association.

C. Adhere to coating manufacturer's instructions.

PART 3 EXECUTION

3.1 PREPARATION

A. Coordinate work with related trades; scribe and cope siding boards for accurate fit. Allow installation of related work to avoid cutting and patching.

B. Select siding boards of longest possible lengths. Discard boards that are warped, twisted, bowed, crooked or otherwise defective.

3.2 INSTALLATION

A. Follow installation instructions specified in the Western Red Cedar Lumber Association's Installing Cedar Siding publication and DVD.

B. Installation must comply with local building codes and regulations.

C. Finish materials on all sides and ends. Apply touch up coating on new cuts. Factory primed or finishing is preferred.

3.3 ADJUSTING AND CLEANING

A. As work proceeds, maintain premises free of unnecessary accumulation of tools, equipment, surplus materials, and debris related to this work.

3.4 MAINTENANCE

A. Explain proper maintenance procedures to owner or owner's representative at project closeout.

B. Visually inspect siding, caulking, flashing annually for overall condition. Re-apply caulking and coating as necessary. Adjust flashing as required.

C. The use of pressure washers is not recommended.

END OF SECTION

SECTION 07 4800

RAINSCREEN ATTACHMENT SYSTEM (MFI)

PART-1 GENERAL

1.1 SUMMARY

A. Provide a thermally broken, rainscreen attachment system for attachment of exterior cladding installed over exterior mineral fiber insulation.

B. Related Sections:

1. Refer to Division 05 Section “Steel Stud Framing”.
2. [Refer to Division 06 Section “Rough Carpentry” for wood framing.”]
3. Refer to Division 06 Section “Sheathing”.
4. Refer to Division 07 Section “Air Barrier”
5. Refer to Division 07 Section “Composite Wood wall Panels” for wood wall panels.
6. Refer to Division 07 Section “Thermal Insulation” for exterior mineral fiber insulation.

1.2 SYSTEM DESCRIPTION

A. System assembly shall include the following components from the substrate out:

1. Substrate: Wall framing assembly and sheathing [Concrete masonry unit wall] [Concrete wall]
2. Weather Resistant/Air Barrier over substrate.
3. Mineral fiber insulation.
4. Thermally broken rainscreen attachment system.
5. Exterior cladding.

B. Design Requirements:

1. Manufacturer is responsible for designing system, including anchorage to structural system and necessary modifications to meet specified requirements and maintain visual design concepts.
2. Employ registered professional engineer, licensed to practice engineering in jurisdiction where Project is located, to engineer each component of rainscreen attachment system.
3. Structural Design: Exterior-insulated rainscreen wall assembly capable of withstanding effects of load and stresses from dead loads, wind loads, ice loads (if applicable) as indicated on Structural General Notes on Structural Drawings, and normal thermal movement without evidence of permanent defects of assemblies or components.
    a. Thermal Movements: Provide assemblies that allow for thermal movements resulting from the following maximum ambient temperatures by preventing overstressing of components and other detrimental effects:

1) Temperature Change (range): 120 degrees Fahrenheit (67 degrees C), ambient:

4. Support Framing/Attachment System:

a. Frequency and spacing of brackets as indicated by manufacture in project specific engineering package.

C. Performance Requirements:

1. Rainscreen Attachment System Performance: Comply with ANSI/ASHRAE 90.1-2010 maximum U-Value for walls.

2. Thermal Performance:

a. Wall Assembly effective R-Value (U-Factor): R-VALUE 13

b. Full constructed exterior assembly must have a minimum 90% EFFECTIVE R-value when compared to the exterior insulation's rated R-Value.

c. Continuous framing profiles (including C- or Z-shaped sections or furring) penetrating insulation not allowed.

d. Perform effective R-Value calculation or modeling in accordance with ASHRAE guidelines.

3. Structural Performance:

a. Framing Members:

1) Test framing components to AAMA TIR- A8-[04] – Section 7.2 to determine structural performance and effective moment of inertia for each perforated component. Minimum Effective Moment of Inertia for Primary Rail: 0.0134 in^4.

2) Localized bending stress for eccentrically loaded framing members must be evaluated with the maximum effective length of resisting element not more than 12 inches.

b. Fasteners:

1) Tension shall be taken as sum of direct tension plus tension due to prying for eccentrically loaded connections. Prying may be reduced or eliminated if proven via engineering analysis or testing.

2) Minimum Safety Factor of 3 for both tension and shear values.

3) Combined tension and shear shall be evaluated according to an interaction formula. Sum of terms shall not exceed 1.0.

1.3 SUBMITTALS

A. Product Data: Submit manufacturer's product literature and descriptions of testing performed on system components to indicate meeting or exceeding specified performance.

B. Shop Drawings:

1. Submit connection details to the cladding manufacturer, showing interface of rainscreen attachment system to substrate and panels with adjacent construction, signed and sealed by Professional Engineer.

2. Show system installation and attachment, including fastener size and spacing.

C. Structural Calculations:

1. Submit rainscreen attachment manufacturer's comprehensive Structural Design analysis signed and sealed by a Professional Engineer.

D. Samples: Submit following material samples for verification:

1. Wall Brackets: Two (2) samples.

2. Horizontal Rails: Two (2) 12-inch long samples.

E. Test Reports:

1. Test to the following standards and provide written test reports by a third party:

a. AAMA TIR-A8-[04]: Structural Performance of Composite Thermal Barrier Framing Systems – Section 7.2.

2. Comprehensive three-dimensional thermal modeling report indicating framing systems impact on exterior insulation rated R-value.

1.4 QUALITY ASSURANCE

A. Manufacturer Qualifications:

1. Minimum 5 years' experience specializing in the manufacturing of façade attachment/support framing similar to those specified.

2. Ability to demonstrate conformance to testing requirements.

B. Installer Qualifications:

1. Minimum of 3 years' documented experience or minimum of 5 completed projects of equivalent scope and quality and recommended by manufacturer to perform work of this Section.

2. Onsite superintendent or foreman overseeing installation on site during entire work of this Section with experience equivalent to installer and in good standing with the manufacturer.

C. Engineer Qualifications: Registered professional engineer experienced in the design of curtain wall systems, anchors, fasteners and licensed to practice engineering in the jurisdiction where Project is located.

D. Pre-Installation Meeting:

1. Discuss sequence and scheduling of work and interface with other trades.

2. Review metal wall framing assemblies for potential interference and conflicts and coordinate layout and support provisions for interfacing work.

3. Review and document methods, procedures and manufacturer's installation guidelines and safety procedures for exterior wall assembly.

E. Mock-Ups: Coordinate mock-up materials and requirements with mock-up specified in Division 01 [and exterior cladding specification].

1.5 QUALITY CONTROL

A. Single source responsibility:

1. Furnish engineered rainscreen attachment system components under direct responsibility of single manufacturer.

B. Field Measurements: Verify actual supporting and adjoining construction before fabrication.

C. Record field measurements on project record shop drawings.

D. Established Dimensions: Where field measurements cannot be made without delaying work, guarantee dimensions and proceed with fabrication of rainscreen attachment system corresponding to established dimensions.

1.6 DELIVERY, STORAGE AND HANDLING

A. Delivery: Deliver materials and components in manufacturers' original, unopened and undamaged containers or bundles, fully identified. Exercise care to avoid damage during unloading, storing and installation.

B. Store, protect and handle materials and components in accordance with manufacturer recommendations to prevent damage, contamination and deterioration. Keep materials clean, dry, and free of dirt and other foreign matter, and protect from damage due to weather or construction activities.

1.7 SEQUENCING

A. Ordering: Comply with manufacturers' ordering instructions and lead time requirements to avoid construction delays.

B. Coordinate construction to ensure that assemblies fit properly to supporting and adjoining construction; coordinate schedule with construction in progress to avoid delaying work.

1.8 WARRANTY

A. Manufacturer Warranties:

1. Attachment System: Ten (10) year Limited Warranty.

a. Covers components of the attachment system, including structural failure of components when all the materials and components are supplied and installed per manufacturer's requirements.

b. Includes labor and material for removal and replacement of defective material.

c. Includes labor to remove and reinstall façade finish panels, finish closures and façade finish accessories necessary to access defective material.

B. Contractor's Warranties: 2-year labor warranty, starting from [date of Owner acceptance of completed work] [Substantial Completion], to cover repair of materials found to be defective as a result of installation errors.

C. Limitation of Warranties: Exclude repairs, replacement, and corrective work to the substrate, primary structure, finish panels, and/or property – unless otherwise noted above. Warranties exclude mechanical damage due to abuse, neglect, primary structure failure, or forces of nature greater than normal weather conditions.

1.9 MAINTENANCE

A. Extra Materials: For use by Owner in building maintenance and repair, provide [a recommended percentage of] [3 percent] additional rainscreen attachment components in new, unopened cartons, packaged with protective covering for storage and identified with appropriate labels.

PART 2 - PRODUCTS

2.1 RAINSCREEN ATTACHMENT/SUPPORT FRAMING SYSTEM

A. Comply with ANSI/ASHRAE 90.1-2010.

B. Coating Material: ASTM A1046, Zinc-Aluminum-Magnesium, minimum thickness ZM40.

1. ASTM A653 Galvanized steel is not acceptable.

C. Steel Classification: Structural Steel (SS), Grade 50, 50 ksi Yield.

D. Spacing: Comply with manufacturer's Professional Engineer's project specific calculations.

E. Wall Brackets:

1. Minimum 0.074 inch thick (14 gauge) sheet steel.
2. Dimensions:
    a. Bracket Base: Minimum 3.125 inch high by 2.125 inch wide.
    b. Offset Brackets: 2- [3-] [3.5-] [4-] [5-] [6-] inch depth.
        1) Align offsets to differing wall planes as shown on Drawings.
3. Pre-Punched Holes: Two wall anchors per bracket.
4. Recommended Product: ThermaBracket-S by Knight Wall Systems or approved equal.

F. Primary Horizontal [Vertical] Rail, Static S-Series.

1. Minimum 0.046-inch thick (18 gauge) [0.054-inch thick (16 gauge)] cold-formed steel.
2. Profile: C channel, two flanges of equal length and one web.
3. Nominal Dimensions: Minimum 1.0 inch flange for attaching to wall bracket and 1.625 inch at web.
4. Pre-Punched Attachment Holes: 1.0 inch on center along length of track and oversized allowing for thermal contraction and expansion of rail without placing stress on brackets.
5. Recommended Product: S-Rail by Knight Wall Systems or approved equivalent.

G. Secondary Vertical [Horizontal] Rail: Nominal 0.046 inch thick (18 gauge) [0.054-inch thick (16 gauge)] cold-formed steel.

1. Profile: Hat channel with stiffening lips.
2. Profile Depth: 0.75 inches.
3. Girt Fastening Face: 2.0 inches [3.0 inches] [4.0 inches] [5.0 inches] [Manufacturer's recommendation as Engineered].
4. Weep Drains: 0.75 inches diameter at 4 inches on center along flanges to allow for free air flow laterally.
5. Attachment Holes: Locate at 2 inch on center along back to facilitate number 14 self-drilling self-tapping screw attachment to primary rail.
    a. Oversize holes to allow for thermal contraction and expansion of rail.

6. Basis of Design: PanelRail™ by Knight Wall Systems.

7. Or approved equal.

H. Reveal Rail: Nominal 0.046 inch thick (18 gauge) [0.054-inch thick (16 gauge)] cold-formed steel.

1. Profile: Square hat channel with stiffening lips.

2. Depth: 0.75 inches.

3. Dimensions: 2.0 inches at web, 1.625 inches at each flange with 0.25 stiffening lips.

4. Basis of Design: RevealRail™ by Knight Wall Systems or approved equivalent.

I. Thermal Isolation:

1. Material: Injection molded Polyoxymethylene copolymer (POM), non-fiber reinforced.

2. Tensile Yield Strength: 9.57 ksi per ISO 527.

3. Melting Temperature: 329 degrees Fahrenheit per ISO 3146.

4. Components:

a. Wall Anchor Isolation Washer: minimum 0.125 inch thick.

b. Support Wall Substrate Isolation: Minimum 0.375-inch thick at each wall bracket.

c. Rail to Bracket Isolation: Minimum 0.125 inch thick at each connection.

d. Bracket Shim: Match support wall substrate isolator profile; available in 0.125-inch thickness and does not decrease thermal or structural performance of system.

5. Basis of Design: ThermaStop™ Isolators by Knight Wall Systems.

6. Or approved equal.

J. Fasteners:

1. Sufficient length to provide solid attachment to structure as required by manufacturer.

2. Thermally isolated.

3. Framed substrate with sheathing: Self-drill hex-washer-head stainless steel with 1,000 hour salt-spray rated thermoset polyester coating.

a. Embedment depth: 0.625 inches or three full threads minimum, whichever is greater.

b. Minimum ultimate pull-out capacity from 18 gauge steel: 450 pounds.

4. Concrete and concrete masonry units substrate:

a. Embedment depth: 1.25 inches minimum.

b. Minimum ultimate pull-out capacity from substrate material: 450 pounds.

c. 1/4 inch Kwik-Con II+ by Hilti

d. 1/4 inch Tapcon by Buildex

e. 1/4 inch UltraCon by Elco Industries

f. Or approved equal.

5. For primary to secondary rail connection: Self-drill hex-washer-head stainless steel with 1,000 hour salt-spray rated thermoset polyester coating.

a. Embedment depth: 0.625 inches or three full threads minimum, whichever is greater.

b. Minimum ultimate pull-out capacity from 18 gauge steel: 450 pounds.

K. Accessories:

1. Bracing, Furring, Bridging, Plates, Gussets, and Clips: Formed sheet steel, thickness as necessary to meet structural requirements for special conditions encountered.

2. Galvanic Protection: Utilize tapes and other methods as necessary to separate and prevent contact between dissimilar metals.

2.2 MINERAL FIBER INSULATION

A. Refer to Section 07 21 00 – Thermal Insulation.

PART 3 - EXECUTION

3.1 EXAMINATION

A. Examine substrates and conditions for compliance with manufacturer requirements for installation conditions affecting performance of the work.

1. Do not proceed with installation until unsatisfactory conditions have been corrected.

2. Ensure weather-resistant barrier (WRB) is installed prior to installing rainscreen attachment system.

3. Ensure fenestration, transitions, discontinuities, sills, and ledgers are flashed and sealed to move moisture to the exterior of the building.

B. Field verify architectural details and mechanical and electrical requirements prior to commencing installation.

C. Commencement of installation constitutes acceptance of existing conditions and acceptance of responsibility for satisfactory performance.

3.2 RAINSCREEN ATTACHMENT SYSTEM INSTALLATION

A. Preparation: Review areas of potential interference and conflicts and coordinate layout and support provisions for interfacing work.

B. Installation: Install in strict accordance with manufacturer’s installation instructions.

C. Wall Brackets and Primary Rail:

1. Mount wall brackets at 16 [24] [32] inch on center horizontally [vertically] on support wall (at each stud location).

a. Brackets must be laid out at 0.5 inch increments vertically or horizontally.

b. Tighten screws to substructure to a snug tight condition and not stripped. Do not over-torque beyond manufacturer’s recommendation. If installed using hand tools, verify for each installer at beginning of project using snug-tight criteria. Do not use stripped holes.

2. Thermally isolate wall bracket attachments by sandwiching thermal break material between metal bracket and support wall substrate.

3. Thermally isolate screw fastener washers using material to thermally isolate fastener heads from metal bracket.

4. Mineral Fiber Insulation: Install to expand into and friction fit between wall brackets as specified by Section 072100 prior to installing horizontal rails.

5. Attach horizontal rail to wall bracket stem by use of a self-tapping screw fastener through the pre-punched holes in the rail and into the pre-punched pilot holes on the bracket.

6. Isolate horizontal rail from bracket by sandwiching a thermal break material between rail and bracket stem.

7. Attach horizontal rail at proper pre-punched pilot holes on bracket stem to align plumb and true. Account for irregularities in support wall.

8. Establish and re-establish and restart vertical bracket locations using laser or chalk-line at fenestrations and other obstructions to establish horizontal alignments.

D. Secondary Rail:

1. Space to make suitable bearing surfaces for each cladding system as instructed by manufacturer and as shown on Architect accepted shop drawings.

2. Begin at bottom and mount to horizontal rails using No. 14 self-drilling self-tapping stainless steel screws.

3. Tighten screws to snug tight. Verify equivalent snug tight condition for installers using hand tools.

4. Install successive vertical rails as required for panel type and engineering.

5. When encountering fenestrations and other openings, mount vertical rails so that fastening points are as close to the lower and upper edges as possible.

E. Touch-up shop-applied protective coatings damaged during handling and installation.

F. Use shearing instruments (i.e. snips, nibbler, etc.) for cutting metal framing components. Saws are not recommended, as the sparks produced during cutting will damage the anti-corrosion coating. If sparks are generated during cutting, be sure the portion of the component to be installed on the building is protected from sparks and that any stockpile near the cutting station is also protected.

G. The systems components should not be cut while installed on the building, unless using a shearing instrument.

H. Replace thermal isolator pieces that break during installation.

I. Provide a 3/8” – 1/2” gap between girts for expansion when multiple lengths of rail are installed.

J. Minimum length of installed cut primary rail is 12” and must be attached to at least two separate wall brackets to prevent rotation of rail. Unsupported cantilever must not exceed 6” unless specified differently by manufacturer’s engineer.

K. Minimum length of installed cut secondary rail is 12” and must be mechanically attached to at least two separate primary rails.

3.3 ERECTION TOLERANCES

A. Maximum Framing Member Variation from True Position: 1/4 inch.

B. Maximum Framing Member Variation from Plane:

1. Individual Framing Members: Do not exceed 1/4 inch in 10 foot.

2. Accumulative Over-all Variation for Wall and Floor System: Do not exceed 1/4 inch.

3.4 FIELD QUALITY CONTROL

A. Manufacturer's Field Technical Service: Make intermittent and final inspection to verify installation in conformance to manufacturer instructions and suitable as framing assembly for subsequent metal panels, acrylic plastering, and other cladding installations.

1. Confirm snug tight and fastener sizing.

2. Confirm framing members installed in correct orientation.

3.5 ADJUSTING

A. Inspect and adjust after installation. Replace or repair defective work.

B. Adjust, and reconfigure as necessary to accommodate cladding systems for installations over work of this Section. Do not reuse pre-drilled holes unless fastener size is increased.

3.6 SIDING/CLADDING PANEL INSTALLATION –

A. The cavity must be clear and free from air flow and drainage obstructions.

END OF SECTION

SECTION 07 5013

SINGLE-PLY MEMBRANE ROOFING

PART 1 - GENERAL

1.1 SUMMARY

A. Section Includes: Single-ply membrane roofing system and supplementary items necessary for installation.

1.2 ALLOWANCES

A. Concrete Moisture Barrier Allowance: Include allowance to provide Concrete Moisture Barrier at concrete roof deck.

1. If Concrete Moisture Barrier is provided, verify Vapor Retarder requirements with roofing system manufacturer.

1.3 DEFINITIONS

A. Roofing Terminology: Refer to ASTM D 1079 and glossary of NRCA's "The NRCA Roofing and Waterproofing Manual" for definition of terms related to roofing work in this Section.

B. Roof Edge Regions: The following definitions from ANSI/SPRI ES-1 shall be applicable to this project:

1. Roof Corner Region: Based on the following:

a. For buildings with mean roof height of 60 ft (18 m) or less, the corner region is a distance from the building corner that is 10 percent of the minimum building width or 40 percent of the building height at the eaves, whichever is smaller, but not less than 4 percent of minimum building width and not less than 3 ft (0.9 m).
b. For buildings with mean roof height greater than 60 ft (18 m), the corner region is a distance from the building corner that is 10 percent of the minimum building width but not less than 3 ft (0.9 m).

2. Roof Perimeter: The section of the roof edge between corner regions as defined above. The edge condition includes the roof edge device (edge flashing or coping) and the nailers or other substrate to edge device is attached.

C. TPO: Thermoplastic polyolefin.

1.4 ACTION SUBMITTALS

A. Product Data: Manufacturer's technical literature for each product and system indicated.

1. Include manufacturer's specifications for materials, finishes, construction details, installation instructions, and recommendations for maintenance.

B. Shop Drawings: Show details of fabrication and installation, including plans, elevations, sections, details of components and attachments to other work. Distinguish between shop and field-assembled work.

1. Show base flashings and membrane terminations.
2. Show flat and sloped tapered insulation, including slopes.
3. Show crickets and saddles, including slopes.
4. Show roof plan showing orientation of membrane roofing and fastener spacing.
5. Show insulation fastening patterns for corner, perimeter, and field-of-roof locations.
6. Show cold-applied adhesive pattern for insulation installation; typical pattern of a 100 square foot area.
7. Include project specific details for typical and non-typical conditions.

C. Samples for Verification Purposes: For the following products:

1. Roofing membrane, 12 in by 12 in (300 mm by 300 mm) square, of color specified, including side and end lap seam.
2. Flashing sheets.
3. Vapor retarder, 12 in by 12 in (300 mm by 300 mm) square.
4. Roof insulation.
5. Walkway pads.
6. Termination bars.
7. Fasteners of each type, length, and finish.

1.5 INFORMATIONAL SUBMITTALS

A. Manufacturer's Project Acceptance Document: Certification by the manufacturer that its product(s) are approved, acceptable, suitable for use in specific locations, for specific details, and for applications indicated, specified, or required, and that a warranty will be issued.

1. Roofing manufacturer shall review and approve Shop Drawings in writing prior to submission.

B. Product Test Reports: Written reports based on evaluation of comprehensive tests performed by qualified testing agency indicating that each product complies with requirements.

C. Field Quality Control Reports: Written report of testing and inspection required by "Field Quality Control".

D. Concrete Roof Deck - Moisture Content Measurement: Submit recorded readings when requested.

1. Submit moisture content readings to roofing manufacturer.

E. Substrate Surface Temperature Readings at Cold Fluid-Applied Insulation Adhesive: Submit recorded readings.

1. Submit surface temperature readings to roofing manufacturer.

F. Manufacturer's Project Acceptance Document: Certification by the manufacturer that its product(s) are approved, acceptable, suitable for use in specific locations, for specific details, and for applications indicated, specified, or required, and that a warranty will be issued.

1. Roofing manufacturer shall review and approve Shop Drawings in writing prior to submission.

G. Qualification Data:

1. For firms and persons specified in "Quality Assurance" to demonstrate their capabilities and experience. Include list of completed projects.

H. Warranty: Sample of warranty.

1. Provide manufacturer's written warranty covering materials and installation (labor) stating obligations, remedies, limitations and exclusions.

1.6 CLOSEOUT SUBMITTALS

A. Maintenance Data: To include in maintenance manuals.

1.7 QUALITY ASSURANCE

A. Manufacturer Qualifications: Manufacturer with not less than 10 years of experience in the successful production and in-service performance of products and systems similar to scope of this Project.

B. Installer Qualifications:

1. Experience: Installer's personnel with not less than 5 years of experience in the successful performance of Work similar to scope of this Project.
2. Supervision: Installer shall maintain a competent supervisor at Project while the Work is in progress, and who has not less than 5 years of experience installing products and systems similar to scope of this Project.
3. Manufacturer Acceptance: Installer shall be certified, approved, licensed or acceptable to manufacturer to install products.

C. Insurance Certification: Assist Owner in preparing and submitting roof installation acceptance certification as necessary in connection with fire and extended-coverage insurance on roofing and associated work.

D. Quality Standards:

1. Unless otherwise recommended by roofing manufacturer, provide roofing system in accordance with recommendations of the NRCA "Roofing and Waterproofing Manual" for roofing type indicated.
2. Comply with FMG System Loss Prevention Data Sheet 1-49 for attachment and anchorage of nailers, blocking, and other associated members for applicable wind zone for Project.
3. Comply with FMG System Loss Prevention Data Standards 1-28 and 1-28S for attachment and anchorage of roof insulation to metal decking.

E. Fire-Test-Response Characteristics: Provide roofing system materials with the fire-test-response characteristics indicated as determined by testing identical products per test method below by UL, FMG, or another testing and inspecting agency acceptable to authorities having jurisdiction. Materials shall be identified with appropriate markings of applicable testing and inspecting agency.

1. Exterior Fire-Test Exposure: ASTM E 108, Class A, for application and roof slopes indicated.
2. Fire-Resistance Ratings: ASTM E 119, for fire-resistance-rated roof assemblies of which roofing system is a part.

1.8 PRE-INSTALLATION CONFERENCE

A. Pre-Installation Conference: Before Work begins, conduct conference at Project site to comply with requirements of applicable Division 01 Sections.

1. Participants:

   a. Architect.
   b. Contractor, including superintendent.
   c. Installer, including project manager and supervisor (superintendent).
   d. If requested, Manufacturer's qualified technical representative.
   e. Installers of other construction interfaced with Work.

2. Minimum Agenda: Installer shall demonstrate understanding of the Work required by describing detailed procedures for preparing, installing, and cleaning the Work. Demonstration shall include, but not be limited to, following topics:

   a. Tour representative areas of Work, inspect and discuss condition of substrate, and other preparatory work performed by other trades.
   b. Review Contract Document requirements.
   c. Review approved submittals.
   d. Review inspection and testing requirements.
   e. Review environmental conditions and procedures for coping with unfavorable conditions.
   f. Resolve deviations or differences between Contract Documents and the manufacturer’s specifications.
   g. Review deck substrate requirements for conditions and finishes, including flatness, presence of moisture, and fastening.
   h. Review base flashings, special roofing details, roof drainage, roof penetrations, equipment curbs, and condition of other construction that affects roofing system.
   i. Review governing regulations and requirements for insurance and certificates if applicable.
   j. Review temporary protection requirements for roofing during and after installation.
   k. Review roof observation and repair procedures after roofing installation.

3. Record discussions, including decisions and agreements, and prepare report.

1.9 DELIVERY, STORAGE, AND HANDLING

A. Deliver roofing materials to Project site in original containers with seals unbroken and labeled with manufacturer's name, product brand name and type, date of manufacture, approval or listing agency markings, and directions for storing and mixing with other components.

B. Store materials in their original undamaged containers in a clean, dry, protected location and within the temperature range required by roofing system manufacturer. Protect stored material from direct sunlight.

1. Discard and legally dispose of liquid material that cannot be applied within its stated shelf life.

C. Protect roof insulation materials from physical damage and from deterioration by sunlight, moisture, soiling, and other sources. Store in a dry location. Comply with insulation manufacturer's written instructions for handling, storing, and protecting during installation.

D. Handle and store roofing materials and place equipment in a manner to avoid permanent deflection of deck.

1.10 PROJECT CONDITIONS

A. Weather Limitations: Proceed with installation only when existing and forecasted weather conditions permit roofing system to be installed according to manufacturer's written instructions and warranty requirements.

1.11 COORDINATION

A. Coordinate installation of products and systems with interfacing and adjoining construction to provide a successful installation without failure.

1.12 WARRANTY

A. Manufacturer's Warranty: Furnish manufacturer's written "Total Roofing System" warranty signed by an authorized representative using manufacturer's standard form, without monetary limitation (NDL), agreeing to repair or replace components of roofing system which exhibit defects in materials or workmanship within specified warranty period. "Defects" is defined to include, but not limited to, deterioration or failure to perform as required.

1. Warranty includes roofing, flashings, adhesives, sealants, insulation, fastener systems, cover board, substrate board, and other components of roofing system.
2. Warranty includes roof edge flashings integral with roofing system as specified in Division 07 Section "Flashing and Sheet Metal".
3. Warranty Period: Manufacturer shall warrant the products to be free from material and labor Defects for a period of 20 years from date of Substantial Completion.

B. Installer's Warranty: Furnish installer's written warranty signed by an authorized representative using installer's standard form agreeing to repair or replace components of roofing system which exhibit defects in materials or workmanship within specified warranty period. "Defects" is defined to include, but not limited to, deterioration or failure to perform as required.

1. Warranty includes roofing, flashings, counterflashings, adhesives, sealants, insulation, fastener systems, cover boards, substrate board, roofing accessories, and other components of roofing system.
2. Warranty includes roof edge flashings integral with roofing system as specified in Division 07 Section "Flashing and Sheet Metal".
3. Warranty Period: Installer shall warrant the installation to be free from workmanship Defects for a period of 2 years from date of Substantial Completion.

PART 2 - PRODUCTS

2.1 MANUFACTURERS AND PRODUCTS

A. Acceptable Manufacturers and Products: Subject to compliance with requirements of Contract Documents as judged by the Architect, provide product by one of manufacturers listed. If not listed, submit as substitution according to the Conditions of the Contract and Division 01 Section "Substitution Procedures".

B. Basis of Design (Product Standard): Contract Documents are based on products and systems specified to establish a standard of quality. Other available manufacturers offering products having equivalent characteristics may be considered, provided deviations are minor and comply with requirements of Contract Documents as judged by the Architect.

2.2 MATERIALS, GENERAL

A. Single Source Responsibility: Furnish each type of product from single manufacturer. Provide secondary materials only as recommended by manufacturer of primary materials.

2.3 PERFORMANCE REQUIREMENTS

A. General Performance: Installed roofing system and base flashings shall withstand specified uplift pressures, thermally induced movement, and exposure to weather without failure due to defective manufacture, fabrication, installation, or other defects in construction. Roofing system and base flashings shall remain watertight.

B. Design Loads: Installed roofing system and base flashings shall withstand design loads including, but not limited to, requirements established by authorities having jurisdiction, applicable local building codes, and as indicated. Contractor shall obtain required design data and identify requirements accommodated on submittal drawings.

C. Material Compatibility: Provide roofing system materials that are compatible with one another under conditions of service and application required, as demonstrated by roofing system manufacturer based on testing and field experience.

D. Edge Systems Design: Provide edge systems that have been successfully tested by a qualified testing and inspecting agency to resist uplift pressure calculated according to SPRI's "Wind Design Standard for Edge Systems Used with Low Slope Roofing Systems" ES-1.

E. Roofing System Design: Provide roofing systems that have been successfully tested by a qualified testing and inspecting agency to resist uplift pressure and external fire exposure.

F. FMG Listing: Provide roofing system, base flashings, and component materials that comply with requirements in FMG 4450 and FMG 4470 as part of a roofing system and that are listed in FMG Approvals' "RoofNav" for Class 1 or noncombustible construction, as applicable. Identify materials with FMG Approvals markings.

1. Fire/Windstorm Classification at Roof Corner and Perimeter Region: Class 1A-150.
2. Fire/Windstorm Classification at Field of Roof: Class 1A-90.

G. Energy Performance for Low Slope Roofs: Provide roofing system with initial Solar Reflectance Index not less than 78 when calculated according to ASTM E 1980 based on testing identical products by a qualified testing agency.

2.4 SINGLE-PLY MEMBRANE ROOFING SYSTEM MATERIALS

A. TPO Membrane Roofing System: ASTM D 6878, internally fabric or scrim reinforced, uniform, flexible TPO sheet.

1. Thickness: 60 mils (1.5 mm), nominal.
2. Exposed Face Color: White.
3. Exposed Face Color: As selected by Architect from manufacturer's standard colors.
4. Manufacturers and Products:

    a. Carlisle SynTec Inc.; Sure-Weld TPO.
    b. Firestone Building Products Co.; UltraPly TPO.
    c. Johns Manville, Inc.; JM TPO.

    d. Carlisle SynTec Inc.; Sure-Weld FleeceBACK (FB) TPO.

2.5 SINGLE-PLY MEMBRANE ROOFING SYSTEM AUXILIARY MATERIALS

A. General: Auxiliary materials recommended by roofing system manufacturer for intended use and compatible with roofing membrane. Liquid-type auxiliary materials shall meet VOC limits of authorities having jurisdiction.

B. Sheet Flashing: Manufacturer's standard sheet flashing membrane, of recommended thickness and compatible with roofing membrane, of same color as roofing membrane, and appropriate for Project roofing application.

C. Coated Metal Flashing: Manufacturer's standard coated galvanized sheet metal (G90) flashing, minimum 24 gage, of same color as roofing membrane.

D. Pipe / Stack Flashing: Pre-molded flexible membrane pipe collar with aluminum ring bonded to base as recommended by roofing system manufacturer.

E. Bonding Adhesive: Manufacturer's standard bonding adhesive.

F. Water Cutoff Mastic: Manufacturer's standard butyl mastic sealant.

G. Termination Bars: ASTM A 666, Type 304 formed stainless steel or extruded alloy 6063 aluminum bars; 2 types, one flat and one flat with upper flange shaped to receive sealant, locations as indicated; 1 in by 1/8 in (25 mm by 3 mm) thick; predrilled at 8 in (200 mm) centers; with corrosive resistant fasteners. No plastic bars allowed.

H. Miscellaneous Accessories: Provide pourable sealers, preformed inside and outside corner sheet flashings, in-seam sealants, termination reglets, cover strips, and other accessories.

1. All fasteners, anchors, nails, straps, bars and other concrete or wood fasteners shall be stainless steel.

I. Seaming Material: Manufacturer's standard splicing adhesive and splice cleaner or primer and splice tape with release film.

J. Lap Sealant: Manufacturer's standard single-component sealant, color to match roofing membrane.

K. Sealant Pockets (aka Ptich Pans) at Roof Penetrations: Sealant pockets (aka pitch pans) at roofing penetrations are not allowed and will be considered non-conforming work. Refer to drawings for allowable penetration details.

2.6 CONCRETE MOISTURE BARRIER

A. Concrete Moisture Barrier Treatment: Products and systems formulated to reduce moisture vapor transmission and surface alkalinity from concrete substrates prior to installation of roofing materials. Concrete moisture barrier shall be recommended and approved in writing by roofing system manufacturer.

2.7 SUBSTRATE BOARDS FOR FIRE RESISTANCE

A. Substrate Boards for Fire-Resistance: Select one of the following:

1. Gypsum Substrate Board: ASTM C 1396 / C 1396M, Type X, gypsum board with water-resistant-treated core and with water-repellent paper bonded to core's face, back, and long edges, 5/8 in (15 mm) thick.
2. Glass-Faced Exterior Substrate Board: ASTM C 1177 / C 1177M, Type X, glass-mat, water–Óresistant exterior gypsum sheathing board specifically manufactured for use beneath roofing systems, 5/8 in (15 mm) thick.

    a. Manufacturers and Products:

        1) Georgia-Pacific Gypsum LLC; DensDeck FireGuard Prime.

3. Exterior Gypsum Substrate Board: ASTM C 1278 / C 1278M, Type X, exterior gypsum sheathing board specifically manufactured for use beneath roofing systems. Non-combustible, cellulosic-fiber-reinforced, moisture-resistant gypsum core, 5/8 in (15 mm) thick.

    a. Manufacturers and Products:

        1) USG; SECUROCK Gypsum-Fiber Roof Board.

2.8 VAPOR RETARDER

A. Vapor Retarder: 40 mil composite self-adhesive vapor barrier composed of SBS modified bitumen and laminated film.

1. Basis of Design: Carlisle Syntec Systems; 725TR Air and Vapor Barrier/Temporary Roof.
2. Basis of Design: Sika Sarnafil; Sarnavap 32 self Ahdered.
3. Basis of Design: As recommended by sheet membrane roofing system manufacturer.

B. Vapor Retarder Substrate Board: Same product as roof cover board, 1/2 in (12 mm) thickness, specified elsewhere in this Section.

2.9 ROOF INSULATION AND ACCESSORIES

A. Insulation Board at Lightweight Insulating Concrete Substrate: Refer to Division 03 Section "Lightweight Insulating Concrete" for insulation board embedded in concrete slurry.

B. General: Provide preformed roof insulation boards that comply with requirements of referenced standards, selected from manufacturer's standard sizes and of thicknesses. Provide accessories recommended by insulation manufacturer for intended use and compatible with roofing membrane.

1. Provide insulation thickness required to maintain minimum aged R-value as indicated on the Drawings.
2. Insulation board thickness of individual insulation layers to be 2 in (50 mm) maximum.
3. Insulation board size to be 4 ft by 4 ft (1.22 m by 1.22 m) maximum.
4. Provide factory, tapered insulation boards where indicated for sloping to drain. Fabricate with 1/4 in (6 mm) per 12 in (300 mm) (1:48) taper, unless otherwise indicated.
5. Provide preformed saddles, crickets, tapered edge strips, and other insulation shapes where indicated for sloping to drain. Fabricate to slopes indicated.

C. Polyisocyanurate Board Insulation: Rigid, cellular polyisocyanurate thermal insulation with core formed by using HCFCs as blowing agents to comply with ASTM C 1289, Type II, Class 2, Grade 2, (20 psi compressive strength, product shall have glass-fiber mat on both major surfaces.

D. Cold Fluid-Applied Insulation Adhesive: Insulation manufacturer's recommended adhesive formulated to attach roof insulation to substrate or to another insulation layer as follows:

1. Bead-applied, low-rise, two-component urethane adhesive.

    a. Basis of Design (Product Standard): OMG Inc.; Olybond 500.

E. Fasteners: Factory-coated steel fasteners and metal or plastic plates meeting corrosion-resistance provisions in FMG 4470, designed for fastening roof insulation to substrate, and acceptable to roofing system manufacturer.

F. Treated Wood Nailers: As specified in Division 06 Section "Miscellaneous Rough Carpentry".

2.10 ROOF ACCESSORIES

A. Treated Wood Nailers: As specified in Division 06 Section "Miscellaneous Rough Carpentry".

2.11 ROOF COVER BOARDS

A. Horizontal Roof Cover Boards: Glass-Mat Faced Exterior Gypsum Sheathing Board.

1. Material Quality Standard: ASTM C 1177 / C 1177M.
2. Description: Glass-mat faced exterior gypsum sheathing board specifically manufactured for use beneath roofing systems. Non-combustible moisture-resistant gypsum core with glass-mat facings. Provide in maximum lengths and widths available that will minimize short-edge-to-short-edge butt joints and to correspond to support system indicated.
3. Manufacturers and Products:

    a. Georgia-Pacific Gypsum LLC; DensDeck Prime.

4. Thickness: Minimum 1/4 in (6 mm); or as required to meet performance requirements.

B. Horizontal Roof Cover Boards: Exterior Gypsum Sheathing Board.

1. Material Quality Standard: ASTM C 1278 / C 1278M.
2. Description: Exterior gypsum sheathing board specifically manufactured for use beneath roofing systems. Non-combustible, cellulosic-fiber-reinforced, moisture-resistant gypsum core. Provide in maximum lengths and widths available that will minimize short-edge-to-short-edge butt joints and to correspond to support system indicated.
3. Manufacturers and Products:

    a. USG; SECUROCK Gypsum-Fiber Roof Board.

4. Thickness: Minimum 1/4 in (6 mm); or as required to meet performance requirements.

C. Vertical Cover Boards (Back of Parapet): As specified in Division 06 Section "Exterior Gypsum Sheathing".

2.12 FLEXIBLE WALKWAYS

A. Flexible Walkways: Factory-formed, nonporous, heavy-duty, solid-rubber, slip-resisting, surface-textured walkway pads or rolls, approximately 3/16 in (5 mm) thick, as recommended by roofing system manufacturer.

2.13 FLASHING AND SHEET METAL

A. Flashing and Sheet Metal: Refer to Division 07 Section "Sheet Metal Flashing and Trim".

PART 3 - EXECUTION

3.1 EXAMINATION

A. Acceptance of Surfaces and Conditions: Examine substrates to receive products and systems and associated work for compliance with requirements and other conditions affecting performance. Proceed only when unsatisfactory conditions, including concrete moisture content, have been corrected in a manner complying with roofing manufacturer recommendations and Contract Documents. Starting work within a particular area will be construed as acceptance of surface conditions.

1. Verify that roof openings and penetrations are in place and set and braced and that roof drains are securely clamped in place.

2. Verify that wood blocking, curbs, and nailers are securely anchored to roof deck at penetrations and terminations and that nailers match thickness of insulation.
3. Metal Decking Substrates:

    a. Verify that surface plane flatness and fastening of steel roof deck complies with requirements in Division 05 Section "Steel Roof Decking".

4. At cast-in-place concrete or composite metal deck substrates:

    a. Verify that minimum concrete drying period recommended by roofing system manufacturer has passed.
    b. Concrete Moisture Testing: Perform one or both of the following tests as recommended by roofing manufacturer. Proceed with installation only after concrete substrates pass testing.

        1) Relative Humidity Test: As recommended by NRCA, perform moisture test using in situ probes in accordance with ASTM F 2170. Concrete to be drilled and probes inserted for minimum of 48 hours. Proceed with installation only after concrete substrates have a maximum 75 percent relative humidity level measurement or at a level as recommended by roofing manufacturer. Perform 3 moisture tests for first 1000 sf (92.9 sm) of concrete substrate scheduled to receive roofing and 1 test for each additional 1000 sf (92.9 sm) or fraction thereof.
        2) Manufacturer'¢s Concrete Moisture Test: Roofing manufacturer'¢s standard moisture test with measurements or results acceptable to roofing manufacturer.

    c. Concrete Moisture Barrier: For concrete substrates not meeting moisture test standards specified above, install concrete moisture barrier to concrete substrate in accordance with manufacturer's written instructions.
    d. Verify that concrete curing compounds that will impair adhesion of roofing components to roof deck have been removed.

B. Substrate Surface Temperature at Cold Fluid-Applied Insulation Adhesive: Confirm that concrete substrate or substrate board surface temperature is a minimum 50 deg F (10 deg C) prior to application of adhesive.

3.2 INSTALLATION, GENERAL

A. Installation Quality Standards: In addition to standards listed elsewhere, perform Work according to following, unless otherwise specified:

1. Respective manufacturer's written installation instructions.
2. Accepted submittals.
3. Contract Documents.

B. Control of Corrosion: Prevent galvanic action and other forms of corrosion by isolating metals and other materials from direct contact with incompatible materials.

3.3 PREPARATION

A. General: Comply with manufacturer's instructions, recommendations, and specifications for cleaning and surface preparation. Surfaces shall have no defects, contaminants, or errors which would result in poor or potentially defective installation or would cause latent defects in Work.

B. Clean substrate of dust, debris, moisture, and other substances detrimental to roofing installation according to roofing system manufacturer's written instructions. Remove sharp projections.

C. Prevent materials from entering and clogging roof drains and conductors and from spilling or migrating onto surfaces of other construction. Remove roof-drain plugs when no work is taking place or when rain is forecast.

D. Complete terminations and base flashings and provide temporary seals to prevent water from entering completed sections of roofing system at the end of the workday or when rain is forecast. Remove and discard temporary seals before beginning work on adjoining roofing.

3.4 SUBSTRATE BOARDS FOR FIRE RESISTANCE - INSTALLATION

A. Install substrate boards with long joints in continuous straight lines, perpendicular to roof slopes with end joints staggered between rows. Tightly butt substrate boards together.

1. Fasten substrate boards to top flanges of steel deck according to recommendations in FMG Approvals' "RoofNav" and FM Global Loss Prevention Data Sheet 1-29 for specified Windstorm Resistance Classification.

3.5 VAPOR RETARDER INSTALLATION

A. Vapor Retarder Substrate Board: Install substrate board with long joints in continuous straight lines, perpendicular to roof slopes with end joints staggered between rows. Tightly butt substrate boards together.

1. Fasten substrate boards to top flanges of steel deck according to recommendations in FMG Approvals' "RoofNav" and FM Global Loss Prevention Data Sheet 1-29 for specified Windstorm Resistance Classification.

B. Vapor Retarder: Install according to roofing system manufacturer's written instructions.

C. Completely seal vapor retarder at terminations, obstructions, and penetrations to prevent air movement into single-ply roofing.

3.6 INSULATION INSTALLATION

A. General: Comply with FMG and roofing system manufacturer's written instructions for installing roof insulation. Secure insulation according to requirements in FMG's "Approval Guide" for specified Windstorm Resistance Classification.

B. Coordinate installing roofing system components so insulation is not exposed to precipitation or left exposed at the end of the workday.

C. Install tapered insulation under area of roofing to conform to slopes indicated.

D. Install one or more layers of insulation under area of roofing to achieve required thickness. Where overall insulation thickness is 2 in (50 mm) or greater, install 2 or more layers with joints of each succeeding layer staggered from joints of previous layer a minimum of 6 in (150 mm) in each direction.

E. Trim surface of insulation where necessary at roof drains so completed surface is flush and does not restrict flow of water.

F. Install insulation with long joints of insulation in a continuous straight line with end joints staggered between rows, abutting edges and ends between boards. Fill gaps exceeding 1/4 in (6 mm) with insulation. Cut and fit insulation within 1/4 in (6 mm) of nailers, projections, and penetrations.

G. Cast-in-Place Concrete or Composite Metal Deck Substrate:

1. Install and adhere base layer of insulation to substrate in a layer of cold fluid-applied adhesive.
2. Install subsequent layers of insulation in a layer of cold fluid-applied adhesive.

H. Steel Roof Deck Substrate: Provide the following method according to performance criteria requirements for specified Windstorm Resistance Classification:

1. Mechanically Fastened and Adhered Insulation: Install base layer of insulation and secure to deck using mechanical fasteners specifically designed and sized for fastening specified board-type roof insulation to deck type. Install subsequent layers of insulation in a layer of cold fluid-applied adhesive.

I. Substrate Board Substrate: Install and adhere base layer of insulation to substrate board in a layer of cold fluid-applied adhesive. Install subsequent layers of insulation in a layer of cold fluid-applied adhesive.

3.7 ROOF COVER BOARDS INSTALLATION

A. General: Comply with FMG and roofing system manufacturer's written instructions for installing roof cover boards. Secure roof cover boards to insulation substrate according to requirements in FMG's "Approval Guide" for specified Windstorm Resistance Classification.

B. Install roof cover boards over insulation with long joints in continuous straight lines with end joints staggered between rows. Offset joints of insulation below a minimum of 6 in (150 mm) in each direction. Loosely butt roof cover boards together.

1. Provide following fastening method according to performance criteria requirements for specified Windstorm Resistance Classification:

a. Adhere roof cover boards to insulation substrate in a layer of cold fluid-applied adhesive.

1) Score boards, if necessary, to conform to substrate irregularities. Comply with manufacturer's installation recommendations to insure proper adhesion and adhesive set.

C. Secure roof cover boards to insulation to resist uplift pressure at corners, perimeter, and field of roof according to membrane roofing system manufacturer's written instructions.

3.8 SINGLE-PLY MEMBRANE ROOFING SYSTEM INSTALLATION; GENERAL REQUIREMENTS

A. Install roofing membrane according to roofing system manufacturer's written instructions. Unroll roofing membrane and allow it to relax before installing.

B. Start installation of roofing membrane in presence of roofing system manufacturer's technical personnel.

C. Cooperate with testing and inspecting agencies engaged or required to perform services for installing roofing system.

D. Coordinate installation of roofing system so insulation and other components of roofing system not intended for permanent exposure are not subjected to extreme heat, precipitation, or left uncovered at the end of the workday or when inclement weather is forecast.

1. Provide tie-offs at end of each day's work to cover exposed roofing membrane sheets and insulation with a temporary protection layer set in roofing adhesive with joints and edges sealed.
2. Complete terminations and base flashings and provide temporary seals to prevent water from entering completed sections of roofing system.
3. Remove and discard temporary seals before beginning work on adjoining roofing.

E. Accurately align roofing membrane and maintain uniform side and end laps of minimum dimensions required by roofing system manufacturer. Stagger end laps. Apply roofing membrane with side laps shingled with slope of roof deck.

F. Securely attach and tie-in roofing membrane at roof drains and piping / stack flashings in accordance with roofing system manufacturer's written instructions.

3.9 FULLY ADHERED SINGLE-PLY MEMBRANE ROOFING INSTALLATION

A. Adhere sheet membrane over area to receive roofing and install according to roofing system manufacturer's written instructions.

1. Ensure membrane is continuously adhered to substrate without voids, holidays, and unbonded membrane.

B. Adhere roofing membrane at terminations, penetrations, corners, and perimeter of roofing.

C. Seams:

1. TPO Applications: Clean seam areas, overlap roofing membrane, and heat weld side and end laps of roofing membrane according to manufacturer's written instructions to ensure a watertight seam installation.

a. Test lap edges with probe to verify seam weld continuity. Apply lap sealant to seal cut edges of roofing membrane.

b. Verify field strength of seams a minimum of twice daily and repair seam sample areas.
c. Repair tears, voids, and lapped seams in roofing membrane that does not meet requirements.

3.10 BASE FLASHING INSTALLATION

A. Install sheet flashings and preformed flashing accessories and adhere to substrates according to roofing system manufacturer's written instructions.

B. Apply bonding adhesive to substrate and underside of sheet flashing at required rate and allow to partially dry. Do not apply bonding adhesive to seam area of flashing.

C. Seams:

~~1. PVC Applications: Clean seam areas and overlap and firmly roll sheet flashings into the adhesive. Heat weld side and end laps to ensure a watertight seam installation.~~
2. TPO Applications: Clean seam areas and overlap and firmly roll sheet flashings into the adhesive. Heat weld side and end laps to ensure a watertight seam installation.
~~3. EPDM Applications: Clean splice areas, apply splicing cement, and firmly roll side and end laps of overlapping sheets to ensure a watertight seam installation. Apply lap sealant and seal exposed edges of sheet flashing terminations.~~

~~a. Flash penetrations and field-formed inside and outside corners with cured or uncured EPDM sheet flashing.~~

~~4. KEE Applications: Clean seam areas and overlap and firmly roll sheet flashings into the adhesive. Heat weld side and end laps to ensure a watertight seam installation.~~

D. Terminate and seal top of sheet flashings and mechanically anchor to substrate through termination bars.

3.11 WALKWAY INSTALLATION

A. Flexible Walkways: Install flexible walkway products at locations indicated. Heat weld to substrate or adhere walkway products to substrate with compatible adhesive according to roofing system manufacturer's written instructions.

3.12 FIELD QUALITY CONTROL

A. Manufacturer's Field Service: Manufacturer's qualified technical representative shall periodically inspect Work to ensure installation is proceeding in accordance with manufacturer's designs, recommendations, instructions and warranty requirements. Representative shall submit written reports of each visit indicating observations, findings, and conclusions of inspection.

1. Manufacturer's Technical Representative Qualifications: Direct employee of technical services department of manufacturer with experience in providing recommendations, observations, evaluations, and problem diagnostics.

B. Cold Fluid-Applied Insulation Adhesive Manufacturer's Inspection: Manufacturer's qualified technical representative shall periodically inspect Work to ensure installation is proceeding in accordance with manufacturer's designs, recommendations, instructions and warranty requirements. Representative shall submit written reports of each visit indicating observations, findings, and conclusions of inspection.

1. Test Cuts: The cold fluid-applied insulation adhesive manufacturer shall perform field quality control test cuts of the cold fluid-applied insulation adhesive installation.

C. Testing Agency: The Owner may employ and pay a qualified independent testing agency to perform field quality control, including infrared inspections on installed roof assemblies. Materials and installation failing to meet specified requirements shall be replaced at Contractor's expense. Retesting of materials and installations failing to meet specified requirements shall be done at Contractor's expense.

1. Infrared Inspection: Where infrared survey indicates moisture intrusion, wet insulation and damaged or deficient materials or construction shall be replaced in a manner to provide watertight and specified wind uplift resistant construction, and maintain the roof system warranty.

3.13 REPAIR, CLEANING, AND PROTECTION

A. Protect roofing system from damage and wear during remainder of construction period. When remaining construction will not affect or endanger roofing, inspect roofing for deterioration and damage, describing its nature and extent in a written report, with copies to Architect and Owner.

B. Correct deficiencies in or remove roofing system that does not comply with requirements, repair substrates and repair or reinstall roofing system to a condition free of damage and deterioration at time of Substantial Completion and according to warranty requirements.

C. Clean overspray and spillage from adjacent construction using cleaning agents and procedures recommended by manufacturer of affected construction.

END OF SECTION

SECTION 07 5216

MODIFIED BITUMINOUS MEMBRANE ROOFING

PART 1 - GENERAL

1.1 SUMMARY

A. Section Includes: SBS-modified bituminous membrane roofing system and supplementary items necessary for installation.

1.2 ALLOWANCES

A. Concrete Moisture Barrier Allowance: Include allowance to provide Concrete Moisture Barrier Treatment at concrete roof deck.

1. If Concrete Moisture Barrier Treatment is provided, delete Vapor Retarder sheet from roofing assembly.

1.3 DEFINITIONS

A. Roofing Terminology: Refer to ASTM D 1079 and glossary of NRCA's "The NRCA Roofing and Waterproofing Manual" for definition of terms related to roofing Work in this Section.

B. Roof Edge Regions: The following definitions from ANSI/SPRI ES-1 shall be applicable to this project.

1. Roof Corner Region: Based on the following:

a. For buildings with mean roof height of 60 ft (18 m) or less, the corner region is a distance from the building corner that is 10 percent of the minimum building width or 40 percent of the building height at the eaves, whichever is smaller, but not less than 4 percent of minimum building width and not less than 3 ft (0.9 m).
b. For buildings with mean roof height greater than 60 ft (18 m), the corner region is a distance from the building corner that is 10 percent of the minimum building width but not less than 3 ft (0.9 m).

2. Roof Perimeter: The section of the roof edge between corner regions as defined above. The edge condition includes the roof edge device (edge flashing or coping) and the nailers or other substrate to edge device is attached.

C. SBS: Styrene-butadiene-styrene.

1.4 ACTION SUBMITTALS

A. Product Data: Manufacturer's technical literature for each product and system indicated.

1. Include manufacturer's specifications for materials, finishes, construction details, installation instructions, and recommendations for maintenance.

B. Shop Drawings: Show details of fabrication and installation, including plans, elevations, sections, details of components and attachments to other work. Distinguish between shop and field-assembled work.

1. Show base flashings, cants, and membrane terminations.
2. Show flat and sloped tapered insulation, including slopes.
3. Show crickets and saddles, including slopes.
4. Show roof plan showing orientation of roofing ply sheets and fastener spacing.
5. Show insulation fastening patterns for corner, perimeter, and field-of-roof locations.
6. Show cold-applied adhesive pattern for insulation installation; typical pattern of a 100 square foot area.

C. Samples for Verification Purposes: For the following products:

1. Roofing membrane cap sheet, 12 in by 12 in (300 mm by 300 mm) square of color specified.
2. Flashing sheets.
3. Vapor Retarder, 12 in by 12 in (300 mm by 300 mm) square.
4. Roof insulation.
5. Walkways and protection course.
6. Termination bars.
7. Fasteners of each type, length, and finish.
8. Decorative aggregate, 10 lbs (4.5 kg) of aggregate in gradation and color indicated.

1.5 INFORMATIONAL SUBMITTALS

A. Product Test Reports: Written reports based on evaluation of comprehensive tests performed by qualified testing agency indicating that each product complies with requirements.

B. Notice of Acceptance Reports: Submit valid Product Control Notice of Acceptance (NOA) issued by Miami-Dade County Building Code Compliance Office (BCCO) for systems used at exterior of building.

C. Field Quality Control Reports: Written report of testing and inspection required by ‘‘Field Quality Control’’.

D. Concrete Roof Deck - Moisture Content Measurement: If requested by Owner or Architect, submit recorded readings.

E. Substrate Surface Temperature Readings at Cold Fluid-Applied Insulation Adhesive: If requested by Owner or Architect, submit recorded readings.

F. Manufacturer’s Project Acceptance Document: Certification by the manufacturer that its product(s) are approved, acceptable, suitable for use in specific locations, for specific details, and for applications indicated, specified, or required, and that a warranty will be issued.

G. Qualification Data:

1. For firms and persons specified in "Quality Assurance" to demonstrate their capabilities and experience. Include list of completed projects.

H. Warranty: Sample of warranty.

1. Provide manufacturer's written warranty covering materials and installation (labor) stating obligations, remedies, limitations, and exclusions.

1.6 CLOSEOUT SUBMITTALS

A. Maintenance Data: To include in maintenance manuals.

1.7 QUALITY ASSURANCE

A. Manufacturer Qualifications: Manufacturer with not less than 10 years of experience in the successful production and in-service performance of products and systems similar to scope of this Project.

B. Installer Qualifications:

1. Experience: Installer's personnel with not less than 5 years of experience in the successful performance of Work similar to scope of this Project.
2. Supervision: Installer shall maintain a competent supervisor at Project while the Work is in progress, and who has not less than 5 years of experience installing products and systems similar to scope of this Project.
3. Manufacturer Acceptance: Installer shall be certified, approved, licensed, or acceptable to manufacturer to install products.

C. Insurance Certification: Assist Owner in preparing and submitting roof installation acceptance certification as necessary in connection with fire and extended-coverage insurance on roofing and associated work.

D. Quality Standards:

1. Unless otherwise recommended by roofing system manufacturer, provide roofing system in accordance with recommendations of the NRCA "Roofing and Waterproofing Manual" for roofing type indicated.
2. Comply with FMG System Loss Prevention Data Sheet 1-49 for attachment and anchorage of nailers, blocking, and other associated members for applicable wind zone for Project.
3. Comply with FMG System Loss Prevention Data Standards 1-28 and 1-28S for attachment and anchorage of roof insulation to metal decking.

E. Fire-Test-Response Characteristics: Provide roofing system materials with the fire-test-response characteristics indicated as determined by testing identical products per test method below by UL, FMG, or another testing and inspecting agency acceptable to authorities having jurisdiction. Materials shall be identified with appropriate markings of applicable testing and inspecting agency.

1. Exterior Fire-Test Exposure: ASTM E 108, Class A, for application and roof slopes indicated.
2. Fire-Resistance Ratings: ASTM E 119, for fire-resistance-rated roof assemblies of which roofing system is a part.

1.8 PRE-INSTALLATION CONFERENCE

A. Pre-Installation Conference: Before Work begins, conduct conference at Project site.

1. Participants:

    a. Architect.
    b. Contractor, including superintendent.
    c. Installer, including project manager and supervisor (superintendent).
    d. If requested, Manufacturer's qualified technical representative.
    e. Installers of other construction interfaced with Work.
    f. Testing agency.

2. Minimum Agenda: Installer shall demonstrate understanding of the Work required by describing detailed procedures for preparing, installing, and cleaning the Work. Demonstration shall include, but not be limited to, following topics:

    a. Tour representative areas of Work, inspect and discuss condition of substrate, and other preparatory work performed by other trades.
    b. Review Contract Document requirements.
    c. Review approved submittals.
    d. Review inspection and testing requirements.
    e. Review environmental conditions and procedures for coping with unfavorable conditions.
    f. Resolve deviations or differences between Contract Documents and the manufacturer's specifications
    g. Review deck substrate requirements for conditions and finishes, including flatness, presence of moisture, and fastening.
    h. Review base flashings, special roofing details, roof drainage, roof penetrations, equipment curbs, and condition of other construction that affects roofing system.
    i. Review governing regulations and requirements for insurance and certificates if applicable.
    j. Review temporary protection requirements for roofing during and after installation.
    k. Review roof observation and repair procedures after roofing installation.

3. Record discussions, including decisions and agreements, and prepare report.

1.9 DELIVERY, STORAGE, AND HANDLING

A. Deliver materials to Project site in original containers with seals unbroken and labeled with manufacturer's name, product brand name and type, date of manufacture, approval or listing agency markings, and directions for storing and mixing with other components.

B. Store liquid materials in their original undamaged containers in a clean, dry, protected location and within the temperature range required by roofing system manufacturer. Protect stored liquid material from direct sunlight. Discard and legally dispose of liquid material that cannot be applied within its stated shelf life.

C. Protect roof insulation materials from physical damage and from deterioration by sunlight, moisture, soiling, and other sources. Store in a dry location. Comply with insulation manufacturer's written instructions for handling, storing, and protecting during installation.

D. Handle and store roofing materials and place equipment in a manner to avoid significant or permanent damage to deck or structural supporting members.

1.10 PROJECT CONDITIONS

A. Weather Limitations: Proceed with installation only when existing and forecasted weather conditions permit roofing system to be installed according to roofing system manufacturer's written instructions and warranty requirements.

1.11 COORDINATION

A. Coordinate installation of products and systems with interfacing and adjoining construction to provide a successful installation without failure.

1.12 WARRANTY

A. Manufacturer's Warranty: Furnish manufacturer's written "Total Roofing System" warranty signed by an authorized representative using manufacturer's standard form, without monetary limitation (NDL), agreeing to repair or replace components of roofing system which exhibit defects in materials or workmanship within specified warranty period. "Defects" is defined to include, but not limited to, deterioration or failure to perform as required.

1. Warranty includes roofing, flashings, adhesives, sealants, insulation, fastener systems, cover boards, substrate board, and other components of roofing system.
2. Warranty shall also include lightweight insulating concrete substrate.
3. Warranty Period: 20 years from date of Substantial Completion.

B. Installer's Warranty: Furnish installer's written warranty signed by an authorized representative using installer's standard form agreeing to repair or replace components of roofing system which exhibit defects in materials or workmanship within specified warranty period. "Defects" is defined to include, but not limited to, deterioration or failure to perform as required.

1. Warranty includes roofing, flashings, adhesives, sealants, insulation, fastener systems, cover boards, substrate board, and other components of roofing system.
2. Warranty includes roof edge flashings integral with roofing system as specified in Division 07 Section "Flashing and Sheet Metal".
3. Warranty Period: 2 years from date of Substantial Completion.

PART 2 - PRODUCTS

2.1 MANUFACTURERS AND PRODUCTS

A. Acceptable Manufacturers and Products: Subject to compliance with requirements of Contract Documents as judged by the Architect, provide product by one of manufacturers listed. If not listed, submit as substitution according to the Conditions of the Contract and Division 01 Section "Substitution Procedures".

2.2 MATERIALS, GENERAL

A. Single Source Responsibility: Furnish each type of product from single manufacturer. Provide secondary materials only as recommended by manufacturer of primary materials.

2.3 PERFORMANCE REQUIREMENTS

A. General Performance: Installed roofing system and base flashings shall withstand specified uplift pressures, thermally induced movement, and exposure to weather without failure due to defective manufacture, fabrication, installation, or other defects in construction. Roofing system and base flashings shall remain watertight.

B. Design Loads: Installed roofing system and base flashings shall withstand design loads including, but not limited to, requirements established by authorities having jurisdiction, applicable local building codes, and as indicated. Contractor shall obtain required design data and identify requirements accommodated on submittal drawings.

C. Material Compatibility: Provide roofing system materials that are compatible with one another under conditions of service and application required, as demonstrated by roofing system manufacturer based on testing and field experience.

D. Edge Systems Design: Provide edge systems that have been successfully tested by a qualified testing and inspecting agency to resist uplift pressure calculated according to SPRI's "Wind Design Standard for Edge Systems Used with Low Slope Roofing Systems" ES-1.

E. Roofing System Design: Provide roofing systems that have been successfully tested by a qualified testing and inspecting agency to resist uplift pressure and external fire exposure.

F. FMG Listing: Provide roofing system, base flashings, and component materials that comply with requirements in FMG 4450 and FMG 4470 as part of a roofing system and that are listed in FMG Approval's "RoofNav" for Class 1 or noncombustible construction, as applicable. Identify materials with FMG Approvals markings.

1. Fire/Windstorm Classification at Roof Corner and Perimeter Region: Class 1A-150.
2. Fire/Windstorm Classification at Field of Roof: Class 1A-90.

G. NOA Listing: Provide roofing system, base flashings, and component materials that comply with requirements in Notice of Acceptance as part of a roofing system, including but not limited to, fire resistance, physical properties, pull-through resistance, and wind and wind driven rain resistance in accordance with requirements of authorities having jurisdiction.

H. Energy Performance for Low Slope Roofs: Provide roofing system with initial Solar Reflectance Index not less than 78 when calculated according to ASTM E 1980 based on testing identical products by a qualified testing agency.

I. Energy Performance: Provide roofing system that is listed on the DOE's ENERGY STAR "Roof Products Qualified Product List" for low-slope roof products.

J. Energy Performance: Provide roofing system with initial solar reflectance not less than 0.70 and emissivity not less than 0.75 when tested according to CRRC-1.

2.4 MODIFIED BITUMINOUS MEMBRANE ROOFING SHEET MATERIALS

A. Vented Base Sheet: ASTM D 4897, Type II, venting, non-perforated, heavyweight, asphalt-impregnated and coated, glass-fiber base sheet with coarse granular surfacing or embossed venting channels on bottom surface; for mechanically fastening to lighweight insulating concrete substrate.

B. Base Sheet: Complying with specified products, provide one of the following as suitable for application method and performance requirements:

C. Intermediate Sheet: Complying with specified products, provide one of the following as suitable for application method and performance requirements:

1. ASTM D 6162, Grade S, Type I or II, composite polyester- and glass-fiber-reinforced.
2. ASTM D 6163, Grade S, Type I or II, glass-fiber-reinforced.
3. ASTM D 6164, Grade S, Type I or II, polyester-reinforced.

D. Cap Sheet: Factory-surfaced with ceramic-coated roofing granules, subject to prior review and acceptance by Architect.

1. Complying with specified products, provide one of the following as suitable for application method and performance requirements:

a. ASTM D 6162, Grade G, Type I or II, composite polyester- and glass-fiber-reinforced.
b. ASTM D 6163, Grade G, Type I or II, glass-fiber-reinforced.
c. ASTM D 6164, Grade G, Type I or II, polyester-reinforced.

2. Manufacturers and Products:

a. Heat-weld Cap Sheet Installation:

1) GAF; Ruberoid SBS Heat-Weld Plus FR or Ruberoid SBS Heat-Weld 170 FR.
2) Johns Manville, Inc.; DynaWeld Cap FR.
3) Siplast; Paradiene 30 FR TG.
4) Soprema; Elastophene Flam HR FR GR, Elastophene Flam LS FR GR, or Sopralene Flam 180 FR GR.

E. Metal-Foil-Surfaced Flashing Sheet: ASTM D 6298, metal-foil surfaced SBS-modified asphalt sheet (reinforced with glass fibers); suitable for application method specified, and as follows:

1. Foil Surfacing: Aluminum.
2. Manufacturers and Products:

a. GAF; Ultraclad Foil Faced SBS.
b. Johns Manville, Inc.; DynaClad.
c. Siplast; Veral Aluminum System.
d. Soprema; Sopralast series.

F. Granular-Surfaced Flashing Sheet: SBS-modified asphalt sheet; surfaced as cap sheet; suitable for application method specified.

1. Complying with specified products, provide one of the following as suitable for application method and performance requirements:

a. ASTM D 6162, Grade G, Type I or II, composite polyester- and glass-fiber-reinforced.
b. ASTM D 6163, Grade G, Type I or II, glass-fiber-reinforced.

c. ASTM D 6164, Grade G, Type I or II, polyester-reinforced.

2. Color: Match roofing membrane cap sheet.

2.5 MODIFIED BITUMINOUS MEMBRANE ROOFING SYSTEM AUXILIARY MATERIALS

A. General: Auxiliary materials recommended by roofing system manufacturer for intended use and compatible with roofing membrane. Liquid-type auxiliary materials shall meet VOC limits of authorities having jurisdiction.

1. Asphalt Primer: ASTM D 41.

B. Asphalt Roofing Cement: ASTM D 4586, asbestos free, of consistency required by roofing system manufacturer for application method.

C. Fasteners: Factory-coated steel fasteners and metal or plastic plates meeting corrosion-resistance provisions in FMG 4470, designed for fastening roofing membrane components to substrate, tested by manufacturer for required pullout strength, and acceptable to roofing system manufacturer.

D. Liquid-Applied Reinforced Membrane Flashing: Bonded to base of pipe and stack, including roof and overflow drains, as recommended by roofing system manufacturer.

1. Manufacturers and Products:

a. GAF; MajorSeal Flashing System.
b. Johns Manville, Inc.; PermaFlash Bituminous Flashing System.
c. Siplast; Parapro 123 Flashing System.
d. Soprema; Alsan Flashing System.

E. Metal Flashing Sheet: Metal flashing sheet is specified in Division 07 Section "Flashing and Sheet Metal".

F. Roofing Granules: Roofing granules, color and size to match cap sheet roofing membrane.

G. Termination Bars: ASTM A 666, Type 304 formed stainless steel or extruded alloy 6063 aluminum bars; 2 types, one flat and one flat with upper flange shaped to receive sealant, locations as indicated; 1 in by 1/8 in (25 mm by 3 mm) thick; predrilled at 8 in (200 mm) centers; with corrosive resistant fasteners. No plastic bars allowed.

H. Miscellaneous Accessories: Provide miscellaneous accessories recommended by roofing system manufacturer.

2.6 CONCRETE MOISTURE BARRIER TREATMENT

A. Concrete Moisture Barrier Treatment: Two-component, high-performance, non-flammable, rapid drying, water based, low odor, low VOC, penetrating epoxy; formulated to reduce moisture vapor transmission and surface alkalinity from concrete substrates, including aged or freshly placed ("green") concrete, prior to installation of roofing materials.

a. Basis of Design (Product Standard): Aquafin, "Vaportight Coat SG3" or product acceptable to roofing manufacturer.

2.7 SUBSTRATE BOARDS FOR FIRE RESISTANCE

A. Substrate Boards for Fire-Resistance: Select one of the following:

1. Gypsum Substrate Board: ASTM C 1396 / C 1396M, Type X, gypsum board with water-resistant-treated core and with water-repellent paper bonded to core's face, back, and long edges, 5/8 in (15 mm) thick.
2. Glass-Faced Substrate Board: ASTM C 1177 / C 1177M, Type X, glass-mat, water–resistant exterior gypsum sheathing board specifically manufactured for use beneath roofing systems, 5/8 in (15 mm) thick.

    a. Manufacturers and Products:

        1) Georgia-Pacific Gypsum LLC; DensDeck FireGuard Prime.

3. Exterior Gypsum Substrate Board: ASTM C 1278 / C 1278M, Type X, exterior gypsum sheathing board specifically manufactured for use beneath roofing systems. Non-combustible, cellulosic-fiber-reinforced, moisture-resistant gypsum core, 5/8 in (15 mm) thick.

    a. Manufacturers and Products:

        1) USG; SECUROCK Gypsum-Fiber Roof Board.

2.8 VAPOR RETARDER

A. Vapor Retarder: SBS-modified asphalt sheet, smooth surfaced. Provide one of the following; suitable for application method and performance requirements:

1. ASTM D 6162, Grade S, Type I or II, composite polyester- and glass-fiber-reinforced.
2. ASTM D 6163, Grade S, Type I or II, glass-fiber-reinforced.
3. ASTM D 6164, Grade S, Type I or II, polyester-reinforced.

B. Vapor Retarder Substrate Board: Same product as roof cover board, 1/2 in (12 mm) thickness, specified elsewhere in this Section.

2.9 ROOF INSULATION AND ACCESSORIES

A. Insulation Board at Lightweight Insulating Concrete Substrate: Refer to Division 03 Section "Lightweight Insulating Concrete" for insulation board embedded in concrete slurry.

B. General: Provide preformed roof insulation boards that comply with requirements of referenced standards, selected from manufacturer's standard sizes and thicknesses. Provide accessories recommended by insulation manufacturer for intended use and compatible with membrane roofing.

1. Provide insulation thickness required to maintain minimum aged R-value of 30.
2. Insulation board thickness of individual insulation layers to be 2 in (50 mm) maximum.
3. Insulation board size to be 4 ft by 4 ft (1.22 m by 1.22 m) maximum.
4. Provide factory, tapered insulation boards where indicated for sloping to drain. Fabricate with 1/4 in (6 mm) in per 12 in (300 mm) (1:48) taper, unless otherwise indicated.

5. Provide preformed saddles, crickets, tapered edge strips, and other insulation shapes where indicated for sloping to drain. Fabricate to slopes indicated.

C. Polyisocyanurate Board Insulation: Rigid, cellular polyisocyanurate thermal insulation with core formed by using HCFCs as blowing agents to comply with ASTM C 1289, Type II, Class 2, Grade 2, (20 psi compressive strength), except product to include only glass-fiber mat on both major surfaces.

D. Polyisocyanurate Board Insulation: Rigid, cellular polyisocyanurate thermal insulation with core formed by using HCFCs as blowing agents to comply with ASTM C 1289, Type II, Class 2, Grade 3, (25 psi compressive strength), except product to include glass-fiber mat on both major surfaces.

E. Fasteners: Factory-coated steel fasteners and metal or plastic plates meeting corrosion-resistance provisions in FMG 4470, designed for fastening roof insulation to substrate, and acceptable to roofing system manufacturer.

F. Treated Wood Nailers and Cant Strips: As specified in Division 06 Section "Miscellaneous Rough Carpentry".

2.10 ROOF ACCESSORIES

A. Treated Wood Nailers and Cant Strips: As specified in Division 06 Section "Miscellaneous Rough Carpentry".

2.11 ROOF COVER BOARDS

A. Horizontal Roof Cover Boards: Glass-Mat Faced Exterior Gypsum Sheathing Board.

1. Material Quality Standard: ASTM C 1177 / C 1177M.
2. Description: Glass-mat faced exterior gypsum sheathing board specifically manufactured for use beneath roofing systems. Non-combustible moisture-resistant gypsum core with glass-mat facings. Provide in maximum lengths and widths available that will minimize short-edge-to-short-edge butt joints and to correspond to support system indicated.
3. Manufacturers and Products:

    a. Georgia-Pacific Gypsum LLC; DensDeck Prime.

4. Thickness: Minimum 1/4 in (6 mm); or as required to meet performance requirements.

5. Thickness: Minimum 1/2 in (12 mm); or as required to meet performance requirements.

B. Horizontal Roof Cover Boards: Exterior Gypsum Sheathing Board.

1. Material Quality Standard: ASTM C 1278 / C 1278M.
2. Description: Exterior gypsum sheathing board specifically manufactured for use beneath roofing systems. Non-combustible, cellulosic-fiber-reinforced, moisture-resistant gypsum core. Provide in maximum lengths and widths available that will minimize short-edge-to-short-edge butt joints and to correspond to support system indicated.
3. Manufacturers and Products:

    a. USG; SECUROCK Gypsum-Fiber Roof Board.

4. Thickness: Minimum 1/4 in (6 mm); or as required to meet performance requirements.

5. Thickness: Minimum 1/2 in (12 mm); or as required to meet performance requirements.

C. Vertical Cover Boards (Back of Parapet): As specified in Division 06 Section “Exterior Gypsum Sheathing”.

2.12 WALKWAYS AND PROTECTION COURSE

A. Modified Bitumen Protection Course: SBS-modified asphalt cap sheet, granular surfaced; suitable for application method.

1. Basis of Design (Product Standard): Siplast; Paratread System.
2. Granule Color: As selected from manufacturer's standard colors, different from roof membrane color.
3. Location: Pathways and surrounding rooftop-mounted equipment as indicated on roof plan

B. Composition Protection Course: Mineral-granule-surfaced, reinforced composition pads, suitable for application method and acceptable to roofing system manufacturer, thickness as required 1/4 in (6 mm) minimum).

1. Basis of Design (Product Standard): Siplast; Trafbloc System.
2. Granule Color: As selected from manufacturer's standard colors, different from roof membrane color.
3. Location: Sleepers, bracings, and other rooftop equipment not mounted to roof deck.

2.13 FLASHING AND SHEET METAL

A. Flashing and Sheet Metal: Refer to Division 07 Section “Sheet Metal Flashing Trim”.

PART 3 - EXECUTION

3.1 EXAMINATION

A. Acceptance of Surfaces and Conditions: Examine substrates to receive products and systems and associated work for compliance with requirements and other conditions affecting performance. Proceed only when unsatisfactory conditions, including concrete moisture content, have been corrected in a manner complying with roofing manufacturer recommendations and Contract Documents. Starting work within a particular area will be construed as acceptance of surface conditions.

1. Verify that roof openings and penetrations are in place and set and braced and that roof drains are securely clamped in place.
2. Verify that wood blocking, curbs, and nailers are securely anchored to roof deck at penetrations and terminations and that nailers match thickness of insulation.
3. Metal Decking Substrates:

    a. Verify that surface plane flatness and fastening of steel roof deck complies with requirements in Division 05 Section "Steel Roof Decking".

4. Cast-in-Place Concrete or Composite Metal Deck Substrates:

    a. Verify that minimum concrete drying period recommended by roofing system manufacturer has passed.
    b. Concrete Moisture Testing: Perform one or both of the following tests as recommended by roofing manufacturer. Proceed with installation only after concrete substrates pass testing.

        1) Relative Humidity Test: As recommended by NRCA, perform moisture test using in situ probes in accordance with ASTM F 2170. Concrete to be drilled and probes inserted for minimum of 48 hours. Proceed with installation only after concrete substrates have a maximum 75 percent relative humidity level measurement or at a level acceptable to roofing manufacturer. Perform 3 moisture tests for first 1000 sf (92.9 sm) of concrete substrate scheduled to receive roofing and 1 test for each additional 1000 sf (92.9 sm) or fraction thereof.
        2) Manufacturer's Concrete Moisture Test: Roofing manufacturer's standard moisture test with measurements or results acceptable to roofing manufacturer.

    c. Moisture Treatment: For concrete substrates not meeting moisture test standards specified above, apply epoxy-based moisture mitigation treatment to concrete substrate in accordance with manufacturer's written instructions.
    d. Verify that concrete curing compounds that will impair adhesion of roofing components to roof deck have been removed.

5. Lightweight Insulating Concrete substrates:

    a. Verify that minimum concrete drying period recommended by roofing system manufacturer has passed.
    b. Verify that substrate is visibly dry and within the moisture limits recommended in writing by manufacturer. Test for capillary moisture by plastic sheet method according to ASTM D 4263 or as recommended by roofing manufacturer.

B. Substrate Surface Temperature at Cold Fluid-Applied Insulation Adhesive: Confirm that concrete substrate or substrate board surface temperature is a minimum 50 deg F (10 deg C) prior to application of adhesive.

3.2 INSTALLATION, GENERAL

A. Installation Quality Standards: In addition to standards listed elsewhere, perform Work according to following, unless otherwise specified:

1. Respective manufacturer's written installation instructions.
2. Accepted submittals.
3. Contract Documents.

B. Control of Corrosion: Prevent galvanic action and other forms of corrosion by isolating metals and other materials from direct contact with incompatible materials.

C. Pitch Pockets (aka Pitch Pans) at Roof Penetrations: Pitch pockets (aka pitch pans) at roofing penetrations are not allowed and will be considered non-conforming work. Refer to the drawings for allowable roof penetration details.

3.3 PREPARATION

A. General: Comply with roofing system manufacturer's instructions, recommendations and specifications for cleaning and surface preparation. Surfaces shall have no defects, contaminants, or errors which would result in poor or potentially defective installation or would cause latent defects in Work.

B. Clean substrate of dust, debris, moisture, and other substances detrimental to roofing installation according to roofing system manufacturer's written instructions. Remove sharp projections.

C. Prevent materials from entering and clogging roof drains and conductors and from spilling or migrating onto surfaces of other construction. Remove roof-drain plugs when no work is taking place or when rain is forecast.

D. Complete terminations and base flashings and provide temporary seals to prevent water from entering completed sections of roofing system at the end of the workday or when rain is forecast. Remove and discard temporary seals before beginning work on adjoining roofing.

E. Install acoustical roof deck rib insulation strips, specified in Division 05 Section "Steel Decking," according to acoustical roof deck manufacturer's written instructions, immediately before installation of overlying construction and to remain dry.

3.4 SUBSTRATE BOARDS FOR FIRE RESISTANCE - INSTALLATION

A. Install substrate boards with long joints in continuous straight lines, perpendicular to roof slopes with end joints staggered between rows. Tightly butt substrate boards together.

1. Fasten substrate boards to top flanges of steel deck according to recommendations in FMG Approvals' "RoofNav" and FM Global Loss Prevention Data Sheet 1-29 for specified Windstorm Resistance Classification.
2. Fasten substrate board to top flanges of steel deck to resist uplift pressure at corners, perimeter, and field of roof according to roofing system manufacturers' written instructions.

3.5 VAPOR RETARDER INSTALLATION

A. Vapor Retarder Substrate Board: Install substrate board with long joints in continuous straight lines, perpendicular to roof slopes with end joints staggered between rows. Tightly butt substrate boards together.

1. Fasten substrate boards to top flanges of steel deck according to recommendations in FMG Approvals' "RoofNav" and FM Global Loss Prevention Data Sheet 1-29 for specified Windstorm Resistance Classification.
2. Fasten substrate board to top flanges of steel deck to resist uplift pressure at corners, perimeter, and field of roof according to roofing system manufacturers' written instructions.

B. Vapor Retarder: Install according to roofing system manufacturer's written instructions, installing as follows:

1. Heat-weld: Heat-weld to substrate.

C. Completely seal vapor retarder at terminations, obstructions, and penetrations to prevent air movement into modified bituminous membrane roofing.

3.6 INSULATION INSTALLATION

A. General: Comply with FMG and roofing system manufacturer's written instructions for installing roof insulation. Secure insulation according to requirements in FMG's "Approval Guide" for specified Windstorm Resistance Classification.

B. General: Comply with roofing system manufacturer's written instructions for installing roof insulation. Secure insulation to substrate to resist uplift pressure at corners, perimeter, and field of roof in accordance with performance requirements.

C. Coordinate installing membrane roofing system components so insulation is not exposed to precipitation or left exposed at the end of the workday.

D. Install tapered insulation under area of roofing to conform to slopes indicated.

E. Install one or more layers of insulation under area of roofing to achieve required thickness. Where overall insulation thickness is 2 in (50 mm) or greater, install 2 or more layers with joints of each succeeding layer staggered from joints of previous layer a minimum of 6 in (150 mm) in each direction.

F. Trim surface of insulation where necessary at roof drains so completed surface is flush and does not restrict flow of water.

G. Install insulation with long joints of insulation in a continuous straight line with end joints staggered between rows, abutting edges and ends between boards. Fill gaps exceeding 1/4 in (6 mm) with insulation. Cut and fit insulation within 1/4 in (6 mm) of nailers, projections, and penetrations.

H. Cast-in-Place Concrete or Composite Metal Deck Substrate:

1. Install and adhere base layer of insulation to substrate in a layer of cold fluid-applied adhesive. Install subsequent layers of insulation in a layer of cold fluid-applied adhesive.

I. Steel Roof Deck Substrate: Provide one of the following methods according to performance criteria requirements for specified Windstorm Resistance Classification:

1. Mechanically Fastened Insulation: Install each layer of insulation and secure to deck using fasteners specifically designed and sized for fastening specified board-type roof insulation to deck type.
2. Mechanically Fastened and Adhered Insulation: Install base layer of insulation and secure to deck using mechanical fasteners specifically designed and sized for fastening specified board-type roof insulation to deck type. Install subsequent layers of insulation in a layer of cold fluid-applied adhesive.

J. Substrate Board Substrate: Install and adhere base layer of insulation to substrate board in a layer of cold fluid-applied adhesive. Install subsequent layers of insulation in a layer of cold fluid-applied adhesive.

3.7 ROOF COVER BOARD INSTALLATION

A. General: Comply with FMG and roofing system manufacturer's written instructions for installing roof cover boards. Secure roof cover boards to insulation substrate according to requirements in FMG's "Approval Guide" for specified Windstorm Resistance Classification.

B. General: Comply with roofing system manufacturer's written instructions for installing roof cover boards. Secure roof cover boards to insulation substrate to resist uplift pressure at corners, perimeter, and field of roof in accordance with Hurricane Design Performance requirements.

C. Install roof cover boards over insulation with long joints in continuous straight lines with end joints staggered between rows. Offset joints of insulation below a minimum of 6 in (150 mm) in each direction. Loosely butt roof cover boards together.

1. Provide one of the following fastening methods according to performance requirements:

a. Fasten roof cover boards through insulation into roof deck.
b. Adhere roof cover boards to insulation substrate in a layer of cold fluid-applied adhesive.

1) Score boards, if necessary, to conform to substrate irregularities. Comply with manufacturer's installation recommendations to insure proper adhesion and adhesive set.

D. Secure roof cover boards to insulation to resist uplift pressure at corners, perimeter, and field of roof according to membrane roofing system manufacturer's written instructions.

3.8 VENTING BASE-SHEET INSTALLATION

A. Install lapped base sheet course, extending sheet over and terminating beyond cants. Mechanically fasten to lightweight insulating concrete substrate according to roofing system manufacturer's written instructions.

3.9 MODIFIED BITUMINOUS MEMBRANE ROOFING SYSTEM INSTALLATION

A. Install roofing according to roofing system manufacturer's written instructions and applicable recommendations of ARMA/NRCA's "Quality Control Guidelines for the Application of Polymer Modified Bitumen Roofing". Unroll roofing membrane sheets and allow them to relax for minimum time period required by manufacturer.

B. Start installation of roofing system in presence of roofing system manufacturer's technical personnel.

C. Cooperate with testing and inspecting agencies engaged or required to perform services for installing roofing system.

D. Coordinate installing roofing system so insulation and other components of the roofing system not permanently exposed are not subjected to precipitation or left uncovered at the end of the workday or when inclement weather is forecast.

1. Provide tie-offs at end of each day's work to cover exposed roofing ply sheets and insulation with a course of coated felt set in roofing cement with joints and edges sealed.
2. Complete terminations and base flashings and provide temporary seals to prevent water from entering completed sections of roofing system.
3. Remove and discard temporary seals before beginning work on adjoining roofing.

E. Substrate-Joint Penetrations: Prevent roofing asphalt and adhesives from penetrating substrate joints, entering building, or damaging roofing system components or adjacent building construction.

F. Install modified bituminous roofing base sheet and cap sheet according to roofing system manufacturer's written instructions, starting at low point of roofing system. Extend roofing sheets over and terminate beyond cants, installing as follows:

1. Intermediate Sheets:

   a. Heat-weld: Heat-weld to substrate.

2. Base Sheets:

   a. Heat-weld: Heat-weld to substrate.

3. Cap Sheets:

   a. Heat-weld: Heat-weld to substrate.

G. Laps: Accurately align roofing sheets, without stretching, and maintain uniform side and end laps. Stagger end laps. Completely bond and seal laps, leaving no voids.

1. Repair tears and voids in laps and lapped seams not completely sealed.
2. Apply roofing granules/chips to cover extruded bead at laps while bead is hot.

H. Install roofing sheets so side and end laps shed water.

3.10 BASE FLASHING AND STRIPPING INSTALLATION

A. Install base flashing over cant strips and other sloping and vertical surfaces, at roof edges, and at penetrations through roof, and secure to substrates according to roofing system manufacturer's written instructions and to meet warranty requirements:

1. Prime substrates with asphalt primer if required by roofing system manufacturer.
2. Flashing Sheet Application: Install as follows and in compliance with performance requirements:

   a. Heat-weld flashing sheet to substrate.

B. Extend base flashing up walls or parapets a minimum of 8 in (200 mm) above roofing and 4 in (100 mm) onto field of roofing.

C. Using termination bars, mechanically fasten top of base flashing securely at terminations and perimeter of roofing.

D. Install roofing cap-sheet stripping where metal flanges and edgings are set on roofing according to roofing system manufacturer's written instructions.

E. Roof Drains: Set metal flashing in bed of asphalt roofing cement on completed roofing. Cover metal flashing with roofing cap-sheet stripping and extend a minimum of 4 in (100 mm) to 6 in (150 mm) beyond edge of metal flashing onto field of roofing. Clamp roofing, metal flashing, and stripping into roof-drain clamping ring. Install stripping according to roofing system manufacturer's written instructions.

F. Liquid-Applied Reinforced Membrane Flashings: Liquid applied reinforced membrane bonded to base at pipe and stacks. Install according to roofing system manufacturer's written instructions.

G. Protection Course for Lightning Protection System: Apply 12 in by 12 in (300 mm by 300 mm) additional layer of base flashing material over the vertical face of parapet for lightning protection system and as recommended by manufacturer.

3.11 FIELD QUALITY CONTROL

A. Manufacturer's Field Service: Manufacturer's qualified technical representative shall periodically inspect Work to ensure installation is proceeding in accordance with manufacturer's designs, recommendations, instructions, and warranty requirements. Representative shall submit written reports of each visit indicating observations, findings, and conclusions of inspection.

1. Manufacturer's Technical Representative Qualifications: Direct employee of technical services department of manufacturer with experience in providing recommendations, observations, evaluations, and problem diagnostics.

B. Testing Agency: The Owner may employ and pay a qualified independent testing agency to perform field quality control, including infrared inspections on installed roof assemblies. Materials and installation failing to meet specified requirements shall be replaced at Contractor's expense. Retesting of materials and installations failing to meet specified requirements shall be done at Contractor’s expense.

1. Infrared Inspection: Where infrared survey indicates moisture intrusion, wet insulation and damaged or deficient materials or construction shall be replaced in a manner to provide watertight and specified wind uplift resistant construction, and maintain the roof system warranty.

3.12 REPAIR, CLEANING, AND PROTECTING

A. Protect roofing system from damage and wear during remainder of construction period. When remaining construction will not affect or endanger roofing, inspect roofing for deterioration and damage, describing its nature and extent in a written report, with copies to Architect and Owner.

B. Correct deficiencies in or remove roofing system that does not comply with requirements, repair substrates, and repair or reinstall roofing system to a condition free of damage and deterioration at time of Substantial Completion and according to warranty requirements.

C. Clean overspray and spillage from adjacent construction using cleaning agents and procedures recommended by manufacturer of affected construction.

END OF SECTION

SECTION 07 6200

SHEET METAL FLASHING AND TRIM

PART 1 - GENERAL

1.1 SUMMARY

A. Section Includes: Flashing and sheet metal including assemblies listed below along with supplementary items necessary for installation:

1. Reglets with counterflashing.
2. Roof-drainage sheet metal fabrications.
3. Steep-slope roof sheet metal fabrications.
4. Embedded flashing.
5. Equipment support flashing.
6. Overhead-piping safety pans.

B. Related Requirements:

1. Refer to Division 6 Section "Rough Carpentry" for wood nailers, curbs, and blocking.
2. Refer to Division 7 Section for set-on-type curbs, equipment supports, roof hatches, vents, and other manufactured roof accessory units.

~~**1.2 DELEGATED ENGINEERING REQUIREMENTS FOR COPINGS AND GRAVEL GUARDS**~~

~~A. Contract Documents Design Intent: Drawings and Specifications indicate design intent for products and systems and do not necessarily indicate or specify total Work required. Contract Documents shall not be construed as an engineered design; furnish and install all Work required for a complete installation.~~

~~B. Delegated Engineering Responsibility: Contractor shall employ a qualified professional engineer to provide engineering for products and systems including attachment to building structure required to meet design intent of Contract Documents.~~

~~1. Preparation of structural analysis data including engineering calculations, shop drawings and other submittals signed and sealed by the qualified professional engineer.~~

~~C. Delegated Engineering Professional Qualifications: Professional engineer legally authorized to practice in jurisdiction where Project is located and experienced in providing engineering services of kind indicated for products and systems similar to this Project and has a record of successful in-service performance.~~

~~D. Coordination of Work:~~

~~1. Product Variations: In the event of minor differences between products and systems of acceptable or available manufacturers, Contractor shall notify Architect of such differences and resolve conflicts in a timely manner. Failure of Contractor to provide notification shall be construed as acceptance of conditions indicated, and changes caused by minor differences between products and Contract Documents shall be~~

~~included in the Work at no additional cost to Owner.~~

~~2. Allowable Adjustments: Minor dimension and profile adjustments may be made in interest of fabrication or erection methods or techniques or ability to satisfy design intent, provided design intent is maintained as determined by Architect. Proposed deviations shall include a detailed analysis of impact to adjacent substrates or other building systems, including related design or construction cost impacts. If accepted by Architect, deviations causing changes in materials, constructability, substrates, or conditions shall be included in the Work at no additional cost to Owner.~~

1.3 ACTION SUBMITTALS

A. Product Data: Manufacturer's technical literature for each product and system indicated.

1. Include construction details, material descriptions, dimensions of individual components and profiles, and finishes for each manufactured product and accessory.

B. Shop Drawings: For sheet metal flashing and trim.

1. Include plans, elevations, sections, and attachment details.
2. Detail fabrication and installation layouts, expansion-joint locations, and keyed details. Distinguish between shop- and field-assembled work.
3. Include identification of material, thickness, weight, and finish for each item and location in Project.
4. Include details for forming, including profiles, shapes, seams, and dimensions.
5. Include details for joining, supporting, and securing, including layout and spacing of fasteners, cleats, clips, and other attachments. Include pattern of seams.
6. Include details of termination points and assemblies.
7. Include details of roof-penetration flashing.
8. Include details of special conditions.
9. Include details of connections to adjoining work.

C. Samples for Initial Selection: For each type of sheet metal and accessory indicated with factory-applied finishes.

D. Samples for Verification Purposes: Submit for items listed below; provide samples made from 12 in (300 mm) lengths of full-size components including fasteners, cover joints, accessories, and attachments.

1. Sheet Metal Flashing: 12 in (300 mm) long by actual width of unit, including finished seam and in required profile. Include fasteners, cleats, clips, closures, and other attachments.
2. Trim, Metal Closures, Expansion Joints, Joint Intersections, and Miscellaneous Fabrications: 12 in (300 mm) long and in required profile. Include fasteners and other exposed accessories.
3. Unit-Type Accessories and Miscellaneous Materials: Full-size Sample.

1.4 INFORMATIONAL SUBMITTALS

A. Delegated Engineering Calculations: Structural analysis data signed and sealed by the qualified professional engineer responsible for their preparation; test reports are not acceptable substitute for calculations.

B. Product Certificates: For each type of coping and roof edge flashing that is SPRI ES-1 tested.

C. Product Test Reports: Written reports based on evaluation of comprehensive tests performed by qualified testing agency indicating that each product complies with requirements.

D. Manufacturer's Project Acceptance Document: Certification by the manufacturer that its product(s) are approved, acceptable, suitable for use in specific locations, for specific details, and for applications indicated, specified, or required, and that a warranty will be issued.

E. Qualification Data:

1. For firms and persons specified in "Quality Assurance" to demonstrate their capabilities and experience. Include list of completed projects.

F. Warranty: Sample of warranty.

1. Provide manufacturer’s written warranty covering materials and installation (labor) stating obligations, remedies, limitations and exclusions.

1.5 CLOSEOUT SUBMITTALS

A. Maintenance Data: For sheet metal flashing and trim, and its accessories, to include in maintenance manuals.

1.6 QUALITY ASSURANCE

A. Manufacturer/Fabricator Qualifications: Manufacturer/shop-fabricator with not less than 5 years experience with successful production of products and systems similar to scope of this Project, with a record of successful in-service performance and completion of projects for a period of not less than 5 years, and with sufficient production capability, facilities, and personnel to produce required Work.

1. For copings and roof edge flashings that are SPRI ES-1 tested, shop shall be NRCA listed or shall provide other evidence acceptable to Architect as able to fabricate required details as tested and approved.

B. Installer Qualifications:

1. Experience: Installer's personnel with not less than 5 years of experience in the successful performance of Work similar to scope of this Project.
2. Supervision: Installer shall maintain a competent supervisor at Project while the Work is in progress, and who has not less than 5 years of experience installing products and systems similar to scope of this Project.

C. Mock-ups: Prior to fabrication and installation, build mock-up for each form of construction and finish required to verify selections made under sample Submittals and to demonstrate aesthetic effects and qualities of materials and execution. Build mock-up using materials indicated for the completed Work.

1.7 PRE-INSTALLATION CONFERENCE

A. Pre-Installation Conference: Before Work begins, conduct conference at Project site.

1. Participants:

    a. Architect.
    b. Contractor, including superintendent.
    c. Installer, including project manager and supervisor.
    d. If requested, Manufacturer's qualified technical representative.
    e. Installers of other construction interfaced with Work.

2. Minimum Agenda: Installer shall demonstrate understanding of the Work required by describing detailed procedures for preparing, installing, and cleaning the Work. Demonstration shall include, but not be limited to, following topics:

    a. Tour representative areas of Work, inspect and discuss condition of substrate, and other preparatory work performed by other trades.
    b. Review Contract Document requirements.
    c. Review approved submittals.
    d. Review inspection and testing requirements.
    e. Review environmental conditions and procedures for coping with unfavorable conditions.
    f. Resolve deviations or differences between Contract Documents and the manufacturer's specifications.

3. Record discussions, including decisions and agreements, and prepare report.

1.8 DELIVERY, STORAGE, AND HANDLING

A. Deliver sheet metal flashing materials and fabrications undamaged. Protect sheet metal flashing and trim materials and fabrications during transportation and handling.

B. Unload, store, and install sheet metal flashing materials and fabrications in a manner to prevent bending, warping, twisting, and surface damage.

C. Stack materials on platforms or pallets, covered with suitable weathertight and ventilated covering. Do not store sheet metal flashing and trim materials in contact with other materials that might cause staining, denting, or other surface damage. Store sheet metal flashing materials and fabrications away from uncured concrete and masonry.

D. Protect strippable protective covering on sheet metal flashing and trim from exposure to sunlight and high humidity, except to extent necessary for period of sheet metal flashing and trim installation.

1.9 PROJECT CONDITIONS

A. Weather Limitations: Proceed with installation only when existing and forecasted weather conditions permit flashing and sheet metal work to be performed according to manufacturer's written instructions and warranty requirements.

B. Field Measurements: Where products and systems are indicated to fit walls and other construction, verify dimensions by field measurements before fabrication.

1.10 COORDINATION

A. Coordinate installation of products and systems with interfacing and adjoining construction to provide a successful installation without failure.

B. Coordinate sheet metal flashing and trim layout and seams with sizes and locations of penetrations to be flashed, and joints and seams in adjacent materials.

C. Coordinate sheet metal flashing and trim installation with adjoining roofing and wall materials, joints, and seams to provide leakproof, secure, and noncorrosive installation.

1.11 WARRANTY

A. Installer's Warranty: Furnish installer's written warranty signed by an authorized representative using installer's standard form agreeing to repair or replace components of all sheet metal flashing assemblies that exhibit defects in materials or workmanship within specified warranty period. "Defects" is defined to include, but not limited to, deterioration or failure to perform as required.

1. Warranty Period: 2 years from date of Substantial Completion.

B. Factory Applied Finish Warranty: Furnish manufacturer's written warranty signed by an authorized representative using manufacturer's standard form agreeing to repair finish or replace work which exhibits finish defects. "Defects" is defined to include but not limited to deterioration or failure of finish to perform as required.

1. Coverage includes but is not limited to the following:

   a. Color fading more than 5 Hunter units when tested according to ASTM D 2244.
   b. Chalking in excess of a No. 8 rating when tested according to ASTM D 4214.
   c. Cracking, checking, peeling, or failure of paint to adhere to bare metal.

2. Warranty Period: Manufacturer shall warrant the installation to be free from finish defects for a period of 20 years from date of Substantial Completion.

PART 2 - PRODUCTS

2.1 MANUFACTURERS AND PRODUCTS

A. Available Manufacturers and Products: Subject to compliance with requirements of Contract Documents as judged by the Architect, manufacturers offering products that may be incorporated into the Work include, but are not limited to, those listed.

1. Manufacturers:

   a. Cheney Flashing Company.
   b. Fry Reglet Corporation.
   c. Hickman Company, W. P.
   d. Keystone Flashing Company, Inc.
   e. MM Systems Corporation.
   f. Petersen Aluminum Corporation.

2.2 MATERIALS, GENERAL

A. Single Source Responsibility: Furnish each type of product from single manufacturer. Provide secondary materials only as recommended by manufacturer of primary materials.

2.3 PERFORMANCE REQUIREMENTS

A. General: Sheet metal flashing and trim assemblies shall withstand wind loads, structural movement, thermally induced movement, and exposure to weather without failure due to defective manufacture, fabrication, installation, or other defects in construction. Completed sheet metal flashing and trim shall not rattle, leak, or loosen, and shall remain watertight.

B. Design Loads: Installed sheet metal flashing materials and fabrications shall withstand design loads including, but not limited to, requirements established by authorities having jurisdiction, applicable local building codes, and as indicated. Contractor shall obtain required design data and identify requirements accommodated on submittal drawings.

C. Material Compatibility: Provide flashing and sheet metal materials that are compatible with one another and specified roofing system under conditions of service and application required, as demonstrated by manufacturer based on testing and field experience.

D. Sheet Metal Standard for Flashing and Trim: Comply with NRCA's "The NRCA Roofing Manual" and SMACNA's "Architectural Sheet Metal Manual" requirements for dimensions and profiles shown unless more stringent requirements are indicated.

E. SPRI Wind Design Standard: Manufacture and install copings and roof edge flashings tested according to SPRI ES-1 and capable of resisting the following design pressure:

1. Design Pressure: As indicated on Drawings.

F. Thermal Movements: Allow for thermal movements from ambient and surface temperature changes to prevent buckling, opening of joints, overstressing of components, failure of joint sealants, failure of connections, and other detrimental effects. Base calculations on surface temperatures of materials due to both solar heat gain and nighttime-sky heat loss.

1. Temperature Change: 120 deg F (67 deg C), ambient; 180 deg F (100 deg C), material surfaces.

2.4 SHEET METALS

A. General: Protect mechanical and other finishes on exposed surfaces from damage by applying strippable, temporary protective film before shipping.

B. Aluminum Sheet: ASTM B 209 (ASTM B 209M), alloy as standard with manufacturer for finish required, with temper as required to suit forming operations and performance required; with smooth, flat surface.

1. Exposed Coil-Coated Finish:

a. Two-Coat Fluoropolymer: AAMA 2605. Fluoropolymer finish containing not less than 70 percent PVDF resin by weight in color coat. Prepare, pretreat, and apply coating to exposed metal surfaces to comply with coating and resin manufacturers'

written instructions.

2. Color: As scheduled or as indicated in Drawings.
3. Concealed Finish: Pretreat with manufacturer's standard white or light-colored acrylic or polyester backer finish, consisting of prime coat and wash coat with minimum total dry film thickness of 0.5 mil (0.013 mm).

C. Stainless-Steel Sheet: ASTM A 240/A 240M or ASTM A 666, Type 304 , dead soft, fully annealed; with smooth, flat surface.

1. Finish: 2D (dull, cold rolled).

D. Metallic-Coated Steel Sheet:

1. Zinc-coated (galvanized) steel sheet according to ASTM A 653/A 653M, G90 (Z275) coating designation.
2. Aluminum-zinc alloy-coated steel sheet according to ASTM A 792/A 792M, Class AZ50 (Class AZM150) coating designation, Grade 40 (Grade 275); prepainted by coil-coating process to comply with ASTM A 755/A 755M.
3. Expoosed Finish:

a. Surface: Smooth, flat.
b. Exposed Coil-Coated Finish:

1) Two-Coat Fluoropolymer: AAMA 621. Fluoropolymer finish containing not less than 70 percent PVDF resin by weight in color coat. Prepare, pretreat, and apply coating to exposed metal surfaces to comply with coating and resin manufacturers' written instructions.

4. Color and Gloss: As scheduled or as indicated in Drawings.
5. Concealed Finish: Pretreat with manufacturer's standard white or light-colored acrylic or polyester backer finish, consisting of prime coat and wash coat with minimum total dry film thickness of 0.5 mil (0.013 mm).

2.5 UNDERLAYMENT MATERIALS

A. Material Compatibility: Provide underlayment materials that are compatible with substrates and specified roofing system under conditions of service and application required, as demonstrated by manufacturer based on testing and field experience.

B. Self-Adhering, High-Temperature Sheet Underlayment: Minimum 30 mils (0.76 mm) thick, consisting of a slip-resistant polyethylene- or polypropylene-film top surface laminated to a layer of butyl- or SBS-modified asphalt adhesive, with release-paper backing; specifically designed to withstand high metal temperatures beneath metal roofing. Provide primer according to written recommendations of underlayment manufacturer.

1. Thermal Stability: ASTM D 1970; stable after testing at 240 deg F (116 deg C) or higher.
2. Low-Temperature Flexibility: ASTM D 1970; passes after testing at minus 20 deg F (29 deg C) or lower.
3. SBS-Modified Asphalt Adhesive based Manufacturers and Products:

a. Carlisle Coatings & Waterproofing; CCW WIP 300HT.

b. Grace Construction Products, a unit of W. R. Grace & Co.; Ice and Water Shield HT.
c. Henry Company; Blueskin PE200 HT.
d. Metal-Fab Manufacturing, LLC; MetShield.
e. Owens Corning; WeatherLock Metal High Temperature Underlayment.

4. Butyl Adhesive based Manufacturers and Products:

a. Grace Construction Products, a unit of W. R. Grace & Co.; Ultra.

5. Primer: Provided by underlayment manufacturer.
6. Underlayment Sealing Tape: Provided by underlayment manufacturer.

C. Slip Sheet: If recommended by manufacturer to separate sheet metal from underlayment; rosin-sized building paper, 3 lb/100 sq. ft. (0.16 kg/sq. m) minimum.

2.6 MISCELLANEOUS MATERIALS

A. General: Provide materials and types of fasteners, solder, protective coatings, sealants, and other miscellaneous items as required for complete sheet metal flashing and trim installation and as recommended by manufacturer of primary sheet metal or manufactured item unless otherwise indicated.

B. Fasteners: Manufacturer's recommended wood screws, annular threaded nails, self-tapping screws, self-locking rivets and bolts, and other suitable fasteners designed to withstand design loads and recommended by manufacturer of primary sheet metal or manufactured item.

1. General: Blind fasteners or self-drilling screws, gasketed, with hex-washer head.

a. Exposed Fasteners: Heads matching color of sheet metal using plastic caps or factory-applied coating. Provide metal-backed EPDM or PVC sealing washers under heads of exposed fasteners bearing on weather side of metal.
b. Blind Fasteners: High-strength aluminum or stainless-steel rivets suitable for metal being fastened.

2. Fasteners for Aluminum Sheet: Aluminum or Series 300 stainless steel.
3. Fasteners for Stainless-Steel Sheet: Series 300 stainless steel.
4. Fasteners for Zinc-Coated (Galvanized) or Aluminum-Zinc Alloy-Coated Steel Sheet: Series 300 stainless steel or hot-dip galvanized steel according to ASTM A 153/A 153M or ASTM F 2329.

C. Solder:
1. For Stainless Steel: ASTM B 32, Grade Sn60, with acid flux of type recommended by stainless-steel sheet manufacturer.
2. For Zinc-Coated (Galvanized) Steel: ASTM B 32, Grade Sn50, 50 percent tin and 50 percent lead or Grade Sn60, 60 percent tin and 40 percent lead with maximum lead content of 0.2 percent.

D. Rubberized-Asphalt Flexible Flashing: Composite flashing product consisting of a pliable, adhesive rubberized-asphalt compound, bonded to a high-density, cross-laminated polyethylene film to produce an overall thickness of not less than 0.040 in (1.02 mm).

1. Manufacturers and Products:

a. Carlisle Coatings & Waterproofing; CCW-705-TWF Thru-Wall Flashing.
b. Dayton Superior Corporation, Dur-O-Wal Division; Dur-O-Barrier Thru-Wall Flashing.
c. Grace Construction Products, W.R. Grace & Co.-Conn.; Perm-A-Barrier Wall Flashing.
d. Heckmann Building Products, Inc.; No. 82 Rubberized-Asphalt Thru-Wall Flashing.
e. Hohmann & Barnard, Inc.; Textroflash.
f. W.R. Meadows, Inc.; Air-Shield Thru-Wall Flashing.
g. Polyguard Products, Inc.; Polyguard 400.

2. Accessories: Provide preformed corners, end dams, other special shapes, and seaming materials produced by flashing manufacturer.

E. Sealant Tape: Pressure-sensitive, 100 percent solids, polyisobutylene compound sealant tape with release-paper backing. Provide permanently elastic, nonsag, nontoxic, nonstaining tape 1/2 in (12 mm) wide and 1/8 in (3 mm) thick.

F. Elastomeric Sealant: ASTM C 920, elastomeric silicone polymer sealant; of type, grade, class, and use classifications required to seal joints in sheet metal flashing and trim and remain watertight.

G. Sealant for Use at Concealed Joints: Contractor's option, one of the following:

1. Butyl: ASTM C 1311, single-component, solvent-release butyl rubber sealant; polyisobutylene plasticized; heavy bodied for expansion joints with limited movement.
2. Silicone: ASTM C 920, single-component, neutral cure silicone sealant.

a. Basis of Design: Dow Corning; 758 Silicone Weather Barrier Sealant.

H. Bituminous Coating: Cold-applied asphalt mastic, SSPC-Paint 12, or cold-applied asphalt emulsion complying with ASTM D 1187; compounded for 15 mils (0.4 mm) dry film thickness per coat. Provide inert-type noncorrosive compound free of asbestos fibers, sulfur components, and other deleterious impurities.

I. Asphalt Roofing Cement: ASTM D 4586, asbestos free, of consistency required for application.

2.7 FABRICATION, GENERAL

A. General: Custom fabricate sheet metal flashing and trim to comply with details shown and recommendations in cited sheet metal standard that apply to design, dimensions, geometry, metal thickness, and other characteristics of item required. Fabricate sheet metal flashing and trim in shop to greatest extent possible.

1. Fabricate sheet metal flashing and trim in thickness or weight needed to comply with performance requirements, but not less than that specified for each application and metal.
2. Obtain field measurements for accurate fit before shop fabrication.
3. Form sheet metal flashing and trim to fit substrates without excessive oil canning, buckling, and tool marks; true to line, levels, and slopes; and with exposed edges folded back to form hems.
4. Conceal fasteners and expansion provisions where possible. Do not use exposed fasteners on faces exposed to view.

B. Fabrication Tolerances: Fabricate sheet metal flashing and trim that is capable of installation to a tolerance of 1/4 in in 20 ft (6 mm in 6 m) on slope and location lines indicated on Drawings and within 1/8 in (3 mm) offset of adjoining faces and of alignment of matching profiles.

C. Expansion Provisions: Provide for thermal expansion of exposed flashing and trim. Space movement joints at maximum of 10 ft (3 m) with no joints within 24 in (600 mm) of corner or intersection.

D. Sealant Joints: Where movable, non-expansion-type joints are required, form metal to provide for proper installation of elastomeric sealant according to cited sheet metal standard.

E. Fabricate cleats and attachment devices from same material as accessory being anchored or from compatible, noncorrosive metal.

F. Fabricate cleats and attachment devices of sizes as recommended by cited sheet metal standard and by FM Global Property Loss Prevention Data Sheet 1-49 for application, but not less than thickness of metal being secured.

G. Soldered Seams: Fabricate nonmoving seams with flat-lock seams except at corners. Rivet joints where necessary for strength

1. Corners: Shop fabricate, factory mitered corners with continuously welded or soldered seams. Fabricate corners with no joints within 24 in (600 mm) of corner or intersection.

H. Copings 12" Wide or Less: Form butted joints with expansion space and 12 in (300 mm) wide, concealed backup plate with double sealant on each side of joint.

I. Copings Over 12" Wide: Form joints of intermeshing hooked flanges, not less than 1 in (25 mm) deep, filled with sealant concealed within joints.

J. Do not use graphite pencils to mark metal surfaces.

2.8 SHEET METAL FLASHING AND TRIM

A. Reglets: Units of type, material, and profile required, formed to provide secure interlocking of separate reglet and counterflashing pieces, and compatible with flashing indicated.

1. Fabricate from the Following Materials, minimum thickness as indicated unless required otherwise to meet performance requirements.
   a. Galvanized Steel: 0.028 in (0.7 mm) thick.

2. Corners: Factory mitered, mechanically clinched and sealed watertight.
3. Joints: Lapped, double seal with sealant.
4. Surface-Mounted Type: Provide with slotted holes for fastening to substrate, with neoprene or other suitable weatherproofing washers, and with channel for sealant at top edge.
5. Accessories:

   a. Flexible-Flashing Retainer: Provide resilient plastic or rubber accessory to secure flexible flashing in reglet where clearance does not permit use of standard metal counterflashing or where Drawings show reglet without metal counterflashing.

b. Counterflashing Wind-Restraint Clips: Provide clips to be installed before counterflashing to prevent wind uplift of counterflashing's lower edge.

6. Finish: With manufacturer's standard color coating, unless indicated otherwise.

2.9 ROOF-DRAINAGE SHEET METAL FABRICATIONS

A. Hanging Gutters: Fabricate to cross section required, complete with end pieces, outlet tubes, and other accessories as required. Fabricate in minimum 96 in (2400 mm) long sections. Furnish flat-stock gutter brackets and gutter spacers and straps fabricated from same metal as gutters, of size recommended by cited sheet metal standard but with thickness not less than twice the gutter thickness. Fabricate expansion joints, expansion-joint covers, gutter bead reinforcing bars, and gutter accessories from same metal as gutters. Shop fabricate interior and exterior corners.

1. Gutter Profile: As indicated on Drawings, according to cited sheet metal standard.
2. Accessories: Wire-ball downspout strainer, Valley baffles.
3. Gutters with Girth up to 15 in (375 mm): Fabricate from the following materials, minimum thickness as indicated unless required otherwise to meet performance requirements.
   a. Aluminum: 0.032 in (0.8 mm) thick.
   b. Galvanized Steel: 0.028 in (0.7 mm) thick.
   c. Aluminum-Zinc Alloy-Coated Steel: 0.028 in (0.7 mm) thick.

4. Gutters with Girth 16 to 20 In (400 to 500 mm): Fabricate from the following materials:
   a. Aluminum: 0.040 in (1.0 mm) thick.
   b. Galvanized Steel: 0.028 in (0.7 mm) thick.
   c. Aluminum-Zinc Alloy-Coated Steel: 0.028 in (0.7 mm) thick.

5. Corners: Factory mitered, mechanically clinched and sealed watertight.
6. Joints: Lapped, double seal with sealant.

B. Downspouts: Fabricate rectangular, unless indicated otherwise, downspouts to dimensions indicated, complete with mitered elbows. Furnish with metal hangers from same material as downspouts and anchors. Shop fabricate elbows. Size as recommended by SMACNA.

1. Hanger Style: As indicated, according to SMACNA's "Architectural Sheet Metal Manual."
2. Fabricate from the following materials, minimum thickness as indicated unless required otherwise to meet performance requirements.

   ~~a. Copper: 16 oz./sq. ft. (0.55 mm thick).~~
   b. Aluminum: 0.032 in (0.8 mm) thick.
   c. Galvanized Steel: 0.028 in (0.7 mm) thick.
   d. Aluminum-Zinc Alloy-Coated Steel: 0.028 in (0.7 mm) thick.

C. Splash Pans: Fabricate to dimensions and shape required and from the following materials:
   1. Aluminum: 0.040 in (1.0 mm) thick.
   2. Corners and Joints: Factory mitered, solder or weld watertight.

2.10 LOW-SLOPE ROOF SHEET METAL FABRICATIONS

A. Roof Expansion-Joint Covers, 2 In (50 mm) and Less: Fabricate cap type expansion cover with continuous flanges to hold cap and serve as counter flashing. Form section not to exceed 12 ft

(3.6 m) in length and joint cap sections by standing seams held in place by cleats. Shop fabricate interior and exterior corners. Fabricate from the following materials, minimum thickness as indicated unless required otherwise to meet performance requirements.

1. Aluminum: 0.050 in (1.25 mm) thick.
2. Galvanized Steel: 0.034 in (0.86 mm) thick.
3. Aluminum-Zinc Alloy-Coated Steel: 0.034 in (0.8 mm) thick.
4. Joint Style: Standing seam and seal with sealant.
5. Corners: Factory mitered and mechanically clinched and sealed watertight.
6. Joints: Standing seam, seal with sealant.

B. Manufactured Roof Expansion Joint Cover Systems, 2 in (50 mm) and Greater:

1. Refer to Division 07 Section "Expansion Control" for manufactured roof expansion joint covers.

C. Counterflashing: Manufactured units of heights to overlap top edges of base flashings by 4 in (100 mm) and in lengths not exceeding 12 ft (3.6 m) designed to snap into through-wall-flashing receiver and compress against base flashings with joints lapped. Shop fabricate interior and exterior corners. Fabricate from the following materials, minimum thickness as indicated unless required otherwise to meet performance requirements.

1. Aluminum: 0.032 in (0.8 mm) thick.
2. Galvanized Steel: 0.028 in (0.7 mm) thick.
3. Aluminum-Zinc Alloy-Coated Steel: 0.028 in (0.7 mm) thick.
4. Corners: Factory mitered and mechanically clinched and sealed watertight.
5. Joints: Lapped, double seal with sealant.

D. Flashing Receivers: Fabricate from same materials as counterflashing.

E. Roof-Penetration Flashing: Fabricate from the following materials:

1. Galvanized Steel: 0.028 in (0.7 mm) thick.
2. Aluminum-Zinc Alloy-Coated Steel: 0.028 in (0.7 mm) thick.

2.11 STEEP-SLOPE ROOF SHEET METAL FABRICATIONS

A. Valley Flashing: Fabricate from the following materials, minimum thickness as indicated unless required otherwise to meet performance requirements.

1. Copper: 16 oz./sq. ft. (0.55 mm thick) .
2. Stainless Steel: 0.025 in (0.64 mm) thick.
3. Galvanized Steel: 0.028 in (0.7 mm) thick.
4. Aluminum-Zinc Alloy-Coated Steel: 0.028 in (0.7 mm) thick.
5. Joints: Lapped, double seal with sealant.

B. Drip Edges: Fabricate from the following materials, minimum thickness as indicated unless required otherwise to meet performance requirements.

1. Copper: 16 oz./sq. ft. (0.55 mm thick) .
2. Stainless Steel: 0.025 in (0.64 mm) thick.
3. Galvanized Steel: 0.028 in (0.7 mm) thick.
4. Aluminum-Zinc Alloy-Coated Steel: 0.028 in (0.7 mm) thick.
5. Joints: Lapped, double seal with sealant.

C. Eave, Rake, Ridge, and Hip Flashing: Fabricate from the following materials, minimum thickness as indicated unless required otherwise to meet performance requirements.

1. Copper: 16 oz./sq. ft. (0.55 mm thick) .
2. Stainless Steel: 0.025 in (0.64 mm) thick.
3. Galvanized Steel: 0.028 in (0.7 mm) thick.
4. Aluminum-Zinc Alloy-Coated Steel: 0.028 in (0.7 mm) thick.

D. Counterflashing: Shop fabricate with factory mitered and continuously welded corners, seal watertight. Fabricate from the following materials, minimum thickness as indicated unless required otherwise to meet performance requirements.
1. Galvanized Steel: 0.028 in (0.7 mm) thick.
2. Aluminum-Zinc Alloy-Coated Steel: 0.028 in (0.7 mm) thick.
3. Joints: Lapped, double seal with sealant.

E. Flashing Receivers: Fabricate from same materials as counterflashing.

F. Roof-Penetration Flashing: Fabricate from the following materials:
1. Galvanized Steel: 0.028 in (0.7 mm) thick.
2. Aluminum-Zinc Alloy-Coated Steel: 0.028 in (0.7 mm) thick.

2.12 MISCELLANEOUS SHEET METAL FABRICATIONS

A. Equipment Support Flashing: Fabricate from the following materials:
1. Galvanized Steel: 0.028 in (0.7 mm) thick.

B. Overhead-Piping Safety Pans: Fabricate from the following materials:

1. Stainless Steel: 0.025 in (0.64 mm) thick.
2. Galvanized Steel: 0.040 in (1.0 mm) thick.

C. Miscellaneous Flashings:

1. Fabricate to cross section indicated with clips and accessories required for secure watertight installation. Meet recommendations of SMACNA for fabrication details and metal thicknesses.
2. Not-Exposed to Public View: Fabricate from the following materials:
   a. Galvanized Steel: 0.028 in (0.7 mm) thick.

3. Concealed from View by other Construction: Fabricate from the following materials:

   a. Stainless Steel: 0.025 in (0.64 mm) thick.

2.13 GENERAL FINISH REQUIREMENTS

A. Comply with NAAMM's "Metal Finishes Manual for Architectural and Metal Products" for recommendations for applying and designating finishes.

B. Protect mechanical and painted finishes on exposed surfaces from damage by applying a strippable, temporary protective covering before shipping.

C. Appearance of Finished Work: Noticeable variations in same piece are not acceptable. Variations in appearance of adjoining components are acceptable if they are within the range of approved Samples and are assembled or installed to minimize contrast.

PART 3 - EXECUTION

3.1 EXAMINATION

A. Acceptance of Surfaces and Conditions: Examine substrates to receive products and systems and associated work for compliance with requirements and other conditions affecting performance. Proceed only when unsatisfactory conditions have been corrected in a manner complying with Contract Documents. Starting work within a particular area will be construed as acceptance of surface conditions.

1. Verify compliance with requirements for installation tolerances of substrates.
2. Verify that substrate is sound, dry, smooth, clean, sloped for drainage, and securely anchored.
3. Verify that air- or water-resistant barriers have been installed over sheathing or backing substrate to prevent air infiltration or water penetration.

3.2 INSTALLATION, GENERAL

A. Installation Quality Standards: In addition to standards listed elsewhere, perform Work according to following, unless otherwise specified:

1. Respective manufacturer's written installation instructions.
2. Accepted submittals.
3. Contract Documents.

B. Pitch Pockets (aka Pitch Pans) at Roof Penetrations: Pitch pockets (aka pitch pans) at roofing penetrations are not allowed and will be considered non-conforming work. Refer to the drawings for allowable roof penetration details.

3.3 PREPARATION

A. General: Comply with manufacturer's instructions, recommendations, and specifications for cleaning and surface preparation. Surfaces shall have no defects, contaminants, or errors which would result in poor or potentially defective installation or would cause latent defects in Work.

3.4 UNDERLAYMENT INSTALLATION

A. Self-Adhering Sheet Underlayment: Install self-adhering sheet underlayment, wrinkle free. Prime substrate if recommended by underlayment manufacturer. Comply with temperature restrictions of underlayment manufacturer for installation; use primer for installing underlayment at low temperatures. Apply in shingle fashion to shed water, with end laps of not less than 6 in (150 mm) staggered 24 in (600 mm) between courses. Overlap side edges not less than 3-1/2 in (87 mm). Roll laps and edges with roller. Cover underlayment within 14 days.

B. If recommended by manufacturer, apply slip sheet, wrinkle free, before installing sheet metal flashing and trim.

3.5 SHEET METAL FLASHING AND TRIM INSTALLATION

A. General: Anchor sheet metal flashing and trim and other components of the Work securely in place, with provisions for thermal and structural movement. Use fasteners, solder, protective coatings, separators, sealants, and other miscellaneous items as required to complete sheet metal flashing and trim system.

1. Install sheet metal flashing and trim true to line, levels, and slopes. Provide uniform, neat seams with minimum exposure of solder, welds, and sealant.

    a. Provide uniform, neat seams with minimum exposure of solder and sealant.

2. Install sheet metal flashing and trim to fit substrates and to result in watertight performance. Verify shapes and dimensions of surfaces to be covered before fabricating sheet metal.
3. Space cleats not more than 12 in (300 mm) apart. Attach each cleat with at least two fasteners. Bend tabs over fasteners.
4. Install exposed sheet metal flashing and trim with limited oil canning, and free of buckling and tool marks.
5. Torch cutting of sheet metal flashing and trim is not permitted.
6. Do not use graphite pencils to mark metal surfaces.

B. Metal Protection: Where dissimilar metals contact each other, or where metal contacts pressure-treated wood or other corrosive substrates, protect against galvanic action or corrosion by painting contact surfaces with bituminous coating or by other permanent separation as recommended by sheet metal manufacturer or cited sheet metal standard.

1. Coat concealed side of uncoated-aluminum and stainless-steel sheet metal flashing and trim with bituminous coating where flashing and trim contact wood, ferrous metal, or cementitious construction.
2. Underlayment: Where installing sheet metal flashing and trim directly on cementitious or wood substrates, install underlayment and cover with slip sheet.
3. Asphalt Roofing Cement: Bed flanges in thick coat of asphalt roofing cement where required by manufacturer of sheet metal flashing materials and fabrications for waterproof performance.

C. Expansion Provisions: Provide for thermal expansion of exposed flashing and trim.

1. When ambient temperature at time of installation is between 40 deg F and 70 deg F (4 deg C and 21 deg C), set joint members for 50 percent movement each way. Adjust setting proportionately for installation at higher ambient temperatures.

D. Fasteners: Use fastener sizes that penetrate substrate not less than recommended by fastener manufacturer to achieve maximum pull-out resistance.

E. Conceal fasteners and expansion provisions where possible in exposed work and locate to minimize possibility of leakage. Cover and seal fasteners and anchors as required for a tight installation.

F. Seal joints as required for watertight construction.

1. Concealed Sealant Joints: Use sealant-filled joints at lap joints unless otherwise

indicated. Embed hooked flanges of joint members not less than 1 inch (25 mm) into sealant. Form joints to completely conceal sealant. When ambient temperature at time of installation is between 40 and 70 deg F (4 and 21 deg C), set joint members for 50 percent movement each way. Adjust setting proportionately for installation at higher ambient temperatures. Do not install sealant-type joints at temperatures below 40 deg F (4 deg C).

2. Exposed Sealant Joints: Prepare joints and apply sealants to comply with requirements in Section 079200 "Joint Sealants."

G. Soldered Joints: Clean surfaces to be soldered, removing oils and foreign matter. Pre-tin edges of sheets with solder to width of 1-1/2 in (38 mm); however, reduce pre-tinning where pre-tinned surface would show in completed Work.

1. Do not solder metallic-coated steel and aluminum sheet.
2. Do not use torches for soldering.
3. Heat surfaces to receive solder, and flow solder into joint. Fill joint completely. Completely remove flux and spatter from exposed surfaces.
4. Stainless-Steel Soldering: Tin edges of uncoated sheets, using solder for stainless steel and acid flux. Promptly remove acid flux residue from metal after tinning and soldering. Comply with solder manufacturer's recommended methods for cleaning and neutralization.
5. Copper Soldering: Tin edges of uncoated sheets, using solder for copper.

H. Rivets: Rivet joints in uncoated metals where necessary for strength.

3.6 ROOF-DRAINAGE SYSTEM INSTALLATION

A. General: Install sheet metal roof-drainage items to produce complete roof-drainage system according to cited sheet metal standard unless otherwise indicated. Coordinate installation of roof perimeter flashing with installation of roof-drainage system.

B. Hanging Gutters: Join sections with riveted and soldered joints or joints sealed with sealant. Provide for thermal expansion. Attach gutters at eave or fascia to firmly anchor them in position. Provide end closures and seal watertight with sealant. Slope to downspouts.

1. Fasten gutter spacers to front and back of gutter.
2. Anchor and loosely lock back edge of gutter to continuous cleat..
3. Anchor gutter with gutter brackets or straps spaced not more than 30 in (750 mm)] apart to roof deck, unless otherwise indicated, and loosely lock to front gutter bead.
4. Install gutter with expansion joints at locations indicated, but not exceeding, 50 ft (15.24 m) apart. Install expansion-joint caps.

C. Downspouts: Join sections with 1-1/2-in (38-mm) telescoping joints.

1. Provide hangers with fasteners designed to hold downspouts securely to walls and 1 in (25 mm) from walls. Locate hangers at top and bottom and at approximately 60 in (1500 mm) o.c.
2. Terminate downspouts as indicated on Drawings.

    a. Provide elbows at base of downspout to direct water away from building.
    b. Connect downspouts to underground drainage system.

D. Splash Pans: Install where downspouts discharge on low-slope roofs. Set in asphalt roofing cement or elastomeric sealant compatible with the substrate.

E. Parapet Scuppers: Continuously support scupper, set to correct elevation, and seal flanges to interior wall face, over cants or tapered edge strips, and under roofing membrane.

1. Exterior Wall: Anchor scupper closure trim flange to exterior wall and solder or seal with elastomeric sealant to scupper.
2. Exterior Wall and Conductor Head: Loosely lock front edge of scupper with conductor head.
3. Solder or seal with elastomeric sealant exterior wall scupper flanges into back of conductor head.

F. Conductor Heads: Anchor securely to wall, with elevation of conductor head rim at minimum of 1 in (25 mm) below scupper or gutter discharge.

G. Expansion-Joint Covers: Install expansion-joint covers at locations and of configuration indicated. Lap joints minimum of 4 in (100 mm) in direction of water flow.

3.7 ROOF FLASHING INSTALLATION

A. General: Install sheet metal flashing and trim to comply with performance requirements, sheet metal manufacturer's written installation instructions, and cited sheet metal standard. Provide concealed fasteners where possible, and set units true to line, levels, and slopes. Install work with laps, joints, and seams that are permanently watertight and weather resistant.

B. Roof Edge Flashing: Anchor to resist uplift and outward forces according to recommendations in cited sheet metal standard unless otherwise indicated. Interlock bottom edge of roof edge flashing with continuous cleat anchored to substrate.

C. Copings: Anchor to resist uplift and outward forces according to recommendations in cited sheet metal standard unless otherwise indicated.

1. Interlock exterior bottom edge of coping with continuous cleat anchored to substrate.
2. Anchor interior leg of coping as indicated on Drawings.

D. Pipe or Post Counterflashing: Install counterflashing umbrella with close-fitting collar with top edge flared for elastomeric sealant, extending minimum of 4 in (100 mm) over base flashing. Install stainless-steel draw band and tighten.

E. Counterflashing: Coordinate installation of counterflashing with installation of base flashing. Insert counterflashing in reglets or receivers and fit tightly to base flashing. Extend counterflashing 4 in (100 mm) over base flashing. Lap counterflashing joints minimum of 4 in (100 mm). Secure in waterproof manner by means of anchor and washer at 36 in (910 mm) centers unless otherwise indicated.

F. Roof-Penetration Flashing: Coordinate installation of roof-penetration flashing with installation of roofing and other items penetrating roof. Seal with sealant and clamp flashing to pipes that penetrate roof.

3.8 REGLET AND COUNTERFLASHING INSTALLATION

A. General: Coordinate installation of reglets and counterflashings with installation of base flashings. Secure in a waterproof manner by means of anchor and washer at 36 in (900 mm) centers.

B. Surface-Mounted Reglets: Install reglets to receive flashings where flashing without embedded reglets is indicated on Drawings. Install at height so that inserted counterflashings overlap 4 in (100 mm) over top edge of base flashings.

C. Counterflashings: Insert counterflashings into reglets or other indicated receivers; ensure that counterflashings overlap 4 in (100 mm) over top edge of base flashings. Lap counterflashing joints a minimum of 4 in (100 mm) and bed with elastomeric sealant. Fit counterflashings tightly to base flashings.

3.9 MISCELLANEOUS FLASHING INSTALLATION

A. Equipment Support Flashing: Coordinate installation of equipment support flashing with installation of roofing and equipment. Weld or seal flashing with elastomeric sealant to equipment support member.

B. Overhead-Piping Safety Pans: Suspend pans from structure above, independent of other overhead items such as equipment, piping, and conduit, unless otherwise indicated on Drawings. Pipe and install drain line to plumbing waste or drainage system.

3.10 ERECTION TOLERANCES

A. Installation Tolerances: Shim and align sheet metal flashing and trim within installed tolerance of 1/4 in in 20 ft (6 mm in 6 m) on slope and location lines indicated on Drawings and within 1/8 in (3mm) offset of adjoining faces and of alignment of matching profiles.

3.11 CLEANING AND PROTECTION

A. Clean exposed metal surfaces of substances that interfere with uniform oxidation and weathering.

B. Clean and neutralize flux materials. Clean off excess solder.

C. Clean off excess sealants.

D. Remove temporary protective coverings and strippable films as sheet metal flashing and trim are installed unless otherwise indicated in manufacturer's written installation instructions. On completion of sheet metal flashing and trim installation, remove unused materials and clean finished surfaces as recommended by sheet metal flashing and trim manufacturer. Maintain sheet metal flashing and trim in clean condition during construction.

E. Touchup Painting: Clean abraded or damaged areas of shop paint finish and paint exposed areas with the same material used for shop painting. Touchup finish is to match undamaged finish and extend into retained adjoining finish in a manner that will minimize evidence of touchup.

F. Replace sheet metal flashing and trim that have been damaged or that have deteriorated beyond successful repair by finish touchup or similar minor repair procedures.

3.12 FINISH SCHEDULE

A. Steel Sheet Finishes:
   1. Color and Gloss: Match color of adjacent building material, contingent upon approval by Architect.

B. Aluminum Sheet Finishes:
   1. Color and Gloss: Match color of adjacent building material, contingent upon approval by Architect.

END OF SECTION

SECTION 0 77200

ROOF ACCESSORIES

PART 1 - GENERAL

1.1 SUMMARY

A. Section Includes: Roof accessories and supplementary items necessary for installation of the following:

1. Roof curbs.
2. Equipment supports.
3. ~~Roof hatches~~.
4. Heat and smoke vents.
5. Rooftop pipe supports.
6. Precast concrete splash blocks.
7. ~~Snow guards~~.
8. ~~Snow and ice melt systems~~.

1.2 ACTION SUBMITTALS

A. Product Data: Manufacturer's technical literature for each product and system indicated.

1. Include manufacturer's specifications for materials, finishes, construction details, installation instructions, and recommendations for maintenance.

B. Shop Drawings: Show details of fabrication and installation, including plans, elevations, sections, details of components and attachments to other work. Distinguish between shop and field-assembled work. Indicate dimensions, loadings, and special conditions.

C. Samples for Initial Selection: Submit for each exposed product with factory-applied color finishes in each color and texture specified, prepared on Samples of size to adequately show color.

D. Samples for Verification Purposes: Submit for each type of exposed finish required, prepared on Samples in manufacturer's standard sizes, and of same thickness and material indicated for the Work. If finishes involve normal color or shade variations, include sample sets showing the full range of variations expected.

1.3 INFORMATIONAL SUBMITTALS

A. Field Quality Control Reports for Snow and Ice Melt System: Written report of testing and inspection required by "Field Quality Control".

B. Snow and Ice Melt System Manufacturer's Project Acceptance Document: Certification by the manufacturer that its products and systems are approved, acceptable, suitable for use in specific locations, for specific details, and for applications indicated, specified, or required, and that a warranty will be issued.

C. Qualification Data:

1. For firms and persons specified in "Quality Assurance" to demonstrate their capabilities and experience. Include list of completed projects.

D. Warranty: Sample of warranty.

1. Provide manufacturer's written warranty covering materials and installation (labor) stating obligations, remedies, limitations and exclusions.

1.4 CLOSEOUT SUBMITTALS

A. Maintenance Data: To include in maintenance manuals.

1.5 QUALITY ASSURANCE

A. Manufacturer Qualifications: Manufacturer with not less than 10 years of experience in the successful production and in-service performance of products and systems similar to scope of this Project.

B. Installer Qualifications for Snow and Ice Melt System:

1. Experience: Installer's personnel with not less than 5 years of experience in the successful performance of Work similar to scope of this Project.
2. Supervision: Installer shall maintain a competent supervisor at Project while the Work is in progress, and who has not less than 5 years of experience installing products and systems similar to scope of this Project.
3. Manufacturer Acceptance: Installer shall be certified, approved, licensed, or acceptable to manufacturer to install products.

1.6 PRE-INSTALLATION CONFERENCE

A. Pre-Installation Conference: Before Work begins, conduct conference at Project site.

1. Participants:

a. Architect.
b. Contractor, including superintendent.
c. Installer, including project manager and supervisor.
d. If requested, Manufacturer's qualified technical representative.
e. Installers of other construction interfaced with Work.

2. Minimum Agenda: Installer shall demonstrate understanding of the Work required by describing detailed procedures for preparing, installing, and cleaning the Work. Demonstration shall include, but not be limited to, following topics:

a. Tour representative areas of Work, inspect and discuss condition of substrate, and other preparatory work performed by other trades.
b. Review Contract Document requirements.
c. Review approved submittals.
d. Review inspection and testing requirements.
e. Review environmental conditions and procedures for coping with unfavorable conditions.
f. Resolve deviations or differences between Contract Documents and the manufacturer's specifications.

3. Record discussions, including decisions and agreements, and prepare report.

1.7 DELIVERY, STORAGE, AND HANDLING

A. Deliver roof accessories to Project site in original containers with seals unbroken and labeled with manufacturer's name, product brand name and type, and date of manufacture.

B. Protect roof accessories from physical damage and from deterioration by sunlight, moisture, soiling, and other sources. Store in a dry location. Comply with manufacturer's written instructions for handling, storing, and protecting during installation.

C. Handle, store, and install roof accessories in a manner to avoid permanent deflection of roof deck.

1.8 COORDINATION

A. Coordinate layout and installation of roof accessories with roofing membrane and base flashing and interfacing and adjoining construction to provide a leakproof, weathertight, secure, and noncorrosive installation.

B. Coordinate dimensions with rough-in information or Shop Drawings of equipment to be supported.

1.9 WARRANTY

A. Manufacturer's Warranty for Roof Hatches and Smoke Vents: Furnish manufacturer's written material warranty signed by an authorized representative using manufacturer's standard form agreeing to furnish materials required to repair or replace work which exhibits material defects caused by manufacture or design of product. "Defects" is defined to include but not limited to deterioration or failure to perform as required. Should a part fail to function in normal use within this period, manufacturer shall furnish a new part at no charge to the Owner.

1. Warranty Period: Manufacturer shall warrant the products to be free from material defects for a period of 5 years from date of Substantial Completion.

B. Manufacturer's Warranty for Snow and Ice Melt System: Furnish manufacturer's written material warranty signed by an authorized representative using manufacturer's standard form agreeing to furnish materials required to repair or replace work which exhibits material defects caused by manufacture or design of product. "Defects" is defined to include but not limited to deterioration or failure to perform as required.

1. Warranty Period: Manufacturer shall warrant the products to be free from material defects for a period of 2 years from date of Substantial Completion.

PART 2 - PRODUCTS

2.1 MANUFACTURERS

A. Acceptable Manufacturers and Products: Subject to compliance with requirements of Contract Documents as judged by the Architect, provide product by one of manufacturers listed. If not listed, submit as substitution according to the Conditions of the Contract and Division 01 Section "Substitution Procedures".

B. Available Manufacturers and Products: Subject to compliance with requirements of Contract Documents as judged by the Architect, manufacturers offering products that may be incorporated into the Work include, but are not limited to, those listed.

C. Basis of Design (Product Standard): Contract Documents are based on products and systems specified to establish a standard of quality. Other manufacturers offering products having equivalent characteristics may be considered, provided deviations are minor and comply with requirements of Contract Documents as judged by the Architect.

2.2 MATERIALS, GENERAL

A. Single Source Responsibility: Furnish each type of product from single manufacturer. Provide secondary materials only as recommended by manufacturer of primary materials.

2.3 PERFORMANCE REQUIREMENTS

A. General Performance: Installed roof accessories shall withstand exposure to weather and resist thermally induced movement without failure, rattling, leaking, or fastener disengagement due to defective manufacture, fabrication, installation, or other defects in construction.

B. Standards: Comply with the following:

1. SMACNA's "Architectural Sheet Metal Manual" details for fabrication of units, including flanges and cap flashing to coordinate with type of roofing indicated.
2. NRCA's "Roofing and Waterproofing Manual" details for installing units.

2.4 METAL MATERIALS

A. Zinc-Coated (Galvanized) Steel Sheet: ASTM A 653 / A 653M, G90 (Z275) coating designation.

B. Aluminum-Zinc Alloy-Coated Steel Sheet: ASTM A 792 / A 792M, AZ50 (AZM150) coated.

C. Steel Tube: ASTM A 500, round tube.

D. Galvanized-Steel Tube: ASTM A 500, round tube, hot-dip galvanized according to ASTM A 123 / A 123M.

E. Galvanized Steel Pipe: ASTM A 53/A 53M, hot-dip galvanized according to ASTM A 123 / A 123M.

2.5 MISCELLANEOUS MATERIALS

A. General: Provide materials and types of fasteners, protective coatings, sealants, and other miscellaneous items required by manufacturer for a complete installation.

B. Treated Wood Nailers: As specified in Division 06 Section "Miscellaneous Rough Carpentry".

C. Security Grilles: 3/4 in (19 mm) diameter, ASTM A 1011 / A 1011M steel bars spaced 6 in (150 mm) on center in one direction and 12 in (300 mm) on center in the other; factory finished as follows:

1. Surface Preparation: Remove mill scale and rust, if any, from uncoated steel, complying with SSPC-SP 5/NACE No. 1, "White Metal Blast Cleaning" or SSPC-SP 8, "Pickling".
2. Factory Priming for Field-Painted Finish: Apply shop primer specified below immediately after surface preparation and pretreatment.
3. Shop Primer: Manufacturer's or fabricator's standard, fast-curing, lead- and chromate-free, universal primer; selected for resistance to normal atmospheric corrosion, for compatibility with substrate and field-applied finish paint system indicated, and for capability to provide a sound foundation for field-applied topcoats under prolonged exposure.

D. Bituminous Paint: Cold-applied asphalt-mastic paint complying with SSPC-Paint 12 requirements except containing no asbestos, formulated for 30 mils (0.762 mm) thickness per coat.

E. Fasteners: Roof accessory manufacturer's recommended fasteners suitable for application and metals being fastened. Match finish of exposed fasteners with finish of material being fastened. Provide non-removable fastener heads to exterior exposed fasteners. Furnish the following unless otherwise indicated:

1. Fasteners for Zinc-Coated or Aluminum-Zinc Alloy-Coated Steel: Series 300 stainless steel or hot-dip zinc-coated steel according to ASTM A 153 / A 153M or ASTM F 2329.

F. Gaskets: Manufacturer's standard tubular or fingered design of neoprene, EPDM, PVC, or silicone or a flat design of foam rubber, sponge neoprene, or cork.

G. Elastomeric Sealant: ASTM C 920, elastomeric silicone polymer sealant as recommended by roof accessory manufacturer for installation indicated; low modulus; of type, grade, class, and use classifications required to seal joints and remain watertight.

H. Butyl Sealant: ASTM C 1311, single-component, solvent-release butyl rubber sealant; polyisobutylene plasticized; heavy bodied for expansion joints with limited movement.

I. Asphalt Roofing Cement: ASTM D 4586, asbestos free, of consistency required for application.

J. Underlayments:

1. Felt: ASTM D 226, Type II (No. 30), asphalt-saturated organic felt, nonperforated.
2. Polyethylene Sheet: 6 mils (0.15 mm) thick polyethylene sheet complying with ASTM D 4397.
3. Slip Sheet: Building paper, 3 lb/100 sf (0.16 kg/sm) minimum, rosin sized.

2.6 ROOF CURBS

A. Insulated Roof Curbs: Internally reinforced roof-curb units capable of supporting superimposed live and dead loads, including equipment loads and other construction indicated on Drawings; with welded or mechanically fastened and sealed corner joints, and integrally formed deck-mounting flange at perimeter bottom.

1. Manufacturers:

a. Custom Solution Roof and Metal Products.
b. Pate Company.
c. Roof Products, Inc.

d. Thybar Corporation.

B. Size: Coordinate dimensions with roughing-in information or Shop Drawings of equipment to be supported.

C. Material: Zinc-coated (galvanized) or aluminum-zinc alloy-coated steel sheet, 0.079 in (2 mm) thick. Factory prime coating finish.

D. Construction:

1. Insulation: Manufacturer's standard.
2. Liner: Same material as curb, of manufacturer's standard thickness and finish.
3. Factory-installed treated wood nailer at top of curb, continuous around curb perimeter.
4. On ribbed or fluted metal roofs, form deck-mounting flange at perimeter bottom to conform to roof profile.
5. Fabricate curbs to minimum height of 12 in (300 mm) unless otherwise indicated.
6. Top Surface: Level around perimeter with roof slope accommodated by sloping the deck-mounting flange.
7. Sloping Roofs: Where roof slope exceeds 1:48, fabricate curb with perimeter curb height tapered to accommodate roof slope so that top surface of perimeter curb is level. Equip unit with water diverter or cricket on side that obstructs water flow.
8. Security Grille: Provide where indicated.

2.7 EQUIPMENT SUPPORTS

A. Insulated Equipment Supports: Internally reinforced metal equipment supports capable of supporting superimposed live and dead loads, including equipment loads and other construction indicated on Drawings; with welded or mechanically fastened and sealed corner joints, and integrally formed deck-mounting flange at perimeter bottom.

1. Manufacturers:

a. Custom Solution Roof and Metal Products.
b. Pate Company.
c. Roof Products, Inc.
d. Thybar Corporation.

B. Size: Coordinate dimensions with roughing-in information or Shop Drawings of equipment to be supported.

C. Material: Zinc-coated (galvanized) or Aluminum-zinc alloy-coated steel sheet, 0.079 in (2 mm) thick. Factory prime coating finish.

D. Construction:

1. Insulation: Manufacturer's standard.
2. Liner: Same material as equipment support, of manufacturer's standard thickness and finish.
3. Factory-installed continuous treated wood nailers 3-1/2 in (87 mm) wide at tops of equipment supports.
4. Metal Counterflashing: Manufacturer's standard, removable, fabricated of same metal and finish as equipment support.

5. On ribbed or fluted metal roofs, form deck-mounting flange at perimeter bottom to conform to roof profile.
6. Fabricate equipment supports to minimum height of 12 in (300 mm) unless otherwise indicated.
7. Sloping Roofs: Where roof slope exceeds 1:48, fabricate each support with height to accommodate roof slope so that tops of supports are level with each other. Equip supports with water diverters or crickets on sides that obstruct water flow.

2.8 HEAT AND SMOKE VENTS

A. Heat and Smoke Vents: Manufacturer's standard, with double-walled insulated curbs, welded or mechanically fastened and sealed corner joints, integral condensation gutter, and cap flashing. Fabricate with insulated double-walled lid and continuous weathertight perimeter lid gaskets, and equip with automatic self-lifting mechanisms and UL-listed fusible links rated at 165 deg F (74 deg C) and coordinated with fire-suppression and smoke-detection systems.

1. Manufacturers:

    a. Acudor Products, Inc.
    b. Babcock-Davis.
    c. Bilco Company.
    d. Dur-Red Products.
    e. J.L. Industries, Inc.
    f. Milcor Inc.; Commercial Products Group of Hart & Cooley, Inc.
    g. Nystrom Building Products.

2. Type and Size: As indicated on the Drawings.
3. Loads: Minimum 40 lbf/sf (1.9 kPa) external live load and 30 lbf/sf (1.4 kPa) internal uplift load.

    a. When release is actuated, lid shall open against 10 lbf/sf (0.5 kPa) snow or wind load and lock in position.

4. Heat and Smoke Vent Standard: Provide units that have been tested and listed to comply with UL 793 and are FMG Approved.
5. Curb, Framing, and Lid Material: Zinc-coated (galvanized) or aluminum-zinc alloy-coated steel sheet, 0.079 in (2.01 mm) thick.
6. Construction:

    a. Insulation: Manufacturer's standard.
    b. Hatch Lid: Opaque, insulated, and double walled, with manufacturer's standard metal liner of same material and finish as outer metal lid.
    c. Exterior Curb Liner: Manufacturer's standard, of same material and finish as metal curb.
    d. Fabricate curbs to minimum height of 12 in (300 mm), unless otherwise indicated.
    e. Sloping Roofs: Where slope or roof deck exceeds 1:48, fabricate curb with perimeter curb height that is tapered to accommodate roof slope so that top surfaces of perimeter curb are level. Equip hatch with water diverter or cricket on side that obstructs water flow.
    f. Security Grille: Provide where indicated.

7. Hardware: Manufacturer's standard, corrosion resistant or hot-dip galvanized; with hinges, hold-open devices, and independent manual-release devices for inside and outside operation of lids.

2.9 ROOFTOP PIPE SUPPORTS

A. Rooftop Supports for Piping, Conduit, Cable Tray or Equipment: Installation without requiring roof penetrations, flashing, or damage to the roofing material. Support bases and pipe rollers made of an engineered thermoplastic with appropriate additives for UV protection. All structural steel components hot-dipped galvanized. Height-adjustable supports must be used where necessary. The support shall have a continuous bottom surface to provide even load distribution and minimize point loading of the roof membrane. Support base to have radiused edge to enhance compatibility with roof membranes.

1. Load Capacity: Up to 1,500 lbs (680 kg).

B. The rooftop strut support shall provide a fixed-height mounting platform of 4 or 6 inches (100 or 150 mm) off of the roof and a usable strut length of up to 10 or 16 inches (250 or 400 mm).

C. The adjustable-height strut support shall allow elevations changes of up to 16 inches (400 mm) off of the roof and a usable strut length of up to 10 or 16 inches (250 or 400 mm).

D. The rooftop roller support shall provide roller capacity for up to nominal 6 inches (150 mm) steel pipe with a minimum 5-1/2 inches (138 mm) fixed height off of the roof.

E. The adjustable-height roller support shall provide roller capacity for up to nominal 6 inches (150 mm) steel pipe and accommodate elevation changes of up to 16 inches (400 mm) off of the roof. The rollers shall be polymeric. The roller axle, fittings and other hardware shall be manufactured of hot-dipped galvanized steel.

F. Basis of Design: ERICO International Corporation; ST Series, Strut-based Thermoplastic Supports.

2.10 PRECAST CONCRETE SPLASH BLOCKS

A. Prefabricated units of reinforced Portland cement concrete, aggregates, admixtures, and water; shaped to divert water away from building. Minimum size: 12 in (300 mm) by 24 in (600 mm) by 3 in (75 mm) high. Weight: 50 lbs (22.6 kg). Provide protection layer below splash block to protect roofing system.

~~2.11 SNOW GUARDS~~

~~A. Snow Guards, General: Prefabricated, noncorrosive units designed to be installed without penetrating roofing system; complete with predrilled holes, clamps, or hooks for anchoring. Snow guards materials and mounting method shall be fully compatible with adjacent roofing system to avoid any damage or penetrations which may compromise the integrity of the system.~~

~~B. Surface-Mounted, Plastic, Stop-Type Snow Guards: Clear polycarbonate stops designed for attachment to panel surface of roofing system using construction adhesive, silicone or polyurethane sealant, or adhesive tape.~~

C. ~~Surface-Mounted, Metal, Stop-Type Snow Guards: Cast-aluminum stops designed for attachment to panel surface of roofing system using construction adhesive, silicone or polyurethane sealant, or adhesive tape.~~

D. ~~Seam-Mounted, Stop-Type Snow Guards: Cast-aluminum stops designed for attachment to vertical ribs of standing-seam sheet metal roofing with stainless-steel set screws.~~

E. ~~Seam-Mounted, Bar-Type Snow Guards: Rail- or fence-type assembly consisting of mill-finished aluminum or stainless-steel rods, bars, or pipe held in place by stainless-steel clamps attached to vertical ribs of standing-seam sheet metal roofing.~~

F. ~~Surface-Mounted, Copper, Stop-Type Snow Guards: Bronze-alloy stops designed for attachment to panel surface of copper roofing using solder.~~

G. ~~Manufacturers:~~

1. ~~Alpine SnowGuards, a division of Vermont Slate & Copper Services, Inc.~~
2. ~~Berger Building Products.~~
3. ~~Chemlink, Inc.~~
4. ~~LMCurbs~~
5. ~~Polar Blox.~~
6. ~~Precision Molding Co., Inc.~~
7. ~~Snoblox / Snojax Inc.~~
8. ~~Sno-Gem, Inc.~~
9. ~~TRA Mage Inc.~~
10. ~~Zaleski Snow-Guards & Roofing Specialties~~

2.12 GENERAL FINISH REQUIREMENTS

A. Comply with NAAMM's "Metal Finishes Manual for Architectural and Metal Products" for recommendations for applying and designating finishes.

B. Appearance of Finished Work: Noticeable variations in same piece are not acceptable. Variations in appearance of adjoining components are acceptable if they are within the range of accepted Samples and are assembled or installed to minimize contrast.

2.13 GALVANIZED STEEL SHEET FINISHES

A. Surface Preparation: Clean surfaces with nonpetroleum solvent so surfaces are free of oil and other contaminants. After cleaning, apply a conversion coating suited to the organic coating to be applied over it. Clean welds, mechanical connections, and abraded areas, and apply galvanizing repair paint specified below to comply with ASTM A 780.

1. Galvanizing Repair Paint: High-zinc-dust-content paint for regalvanizing welds in steel, complying with SSPC-Paint 20.

B. Baked-Enamel or Powder-Coat Finish: Immediately after cleaning and pretreating, apply manufacturer's standard two-coat, baked-on finish consisting of prime coat and thermosetting topcoat, with a minimum dry film thickness of 1 mil (0.025 mm) for topcoat. Comply with coating manufacturer's written instructions for applying and baking to achieve a minimum dry film thickness of 2 mils (0.05 mm).

1. Color and Gloss: As selected by Architect from manufacturer's full range.

2. Color: As scheduled or as indiciated in Design Selections.
3. Baked-Enamel:

C. Factory Prime Coating: Where field painting is indicated, apply pretreatment and white or light-colored, factory-applied, baked-on epoxy primer coat, with a minimum dry film thickness of 0.2 mil (0.005 mm).

PART 3 - EXECUTION

3.1 EXAMINATION

A. Acceptance of Surfaces and Conditions: Examine substrates to receive products and systems and associated work for compliance with requirements and other conditions affecting performance. Proceed only when unsatisfactory conditions have been corrected in a manner complying with Contract Documents. Starting work within a particular area will be construed as acceptance of surface conditions.

3.2 INSTALLATION, GENERAL

A. Installation Quality Standards: In addition to standards listed elsewhere, perform Work according to following, unless otherwise specified:

1. Respective manufacturer's written installation instructions.
2. Accepted submittals.
3. Contract Documents.

B. Control of Corrosion: Prevent galvanic action and other forms of corrosion by isolating metals and other materials from direct contact with incompatible materials.

3.3 PREPARATION

A. General: Comply with manufacturer's instructions, recommendations, and specifications for cleaning and surface preparation. Surfaces shall have no defects, contaminants, or errors which would result in poor or potentially defective installation or would cause latent defects in **Work.**

3.4 INSTALLATION OF ROOF ACCESSORIES

A. General: Install and securely anchor roof accessories directly to structural supporting deck or substrate (not on top of wood blocking) so they are capable of resisting indicated loads.

1. Install roof accessories level, plumb, true to line and elevation, and without warping, jogs in alignment, excessive oil canning, buckling, or tool marks.
2. Use fasteners, separators, sealants, and other miscellaneous items as required to complete installation of roof accessories and fit them to substrates.
3. Install roof accessories to resist exposure to weather without failing, rattling, leaking, or loosening of fasteners and seals.

B. Metal Protection: Protect metals against galvanic action by separating dissimilar metals from contact with each other or with corrosive substrates by painting contact surfaces with bituminous paint or by other permanent separation as recommended by manufacturer.

1. Underlayments: Where installing roof accessories directly on cementitious or wood substrates, install a course of felt underlayment and cover with a slip sheet, or install a course of polyethylene sheet.
2. Bed flanges in thick coat of asphalt roofing cement where required by manufacturers of roof accessories for waterproof performance.

C. Roof Curb Installation: Install each roof curb so top surface is level, unless otherwise indicated.

D. Equipment Support Installation: Install equipment supports so top surfaces are level with each other.

~~E. Roof-Hatch Installation:~~

~~1. Install roof hatch so top surface of hatch curb is level, unless otherwise indicated.~~
~~2. Verify that roof hatch operates properly. Clean, lubricate, and adjust operating mechanism and hardware.~~
~~3. Attach safety railing system to roof-hatch curb.~~
~~4. Attach ladder-assist post according to manufacturer's written instructions.~~

F. Heat and Smoke Vent Installation:

1. Install heat and smoke vent so top perimeter surfaces are level.
2. Install and test heat and smoke vents and their components for proper operation according to NFPA 204.

G. Operational Units: Test-operate units with operable components. Clean and lubricate joints and hardware. Adjust for proper operation.

H. Rooftop Pipe Support Installation: Comply with MSS SP-58 and MSS SP-89. Install supports and attachments as required to properly support piping. Arrange for grouping of parallel runs of horizontal piping, and support together.

1. Provide complete and adequate support of all piping and conduit, whether or not all required devices are shown.
2. The use of wood for supporting piping is NOT permitted.
3. Provide supports spaced so deflection of piping does not exceed 1/240 of span.
4. Isolation Pads: Consult manufacturer of existing or new roofing system as to the type of isolation pads required between the roof and support. Set isolation pads in adhesive if required by manufacturer's instructions. Place supports on isolation pads.

I. Precast Concrete Splash Blocks: Install splash block at outlet locations of downspouts. Set splash block over protection layer to protect roofing system.

~~J. Stop-Type Snow Guards: Attach snow guards to roofing system with adhesive or adhesive tape, as recommended by manufacturer. Do not use fasteners that will penetrate roofing system. Install snow guards in layout, spacing, and pattern indicated on the Drawings.~~

~~K. Bar-Type Snow Guards: Attach bar supports to vertical ribs of metal roofing system with clamps or set screws. Do not use fasteners that will penetrate roofing system. Install snow guards in layout, spacing, and pattern indicated on the Drawings.~~

L. Snow and Ice Melt Systems: Install in accordance with manufacturer's written installations at layout, spacing, pattern and locations indicated on the Drawings. Coordinate the complete

snow and ice melt system installation with the gutter, roofing, and flashing installations.

3.5 FIELD QUALITY CONTROL

A. Manufacturer's Field Service: Manufacturer's qualified technical representative shall periodically inspect Work to ensure installation is proceeding in accordance with manufacturer's designs, recommendations, instructions, and warranty requirements. Representative shall submit written reports of each visit indicating observations, findings, and conclusions of inspection.

1. Manufacturer's Technical Representative Qualifications: Direct employee of technical services department of manufacturer with experience in providing recommendations, observations, evaluations, and problem diagnostics.

3.6 REPAIR AND CLEANING

A. Galvanized Surfaces: Clean field welds, bolted connections, and abraded areas and repair galvanizing according to ASTM A 780.

B. Clean exposed surfaces according to manufacturer's written instructions.

C. Clean off excess sealants.

D. Replace roof accessories that have been damaged or that cannot be successfully repaired by finish touchup or similar minor repair procedures.

E. Touch up factory-primed surfaces with compatible primer ready for field painting according to Division 09 painting Sections.

END OF SECTION

SECTION 078116

SPRAYED FIRE-RESISTIVE MATERIALS

PART 1 - GENERAL

1.1 SUMMARY

A. Section Includes: Sprayed fire-resistive materials (SFRM) and supplementary items necessary for installation.

1.2 DEFINITIONS

A. SFRM: Sprayed Fire-Resistive Materials.

B. Concealed: Not visible; hidden by other construction.

C. Exposed: Visible, not hidden by other construction.

D. Direct Moisture: Exposed to wetness, surfaces normally soaked, saturated or regularly exposed to water and or moisture.

1.3 ACTION SUBMITTALS

A. Fire-Rated Assembly Design Classification: Submit documentation issued by testing agency for each fire-rated assembly design selected.

B. Product Data: Manufacturer's technical literature for each product and system indicated.

1. Include manufacturer's specifications for materials, finishes, construction details, installation instructions, and recommendations for maintenance.

C. Shop Drawings: Show details of fabrication and installation, including plans, elevations, sections, details of components and attachments to other work. Distinguish between shop and field-assembled work.

1. Source: Submit one of following:

a. Shop drawings specifically prepared by fire-resistive materials applicator with required information.
b. Structural steel fabricator's erection plans with required information hand-marked and color-coded.

2. Required Information:

a. Show requirements for steel surface preparation.
b. Identify locations for each fire-rated assembly design selected.
c. Indicate minimum fire-resistive material thicknesses needed to achieve required fire-ratings for each structural member.

1.4 INFORMATIONAL SUBMITTALS

A. Manufacturer's Project Acceptance Document: Certification by the manufacturer that its product(s) are approved, acceptable, suitable for use in specific locations, for specific details, and for applications indicated, specified, or required, and that a warranty will be issued.

B. Product Test Reports: Written reports based on evaluation of comprehensive tests performed by qualified testing agency indicating that each product complies with requirements.

C. Qualification Data:

1. For firms and persons specified in "Quality Assurance" to demonstrate their capabilities and experience. Include list of completed projects.

D. Compatibility and Adhesion Test Reports: Submit indicating fire-resistive material components, including primers, have been tested for bond with steel substrates and between each other.

E. Patching Plan: Submit written plan detailing materials and methods to be used for patching of fire-resistive materials damaged during construction.

1.5 QUALITY ASSURANCE

A. Manufacturer Qualifications: Manufacturer with not less than 5 years of experience in the successful production and in-service performance of products and systems similar to scope of this Project.

B. Installer Qualifications:

1. Experience: Installer's personnel with not less than 5 years of experience in the successful performance of Work similar to scope of this Project.
2. Supervision: Installer shall maintain a competent supervisor at Project while the Work is in progress, and who has not less than 5 years of experience installing products and systems similar to scope of this Project

C. Test for bond according to ASTM E 736 and requirements in UL's "Fire Resistance Directory" for fire-resistive materials.

D. Verify that manufacturer, through its own laboratory testing or field experience, has not found primers to be incompatible with fire-resistive materials.

E. Fire-Test-Response Characteristics: Provide fire-resistive materials with fire-test-response characteristics indicated, as determined by testing identical products according to test method by testing agency indicated below, or listing of other testing agency acceptable to authorities having jurisdiction. Identify bags containing fire-resistive materials with appropriate markings of applicable testing and inspecting agency.

F. Fire-Resistance Ratings: Tested according to UL 263/ASTM E 119/NFPA 251 under Category CHPX published in UL's "Fire Resistance Directory" for Spray-Applied Fire-Resistive Materials.

G. Surface-Burning Characteristics: When tested according to ASTM E 84:

1. Flame Spread: Less than 25.
2. Smoke Developed: Less than 450.

1.6 PRE-INSTALLATION CONFERENCE

A. Pre-Installation Conference: Before Work begins, conduct conference at Project site.

1. Participants:

   a. Architect.
   b. Contractor, including superintendent.
   c. Installer, including project manager and supervisor.
   d. If requested, Manufacturer's qualified technical representative.
   e. Installers of other construction interfaced with Work.

2. Minimum Agenda: Installer shall demonstrate understanding of the Work required by describing detailed procedures for preparing, installing, and cleaning the Work. Demonstration shall include, but not be limited to, following topics:

   a. Tour representative areas of Work, inspect and discuss condition of substrate, and other preparatory work performed by other trades.
   b. Review Contract Document requirements.
   c. Review approved submittals.
   d. Review inspection and testing requirements.
   e. Review environmental conditions and procedures for coping with unfavorable conditions.
   f. Resolve deviations or differences between Contract Documents and the manufacturer's specifications.

3. Record discussions, including decisions and agreements, and prepare report.

1.7 PROJECT CONDITIONS

A. Environmental Requirements: Comply with manufacturer's recommendations for temperature and ventilation requirements during and after application.

B. Work Sequence Requirements:

1. Metal Floor Deck: Apply fire-resistive materials after concrete topping has been completed.
2. Metal Roof Deck: Apply fire-resistive materials after concrete topping and roofing installation has been completed.
3. Personnel Traffic: Prohibit on floor and roof above during application and drying of fire-resistive materials.
4. Accessories: Apply fire-resistive materials after steel stud framing, clips, hangers, supports, sleeves, and other items are in place.
5. Suspended Components: Defer installing ducts, piping, and other items that would interfere with applying fire-resistive materials until after application.

C. Protection During Work: Provide temporary enclosure as required for following:

1. Confine spraying operations and protect environment.
2. Prevent deterioration of fire-resistive materials due to exposure to weather and to unfavorable ambient conditions for humidity, temperature, and ventilation.
3. Prevent unnecessary abrasion and other damage likely to occur during construction operations subsequent to application.

1.8 COORDINATION

A. Coordinate installation of products and systems with interfacing and adjoining construction to provide a successful installation without failure.

1.9 WARRANTY

A. Installer's Warranty: Furnish installer's written workmanship warranty signed by an authorized representative using installer's standard form agreeing to provide labor required to repair or replace work which exhibits workmanship defects. "Defects" is defined to include but not limited to deterioration or failure to perform as required.

1. Coverage of warranty includes but is not limited to the following:

   a. Defects or deterioration.
   b. Cracking, flaking, or spalling.
   c. Peeling or delaminating from substrates.
   d. Failure to remain bonded.
   e. Erosion in excess of specified requirements.
   f. Faulty application.

2. Exclusions: Not covered are failures due, but not limited to, following:

   a. Damage by occupants and Owner's maintenance personnel.
   b. Exposure to environmental conditions other than those investigated and approved during fire-response testing.
   c. Other causes not reasonably foreseeable under conditions of normal use.

3. Warranty Period: Installer shall warrant the installation to be free from workmanship Defects for a period of 2 years from date of Substantial Completion.

PART 2 - PRODUCTS

2.1 MANUFACTURERS AND PRODUCTS

A. Acceptable Manufacturers and Products: Subject to compliance with requirements of Contract Documents as judged by the Architect, provide product by one of manufacturers listed. If not listed, submit as substitution according to the Conditions of the Contract and Division 01 Section "Substitution Procedures".

B. Available Manufacturers and Products: Subject to compliance with requirements of Contract Documents as judged by the Architect, manufacturers offering products that may be incorporated into the Work include, but are not limited to, those listed.

2.2 MATERIALS, GENERAL

A. Single Source Responsibility: Furnish each type of product from single manufacturer. Provide secondary materials only as recommended by manufacturer of primary materials.

2.3 PRIMARY MATERIALS

A. Fire-Rated Assembly Design: Selected from Product Category BXUV published in UL's "Fire Resistance Directory" for sprayed fire-resistive materials, or design of other testing agency acceptable to authorities having jurisdiction.

B. Material Compatibility: Primer and sprayed fire-resistive materials shall be compatible with one another and with substrates indicated under conditions of service and application, as demonstrated by manufacturer based on testing and laboratory analysis.

C. Sprayed Fire-Resistive Material: Manufacturer's standard, factory-mixed, lightweight, dry formulation, complying with indicated fire-resistance design.

1. Products mixed at Project site to form a slurry or mortar before conveyance and application.
2. Absence of Asbestos: Containing no detectable asbestos as determined according to method specified in 40 CFR 763, Subpart E, Appendix E, and Section 1.

D. Minimum Physical Properties: Following values unless higher value required by fire-rated assembly design selected.

E. Minimum Dry Density: Average and individual densities, unless density indicated in fire-rated assembly design selected is greater according to ASTM E 605:

1. Low-Density – Gypsum Binder: 15 pcf (240 k/cu m).
2. Medium-Density - Gypsum Binder: 18 pcf (288 k/cu m).
3. Medium-Density – Cement Binder: 22 pcf (352 k/cu m).
4. High-Density – Cement Binder: 40 pcf (640 k/cu m).

F. Thickness: Minimum average thickness as required by fire-rated assembly design selected according to ASTM E 605.

G. Minimum Bond Strength: As follows according to ASTM E 736:

1. Buildings Under 75 ft (22.5 m) in Height: 150 psf (7 kPa).
2. Buildings Between 75 and 420 ft (126 m) in Height: 430 psf (21 kPa).
3. Buildings Over 420 ft (126 m) in Height: 1,000 psf (48 kPa).

H. Corrosion Resistance: No evidence of corrosion according to ASTM E 937.

I. Deflection: No cracking, spalling, or delamination according to ASTM E 759.

J. Effect of Impact on Bonding: No cracking, spalling, delamination, per ASTM E 760.

K. Air Erosion: Maximum weight loss of 0.025 grams per square foot in 24 hours according to ASTM E 859.

L. Combustion Characteristics: Passes ASTM E 136 or ASTM E 1354.

M. Fungal Resistance: No observed growth on specimens according to ASTM G 21.

N. Signal Color for Renovation Work: Incorporate dye in mix to distinguish new work from existing coated surfaces.

2.4 SPRAYED-FIRE RESISTIVE MATERIALS

A. SFRM-01 - Low-Density; minimum bond strength of 150 psf (7 kPa).

1. Interior Locations: Unless a higher bond strength SFRM is scheduled below.

a. Concealed conditions for buildings under 75 ft (22.5 m) in height.

2. Manufacturers and Products:

a. Carboline Co., Fireproofing Products Div.; Pyrolite 15 or Pyrolite 15 High-Yield.
b. Grace Construction Products; Monokote MK-6.
c. Isolatek International; Cafco 300 or Cafco 300 AC.
d. Southwest Fireproofing Products Co.; Type 5GP.

B. SFRM-02:

1. Interior Locations: Unless a higher bond strength SFRM is scheduled below.

a. Concealed conditions for buildings between 75 ft (22.5 m) and 420 ft (126 m) in height.
b. Exposed conditions for buildings under 420 ft (126 m) in height.

2. Low-Density; minimum bond strength of 430 psf (21 kPa):

a. Grace Construction Products; Monokote MK-10HB.
b. Isolatek International; Cafco 300HS.

3. Medium Density; minimum bond strength of 430 psf (21 kPa):

a. Carboline Co., Fireproofing Products Div.; Pyrolite 22.
b. Grace Construction Products; Monokote Z106G.
c. Isolatek International; Cafco 400 AC.
d. Southwest Vermiculite Co., Inc.; Type 5MD.

C. SFRM-03:

1. Interior Locations: Unless a higher bond strength SFRM is scheduled below.

a. Concealed conditions for buildings over 420 ft (126 m) in height.
b. Exposed conditions for buildings over 420 ft (126 m) in height.

2. Medium-Density; minimum bond strength of 1,000 psf (48 kPa):

a. Carboline Co., Fireproofing Products Div.; Type 7GP.
b. Grace Construction Products; Monokote Z106/HY or MK-1000HB.
c. Isolatek International; Cafco 400 or Cafco 3000.
d. Southwest Fireproofing Products Co., Inc.; Type 7GP.

D. SFRM-04 - Medium Density, Portland Cement Binder; minimum bond strength of 1,000 psf (48 kPa):

1. Interior Locations: Unless a higher bond strength SFRM is scheduled below.

a. Exposed columns.
b. Exposed structure in mechanical/electrical rooms and elevator shafts.
c. Exposed conditions subject to abrasion or humidity.

2. Manufacturers and Products:

a. Carboline Co., Fireproofing Products Div.; Pyrolcrete 239.
b. Grace Construction Products; Monokote Z106/HY.
c. Isolatek International; Cafco 400.
d. Southwest Fireproofing Products Co., Inc.; Type 7GP.

E. SFRM-05 - High-Density, Portland Cement Binder; minimum bond strength of 10,000 psf (480 kPa).

1. Interior or Exterior Locations:

a. Exterior conditions.
b. Exposed conditions subject to impact or direct moisture.

2. Manufacturers and Products:

a. Carboline Co., Fireproofing Products Div.; Pyrocrete 40.
b. Grace Construction Products; Monokote Z146.
c. Isolatek International; Fendolite M-II.
d. Southwest Vermiculite Co., Inc.; 7HD.

F. SFRM-R - Low-Density; minimum bond strength of 150 psf (7 kPA):

1. Interior Locations:

a. Renovation work and previously coated surfaces for buildings under 75 ft (22.5 m) in height.

2. Manufacturers and Products:

a. Carboline Co., Fireproofing Products Div.; Retrolite 15.
b. Grace Construction Products; Retro-Guard RG.
c. Isolatek International; Cafco 300 SB.

2.5 AUXILIARY MATERIALS

A. General: Provide auxiliary materials compatible with fire-resistive materials and substrates approved by UL or another testing and inspecting agency acceptable to authorities having jurisdiction for use in fire-rated assembly design selected.

B. Bonding Adhesive: If required, product provided by fire-resistive materials manufacturer for enhancing bond between substrate and fire-resistive materials.

C. Patching Material: Product provided by fire-resistive materials manufacturer for patching damaged work.

D. Substrate Conditioner Coating: If required, product provided by fire-resistive materials manufacturer for coating substrate prior to application complying with one of following:

1. Bond strength complies with requirements specified in UL's "Fire Resistance Directory" for coating materials based on series of bond tests according to ASTM E 736.
2. Identical to those used in approved fire-rated assembly design.

E. Reinforcements: One of following materials fabricated of weight, configuration, and finish required to comply with fire-rated assembly design selected and manufacturer's written recommendations; include clips, accessories, and other anchorage devices required to attach reinforcement to substrates scheduled to receive fire-resistive materials:

1. Expanded metal lath.
2. Steel pins.
3. Glass fiber or polypropylene fabric mesh.

F. Sealer: Provide where required, suitable for application over applied sprayed fire-resistive material; of type recommended in writing by fireproofing manufacturer for each fire-resistive design.

G. Topcoat: Provide where required, suitable for application over applied sprayed fire-resistive material; of type recommended in writing by fireproofing manufacturer for each fire-resistive design.

PART 3 - EXECUTION

3.1 EXAMINATION

A. Acceptance of Surfaces and Conditions: Examine substrates to receive products and systems and associated work for compliance with requirements and other conditions affecting performance. Proceed only when unsatisfactory conditions have been corrected in a manner complying with Contract Documents. Starting work within a particular area will be construed as acceptance of surface conditions.

3.2 INSTALLATION, GENERAL

A. Installation Quality Standards: In addition to standards listed elsewhere, perform Work according to following, unless otherwise specified:

1. Respective manufacturer written installation instructions.
2. Accepted submittals.
3. Contract Documents.

B. Control of Corrosion: Prevent galvanic action and other forms of corrosion by isolating metals and other materials from direct contact with incompatible materials.

3.3 PREPARATION

A. General: Comply with manufacturer's instructions, recommendations, and specifications for cleaning and surface preparation. Surfaces shall have no defects, contaminants, or errors which would result in poor or potentially defective installation or would cause latent defects in Work.

1. Protection of Adjacent Work: Cover other work subject to damage from fallout or overspray of fire-resistive materials during application.

B. Substrate Conditions: Coordinate substrate preparations with Division 05 Section "Structural Steel".

1. Clean substrates of substances that have potential of impairing bond of fire-resistive materials, including dirt, oil, grease, release agents, rolling compounds, loose mill scale, incompatible primers, paints, identification markings, and encapsulants as recommended by fire-resistive material manufacturer.
2. Objects penetrating fire-resistive materials, including clips, hangers, support sleeves, and similar items, are securely attached to substrates.
3. Substrates are not obstructed by ducts, piping, equipment, walls, and other suspended construction that will interfere with application of fire-resistive materials.
4. If steel has been coated with paint or primer, manufacturer shall determine if paint or primer has to be removed, or if fire-resistive materials can be applied without removal. If additional materials are required, include at no additional cost to Owner.

C. Substrate Repair for Exposed Applications: Remove surface imperfections that could affect uniformity of texture and thickness in finished surface of fire-resistive materials. Remove minor projections and fill voids that would telegraph through fire-resistive materials after application.

3.4 INSTALLATION

A. Application Procedures: Apply fire-resistive materials in thicknesses and densities required to achieve each fire-rated assembly design selected.

1. Comply with manufacturer's written instructions for mixing materials, application procedures, and types of equipment used to mix, convey and spray fire-resistive materials, as applicable to particular conditions of installation and as required to achieve fire-rated assembly design selected.
2. Where required, coat substrates with bonding adhesive or substrate primers before applying fire-resistive materials.
3. Spray fire-resistive materials to maximum extent possible, then complete coverage by trowel application or other placement method recommended in writing by manufacturer.
4. Maintain profile of substrates.

    a. Reinforcement: Do not maintain profile of substrates where fire-resistive rating requires covering with reinforcement.

5. Fill voids between members, including voids formed by corrugated and fluted decks above beams and similar voids.
6. Reinforcement: Install reinforcement to comply with fire-rated assembly design selected and fire-resistive materials manufacturer's written recommendations for conditions of exposure and intended use. Securely attach to substrate in position required for support and reinforcement of fire-resistive materials. Use anchorage devices of type recommended in writing by fire-resistive materials manufacturer. Attach accessories where indicated or required for secure attachment to substrate.
7. Exposed Applications: Provide uniform finish that is equivalent to approved mock-up.
8. Cure fire-resistive materials according to fire-resistive materials manufacturer requirements.

B. Patching: Under following conditions, remove sprayed fire-resistive materials and re-apply same sprayed fire-resistive materials as used for original application, or apply patching material:

1. Portions damaged, abraded, or removed by subsequent building construction.
2. Previously applied materials determined by testing and inspection agency to be noncompliant.

C. Sealers or Topcoats: Apply where required and as recommended in writing by fireproofing manufacturer for each application and fire-resistive design.

3.5 FIELD QUALITY CONTROL

A. Manufacturer's Field Service: Manufacturer's qualified technical representative shall periodically inspect Work to ensure installation is proceeding in accordance with manufacturer's designs, recommendations, instructions, and warranty requirements. Representative shall submit written reports of each visit indicating observations, findings, and conclusions of inspection.

1. Manufacturer's Technical Representative Qualifications: Direct employee of technical services department of manufacturer with experience in providing recommendations, observations, evaluations, and problem diagnostics.

B. Testing and Inspection Services: Owner will engage a qualified independent testing and inspection agency to perform field tests and inspections and to prepare test reports.

C. Perform the tests and inspections of completed Work in successive stages. Do not proceed with application of fireproofing for the next area until test results for previously completed applications of fireproofing show compliance with requirements. Tested values must equal or exceed values as specified and as indicated and required for approved fire-resistance design.

1. Agency Responsibilities:

a. Agency personnel performing tests and inspections shall have not less than 3 years of experience in conducting field testing procedures.
b. Perform following tests and inspections according to local building code; if no building code requirements perform tests according to AWCI Technical Manual 12-A.
c. Required Testing and Inspections:

1) Substrate Condition: Inspect to determine if substrates are prepared properly and comply with specified requirements; determine if substrate temperature at time of application is acceptable.
2) Site Conditions during Application: Determine if temperature, humidity and other weather conditions comply with specified requirements.
3) Test and inspect as required by Chapter 17 of the applicable building code entitled "Sprayed Fire-Resistant Materials".
4) Patching: Inspect to determine if damaged substrates are properly patched to comply with approved fire-rated assembly design and approved patching plan submittal.

d. Reports shall contain not less than the information required by AWCI Technical Manual 12-A.
e. Interpret tests and inspections and state in each report whether applications comply with or deviate from specified requirements including, but not limited to, manufacturers product data and approved fire-rated assembly design.
f. If applications are found not in compliance with specified requirements perform additional random testing to determine extent of noncompliance at Contractor's expense.
g. Perform testing and inspecting to determine compliance of replaced, or additional work necessary because of noncompliant areas, with specified requirements at Contractor's expense.

2. Contractor's Responsibilities:

    a. Proceed with application for next area only when test and inspection results for previously completed applications show compliance with specified requirements. Tested values must equal or exceed values required for each approved fire-rated assembly design.
    b. Remove and replace applications where test and inspection results indicate it does not comply with specified requirements.
    c. Apply additional fire-resistive materials where test and inspection results indicate application does not comply with specified requirements.
    d. Additional testing and inspecting will be performed to determine compliance of replaced or additional work with specified requirements at Contractor's expense.

D. Fireproofing will be considered defective if it does not pass tests and inspections.

1. Remove and replace fireproofing that does not pass tests and inspections, and retest at Contractor's expense.
2. Apply additional fireproofing, per manufacturer's written instructions, where test results indicate insufficient thickness, and retest at Contractor's expense.

E. Prepare test and inspection reports.

3.6 PROTECTION

A. Protection: Protect fire-resistive materials from abrasion and damage resulting from construction operations or other causes so fire protection will be without damage or deterioration at time of substantial completion.

3.7 REPAIR

A. Coordination: Coordinate application of fire-resistive materials with other construction to minimize need to cut or remove fire protection. As installation of other construction proceeds, inspect fire-resistive materials and patch any damaged or removed areas. Repair or replace work that has not been successfully protected.

END OF SECTION

SECTION 07 8413

PENETRATION FIRESTOPPING

PART 1 - GENERAL

1.1 SUMMARY

A. This Section includes penetration firestopping systems for openings and penetrations through smoke and fire-resistance-rated assemblies, and supplementary items necessary to complete their installation.

1.2 ACTION SUBMITTALS

A. Product Data: Manufacturer's technical literature for each product and system indicated.

1. Include manufacturer's specifications for materials, finishes, construction details, installation instructions, and recommendations for maintenance.

B. Shop Drawings: Show details of fabrication and installation, including plans, elevations, sections, details of components and attachments to other work. Distinguish between shop and field-assembled work. Include firestopping design designation of testing and inspecting agency acceptable to authorities having jurisdiction that evidences compliance with requirements for each condition indicated.

1. Submit documentation, including illustrations, from a qualified testing and inspecting agency that is applicable to each firestopping system configuration for construction and penetrating items.
2. Where Project conditions require modification of qualified testing and inspecting agency's tested system to suit a particular firestopping condition, an engineering judgment derived from similar qualified tested system designs or other tests will be submitted to local authorities having jurisdiction for their review and approval prior to installation. Engineering judgment documents must follow requirements set forth by the International Firestop Council.

1.3 INFORMATIONAL SUBMITTALS

A. Manufacturer's Project Acceptance Document: Certification by the manufacturer that its product(s) are approved, acceptable, suitable for use in specific locations, for specific details, and for applications indicated, specified, or required, and that a warranty will be issued.

B. Product Test Reports: Written reports based on evaluation of comprehensive tests performed by qualified testing agency indicating that each product complies with requirements.

C. Field Quality Control Reports: Written report of testing and inspection required by "Field Quality Control".

D. Qualification Data:

1. For firms and persons specified in "Quality Assurance" to demonstrate their capabilities and experience. Include list of completed projects.

1.4 QUALITY ASSURANCE

A. Installer Qualifications: An experienced installer who has completed firestopping systems similar in material, design, and extent to that indicated for this Project and whose work has resulted in construction with a record of successful in-service performance.

B. Installer Qualifications: A firm that has been approved by FM Global according to FM Global 4991, "Approval of Firestop Contractors," or been evaluated by UL and found to comply with its "Qualified Firestop Contractor Program Requirements."

C. Source Limitations: Obtain penetration firestopping systems, for each kind of penetration and construction condition required, from a single manufacturer.

D. Fire-Test-Response Characteristics: Provide firestopping systems that comply with the following requirements and those specified in "Performance Requirements" Article:

1. Firestopping tests are performed by a qualified testing and inspecting agency performing testing and follow-up inspection services for firestopping systems acceptable to authorities having jurisdiction.
2. Penetration firestopping systems: Provide materials that are identical to those tested per ASTM E 814 or UL 1479. Provide rated firestopping system products that bear classification marking of qualified testing and inspecting agency.
3. FM Global: Provide classification markings on penetration firestopping corresponding to designations listed by the following:

    a. FM Global in its "Building Materials Approval Guide."

1.5 PRE-INSTALLATION CONFERENCE

A. Pre-Installation Conference: Before Work begins, conduct conference at Project site.

1.6 PROJECT CONDITIONS

A. Field Measurements: Where products and systems are indicated to fit walls and other construction, verify dimensions by field measurements before fabrication.

B. Environmental Limitations: Do not install firestopping systems when ambient or substrate temperatures are outside limits permitted by firestopping system manufacturers or when substrates are wet due to rain, frost, condensation, or other causes.

C. Ventilate firestopping systems per manufacturer's written instructions by natural means or, where this is inadequate, forced-air circulation.

1.7 COORDINATION

A. Coordinate installation of products and systems with interfacing and adjoining construction to provide a successful installation without failure.

B. Coordinate sizing of sleeves, openings, core-drilled holes, or cut openings to accommodate firestopping systems.

C. Notify Owner's inspecting agency at least seven days in advance of firestopping system installations; confirm dates and times on days preceding each series of installations.

D. Do not cover up firestopping system installations that will become concealed behind other construction until Owner's inspecting agency and building inspector, if required by authorities having jurisdiction, have examined each installation.

PART 2 - PRODUCTS

2.1 FIRESTOPPING, GENERAL

A. Acceptable Manufacturers: Manufacturer is "acceptable" if firestopping system has been tested and listed by UL or other testing and inspection agency acceptable to authorities having jurisdiction and manufacturer can evidence product compliance with requirements of the Contract Documents.

1. FM Global: Manufacturer to provide firestopping products in compliance with FM Global requirements as indicated in "Quality Assurance" Article.

B. Compatibility: Provide firestopping systems that are compatible with one another, with the substrates forming openings, and with the items, if any, penetrating firestopping systems, under conditions of service and application, as demonstrated by firestopping system manufacturer based on testing and field experience.

C. Single Source Responsibility: Furnish each type of product from single manufacturer. Provide secondary materials only as recommended by manufacturer of primary materials and approved by the qualified testing and inspection agency for firestopping systems indicated.

2.2 PERFORMANCE REQUIREMENTS

A. General: Provide firestopping systems that are produced and installed to resist spread of fire according to requirements indicated, resist passage of smoke and other gases, and maintain original fire-resistance rating of assembly penetrated.

B. F-Rated Systems: Provide penetration firestopping systems with F-ratings determined per ASTM E 814 or UL 1479, equaling or exceeding fire-resistance rating of constructions penetrated.

C. T-Rated Systems: For the following conditions, provide penetration firestopping systems with T-ratings, as well as F-ratings, determined per ASTM E 814 or UL 1479, where systems protect penetrating items exposed to potential contact with adjacent materials in occupiable floor areas:

1. Penetrations located outside wall cavities.
2. Penetrations located outside fire-resistive shaft enclosures.
3. Penetrations located in construction containing fire-protection-rated openings.

D. For penetration firestopping systems exposed to view, provide products with flame-spread ratings of less than 25 and smoke-developed ratings of less than 450, as determined per ASTM E 84.

2.3 PENETRATION FIRESTOP SYSTEMS

A. Description: Classified in Underwriters Laboratories (UL) Fire Resistance Directory, "Section XHEZ - Penetration Firestop Systems", and/or "Section XHHW - Fill Void or Cavity Materials" for specific project conditions.

B. Application Considerations:

1. Firestops exposed to view and/or are scheduled to receive finishes shall be paintable or capable of receiving finish materials.
2. Firestops exposed to traffic, moisture, and physical damage shall be products that do not deteriorate when exposed to these conditions.
3. Firestops for water piping penetrations, of any type, shall be moisture-resistant products.
4. Firestops for floor penetrations with annular spaces exceeding 4 in (100 mm) or more in width and exposed to possible loading and traffic shall be products capable of supporting the floor loads involved either by installing floor plates or by other means.
5. Firestops for penetrations involving insulated piping shall be products that do not require removal of insulation.
6. Firestops for cable trays and future penetrations shall be reusable pillows or bags.

C. Provide firestops within fire resistive walls and partitions containing flush mounted devices such as outlet boxes, electrical cabinets and mechanical cabinets mounted back to back and spaced less than 24 inches on center in accordance with UL Fire Resistance Directory "Wall Opening Protective Materials", Category CLIV.

D. For those products requiring mixing before application, comply with penetration firestopping system manufacturer's written instructions for accurate proportioning of materials, water (if required), type of mixing equipment, selection of mixer speeds, mixing containers, mixing time, and other items or procedures needed to produce products of uniform quality with optimum performance characteristics for application indicated.

PART 3 - EXECUTION

3.1 EXAMINATION

A. Acceptance of Surfaces and Conditions: Examine substrates to receive products and systems and associated work for compliance with requirements and other conditions affecting performance. Proceed only when unsatisfactory conditions have been corrected in a manner complying with Contract Documents. Starting work within a particular area will be construed as acceptance of surface conditions.

3.2 PREPARATION

A. General: Comply with manufacturer's instructions, recommendations, and specifications for cleaning and surface preparation. Surfaces shall have no defects, contaminants, or errors which would result in poor or potentially defective installation or would cause latent defects in Work.

1. Remove foreign materials from surfaces of openings, joints and penetrating items that could interfere with adhesion of firestopping.
2. Clean opening and joint substrates and penetrating items to produce clean, sound surfaces capable of developing optimum bond with firestopping. Remove loose particles remaining from cleaning operation.
3. Remove laitance and form release agents from concrete.

B. Priming: Prime substrates where recommended by firestopping manufacturer using that manufacturer's recommended products and methods. Confine primers to areas of bond; do not allow spillage and migration onto exposed surfaces.

C. Masking Tape: Use masking tape to prevent firestopping from contacting adjoining surfaces that will remain exposed upon completion of Work and that would otherwise be permanently stained or damaged by such contact or by cleaning methods used to remove smears from firestopping materials. Remove tape as soon as it is possible to do so without disturbing firestopping's seal with substrates.

3.3 INSTALLATION, GENERAL

A. Installation Quality Standards: In addition to standards listed elsewhere, perform Work according to following, unless otherwise specified:

1. Respective manufacturer written installation instructions.
2. Accepted submittals.
3. Contract Documents.

B. Control of Corrosion: Prevent galvanic action and other forms of corrosion by isolating metals and other materials from direct contact with incompatible materials.

3.4 INSTALLATION OF PENETRATION FIRESTOPS

A. Install forming/damming materials and other accessories of types required to support fill materials during their application and in the position needed to produce the cross-sectional shapes and depths required to achieve fire ratings of designated penetration firestop systems. After installing fill materials, remove combustible forming materials and other accessories not indicated as permanent components of firestop systems.

B. Install fill materials for penetration firestop systems by proven techniques to produce the following results:

1. Completely fill voids and cavities formed by openings, forming materials, accessories, and penetrating items.
2. Apply materials so they contact and adhere to substrates formed by openings and penetrating items.
3. For fill materials that will remain exposed after completing Work, finish to produce smooth, uniform surfaces that are flush with adjoining finishes.

3.5 IDENTIFICATION

A. Identify penetration firestopping with preprinted metal or plastic labels. Attach labels permanently to surfaces adjacent to and within 6 in (150 mm) of firestopping edge so labels will be visible to anyone seeking to remove penetrating items or firestopping. Use mechanical fasteners or self-adhering-type labels with adhesives capable of permanently bonding labels to surfaces on which labels are placed. Include the following information on labels:

1. The words "Warning - Penetration Firestopping - Do Not Disturb. Notify Building Management of Any Damage."
2. Contractor's name, address, and phone number.
3. Tested System or Engineered Judgement Number.
4. Date of installation.
5. Manufacturer's name.
6. **Installer's name.**

3.6 FIELD QUALITY CONTROL

A. Where required, inspection of through-penetration firestopping shall be performed in accordance with ASTM E 2174 "Standard Practice for On-Site Inspection of Installed Fire Stops" or other recognized standard.

B. Testing Agency: The Owner may employ and pay a qualified independent testing agency to perform field quality control. Materials and installation failing to meet specified requirements shall be replaced at Contractor's expense. Retesting of materials and installations failing to meet specified requirements shall be done at Contractor's expense.

1. Inspections shall include the following verifications:

   a. Verify that proper specified firestopping system products and materials are used.
   b. Verify installer's credentials and certification.
   c. Verify that each firestopping system is installed in accordance with product manufacturer's latest published requirements.
   d. Verify that firestopping system materials and installation comply with appropriate rating authorities' requirements.
   e. Verify that firestopping system is installed in specified and/or indicated locations in rated assemblies.

2. Do not proceed to enclose firestopping system installations with other construction until reports of examinations are issued.
3. Where deficiencies are found, repair or replace firestopping system materials and products to bring deficient installation into compliance with specified requirements.

3.7 CLEANING

A. Clean off excess fill materials and sealants adjacent to openings and joints as work progresses by methods and with cleaning materials approved by manufacturers of firestopping system products and of products in which opening and joints occur.

B. Protect firestopping system components during and after curing period from contact with contaminating substances or from damage resulting from construction operations or other causes so that they are without deterioration or damage at time of Substantial Completion. If, despite such protection, damage or deterioration occurs, cut out and remove damaged or deteriorated firestopping immediately and install new materials to produce firestopping complying with specified requirements.

END OF SECTION

SECTION 07 8446

FIRE RESISTIVE JOINT FIRESTOPPING

PART 1 - GENERAL

1.1 SUMMARY

A. This Section includes firestopping systems for joints at perimeter and through smoke and fire-resistance-rated assemblies, and supplementary items necessary to complete their installation.

1.2 ACTION SUBMITTALS

A. Product Data: Manufacturer's technical literature for each product and system indicated.

1. Include manufacturer's specifications for materials, finishes, construction details, installation instructions, and recommendations for maintenance.

B. Shop Drawings: Show details of fabrication and installation, including plans, elevations, sections, details of components and attachments to other work. Include firestopping design designation of testing and inspecting agency acceptable to authorities having jurisdiction that evidences compliance with requirements for each condition indicated. Distinguish between shop and field-assembled work.

1. Submit documentation, including illustrations, from a qualified testing and inspecting agency that is applicable to each firestopping system configuration for each type construction.
2. Where Project conditions require modification of qualified testing and inspecting agency's tested system to suit a particular firestopping condition, an engineering judgment derived from similar qualified tested system designs or other tests will be submitted to local authorities having jurisdiction for their review and approval prior to installation. Engineering judgment documents must follow requirements set forth by the International Firestop Council.

1.3 INFORMATIONAL SUBMITTALS

A. Manufacturer's Project Acceptance Document: Certification by the manufacturer that its product(s) are approved, acceptable, suitable for use in specific locations, for specific details, and for applications indicated, specified, or required, and that a warranty will be issued.

B. Product Test Reports: Written reports based on evaluation of comprehensive tests performed by qualified testing agency indicating that each product complies with requirements.

C. Field Quality Control Reports: Written report of testing and inspection required by "Field Quality Control".

D. Qualification Data:

1. For firms and persons specified in "Quality Assurance" to demonstrate their capabilities and experience. Include list of completed projects

1.4 QUALITY ASSURANCE

A. Installer Qualifications: An experienced installer who has completed firestopping systems similar in material, design, and extent to that indicated for this Project and whose work has resulted in construction with a record of successful in-service performance.

B. Firestop System installation shall meet requirements of ASTM E 1966 and/or ANSI/UL 2079 tested and listed assemblies that provide fire-resistance ratings not less than that of the construction in which the joint occurs.

C. Source Limitations: Obtain firestopping systems, for each kind of construction condition required, from a single manufacturer.

D. Compatibility and Adhesion Testing: Manufacturer of fire stopping material shall be responsible for testing samples of materials that will contact or affect firestopping materials.

1. Use manufacturer's standard test methods to determine whether priming and other specific joint preparation techniques are required to obtain rapid, optimum adhesion of fill materials to joint substrates.
2. Perform tests under environmental conditions replicating those that will exist during installation.
3. Schedule sufficient time for testing and analyzing results to prevent delaying the Work.
4. For materials failing tests, obtain fire-resistant joint sealants manufacturer's written instructions for corrective measures, including the use of specially formulated primers.

E. Fire-Test-Response Characteristics: Provide firestopping systems that comply with the following requirements and those specified in "Performance Requirements" Article:

1. Firestopping tests are performed by a qualified testing and inspecting agency performing testing and follow-up inspection services for firestopping systems acceptable to authorities having jurisdiction.
2. Fire Resistive Joint System: Provide materials that are identical to those tested according to UL 2079 or ASTM E 1966. Products shall have a flame spread rating of less than 25.

    a. Where UL-classified fire-resistant joint sealants are indicated, they refer to alphanumeric designations listed in UL's "Fire Resistance Directory" under product Category XHBN.

    b. Safing Material: Provide materials that are identical to those tested according to ASTM E 84. Products shall have the following ratings:

        1) Flame Spread: Less than 15.
        2) Smoke Developed: 0.

    c. System: Provide materials that are identical to those tested according to a modified ASTM E 119 test, where the furnace is modified to simulate a floor as it intersects with the wall. System shall have the following rating:

        1) Integrity Rating: 2 hours.
        2) F-Rating: Equal to or exceeding the fire-resistance rating of the floor assembly.

d. Where UL-classified perimeter fire-containment systems are indicated, they refer to alphanumeric designations listed in UL's "Fire Resistance Directory" under product Category XHBN or XHDG.

1.5 PRE-INSTALLATION CONFERENCE

A. Pre-Installation Conference: Before Work begins, conduct conference at Project site.

1.6 PROJECT CONDITIONS

A. Field Measurements: Where products and systems are indicated to fit walls and other construction, verify dimensions by field measurements before fabrication.

B. Environmental Limitations: Do not install firestopping systems when ambient or substrate temperatures are outside limits permitted by firestopping system manufacturers or when substrates are wet due to rain, frost, condensation, or other causes.

C. Ventilate firestopping systems per manufacturer's written instructions by natural means or, where this is inadequate, forced-air circulation.

1.7 COORDINATION

A. Coordinate installation of products and systems with interfacing and adjoining construction to provide a successful installation without failure.

B. Notify Owner's inspecting agency at least seven days in advance of firestopping system installations; confirm dates and times on days preceding each series of installations.

C. Do not cover up firestopping system installations that will become concealed behind other construction until Owner's inspecting agency and building inspector, if required by authorities having jurisdiction, have examined each installation.

PART 2 - PRODUCTS

2.1 FIRESTOPPING, GENERAL

A. Acceptable Manufacturers: Manufacturer is "acceptable" if firestopping system has been tested and listed by UL or other testing and inspection agency acceptable to authorities having jurisdiction and manufacturer can evidence product compliance with requirements of the Contract Documents.

1. FM Global: Manufacturer to provide firestopping products in compliance with FM Global requirements as indicated in "Quality Assurance" Article.

B. Compatibility: Provide firestopping systems that are compatible with one another and the substrates forming openings, under conditions of service and application, as demonstrated by firestopping system manufacturer based on testing and field experience.

C. Single Source Responsibility: Furnish each type of product from single manufacturer. Provide secondary materials only as recommended by manufacturer of primary materials. Use only components specified by firestopping system manufacturer and approved by the qualified testing and inspecting agency for firestopping systems indicated.

2.2 PERFORMANCE REQUIREMENTS

A. General: Provide firestopping systems that are produced and installed to resist spread of fire according to requirements indicated, resist passage of smoke and other gases, and maintain original fire-resistance rating of assembly in which firestopping systems are installed. Joint firestopping systems shall accommodate building movements without impairing their ability to resist the passage of fire and hot gasses.

B. Fire-Resistant Joint Sealants: Provide systems for sealing linear joints in fire resistive rated assemblies that have ratings with movement capabilities equaling or exceeding the fire resistance rating of construction which joint occurs, as determined by UL 2079 or ASTM E 1966.

C. Joints in or between Fire-Resistance-Rated Construction: Provide joint firestopping systems with ratings determined per ASTM E 1966 or UL 2079.

1. Fire-Resistance Rating: Equal to or exceeding the fire-resistance rating of the wall, floor, or roof in or between which it is installed.

D. Joints in Smoke Barriers: Provide fire-resistive joint systems with ratings determined per UL 2079 based on testing at a positive pressure differential of 0.30-inch wg (74.7 Pa).

1. L-Rating: Not exceeding 5.0 cfm/ft. (0.00775 cu. m/s x m) of joint at both ambient and elevated temperatures.

E. Exposed Joint Firestopping Systems: Flame-spread and smoke-developed indexes of less than 25 and 450, respectively, as determined per ASTM E 84.

F. Joints, required for control of movement, at intersection between Rated Wall Assemblies and Nonrated Horizontal Assemblies: Provide joint firestopping with ratings determined by ASTM E 2837.

2.3 TOP-OF-WALL JOINT FIRESTOPPING

A. Safing Insulation: Semi rigid board insulation produced by combining slag-wool fibers with thermosetting resin binders and complying with the following:

1. ASTM C 612, Type 1A and 1B.
2. Nominal density of 4 lb/cu. ft.
3. ASTM E119 Fire rating indicated, but not less than 2 hours.

B. Coating Material: Manufacturers standard fill material or spray applied product for sealing surface of safing insulation and adjacent construction against penetration of fire and smoke.

C. Fire Resistive Sealants: Intumescent single-component, water based, high solids, elastomeric sealants. Nonsag formulation for openings in vertical and other surfaces requiring a nonslumping, gunnable sealant.

2.4 EDGE -OF-SLAB FIRESTOPPING

A. Safing Insulation: Semi rigid board insulation produced by combining slag-wool fibers with thermosetting resin binders and complying with the following:

1. ASTM C 612, Type 1A and 1B.
2. Nominal density of 4 lb/cu. ft.
3. ASTM E119 Fire rating indicated, but not less than 2 hours.

B. Coating Material: Manufacturers standard fill material or spray applied product for sealing surface of safing insulation and adjacent construction against penetration of fire and smoke.

PART 3 - EXECUTION

3.1 EXAMINATION

A. Acceptance of Surfaces and Conditions: Examine substrates to receive products and systems and associated work for compliance with requirements and other conditions affecting performance. Proceed only when unsatisfactory conditions have been corrected in a manner complying with Contract Documents. Starting work within a particular area will be construed as acceptance of surface conditions

3.2 PREPARATION

A. General: Comply with manufacturer's instructions, recommendations, and specifications for cleaning and surface preparation. Surfaces shall have no defects, contaminants, or errors which would result in poor or potentially defective installation or would cause latent defects in Work.

1. Remove foreign materials from surfaces of joints that could interfere with adhesion of firestopping.
2. Clean joint substrates to produce clean, sound surfaces capable of developing optimum bond with firestopping. Remove loose particles remaining from cleaning operation.
3. Remove laitance and form release agents from concrete.

B. Priming: Prime substrates where recommended by firestopping manufacturer using that manufacturer's recommended products and methods. Confine primers to areas of bond; do not allow spillage and migration onto exposed surfaces.

C. Masking Tape: Use masking tape to prevent firestopping from contacting adjoining surfaces that will remain exposed upon completion of Work and that would otherwise be permanently stained or damaged by such contact or by cleaning methods used to remove smears from firestopping materials. Remove tape as soon as it is possible to do so without disturbing firestopping's seal with substrates.

3.3 INSTALLATION - GENERAL

A. Installation Quality Standards: In addition to standards listed elsewhere, perform Work according to following, unless otherwise specified:

1. Respective manufacturer written installation instructions.
2. Accepted submittals.
3. Contract Documents.

B. Control of Corrosion: Prevent galvanic action and other forms of corrosion by isolating metals and other materials from direct contact with incompatible materials.

C. Install forming/packing/backing materials and other accessories of types required to support fill materials during their application and in position needed to produce cross-sectional shapes and depths required to achieve fire ratings indicated.

D. Install fill materials for fire-resistant joint sealants by proven techniques to produce the following results:

1. Fill voids and cavities formed by openings and forming/packing/backing materials as required to achieve fire-resistance ratings indicated.
2. Apply fill materials so they contact and adhere to substrates formed by joints.
3. For fill materials that will remain exposed after completing Work, finish to produce smooth, uniform surfaces that are flush with adjoining finishes.

3.4 INSTALLATION OF FIRE-RESISTANT JOINT SEALANTS

A. Comply with ASTM C 1193, and with the sealant manufacturer's installation instructions and drawings pertaining to products and applications indicated.

B. Install joint fillers to provide support of sealants during application and at position required to produce the cross-sectional shapes and depths of installed sealants relative to joint widths that allow optimum sealant movement capability and develop fire-resistance rating required.

C. Install sealants by proven techniques that result in sealants directly contacting and fully wetting joint substrates, completely filling recesses provided for each joint configuration, and providing uniform, cross-sectional shapes and depths relative to joint width that optimum sealant movement capability. Install sealants at the same time joint fillers are installed.

D. Tool nonsag sealants immediately after sealant application and prior to the time skinning or curing begin. Form smooth, uniform beads of configuration indicated or required to produce fire-resistance rating, as well as to eliminate air pockets, and to ensure contact and adhesion of sealants with sides of joint. Remove excess sealant from surfaces adjacent to joint. Do not use tooling agents that discolor sealants or adjacent surfaces or are not approved by sealant manufacturer.

3.5 INSTALLATION OF FIRE SAFING PROTECTION

A. Top of Wall: Install safing insulation to fill gap between top of wall and floor slab above. Cut safing insulation 50 percent wider than gap to be filled to ensure compression fit.

B. Edge of Slab: Install safing insulation to fill gap between edge of structural floor/roof slab and back of exterior wall on safing clips spaced as needed to support insulation but not further apart then 24 in (600 mm) o.c. unless not required by tested system. Cut safing insulation 50 percent wider than gap to be filled to ensure compression fit or install vertically as required by tested assembly.

C. Install coating material or smoke seal compound to cover fill material and seal opening.

3.6 IDENTIFICATION

A. Identify fire-resistive joint systems with preprinted metal or plastic labels. Attach labels permanently to surfaces adjacent to and within 6 in (150 mm) of joint edge so labels will be visible to anyone seeking to remove or penetrate joint system. Use mechanical fasteners or self-adhering-type labels with adhesives capable of permanently bonding labels to surfaces on which labels are placed. Include the following information on labels:

1. The words "Warning - Fire-Resistive Joint System - Do Not Disturb. Notify Building Management of Any Damage."
2. Contractor's name, address, and phone number.
3. Tested System or Engineered Judgment Number.
4. Date of installation.
5. Manufacturer's name.
6. Installer's name.

3.7 FIELD QUALITY CONTROL

A. Where required, inspection of fire resistive joint firestopping shall be performed in accordance with ASTM E 2393, "Standard Practice for On-Site Inspection of Installed Fire Resistive Joint Systems and Perimeter Fire Barriers" or other recognized standard.

B. Testing Agency: The Owner may employ and pay a qualified independent testing agency to perform field quality control. Materials and installation failing to meet specified requirements shall be replaced at Contractor's expense. Retesting of materials and installations failing to meet specified requirements shall be done at Contractor's expense.

1. Inspections shall include the following verifications:

   a. Verify that proper specified firestopping system products and materials are used.
   b. Verify installer's credentials and certification.
   c. Verify that each firestopping system is installed in accordance with product manufacturer's latest published requirements.
   d. Verify that firestopping system materials and installation comply with appropriate rating authorities' requirements.
   e. Verify that firestopping system is installed in specified and/or indicated locations in rated assemblies.

2. Do not proceed to enclose firestopping system installations with other construction until reports of examinations are issued.
3. Where deficiencies are found, repair or replace firestopping system materials and products to bring deficient installation into compliance with specified requirements.

3.8 CLEANING

A. Clean off excess fill materials and sealants adjacent to openings and joints as work progresses by methods and with cleaning materials approved by manufacturers of firestopping system products and of products in which joints occur.

B. Protect firestopping system components during and after curing period from contact with contaminating substances or from damage resulting from construction operations or other causes so that they are without deterioration or damage at time of Substantial Completion. If, despite such protection, damage or deterioration occurs, cut out and remove damaged or deteriorated firestopping immediately and install new materials to produce firestopping complying with specified requirements.

END OF SECTION

SECTION 07 8446

FIRE RESISTIVE JOINT FIRESTOPPING

PART 1 - GENERAL

1.1 SUMMARY

A. This Section includes firestopping systems for joints at perimeter and through smoke and fire-resistance-rated assemblies, and supplementary items necessary to complete their installation.

1.2 ACTION SUBMITTALS

A. Product Data: Manufacturer's technical literature for each product and system indicated.

1. Include manufacturer's specifications for materials, finishes, construction details, installation instructions, and recommendations for maintenance.

B. Shop Drawings: Show details of fabrication and installation, including plans, elevations, sections, details of components and attachments to other work. Include firestopping design designation of testing and inspecting agency acceptable to authorities having jurisdiction that evidences compliance with requirements for each condition indicated. Distinguish between shop and field-assembled work.

1. Submit documentation, including illustrations, from a qualified testing and inspecting agency that is applicable to each firestopping system configuration for each type construction.
2. Where Project conditions require modification of qualified testing and inspecting agency's tested system to suit a particular firestopping condition, an engineering judgment derived from similar qualified tested system designs or other tests will be submitted to local authorities having jurisdiction for their review and approval prior to installation. Engineering judgment documents must follow requirements set forth by the International Firestop Council.

1.3 INFORMATIONAL SUBMITTALS

A. Manufacturer's Project Acceptance Document: Certification by the manufacturer that its product(s) are approved, acceptable, suitable for use in specific locations, for specific details, and for applications indicated, specified, or required, and that a warranty will be issued.

B. Product Test Reports: Written reports based on evaluation of comprehensive tests performed by qualified testing agency indicating that each product complies with requirements.

C. Field Quality Control Reports: Written report of testing and inspection required by "Field Quality Control".

D. Qualification Data:

1. For firms and persons specified in "Quality Assurance" to demonstrate their capabilities and experience. Include list of completed projects

1.4 QUALITY ASSURANCE

A. Installer Qualifications: An experienced installer who has completed firestopping systems similar in material, design, and extent to that indicated for this Project and whose work has resulted in construction with a record of successful in-service performance.

B. Firestop System installation shall meet requirements of ASTM E 1966 and/or ANSI/UL 2079 tested and listed assemblies that provide fire-resistance ratings not less than that of the construction in which the joint occurs.

C. Source Limitations: Obtain firestopping systems, for each kind of construction condition required, from a single manufacturer.

D. Compatibility and Adhesion Testing: Manufacturer of fire stopping material shall be responsible for testing samples of materials that will contact or affect firestopping materials.

1. Use manufacturer's standard test methods to determine whether priming and other specific joint preparation techniques are required to obtain rapid, optimum adhesion of fill materials to joint substrates.
2. Perform tests under environmental conditions replicating those that will exist during installation.
3. Schedule sufficient time for testing and analyzing results to prevent delaying the Work.
4. For materials failing tests, obtain fire-resistant joint sealants manufacturer's written instructions for corrective measures, including the use of specially formulated primers.

E. Fire-Test-Response Characteristics: Provide firestopping systems that comply with the following requirements and those specified in "Performance Requirements" Article:

1. Firestopping tests are performed by a qualified testing and inspecting agency performing testing and follow-up inspection services for firestopping systems acceptable to authorities having jurisdiction.
2. Fire Resistive Joint System: Provide materials that are identical to those tested according to UL 2079 or ASTM E 1966. Products shall have a flame spread rating of less than 25.

    a. Where UL-classified fire-resistant joint sealants are indicated, they refer to alphanumeric designations listed in UL's "Fire Resistance Directory" under product Category XHBN.

    b. Safing Material: Provide materials that are identical to those tested according to ASTM E 84. Products shall have the following ratings:

        1) Flame Spread: Less than 15.
        2) Smoke Developed: 0.

    c. System: Provide materials that are identical to those tested according to a modified ASTM E 119 test, where the furnace is modified to simulate a floor as it intersects with the wall. System shall have the following rating:

        1) Integrity Rating: 2 hours.
        2) F-Rating: Equal to or exceeding the fire-resistance rating of the floor assembly.

d. Where UL-classified perimeter fire-containment systems are indicated, they refer to alphanumeric designations listed in UL's "Fire Resistance Directory" under product Category XHBN or XHDG.

1.5 PRE-INSTALLATION CONFERENCE

A. Pre-Installation Conference: Before Work begins, conduct conference at Project site.

1.6 PROJECT CONDITIONS

A. Field Measurements: Where products and systems are indicated to fit walls and other construction, verify dimensions by field measurements before fabrication.

B. Environmental Limitations: Do not install firestopping systems when ambient or substrate temperatures are outside limits permitted by firestopping system manufacturers or when substrates are wet due to rain, frost, condensation, or other causes.

C. Ventilate firestopping systems per manufacturer's written instructions by natural means or, where this is inadequate, forced-air circulation.

1.7 COORDINATION

A. Coordinate installation of products and systems with interfacing and adjoining construction to provide a successful installation without failure.

B. Notify Owner's inspecting agency at least seven days in advance of firestopping system installations; confirm dates and times on days preceding each series of installations.

C. Do not cover up firestopping system installations that will become concealed behind other construction until Owner's inspecting agency and building inspector, if required by authorities having jurisdiction, have examined each installation.

PART 2 - PRODUCTS

2.1 FIRESTOPPING, GENERAL

A. Acceptable Manufacturers: Manufacturer is "acceptable" if firestopping system has been tested and listed by UL or other testing and inspection agency acceptable to authorities having jurisdiction and manufacturer can evidence product compliance with requirements of the Contract Documents.

1. FM Global: Manufacturer to provide firestopping products in compliance with FM Global requirements as indicated in "Quality Assurance" Article.

B. Compatibility: Provide firestopping systems that are compatible with one another and the substrates forming openings, under conditions of service and application, as demonstrated by firestopping system manufacturer based on testing and field experience.

C. Single Source Responsibility: Furnish each type of product from single manufacturer. Provide secondary materials only as recommended by manufacturer of primary materials. Use only components specified by firestopping system manufacturer and approved by the qualified testing and inspecting agency for firestopping systems indicated.

2.2 PERFORMANCE REQUIREMENTS

A. General: Provide firestopping systems that are produced and installed to resist spread of fire according to requirements indicated, resist passage of smoke and other gases, and maintain original fire-resistance rating of assembly in which firestopping systems are installed. Joint firestopping systems shall accommodate building movements without impairing their ability to resist the passage of fire and hot gasses.

B. Fire-Resistant Joint Sealants: Provide systems for sealing linear joints in fire resistive rated assemblies that have ratings with movement capabilities equaling or exceeding the fire resistance rating of construction which joint occurs, as determined by UL 2079 or ASTM E 1966.

C. Joints in or between Fire-Resistance-Rated Construction: Provide joint firestopping systems with ratings determined per ASTM E 1966 or UL 2079.

1. Fire-Resistance Rating: Equal to or exceeding the fire-resistance rating of the wall, floor, or roof in or between which it is installed.

D. Joints in Smoke Barriers: Provide fire-resistive joint systems with ratings determined per UL 2079 based on testing at a positive pressure differential of 0.30-inch wg (74.7 Pa).

1. L-Rating: Not exceeding 5.0 cfm/ft. (0.00775 cu. m/s x m) of joint at both ambient and elevated temperatures.

E. Exposed Joint Firestopping Systems: Flame-spread and smoke-developed indexes of less than 25 and 450, respectively, as determined per ASTM E 84.

F. Joints, required for control of movement, at intersection between Rated Wall Assemblies and Nonrated Horizontal Assemblies: Provide joint firestopping with ratings determined by ASTM E 2837.

2.3 TOP-OF-WALL JOINT FIRESTOPPING

A. Safing Insulation: Semi rigid board insulation produced by combining slag-wool fibers with thermosetting resin binders and complying with the following:

1. ASTM C 612, Type 1A and 1B.
2. Nominal density of 4 lb/cu. ft.
3. ASTM E119 Fire rating indicated, but not less than 2 hours.

B. Coating Material: Manufacturers standard fill material or spray applied product for sealing surface of safing insulation and adjacent construction against penetration of fire and smoke.

C. Fire Resistive Sealants: Intumescent single-component, water based, high solids, elastomeric sealants. Nonsag formulation for openings in vertical and other surfaces requiring a nonslumping, gunnable sealant.

2.4 EDGE -OF-SLAB FIRESTOPPING

A. Safing Insulation: Semi rigid board insulation produced by combining slag-wool fibers with thermosetting resin binders and complying with the following:

1. ASTM C 612, Type 1A and 1B.
2. Nominal density of 4 lb/cu. ft.
3. ASTM E119 Fire rating indicated, but not less than 2 hours.

B. Coating Material: Manufacturers standard fill material or spray applied product for sealing surface of safing insulation and adjacent construction against penetration of fire and smoke.

PART 3 - EXECUTION

3.1 EXAMINATION

A. Acceptance of Surfaces and Conditions: Examine substrates to receive products and systems and associated work for compliance with requirements and other conditions affecting performance. Proceed only when unsatisfactory conditions have been corrected in a manner complying with Contract Documents. Starting work within a particular area will be construed as acceptance of surface conditions

3.2 PREPARATION

A. General: Comply with manufacturer's instructions, recommendations, and specifications for cleaning and surface preparation. Surfaces shall have no defects, contaminants, or errors which would result in poor or potentially defective installation or would cause latent defects in Work.

1. Remove foreign materials from surfaces of joints that could interfere with adhesion of firestopping.
2. Clean joint substrates to produce clean, sound surfaces capable of developing optimum bond with firestopping. Remove loose particles remaining from cleaning operation.
3. Remove laitance and form release agents from concrete.

B. Priming: Prime substrates where recommended by firestopping manufacturer using that manufacturer's recommended products and methods. Confine primers to areas of bond; do not allow spillage and migration onto exposed surfaces.

C. Masking Tape: Use masking tape to prevent firestopping from contacting adjoining surfaces that will remain exposed upon completion of Work and that would otherwise be permanently stained or damaged by such contact or by cleaning methods used to remove smears from firestopping materials. Remove tape as soon as it is possible to do so without disturbing firestopping's seal with substrates.

3.3 INSTALLATION - GENERAL

A. Installation Quality Standards: In addition to standards listed elsewhere, perform Work according to following, unless otherwise specified:

1. Respective manufacturer written installation instructions.
2. Accepted submittals.
3. Contract Documents.

B. Control of Corrosion: Prevent galvanic action and other forms of corrosion by isolating metals and other materials from direct contact with incompatible materials.

C. Install forming/packing/backing materials and other accessories of types required to support fill materials during their application and in position needed to produce cross-sectional shapes and depths required to achieve fire ratings indicated.

D. Install fill materials for fire-resistant joint sealants by proven techniques to produce the following results:

1. Fill voids and cavities formed by openings and forming/packing/backing materials as required to achieve fire-resistance ratings indicated.
2. Apply fill materials so they contact and adhere to substrates formed by joints.
3. For fill materials that will remain exposed after completing Work, finish to produce smooth, uniform surfaces that are flush with adjoining finishes.

3.4 INSTALLATION OF FIRE-RESISTANT JOINT SEALANTS

A. Comply with ASTM C 1193, and with the sealant manufacturer's installation instructions and drawings pertaining to products and applications indicated.

B. Install joint fillers to provide support of sealants during application and at position required to produce the cross-sectional shapes and depths of installed sealants relative to joint widths that allow optimum sealant movement capability and develop fire-resistance rating required.

C. Install sealants by proven techniques that result in sealants directly contacting and fully wetting joint substrates, completely filling recesses provided for each joint configuration, and providing uniform, cross-sectional shapes and depths relative to joint width that optimum sealant movement capability. Install sealants at the same time joint fillers are installed.

D. Tool nonsag sealants immediately after sealant application and prior to the time skinning or curing begin. Form smooth, uniform beads of configuration indicated or required to produce fire-resistance rating, as well as to eliminate air pockets, and to ensure contact and adhesion of sealants with sides of joint. Remove excess sealant from surfaces adjacent to joint. Do not use tooling agents that discolor sealants or adjacent surfaces or are not approved by sealant manufacturer.

3.5 INSTALLATION OF FIRE SAFING PROTECTION

A. Top of Wall: Install safing insulation to fill gap between top of wall and floor slab above. Cut safing insulation 50 percent wider than gap to be filled to ensure compression fit.

B. Edge of Slab: Install safing insulation to fill gap between edge of structural floor/roof slab and back of exterior wall on safing clips spaced as needed to support insulation but not further apart then 24 in (600 mm) o.c. unless not required by tested system. Cut safing insulation 50 percent wider than gap to be filled to ensure compression fit or install vertically as required by tested assembly.

C. Install coating material or smoke seal compound to cover fill material and seal opening.

3.6 IDENTIFICATION

A. Identify fire-resistive joint systems with preprinted metal or plastic labels. Attach labels permanently to surfaces adjacent to and within 6 in (150 mm) of joint edge so labels will be visible to anyone seeking to remove or penetrate joint system. Use mechanical fasteners or self-adhering-type labels with adhesives capable of permanently bonding labels to surfaces on which labels are placed. Include the following information on labels:

1. The words "Warning - Fire-Resistive Joint System - Do Not Disturb. Notify Building Management of Any Damage."
2. Contractor's name, address, and phone number.
3. Tested System or Engineered Judgment Number.
4. Date of installation.
5. Manufacturer's name.
6. Installer's name.

3.7 FIELD QUALITY CONTROL

A. Where required, inspection of fire resistive joint firestopping shall be performed in accordance with ASTM E 2393, "Standard Practice for On-Site Inspection of Installed Fire Resistive Joint Systems and Perimeter Fire Barriers" or other recognized standard.

B. Testing Agency: The Owner may employ and pay a qualified independent testing agency to perform field quality control. Materials and installation failing to meet specified requirements shall be replaced at Contractor's expense. Retesting of materials and installations failing to meet specified requirements shall be done at Contractor's expense.

1. Inspections shall include the following verifications:

   a. Verify that proper specified firestopping system products and materials are used.
   b. Verify installer's credentials and certification.
   c. Verify that each firestopping system is installed in accordance with product manufacturer's latest published requirements.
   d. Verify that firestopping system materials and installation comply with appropriate rating authorities' requirements.
   e. Verify that firestopping system is installed in specified and/or indicated locations in rated assemblies.

2. Do not proceed to enclose firestopping system installations with other construction until reports of examinations are issued.
3. Where deficiencies are found, repair or replace firestopping system materials and products to bring deficient installation into compliance with specified requirements.

3.8 CLEANING

A. Clean off excess fill materials and sealants adjacent to openings and joints as work progresses by methods and with cleaning materials approved by manufacturers of firestopping system products and of products in which joints occur.

B. Protect firestopping system components during and after curing period from contact with contaminating substances or from damage resulting from construction operations or other causes so that they are without deterioration or damage at time of Substantial Completion. If, despite such protection, damage or deterioration occurs, cut out and remove damaged or deteriorated firestopping immediately and install new materials to produce firestopping complying with specified requirements.

END OF SECTION

SECTION 07 9200

JOINT SEALANTS

PART 1 - GENERAL

1.1 SUMMARY

A. Section Includes: Joint sealants, backing materials, and supplementary items necessary for installation.

1.2 ACTION SUBMITTALS

A. Product Data: Manufacturer's technical literature for each product and system indicated.

1. Include manufacturer's specifications for materials, finishes, construction details, installation instructions, and recommendations for maintenance.

B. Samples for Initial Selection: Where specified to provide sealant colors from manufacturer's standard and custom selections, provide manufacturer's color charts consisting of strips of cured sealants showing full range of colors available for each product exposed to view.

C. Samples for Verification Purposes: Samples for each kind and color of joint sealants in 1/2 in (12 mm) wide joints formed between two 6 in (150 mm) long strips of material matching appearance of exposed surfaces adjacent to joint sealants.

1.3 INFORMATIONAL SUBMITTALS

A. Product Test Reports: Written reports based on evaluation of comprehensive tests performed by qualified testing agency indicating that each product complies with requirements.

B. Field Quality Control Reports: Written report of testing and inspection required by "Field Quality Control" Article.

C. Manufacturer's Project Acceptance Document: Certification by the manufacturer that its product(s) are approved, acceptable, suitable for use in specific locations, for specific details, and for applications indicated, specified, or required, and that a warranty will be issued.

D. Qualification Data:

1. For firms and persons specified in "Quality Assurance" to demonstrate their capabilities and experience. Include list of completed projects.

E. Warranties: Sample of warranties.

1. Provide manufacturer's and installer's written warranty covering materials and installation (labor) stating obligations, remedies, limitations, and exclusions.

1.4 QUALITY ASSURANCE

A. Installer Qualifications:

1. Experience: Installer's personnel with not less than 5 years of experience in the successful performance of Work similar to scope of this Project.
2. Supervision: Installer shall maintain a competent supervisor at Project while the Work is in progress, and who has not less than 5 years of experience installing products and systems similar to scope of this Project.
3. Manufacturer Acceptance: Installer shall be certified, approved, licensed, or acceptable to manufacturer to install products.

B. Mock-Ups: Before beginning Work of this Section, install joint sealants in mock-ups of the various assemblies specified in other Sections indicated to receive joint sealants specified in this Section. Mock-ups shall include each form of product and color required to verify selections made under sample Submittals and to demonstrate aesthetic effects and qualities of materials and execution.

C. Pre-Construction Compatibility and Adhesion Testing: Provide samples of joint substrate materials that will contact or affect urethane and silicone joint sealants to respective joint sealant manufacturers for following testing:

1. General Requirements: Test materials forming joint substrates and joint sealant backings for compatibility and adhesion with joint sealants.
2. Test Method: Manufacturer's standard test method to determine whether priming and other specific joint preparation techniques are required to obtain rapid, optimum adhesion of joint sealants to joint substrates.
3. Specimen Quantity: Provide not fewer than number of pieces required of each kind of material, including joint substrates, shims, joint sealant backings, secondary seals, and miscellaneous materials.
4. Reports: Interpret test results and certify reports indicating requirements for primers and substrate preparation needed for adhesion or for corrective measures including use of specially formulated primers.

D. -Construction Stain Testing: Submit samples of joint substrate materials that will contact or affect urethane and silicone joint sealants to respective joint sealant manufacturers for following testing:

1. General Requirements: Test materials forming joint substrates for resistance to staining caused by joint sealants.
2. Test Method: ASTM C 1248.
3. Specimen Quantity: Provide not fewer than number of pieces required by testing laboratory of each kind of material, including joint substrates, shims, joint sealant backings, secondary seals, and miscellaneous materials.
4. Reports: Interpret test results and certify reports indicating if joint sealants stain substrate materials.

1.5 PRE-INSTALLATION CONFERENCE

A. Pre-Installation Conference: Before Work begins, conduct conference at Project site.

1. Participants:

a. Architect.

b. Contractor, including superintendent.
c. Installer, including project manager and supervisor.
d. If requested, Manufacturer's qualified technical representative.
e. Installers of other construction interfaced with Work.

2. Minimum Agenda: Installer shall demonstrate understanding of the Work required by describing detailed procedures for preparing, installing, and cleaning the Work. Demonstration shall include, but not be limited to, following topics:

a. Tour representative areas of Work, inspect and discuss condition of substrate, and other preparatory work performed by other trades.
b. Review Contract Document requirements.
c. Review approved submittals.
d. Review inspection and testing requirements.
e. Review environmental conditions and procedures for coping with unfavorable conditions.
f. Resolve deviations or differences between Contract Documents and the manufacturer's specifications.

3. Record discussions, including decisions and agreements, and prepare report.

1.6 PROJECT CONDITIONS

A. Ambient Conditions: Install joint sealants within range of ambient and substrate temperatures and moisture conditions as recommended by manufacturer. Protect substrates from environmental conditions that affect performance.

1. Do not apply to a damp or wet substrate or during high humidity conditions including snow, rain, fog, or mist.

B. Weather Conditions Limitation: Proceed with Work only when existing and forecasted weather conditions will permit installation according to manufacturer's instructions and warranty requirements.

1.7 COORDINATION

A. Coordinate installation of products and systems with interfacing and adjoining construction to provide a successful installation without failure.

1.8 WARRANTY

A. Manufacturer's Warranty for Urethane Sealants: Furnish manufacturer's written material warranty for a period of 5 years from date of Substantial Completion signed by an authorized representative using manufacturer's standard form agreeing to furnish materials required to repair or replace work which exhibits material defects caused by manufacture or design of product. "Defects" is defined to include but not limited to deterioration or failure to perform as required.

B. Manufacturer's Warranty for Silicone Sealants: Furnish manufacturer's written material for a period of 20 years from date of Substantial Completion signed by an authorized representative using manufacturer's standard form agreeing to furnish materials required to repair or replace work which exhibits material defects caused by manufacture or design of product. "Defects" is defined to include but not limited to deterioration or failure to perform as required.

C. Installer's Warranty: Furnish installer's written warranty for a period of 2 years from date of Substantial Completion signed by an authorized representative using installer's standard form agreeing to provide labor required to repair or replace work which exhibits workmanship defects. "Defects" is defined to include but not limited to deterioration or failure to perform as required.

PART 2 - PRODUCTS

2.1 MANUFACTURERS AND PRODUCTS

A. Acceptable Manufacturers and Products: Subject to compliance with requirements of Contract Documents as judged by the Architect, provide product by one of manufacturers listed. If not listed, submit as substitution according to Conditions of the Contract and Division 01 Section "Substitution Procedures".

2.2 MATERIALS, GENERAL

A. Single Source Responsibility: Furnish each type of product from single manufacturer. Provide secondary materials only as recommended by manufacturer of primary materials.

B. Compatibility: Joint sealants, backings, and other related materials shall be compatible with one another and with joint substrates under conditions of service and application, as demonstrated by joint sealant manufacturer based on testing and field experience.

C. Volatile Organic Compounds (VOC) Content of Interior Sealants: Sealants and primers for use inside weatherproofing system shall comply with following limits for VOC content when calculated according to 40 CFR 59, Part 59, Subpart D (EPA Method 24):

1. Elastomeric Sealants: 250 g/L.
2. Primers for Non-Porous Substrates: 250 g/L.
3. Primers for Porous Substrates: 775 g/L.

D. Suitability for Contact with Food: Comply with authorities having jurisdiction for joints in repeated contact with food.

E. Sealant Color: As scheduled or as indicated in Design Selections.

2.3 EXTERIOR ELASTOMERIC SEALANTS

A. Exterior Pourable Urethane Sealant:

1. Product Quality Standard: ASTM C 920, Type M, Grade P, Class 25, Use T.
2. Description: Multi-component, pourable, moisture curing, polyurethane sealant; rated for incline when used on sloped surfaces.
3. Joint Movement Capability: Plus 25 percent, minus 25 percent.
4. Primers: Product provided by sealant manufacturer if required by conditions.
5. Manufacturers and Products:

    a. BASF; MasterSeal SL 2 (Formerly Sonolastic SL 2).
    b. Pecora Corp.; Urexpan NR-200.
    c. Sika Corp., Construction Products Div.; Sikaflex 2c SL.

d. Tremco Commercial Sealants & Waterproofing; THC-900/THC-901 or Vulkem 445SSL.

B. Exterior Non-sag Silicone Sealant:

1. Product Quality Standard: ASTM C 920, Type S, Grade NS, Class 50 or 100/50.
2. Description: Single component, non-sag, neutral cure, non-staining as determined by pre-construction stain testing, and non-bleeding, silicone sealant.
3. Joint Movement Capability:

a. Class 50: Plus 50 percent, minus 50 percent.
b. Class 100/50: Plus 100 percent, minus 50 percent.

4. Primers: Product provided by sealant manufacturer if required by conditions.
5. Manufacturers and Products:

a. Class 50:

1) Dow Corning; 795 Silicone Building Sealant.
2) Momentive Performance Materials, GE Silicones; Silpruf SCS2000.
3) Pecora Corp.; 864NST.
4) Sika Corp., Construction Products Div.; Sikasil WS-295.
5) Tremco Commercial Sealants & Waterproofing; Spectrem 3.

b. Class 100/50:

1) Dow Corning; 790 Silicone Building Sealant.
2) Momentive Performance Materials, GE Silicones; Silpruf LM SCS2700.
3) Pecora Corp.; 890NST.
4) Sika Corp., Construction Products Div.; Sikasil WS-290.
5) Tremco Commercial Sealants & Waterproofing; Spectrem 1.

2.4 INTERIOR ELASTOMERIC SEALANTS

A. Interior Non-sag Silicone Sealant:

1. Product Quality Standard: ASTM C 920, Type S, Grade NS, Class 25.
2. Description: Single component, non-sag, moisture curing, silicone sealant specially formulated with fungicide for use in sanitary non-porous applications.
3. Manufacturers and Products:

a. Dow Corning; 786 Silicone Sealant.
b. Momentive Performance Materials, GE Silicones; Sanitary SCS1700.
c. Pecora Corp.; 898.
d. Sika Corp., Construction Products Div.; Sikasil GP
e. Tremco Commercial Sealants & Waterproofing; Tremsil 200.

B. Interior Non-sag Urethane Sealant:

1. Product Quality Standard: ASTM C 920, Type S, Grade NS, Class 25 or 35.
2. Description: Single component, non-sag, moisture curing, non-staining as determined by pre-construction stain testing if exposed, polyurethane sealant.

3. Joint Movement Capability: Plus 25 percent, minus 25 percent, or plus 35 percent, minus 35 percent.
4. Primers: Product provided by sealant manufacturer if required by conditions.
5. Manufacturers and Products:

    a. BASF; MasterSeal NP 1 (Formerly Sonolastic NP 1).
    b. Pecora Corp.; Dynatrol I-XL.
    c. Sika Corp., Construction Products Div.; Sikaflex 1a or Sikaflex Textured Sealant.
    d. Tremco Commercial Sealants & Waterproofing; Dymonic or Vulkem 116.

C. Interior Non-sag Acrylic Latex Sealant:

1. Product Quality Standard: ASTM C 834, Type and Grade as required by conditions.
2. Description: Single component, non-sag, moisture curing, general purpose, paintable, siliconized acrylic latex sealant.
3. Joint Movement Capability: Plus 7.5 percent, minus 7.5 percent
4. Manufacturers and Products:

    a. Pecora Corp.; AC 20+.
    b. Tremco Commercial Sealants & Waterproofing; Tremflex 834.

D. Sprayed Foam Insulating Gap Filler:

1. Description: Low pressure, one-component, expanding, open-cell latex-based insulating foam gap filler; applied with professional hand-held dispensing gun; CFC and HCFC free.
2. Performance Requirements: Class 1 Fire-Retardant per ASTM E 84.
3. Manufacturers and Products:

    a. Convenience Products; Touch N' Foam, Easy Fill Latex Foam Sealant.
    b. DAP Products, Inc.; DAPtex Plus.

E. Acoustical Sealants: As specified in Division 09 Section "Gypsum Board Assemblies".

F. Fire Resistive Sealants: As specified in Division 07 Section "Fire Resistive Joint Firestopping".

2.5 HIGH TEMPERATURE SILICONE SEALANT

A. Exterior/Interior High-Temperature Silicone Sealant:

1. One-component non-slumping silicone sealant for sealing and bonding applications exposed to temperatures as high as 600 deg F (315 deg C).
2. Manufacturer and Product: Dow Corning; 736 Heat Resistant Sealant.

2.6 JOINT SEALANT BACKING

A. Sealant Backing Material, General: Nonstaining; compatible with joint substrates, sealants, primers, and other joint fillers; and approved for applications indicated by sealant manufacturer based on field experience and laboratory testing.

1. Use open cell (Type O) sealant backing rod at interior line of sealant for double sealed condition unless otherwise recommended by sealant manufacturer.

B. Cylindrical Sealant Backings:

1. Product Quality Standard: ASTM C 1330, Type C, Type O, or Type B; as approved in writing by joint-sealant manufacturer for joint application indicated.
2. Description: Extruded polyethylene, polyurethane, or polyolefin in either closed cell structure (Type C), open cell structure (Type O), or bicellular structure with surface skin (Type B) as defined by ASTM Terminology C 717.
3. Size: Diameter approximately 25 percent larger than joint width, unless otherwise directed by manufacturer.
4. Manufacturers and Products:

    a. Type C:

        1) BASF; MasterSeal 920 (Formerly Sonneborn, Closed-Cell Backer Rod).
        2) Nomaco Inc.; Green Rod or HBR.

    b. Type O:

        1) Backer Rod Mfg. Inc.; Denver Foam.
        2) Nomaco Inc.; Foam-Pak II.

    c. Type B:

        1) BASF; MasterSeal 921 (Formerly Sonneborn, Soft Backer Rod).
        2) Nomaco Inc.; Dual-Rod or Sof-Rod.

C. Bond-Breaker Tape: Polyethylene tape or other plastic tape recommended by sealant manufacturer for preventing sealant from adhering to rigid, inflexible joint-filler materials, or joint surfaces at back of joint where such adhesion would result in sealant failure. Provide self-adhesive tape where applicable.

2.7 ACCESSORIES

A. Cleaners for Non-porous Surfaces: Chemical cleaners acceptable to manufacturers of sealants and sealant backing materials, free of oily residues or other substances capable of staining or harming joint substrates and adjacent non-porous surfaces in any way, and formulated to promote optimum adhesion of sealants to joint substrates.

B. Masking Tape: Non-staining, non-absorbent material compatible with joint sealants and surfaces adjacent to joints.

PART 3 - EXECUTION

3.1 EXAMINATION

A. Acceptance of Surfaces and Conditions: Examine substrate surfaces to receive products and systems and associated Work for compliance with requirements and other conditions affecting performance. Proceed only when unsatisfactory conditions have been corrected in a manner complying with Contract Documents. Starting Work within a particular area will be construed as acceptance of surface conditions.

3.2 INSTALLATION, GENERAL

A. Installation Quality Standards: In addition to standards listed elsewhere, perform Work according to following, unless otherwise specified:

1. Respective manufacturer's written installation instructions.
2. Accepted submittals.
3. Contract Documents.

3.3 PREPARATION

A. General: Comply with manufacturer's instructions, recommendations, and specifications for cleaning and surface preparation. Surfaces shall have no defects, contaminants, or errors which would result in poor or potentially defective installation or would cause latent defects in Work.

B. Cleaning of Joints: Clean out joints immediately before installing joint backings and sealants to comply with joint sealant manufacturer's written instructions and following requirements:

1. Remove foreign material that could interfere with adhesion of joint sealant, including, but not limited to, dust, paints (except for permanent, protective coatings tested and approved for sealant adhesion and compatibility by sealant manufacturer), old joint sealants, oil, grease, waterproofing, water repellents, water, surface dirt, and frost.
2. Clean porous joint substrate surfaces by brushing, grinding, mechanical abrading, or a combination of these methods to produce a clean, sound substrate capable of developing optimum bond with joint sealants. Remove loose particles remaining after cleaning operations above by vacuuming or blowing out joints with oil-free compressed air.
3. Remove laitance and form-release agents from concrete.
4. Clean non-porous joint substrate surfaces with chemical cleaners or other means that do not stain, harm substrates, or leave residues capable of interfering with adhesion of joint sealants.
5. Substrate material allowed by sealant's ASTM C 920 Use Classification.

C. Joint Priming: Prime joint substrates where recommended by joint sealant manufacturer, or as indicated by prior experience, or as required by pre-construction compatibility and adhesion testing. Apply primer to comply with joint sealant manufacturer's written instructions. Confine primers to areas of joint sealant bond; do not allow spillage or migration onto adjoining surfaces.

D. Masking Tape: Use masking tape where required to prevent contact of sealant or primer with adjoining surfaces that otherwise would be permanently stained or damaged by such contact or by cleaning methods required to remove sealant smears. Remove tape immediately after tooling without disturbing joint seal.

3.4 INSTALLATION

A. Joint Sealant Backings: Install type indicated to support sealants during application and at position required to produce cross-sectional shapes and depths of installed sealants relative to joint widths that allow optimum sealant movement capability.

1. Do not leave gaps between ends of sealant backings.
2. Do not stretch, twist, puncture, or tear backings.

3. Remove absorbent sealant backings that have become wet or damaged before sealant application and replace with dry materials.
4. Install bond-breaker tape behind sealants where backings are not used between sealants and backs of joints.

B. Joint Sealants: Install at same time as backings using proven techniques that comply with following:

1. Place sealants so they directly contact and fully wet joint substrates.
2. Completely fill recesses in each joint configuration.
3. Produce uniform, cross sectional shapes and depths relative to joint widths that allow optimum sealant movement capability.
4. Immediately after sealant application and before skinning or curing begins, tool sealants according to requirements specified in subparagraphs below to form smooth, uniform beads of configuration indicated; to eliminate air pockets; and to ensure contact and adhesion of sealant with sides of joint.

    a. Remove excess sealant from surfaces adjacent to joints.
    b. Use tooling agents that are approved in writing by sealant manufacturer and that do not discolor sealants or adjacent surfaces.
    c. Use masking tape to protect surfaces adjacent to recessed tooled joints.

5. Install joint sealants in accordance with ASTM C 1193 as applicable to materials, applications, conditions indicated, and with the following profile configurations:

    a. Fillet: Figure 5.
    b. Bridge: Figure 6.
    c. Butt: Figure 8A (concave tooling), generally hour-glass shape with 2:1 width-to-depth ratio.

C. Sprayed Foam Insulating Gap Filler: Apply sprayed foam insulating gap filler within exterior wall assemblies using professional hand-held dispensing gun in accordance with manufacturer's written instructions.

1. Prior to installation of wall finish systems, apply sprayed foam insulating gap filler to gaps, cracks, cavities, openings, and voids in exterior wall back-up, including annular space around piping, ducts, conduits, wiring, and electrical outlets to seal off potential air drafts.
2. After sprayed foam sealant is applied, make flush with face of adjacent wall by using method recommended by manufacturer.

3.5 FIELD QUALITY CONTROL

A. Manufacturer's Field Service: Manufacturer's qualified technical representative shall periodically inspect Work to ensure installation is proceeding in accordance with manufacturer's designs, recommendations, instructions, and warranty requirements. Representative shall submit written reports of each visit indicating observations, findings, and conclusions of inspection.

1. Manufacturer's Technical Representative Qualifications: Direct employee of technical services department of manufacturer with experience in providing recommendations, observations, evaluations, and problem diagnostics.

B. Field Adhesion Testing: Before installation, field test urethane and silicone sealant adhesion to joint substrates as follows:

1. General Requirements:

   a. Locate test joints where indicated or, if not indicated, as directed by Architect.
   b. Conduct field tests for each kind of urethane and silicone sealants and joint substrates indicated.
   c. Notify Architect 7 days in advance of dates and times when test joints will be erected.

2. Test Frequency: Perform 1 test for each 1000 ft (300 m) of joint length thereafter or 1 test for each floor at each elevation.
3. Test Methods: Joint sealant manufacturer's technical representative shall conduct following tests:

   a. When Joint Substrates are Identical: Test joint sealants according to ASTM C 1193, Method A (field-applied sealant joint hand pull tab) described below:

      1) Conduct one test and one additional test for each 1000 ft (300 m) of kind of joint sealant material and substrate conditions.
      2) Install 24 in (600 mm) long test specimens using same materials, methods for joint preparation, and joint sealant installation required for Work. Allow sealants to cure fully before testing.
      3) Make horizontal knife cut across width of sealant joint from one substrate to other substrate.
      4) Make 2 vertical cuts at both sides of substrates, downward starting at horizontal cut, approximately 3 in (75 mm) long.
      5) Grasp 3 in (75 mm) long piece of sealant tab firmly 1 in (25 mm) from its bonded edge and pull at not less than 90 degree angle.
      6) Substrate adhesion is acceptable if sealant tears cohesively within itself or elongates to a manufacturer determined extension value from 1 in (25 mm) gauge length before releasing from substrate adhesively.

   b. When Joint Substrates are Different: Test joint sealants according to ASTM C 1193, Method C (field-applied sealant joint hand pull flap) described below:

      1) Conduct one test and one additional test for each 1000 ft (300 m) of kind of joint sealant material and substrate conditions.
      2) Install 24 in (600 mm) long test specimens using same materials, methods for joint preparation, and joint sealant installation required for Work. Allow sealants to cure fully before testing.
      3) Make first horizontal knife cut across width of sealant joint from one substrate to other substrate.
      4) Make one vertical cut along one side of substrate, downward starting at horizontal cut, approximately 3 in (75 mm) long.
      5) Make second horizontal knife cut across width of sealant joint from one substrate to other substrate at opposite end of 3 in (75 mm) long first cut.
      6) Grasp 3 in (75 mm) long piece of sealant flap firmly and pull at not less than 90 degree angle.

7) Substrate adhesion is acceptable if sealant tears cohesively within itself or elongates to a manufacturer determined extension value from 1 in (25 mm) gauge length before releasing from substrate adhesively.

4. Reports: Report which sealants and joint preparation methods resulted in optimum adhesion to joint substrates or whether sealant failed to adhere to joint substrates or tore cohesively. Include data on pull distance used to test each specimen. For sealants that fail adhesively, retest until satisfactory adhesion is obtained.
5. Evaluation of Test Results: Sealants not evidencing adhesive failure from testing, in absence of other indications of non-compliance with requirements, will be considered satisfactory. Sealants failing to adhere to joint substrates during testing are not acceptable.

3.6 CLEANING

A. In-Progress Cleaning: Remove excess sealant or sealant smears adjacent to joints as Work progresses by methods and with cleaning materials approved in writing by manufacturers of joint sealants and of products in which joints occur.

3.7 PROTECTION

A. General Requirements: Protect during and after curing period from contact with contaminating substances and from damage resulting from construction operations or other causes so sealants are without deterioration or damage at time of Substantial Completion. If, despite such protection, damage or deterioration occurs, cut out and remove damaged or deteriorated joint sealants immediately so installations with repaired areas are indistinguishable from original Work.

3.8 JOINT SEALANT SCHEDULE

A. Exterior Elastomeric Sealant Applications:

1. Exterior Pourable Urethane Sealant:

   a. Moving joints in exterior concrete walks and drives.

2. Exterior Non-sag Silicone Sealant:

   a. Moving joints on exterior side of exterior walls.
   b. Gaps between building materials and components created by items penetrating the primary drainage surface of the exterior building envelope.
   c. Joints between dissimilar materials on exterior side of exterior walls.

B. Interior Elastomeric Sealant Applications:

1. Interior Non-sag Silicone Sealant:

   a. Non-moving joints in moist or damp areas which are susceptible to mildew.
   b. Non-moving joints in toilet rooms.
   c. Non-moving joints in kitchens.
   d. Non-moving joints in repeated contact with food.

2. Interior Non-sag Urethane Sealant:

a. Building joints on interior side of exterior walls where joint movement is anticipated.

3. Interior Non-sag Acrylic Latex Sealant:

a. Non-moving joints where another type of sealant is not otherwise specified or scheduled.
b. Minimal moving joints due to temperature change.

C. Sprayed Foam Insulating Gap Filler Applications:

1. Exterior non-moving gaps around windows, glazed aluminum walls, doors, and penetrations beneath weather-resistant coverings.
2. Interior non-moving gaps around windows, glazed aluminum walls, doors, and penetrations.

D. Exterior/Interior High-Temperature Silicone Sealant:

1. High-temperature exterior or interior locations.

3.9 COLOR SCHEDULE

A. Sealant Colors:

1. Exterior Pourable Urethane Sealant:
   a. Color Selection: As selected from Manufacturer's Standard Colors.

2. Exterior Non-Sag Silicone Sealant:
   a. Color Selection: As selected from Manufacturer's Standard Colors.

3. Exterior Non-Sag Urethane Sealant for Precast Concrete Seating Bowl:
   a. Color Selection: As selected from Manufacturer's Standard Colors.

4. Interior Non-Sag Silicone Sealant:
   a. Color Selection: As selected from Manufacturer's Standard Colors.

5. Interior Non-Sag Urethane Sealant:
   a. Color Selection: As selected from Manufacturer's Standard Colors.

6. Interior Non-Sag Acrylic Latex Sealant:
   a. Color Selection: As selected from Manufacturer's Standard Colors.

END OF SECTION

SECTION 08 1113

HOLLOW METAL DOORS AND FRAMES

PART 1 - GENERAL

1.1 SUMMARY

A. Section Includes: Custom hollow metal doors and frames and supplementary items necessary for installation.

1.2 DEFINITIONS

A. Custom Hollow Metal Work: Hollow metal work fabricated according to ANSI/NAAMM-HMMA 861.

B. Exterior: Areas exposed to the elements and areas located in unconditioned spaces.

C. Interior: Areas located in conditioned spaces.

1.3 ACTION SUBMITTALS

A. Product Data: Manufacturer's technical literature for each product and system indicated.

1. Include manufacturer's specifications for materials, finishes, construction details, installation instructions, and recommendations for maintenance.

B. Shop Drawings: Show details of fabrication and installation, including plans, elevations, sections, details of components and attachments to other work. Distinguish between shop and field-assembled work.

C. Samples for Verification Purposes: Submit 12 in by 12 in (300 mm by 300 mm) samples to demonstrate compliance with requirements for quality of materials and construction:

1. Doors: Show vertical-edge, top, and bottom construction; core construction; and hinge and other applied hardware reinforcement. Include separate section showing glazing if applicable.
2. Frames: Show profile, head-to-jamb corner joint, floor and wall anchors, and silencers. Include separate section showing fixed hollow metal panels and glazing if applicable.

D. Door and Frame Schedule: Schedule prepared by or under supervision of supplier, using same reference numbers for details and openings as those on Drawings. Coordinate with door hardware schedule.

1.4 INFORMATIONAL SUBMITTALS

A. Oversize Construction Certification: Documentation for assemblies required to be fire rated and exceeding limitations of labeled assemblies.

B. Product Test Reports: Written reports based on evaluation of comprehensive tests performed by qualified testing agency indicating that each product complies with requirements.

C. Qualification Data:

1. For firms and persons specified in "Quality Assurance" to demonstrate their capabilities and experience. Include list of completed projects.

1.5 QUALITY ASSURANCE

A. Manufacturer Qualifications: Manufacturer with not less than 5 years of experience in the successful production and in-service performance of products and systems similar to scope of this Project.

B. Installer Qualifications:

1. Experience: Installer's personnel with not less than 5 years of experience in the successful performance of Work similar to scope of this Project.
2. Supervision: Installer shall maintain a competent supervisor at Project while the Work is in progress, and who has not less than 5 years of experience installing products and systems similar to scope of this Project.

1.6 PRE-INSTALLATION CONFERENCE

A. Pre-Installation Conference: Before Work begins, conduct conference at Project site.

1. Participants:

a. Architect.
b. Contractor, including superintendent.
c. Installer, including project manager and supervisor.
d. If requested, Manufacturer's qualified technical representative.
e. Installers of other construction interfaced with Work.

2. Minimum Agenda: Installer shall demonstrate understanding of the Work required by describing detailed procedures for preparing, installing, and cleaning the Work. Demonstration shall include, but not be limited to, following topics:

a. Tour representative areas of Work, inspect and discuss condition of substrate, and other preparatory work performed by other trades.
b. Review Contract Document requirements.
c. Review approved submittals.
d. Review inspection and testing requirements.
e. Review environmental conditions and procedures for coping with unfavorable conditions.
f. Resolve deviations or differences between Contract Documents and the manufacturer's specifications.

3. Record discussions, including decisions and agreements, and prepare report.

1.7 DELIVERY, STORAGE, AND HANDLING

A. Deliver hollow metal work palletized, wrapped, or crated to provide protection during transit and Project site storage. Do not use non-vented plastic.

B. Store hollow metal work under cover at Project site. Place in stacks of five units maximum in a vertical position with heads up, spaced by blocking, on minimum 4 in (100 mm) high wood blocking. Do not store in a manner that traps excess humidity.

1. Provide minimum 1/4 in (6 mm) space between each stacked door to permit air circulation.

1.8 PROJECT CONDITIONS

A. Field Measurements: Where products and systems are indicated to fit walls and other construction, verify dimensions by field measurements before fabrication.

1.9 COORDINATION

A. Coordinate installation of products and systems with interfacing and adjoining construction to provide a successful installation without failure.

B. Coordinate installation of anchorages for hollow metal frames. Furnish setting drawings, templates, and directions for installing anchorages, including sleeves, concrete inserts, anchor bolts, and items with integral anchors. Deliver such items to Project site in time for installation.

PART 2 - PRODUCTS

2.1 MATERIALS, GENERAL

A. Single Source Responsibility: Furnish each type of product from single manufacturer. Provide secondary materials only as recommended by manufacturer of primary materials.

2.2 PERFORMANCE REQUIREMENTS

A. General Performance: Engineer products and systems to withstand loads within limits of allowable working stresses of the materials involved under conditions indicated and without permanent deformation or failure of materials.

B. Fire-Rated Door Assemblies: Assemblies complying with NFPA 80 that are listed and labeled by a qualified testing agency, for fire-protection ratings indicated, based on testing at positive pressure according to NFPA 252 or UL 10C.

1. Oversize Fire-Rated Door Assemblies: For units exceeding sizes of tested assemblies provide certification by a qualified testing agency that doors comply with standard construction requirements for tested and labeled fire-rated door assemblies except for size.

C. Fire-Rated, Borrowed-Light Frame Assemblies: Assemblies complying with NFPA 80 that are listed and labeled, by a testing and inspecting agency acceptable to authorities having jurisdiction, for fire-protection ratings indicated, based on testing according to NFPA 257 or UL 9. Label each individual glazed lite.

D. Smoke-Control Door Assemblies: Assemblies complying with UL 1784.

E. Exterior Door Air Infiltration: Maximum air leakage of 1.0 cfm/sf (5.08 L/s per sq m) when tested according to ASTM E 283 at a minimum static-air-pressure difference of 1.57 lbf/sf (75 Pa) .

F. Windborne-Debris-Impact-Resistance Performance: Comply with impact resistance testing requirements for Wind Zone.

2.3 COMPONENT MATERIALS

A. Cold-Rolled Steel Sheet: ASTM A 1008 / A 1008M, Designation CS (Commercial Steel), Type B; suitable for exposed applications.

B. Hot-Rolled Steel Sheet: ASTM A 1011 / A 1011M, Designation CS (Commercial Steel), Type B; free of scale, pitting, or surface defects; pickled and oiled.

C. Metallic-Coated Steel Sheet: ASTM A 653 / A 653M, Designation CS (Commercial Steel), Type B; with minimum G60 (Z180) or A60 (ZF180) metallic coating. Thickness indicated is for uncoated steel.

D. Frame Anchors: ASTM A 591 / A 591M, Commercial Steel (CS), 40Z (12G) coating designation; mill phosphatized.

1. For anchors built into exterior walls, steel sheet complying with ASTM A 1008 / A 1008M or ASTM A 1011 / A 1011M, hot-dip galvanized according to ASTM A 153 / A 153M, Class B.

E. Inserts, Bolts, and Fasteners: Device type and size required, hot-dip galvanized according to ASTM A 153 / A 153M, Class B.

F. Fasteners into Concrete:

1. Powder-Actuated Fasteners: Suitable for application indicated, ANSI A 10.3; low velocity, powder-actuated fasteners; drive pins and clip angles fabricated from corrosion-resistant materials, with clips or other devices for attaching frames into concrete substrate.
2. Available Manufacturers:

    a. Construction Materials, Inc.
    b. Heckman Building Products, Inc.

3. Post-Tensioned Concrete: For post-tensioned concrete, fasteners shall not exceed 1 in (25 mm) embedment. Obtain Structural Engineer's written approval for all proposed fasteners in post-tensioned concrete prior to installation.

G. Mineral-Fiber Insulation for Installations in Sound-Rated Partitions: ASTM C 665, Type I (blankets without membrane facing); consisting of fibers manufactured from slag or rock wool with 6 to 12 lb/cu ft (96 to 192 kg/cu m) density; with following characteristics:

1. Flame-Spread Index: 25 maximum.
2. Smoke Development Index: 50 maximum.
3. Combustion Characteristics: Passing ASTM E 136.

H. Glazing: Comply with Division 08 Section "Glazing".

I. Primer: Fast-curing, corrosion-inhibiting, lead and chromate free, universal primer complying with ANSI A224.1 acceptance criteria; compatible with substrate and field-applied finish paint system specified in Division 09 Section “Painting”.

J. Galvanizing Repair Paint: SSPC-Paint 20 or DOD-P-21035, with dry film containing minimum of 94 percent zinc dust by weight.

2.4 FABRICATION, GENERAL

A. Fabrication Quality Standard: ANSI/NAAMM-HMMA 861.

B. General Requirements: Fabricate hollow metal work to be rigid and free of defects, warp, or buckle. Accurately form metal to required sizes and profiles, with minimum radius for thickness of metal. Where practical, fit, and assemble units in manufacturer's plant.

C. Accessories: Fabricate concealed stiffeners, edge channels, and hardware reinforcement from either cold- or hot-rolled steel sheet.

D. Hardware Preparation: Factory prepare hollow metal work to receive templated mortised hardware; include cutouts, reinforcement, mortising, drilling, and tapping according to templates furnished as specified in Division 08 Section "Door Hardware".

1. Locate hardware according to ANSI/NAAMM-HMMA 861.
2. Reinforce doors and frames to receive non-templated, mortised, and surface-mounted door hardware.
3. Comply with applicable requirements in ANSI/DHI A115 Series specifications for preparation of hollow metal work for hardware.
4. Coordinate locations of conduit and wiring boxes for electrical connections with Division 26 Sections.

2.5 HOLLOW METAL DOORS

A. Fabrication Provisions: Fabricate doors not less than 1-3/4 in (44 mm) thick, of seamless hollow construction unless otherwise indicated. Construct doors with smooth surfaces without visible joints or seams on exposed faces.

1. Glazed Lites: Factory cut openings in doors.

B. Door Face Sheets:

1. Metallic-coated steel sheet, minimum 0.053 in (1.3 mm) (16 gage) thick for doors in the following locations:

   a. Exterior doors.

2. Cold-rolled steel sheet, minimum 0.042 in (1.10 mm) (18 gage) thick for doors in the following locations:

   a. Interior doors.

C. Core Construction:

1. Steel-Stiffened Core: 0.026 in (0.7 mm) (22 gage) thick, steel vertical stiffeners of same material as face sheets extending full-door height, with vertical webs spaced not more than 6 in (150 mm) apart, spot welded to face sheets a maximum of 5 in (125 mm) on centers. Spaces filled between stiffeners with mineral-fiber insulation.
2. Fire Door Core: As required to provide fire-protection indicated.

3. Thermal-Rated (Insulated) Core: Typical at Exterior doors and otherwise indicated, provide doors fabricated with thermal-resistance value (R-value) of not less than 4.0 deg F by h by sq ft/Btu (0.704 K by sq m/W) according to ASTM C 1363.

D. Vertical Edges:

1. Single Acting Doors: Beveled 1/8 in in 2 in (3 mm in 50 mm).
2. Double Acting Doors: Round vertical edges with 2-1/8 in (53 mm) radius.

E. Top and Bottom Channels: Closed with continuous channels, minimum 0.053 in (1.3 mm) (16 gage) thick, of same material as face sheets and spot welded to both face sheets.

1. Spot weld metal channel not more than 6 inches (150 mm) on center.

F. Exterior doors shall be closed flush at the top edge. Seal joints in top edges of door against water penetration. Where required for attachment for weatherstripping, a flush closure channel shall also be provided at the bottom edge.

1. Openings shall be provided in the bottom closure channel of exterior doors to permit the escape of trapped moisture.

G. Hardware Reinforcement: Fabricate from same material as door. Minimum thickness of steel reinforcing plates for following hardware:

1. Hinges and Pivots: 0.167 in (4.2 mm) (7 gage) thick by 1-1/2 in wide by 6 in (38 mm by 150 mm) longer than hinge, secured by not less than 6 spot welds.
2. Strikes, Flush Bolts, and Closers: 0.093 in (2.3 mm) (12 gage).
3. Surface-Mounted Hold-Open Arms and Panic Devices: 0.093 in (2.3 mm) (12 gage).

H. Glass Molding and Stops: Provide frame for glazed openings between face sheets continuously around perimeter of glass opening and weld to face sheets.

1. Form frame with integrally formed stop on security side.
2. Miter corners, weld, and grind smooth.
3. Do not overlap frame molding on face of door.
4. Use same materials as door face sheet for frame and loose stop for flush glazing.

I. Louvers: Stationary louvers constructed with inverted V-shaped or Y-shaped blades with blades or baffles and frame formed of same materials as door face sheet. Fabricate louvers and mount flush into doors without overlapping moldings on surface of door face sheets. Provide internal support recommended by manufacturer. Provide louvers with minimum of 50% free air area.

1. Automatic Louvers at Fire-Rated Doors: Louvers constructed with movable blades closed by actuating fusible link, and listed and labeled for use in fire-rated door assemblies of type and fire-resistance rating indicated by same testing and inspecting agency that established fire-resistance rating of door assembly.

J. Transom Panels: Provide panels of same materials, construction, and finish as specified for doors.

2.6 HOLLOW METAL FRAMES

A. Fabrication Provisions:

1. Fabricate frames of construction indicated below.
2. Close contact edges of corner joints tight with faces mitered and full-profile continuously welded.

    a. "Knock-down" frame construction is not acceptable and shall not be used.

3. Close contact edges of stops butted or mitered.
4. Where frames are fabricated in sections due to shipping or handling limitations, provide alignment plates or angles at each joint, fabricated of same thickness metal as frames.

B. Joinery:

1. Fabrication Quality Standard: Head-to-jamb joints according to ANSI/NAAMM-HMMA 820 for either of following fabrication techniques with:

    a. Saw-mitered corners, full-profile continuously welded.
    b. Machine-mitered corners, full-profile continuously welded.

2. Externally or internally weld flush face joints continuously; grind, fill, dress, and make smooth, flush, and seamless.
3. Internally weld rabbet and soffits continuously; grind, fill, dress, and make smooth.
4. Use of gusset or splice plates as substitute for fully welding is not permitted.

C. Materials and Thickness:

1. Metallic-coated steel sheet, 0.067 in (1.7 mm) (14 gage) thick for frames in the following locations:

    a. Exterior frames.

2. Cold-rolled steel sheet for frames in the following locations:

    a. Interior frames.

3. Thickness for Cold-Rolled Steel Sheet Frames:

    a. 48 in (1200 mm) Wide or Less: 0.053 in (1.3 mm) (16 gage) thick.
    b. More than 48 in (1200 mm) Wide: 0.067 inch (1.7 mm) (14 gage) thick.

4. Sidelight and Transom Frames: Closed tubular members with no visible face seams or joints fabricated from same type and thickness of material as adjacent door frame.
5. Interior Borrowed-Light Frames: Fabricated from 0.053 in (1.3 mm) (16 gage) thick cold-rolled steel sheet.

D. Stops and Moldings:

1. Form corners with butted or mitered hairline joints.
2. Provide around glazed lites where indicated.

    a. Fixed frame moldings on outside of exterior doors and frames and on secure side of interior doors and frames.
    b. Loose stops and moldings on inside of hollow metal work so that glass can be removed independently.

3. Coordinate rabbet width between fixed and removable stops with type of glazing and type of installation indicated.

E. Hardware Reinforcement: Fabricate from same material as frame. Minimum thickness of steel reinforcing plates for following hardware:

1. Hinges and Pivots: 0.167 in (4.2 mm) (7 gage) thick by 1-1/2 in wide by 6 in (38 mm by 150 mm) longer than hinge, secured by not less than 6 spot welds.
2. Strikes, Flush Bolts, and Closers: 0.093 in (2.3 mm) (12 gage).
3. Surface-Mounted Hold-Open Arms and Panic Devices: 0.093 in (2.3 mm) (12 gage).

F. Head Reinforcement: Provide minimum 0.093 in (2.3 mm) (12 gage) thick, steel channel or angle stiffener for opening widths more than 48 in (1200 mm).

G. Jamb Anchors:

1. Types: Fabricated of same material as frame:

a. Stud-Wall Type: Designed to engage stud, welded to back of frames; not less than 0.042 in (1.10 mm) (18 gage) thick.
b. Masonry Type: Adjustable strap-and-stirrup or T-shaped anchors to suit frame size, not less than 0.042 in (1.10 mm) (18 gage) thick, with corrugated or perforated straps not less than 2 in (50 mm) wide by 10 in (250 mm) long.
c. Postinstalled Expansion Type for In-Place Concrete or Masonry: Countersunk, flat or oval head exposed screws and bolts with expansion shields or inserts, minimum 3/8 in (10 mm) diameter bolts. Provide pipe spacer from frame to wall, with throat reinforcement plate, welded to frame at each anchor location.

2. Quantity and Location:

a. Stud-Wall Type: Locate anchors not more than 18 in (450 mm) from top and bottom of frame. Space anchors not more than 32 in (800 mm) on centers and as follows:

1) Three anchors per jamb up to 60 in (1500 mm) high.
2) Four anchors per jamb from 60 to 90 in (1500 to 2250 mm) high.
3) Five anchors per jamb from 90 to 96 in (2250 to 2400 mm) high.
4) Five anchors per jamb plus 1 additional anchor per jamb for each 24 in (600 mm) or fraction thereof above 96 in (2400 mm) high.
5) Two anchors per head for frames above 42 in (1050 mm) wide and mounted in metal-stud partitions.

b. Masonry Type: Locate anchors not more than 18 in (450 mm) from top and bottom of frame. Space anchors not more than 32 in (800 mm) on centers and as follows:

1) Two anchors per jamb up to 60 in (1500 mm) high.
2) Three anchors per jamb from 60 to 90 in (1500 to 2250 mm) high.
3) Four anchors per jamb from 90 to 120 in (2250 to 3000 mm) high.
4) Four anchors per jamb plus 1 additional anchor per jamb for each 24 in (600 mm) or fraction thereof above 120 in (3000 mm) high.

c. Postinstalled Expansion Type for In-Place Concrete or Masonry: Locate anchors not more than 6 in (150 mm) from top and bottom of frame and not more than 26 in (650 mm) on centers.

H. Floor Anchors: Formed from same material as frames welded to bottom of jambs and mullions with not less than 4 spot welds, not less than 0.0428 in (1.10 mm) (18 gage) thick, and as follows, terminating bottom of frames at finish floor surface:

1. Monolithic Concrete Slabs: Clip type anchors, with two holes to receive fasteners.
2. Separate Topping Concrete Slabs: Adjustable type anchors with extension clips, allowing not less than 2 in (50 mm) height adjustment.

I. Shipping Spreader Bars: Attach two removable metal spreader bars across bottom of frames, tack welded to jambs and mullions.

J. Door Silencers: Except on weatherstripped doors, drill holes to receive door silencers furnished under Division 08 Section "Door Hardware". Keep holes clear during construction.

1. Single-Door Frames: Strike jamb for 3 door silencers.
2. Double-Door Frames: Head jamb for 2 door silencers.

2.7 STEEL FINISHES

A. Comply with NAAMM's "Metal Finishes Manual for Architectural and Metal Products" for recommendations for cleaning, treating, priming, and when specified, finishing.

B. Finish products specified in this Section after fabrication.

C. Metallic-Coated Steel Surface Preparation: Clean surfaces with non-petroleum solvent so surfaces are free of oil and other contaminants. After cleaning, apply a conversion coating suited to primer to be applied over it. Clean welds, mechanical connections, and abraded areas, and apply galvanizing repair paint specified below to comply with ASTM A 780.

1. Galvanizing Repair Paint: High-zinc-dust-content paint for regalvanizing welds in steel, complying with SSPC-Paint 20.

D. Non-Coated Steel Surface Preparation: Clean surfaces to comply with SSPC-SP 1, "Solvent Cleaning"; remove dirt, oil, grease, or other contaminants that could impair paint bond. Remove mill scale and rust, if present, from uncoated steel, complying with SSPC-SP 3, "Power Tool Cleaning," or SSPC-SP 6/NACE No. 3, "Commercial Blast Cleaning."

E. Prime Coat Finish: Apply manufacturer's standard primer specified below immediately after surface preparation and pretreatment.

1. Shop Primer: Manufacturer's standard, fast-curing, lead- and chromate-free primer complying with ANSI/SDI A250.10 acceptance criteria; recommended by primer manufacturer for substrate; compatible with substrate and field-applied coatings despite prolonged exposure.

F. Field-Applied Coatings: As specified in Division 09 Section "Painting".

PART 3 - EXECUTION

3.1 EXAMINATION

A. Acceptance of Surfaces and Conditions: Examine substrates to receive products and systems and associated work for compliance with requirements and other conditions affecting performance. Proceed only when unsatisfactory conditions have been corrected in a manner complying with Contract Documents. Starting work within a particular area will be construed as acceptance of surface conditions.

3.2 INSTALLATION, GENERAL

A. Installation Quality Standards: In addition to standards listed elsewhere, perform Work according to following, unless otherwise specified:

1. ANSI/NAAMM-HMMA 840.
2. NFPA 80 for fire-rated doors and frames.
3. NFPA 105 for smoke control doors and frames.
4. DHI A115.IG.
5. Respective manufacturer's written installation instructions.
6. Accepted submittals.
7. Contract Documents.

3.3 PREPARATION

A. General: Comply with manufacturer's instructions, recommendations, and specifications for cleaning and surface preparation. Surfaces shall have no defects, contaminants, or errors which would result in poor or potentially defective installation or would cause latent defects in Work.

B. Pre-Installation Tolerances: Prior to installation, adjust and securely brace hollow metal frames for squareness, alignment, twist, and plumbness to following:

1. Squareness: Plus or minus 1/16 in (1.5 mm), measured at door rabbet on a line 90 degrees from jamb perpendicular to frame head.
2. Alignment: Plus or minus 1/16 in (1.5 mm), measured at jambs on a horizontal line parallel to plane of wall.
3. Twist: Plus or minus 1/16 in (1.5 mm), measured at opposite face corners of jambs on parallel lines, and perpendicular to plane of wall.
4. Plumbness: Plus or minus 1/16 in (1.5 mm), measured at jambs on a perpendicular line from head to floor.

C. Hardware Preparation: Drill and tap doors and frames to receive non-templated, mortised, and surface-mounted door hardware.

3.4 INSTALLATION OF HOLLOW METAL DOORS AND FRAMES

A. Hollow Metal Frames: Install hollow metal frames of size and profile indicated.

1. Setting: Set frames accurately in position, plumbed, aligned, and braced securely until permanent anchors are set. After wall construction is complete, remove temporary braces and welded-in shipping spreader bars. Restore exposed finish by grinding, filling, and dressing, as required to make repaired area smooth, flush, and invisible on exposed faces.

a. Where frames are fabricated in sections because of shipping or handling limitations, field splice at approved locations by welding face joint continuously; grind, fill, dress, and make splice smooth, flush, and invisible on exposed faces.
b. Install frames with removable glazing stops located on secure side of opening.
c. Install door silencers in frames before grouting.
d. Check plumbness, squareness, and twist of frames as walls are constructed. Shim as necessary to comply with installation tolerances.

2. Floor Anchors: Provide floor anchors for each jamb and mullion that extends to floor, and secure with post-installed expansion anchors or powder actuated fasteners.
3. Sound-Rated Partitions: Solidly pack mineral-fiber insulation behind frames.
4. Exterior Walls: Solidly fill space between frames and wall construction with mineral-fiber insulation unless indicated otherwise.
5. In-Place Masonry or Concrete Construction: Secure frames in place with post-installed expansion anchors. Countersink anchors, and fill and make smooth, flush, and invisible on exposed faces.
6. Ceiling Struts: Extend struts vertically from top of frame at each jamb to overhead structural supports or substrates above frame unless frame is anchored to masonry or to other structural support at each jamb. Bend top of struts to provide flush contact for securing to supporting construction. Provide adjustable wedged or bolted anchorage to frame jamb members.
7. Installation Tolerances: Adjust hollow metal frames for squareness, alignment, twist, and plumb to following:

a. Squareness: Plus or minus 1/16 in (1.5 mm), measured at rabbet on a line 90 degrees from jamb perpendicular to frame head.
b. Alignment: Plus or minus 1/16 in (1.5 mm), measured at jambs on a horizontal line parallel to plane of wall.
c. Twist: Plus or minus 1/16 in (1.5 mm), measured at opposite face corners of jambs on parallel lines, and perpendicular to plane of wall.
d. Plumbness: Plus or minus 1/16 in (1.5 mm), measured at jambs at floor.

B. Hollow Metal Doors: Provide insulated doors at exterior and non-insulated at interior locations. Fit accurately in frames, within following clearances:

1. Jambs and Head: 1/8 in (3 mm) plus or minus 1/16 in (1.5 mm).
2. Between Edges of Pairs of Doors: 1/8 in (3 mm) plus or minus 1/16 in (1.5 mm).
3. Between Bottom of Door and Top of Threshold: Maximum 3/8 in (10 mm).
4. Between Bottom of Door and Top of Finish Floor Covering or Top of Structure (No Threshold): Maximum 3/4 in (19 mm).

C. Glazing:

1. Comply with installation requirements in Division 08 Section "Glazing".
2. Secure stops with countersunk flat or oval head machine screws spaced uniformly not more than 6 in (150 mm) on center and not more than 2 in (50 mm) on centers from each corner.

3.5 ADJUSTMENTS

A. Final Adjustments: Remove and replace defective hollow metal work, including work that is warped, bowed, or otherwise unacceptable.

B. Prime Coat Touchup: Immediately after erection, sand smooth rusted or damaged areas of prime coat and apply touchup of primer compatible with paint specified in Division 09 Section "Painting".

C. Metallic-Coated Surfaces: Prepare and repair damaged galvanized coatings on fabricated and installed hollow metal work with galvanized repair paint according to ASTM A 780 and manufacturer's written instructions.

D. Field-Applied Coatings: As specified in Division 09 Section "Painting".

END OF SECTION

SECTION 08 1216

INTERIOR ALUMINUM FRAMES

PART 1 - GENERAL

1.1 SUMMARY

A. Section includes interior aluminum frames for doors and glazing installed in gypsum board partitions and supplementary items necessary for installation.

B. Related Section:

1. Division 08 Section "Interior Storefront" for interior aluminum storefront installations.

1.2 ACTION SUBMITTALS

A. Product Data: Manufacturer's technical literature for each product and system indicated.

1. Include manufacturer's specifications for materials, fire-rating (if applicable) finishes, construction details, installation instructions, and recommendations for maintenance.

B. Shop Drawings: Show details of fabrication and installation, including plans, elevations, sections, details of components and attachments to other work. Distinguish between shop and field-assembled work. Include the following:

1. Frame details for each frame type, including dimensioned profiles and metal thicknesses.
2. Locations of reinforcements and preparations for hardware.
3. Details of each different wall-opening condition.
4. Details of anchorages, joints, field splices, and connections.
5. Details of accessories.
6. Details of moldings, removable stops, and glazing.
7. Details of conduits and preparations for power, signal, and control systems.

C. Samples for Initial Selection: For units with factory-applied finishes.

1. Include similar Samples of seals, gaskets, and accessories involving color selection.

D. Samples for Verification: For each type of exposed finish required, prepared on Samples of size indicated below:

1. Framing Member: 12 in (300 mm) long.
2. Corner Fabrication: 12 by 12 in (300 by 300 mm) long, full-size window corner, including full-size sections of extrusions with factory-applied color finish.

E. Schedule: Use same designations indicated on Drawings. Coordinate with door hardware schedule and glazing.

1.3 INFORMATIONAL SUBMITTALS

A. Product Test Reports for Fire-Rated Assemblies : Written reports based on evaluation of comprehensive tests performed by qualified testing agency indicating that each product complies with requirements.

B. Qualification Data:

1. For firms and persons specified in "Quality Assurance" to demonstrate their capabilities and experience. Include list of completed projects.

1.4 CLOSEOUT SUBMITTALS

A. Maintenance Data: To include in maintenance manuals.

1.5 QUALITY ASSURANCE

A. Manufacturer Qualifications: Manufacturer with not less than 10years of experience in the successful production and in-service performance of products and systems similar to scope of this Project.

B. Fire-Rated Assemblies: Assemblies complying with NFPA 80 that are listed and labeled by a qualified testing agency, for fire-protection ratings indicated, based on testing at positive pressure according to NFPA 252 or UL 10C.

C. Smoke- and Draft-Control Assemblies: At corridors, smoke barriers, and smoke partitions, provide assemblies tested according to UL 1784 and installed in compliance with NFPA 105.

1. Air Leakage Rate: Maximum air leakage of 0.3 cfm/sq. ft. (3 cu. m per minute/sq. m) at the tested pressure differential of 0.3-inch wg (75 Pa) of water.

1.6 PROJECT CONDITIONS

A. Field Measurements: Where products and systems are indicated to fit walls and other construction, verify dimensions by field measurements before fabrication.

1.7 COORDINATION

A. Coordinate installation of products and systems with interfacing and adjoining construction to provide a successful installation without failure.

1.8 DELIVERY, STORAGE, AND HANDLING

A. Deliver frames palletized, wrapped, or crated to provide protection during transit and Project-site storage. Do not use nonvented plastic. Store frames under cover at Project site.

PART 2 - PRODUCTS

2.1 MANUFACTURERS AND PRODUCTS

A. Acceptable Manufacturers: Subject to compliance with requirements of Contract Documents as judged by the Architect, provide product by one of manufacturers listed. If not listed, submit as substitution according to the Conditions of the Contract and Division 01 Section "Substitution Procedures".

B. Available Manufacturers: Subject to compliance with requirements of Contract Documents as judged by the Architect, manufacturers offering products that may be incorporated into the Work include, but are not limited to, those listed.

1. Dual Lock Partition Systems, Inc.; Avalon International Aluminum.
2. Frameworks Manufacturing Inc.; a Div. of ASSA ABLOY.
3. RACO Interior Products, Inc.
4. Western Integrated Materials, Inc.
5. Wilson Partitions.

2.2 MATERIALS, GENERAL

A. Single Source Responsibility: Furnish each type of product from single manufacturer. Provide secondary materials only as recommended by manufacturer of primary materials.

2.3 COMPONENTS

A. Aluminum Framing: ASTM B 221 (ASTM B 221M), Alloy 6063-T5 or alloy and temper required to suit structural and finish requirements, not less than 0.062 in (1.6 mm) thick.

B. Door Frames: Extruded aluminum, reinforced for hinges, strikes, and closers.

1. Fire-Protection Rating: Fabricate aluminum frame assemblies with a cold-formed, primed, interior steel liner.

C. Glazing Frames: Extruded aluminum, for glazing thickness indicated.

D. Ceiling Tracks: Extruded aluminum.

E. Trim: Extruded aluminum, not less than 0.062 in (1.6 mm) thick, with removable snap-in casing trim, glazing stops, and door stops without exposed fasteners.

2.4 ACCESSORIES

A. Fasteners: Aluminum, nonmagnetic, stainless-steel or other noncorrosive metal fasteners compatible with frames, stops, panels, reinforcement plates, hardware, anchors, and other items being fastened.

B. Door Silencers: Manufacturer's standard continuous mohair, wool pile, or vinyl seals.

C. Smoke Seals for Fire-Rated Installations: Intumescent strip or fire-rated gaskets.

1. Color:

D. Glazing Gaskets: Manufacturer's standard extruded or molded plastic, to accommodate glazing thickness indicated.

E. Glazing: Comply with requirements in Division 08 Section "Glazing."

F. Hardware: Comply with requirements in Division 08 Section "Door Hardware".

2.5 FABRICATION

A. Provide concealed corner reinforcements and alignment clips for accurately fitted hairline joints at butted or mitered connections.

B. Factory prepare interior aluminum frames to receive templated mortised hardware; include cutouts, reinforcements, mortising, drilling, and tapping, according to the Door Hardware Schedule and templates furnished as specified in Division 08 Section "Door Hardware."

1. Fire-Rated Installations: Locate hardware as required by fire-rated label for assembly.

C. Fabricate frames for glazing with removable stops to allow glazing replacement without dismantling frame.

1. Locate removable stops on the inside of spaces accessed by keyed doors.

D. Fabricate components to allow secure installation without exposed fasteners.

2.6 GENERAL FINISH REQUIREMENTS

A. Comply with NAAMM's "Metal Finishes Manual for Architectural and Metal Products" for recommendations for applying and designating finishes.

B. Appearance of Finished Work: Noticeable variations in same piece are not acceptable. Variations in appearance of adjoining components are acceptable if they are within the range of approved Samples and are assembled or installed to minimize contrast.

2.7 ALUMINUM FINISHES

A. Clear Anodic Finish: AAMA 611, AA-M12C22A31, Class II, 0.010 mm or thicker.

B. Color Anodic Finish: AAMA 611, AA-M12C22A32/A34, Class II, 0.010 mm or thicker.

1. Color: As scheduled or as indicated in interior Design Selections.

C. Baked-Enamel or Powder-Coat Finish: AAMA 2603 except with a minimum dry-film thickness of 1.0 mils (0.025 mm). Comply with coating manufacturer's written instructions for cleaning, conversion coating, and applying and baking finish.

1. Color and Gloss: As scheduled or as indicated in interior Design Selections.

PART 3 - EXECUTION

3.1 EXAMINATION

A. Examine walls, floors, and ceilings, with Installer present, for conditions affecting performance of the Work.

B. Verify that wall thickness does not exceed standard tolerances allowed by throat size indicated.

C. Proceed with installation only after unsatisfactory conditions have been corrected.

3.2 INSTALLATION

A. General: Install interior aluminum frames plumb, rigid, properly aligned, and securely fastened in place; comply with manufacturer's written instructions.

B. Set frames accurately in position and plumbed, aligned, and securely anchored to substrates.

1. Fire-Rated and Smoke-Control Assemblies: At fire-protection-rated openings, install interior aluminum frames according to NFPA 80 and NFPA 105.

C. Install frame components in the longest possible lengths; components up to 96 in (2400 mm) long must be one piece.

1. Frames Supported by Suspended Ceiling: Fasten to suspended ceiling grid on maximum 48 in (1220 mm) centers, using sheet metal screws or other fasteners approved by frame manufacturer.
2. Use concealed installation clips to produce tightly fitted and aligned splices and connections.
3. Secure clips to extruded main-frame components and not to snap-in or trim members.
4. Do not leave screws or other fasteners exposed to view when installation is complete.

3.3 CLEANING

A. Clean exposed frame surfaces promptly after installation, using cleaning methods recommended by frame manufacturer and according to AAMA 609 & 610.

B. Touch up marred frame surfaces so touchup is not visible from a distance of 48 in (1200 mm). Remove and replace frames with damaged finish that cannot be satisfactorily repaired.

3.4 **FINISH SCHEDULE:** As indicated on Interior Finish Legend.

END OF SECTION

SECTION 08 1416

PREFINISHED FLUSH WOOD DOORS

PART 1 - GENERAL

1.1 SUMMARY

A. Section Includes: Prefinished flush wood doors and supplementary items necessary for installation.

1.2 ACTION SUBMITTALS

A. Product Data: Manufacturer's technical literature for each product and system indicated.

1. Include manufacturer's specifications for materials, finishes, construction details, installation instructions, and recommendations for maintenance.
2. Include details of core and edge construction, light frames, and trim for openings.
3. Include factory-finishing specifications.
4. Include manufacturer's surface preparation instructions.
5. Indicate scheduled fire doors that cannot qualify for labeling because of design, size, hardware or other reason.

B. Shop Drawings: Show details of fabrication and installation, including plans, elevations, sections, details of components and attachments to other work. Distinguish between shop and field-assembled work. Provide dimensioned drawings indicating location, size, and hand of each door; elevation of each kind of door; construction details not covered in Product Data; location and extent of hardware blocking; and other pertinent data.

1. Indicate dimensions and locations of mortises and holes for hardware.
2. Indicate dimensions and locations of cutouts.
3. Indicate requirements for door face matching.
4. Indicate doors to be factory finished and finish requirements.
5. Indicate fire-protection-ratings for fire-rated doors.

C. Samples for Initial Selection: Manufacturer's finish charts showing full range of colors and textures available for units with factory-applied finishes.

1. Wood Veneer Door Faces: Full range of colors available.
2. Opaque Finish Doors: Full range of colors available.
3. Plastic Laminate Door Faces: Full range of colors, textures, and patterns available.
4. Impact Resistant Panel Door Faces: Full range of colors, textures, and patterns available.

D. Samples for Verification Purposes: For each type of exposed finish required, prepared on Samples of size indicated below.

1. Wood Veneer Doors: Wood veneer factory finishes applied to actual door face materials, approximately 8 in by 10 in (200 mm by 250 mm), for each material and finish. For each wood species and transparent finish, provide set of 3 samples showing typical range of color and grain to be expected in finished work.

2. Opaque Finish Doors: Opaque door facing, 6 in (150 mm) square, for each color selected.
3. Plastic Laminate Doors: Plastic laminate door facing, 6 in (150 mm) square, for each color, texture, and pattern selected.
4. Impact Resistant Panel Doors: Impact resistant panel door facing, 6 in (150 mm) square, for each color, texture, and pattern selected.
5. Corner sections of doors, approximately 8 in by 10 in (200 mm by 250 mm), with door faces and edges representing actual materials to be used.

    a. Wood Veneer Doors: Samples for each species of wood veneer and solid lumber required.
    b. Opaque Finish Doors: Samples for each color selected.
    c. Plastic Laminate Doors: Samples for each color, texture, and pattern of plastic laminate door facing required.
    d. Impact Resistant Panel Doors: Samples for each color, texture, and pattern of impact resistant panel door facing required.
    e. Finish door facing samples with same materials proposed for factory-finished doors.

6. Light Frames: Frames for light openings, 6 in (150 mm) long, for each material, type, and finish required.
7. Door Louvers: Louver blade and frame sections, 6 in (150 mm) long, for each material and finish specified.

1.3 INFORMATIONAL SUBMITTALS

A. Product Test Reports: Written reports based on evaluation of comprehensive tests performed by qualified testing agency indicating that each product complies with requirements.

B. Qualification Data:

1. For firms and persons specified in "Quality Assurance" to demonstrate their capabilities and experience. Include list of completed projects.

C. Warranty: Sample of warranty.

1. Provide manufacturer's written warranty covering materials and installation (labor) stating obligations, remedies, limitations and exclusions.

1.4 CLOSEOUT SUBMITTALS

A. Maintenance Data: To include in maintenance manuals.

1.5 QUALITY ASSURANCE

A. Manufacturer Qualifications: Manufacturer with not less than 10 years of experience in the successful production and in-service performance of products and systems similar to scope of this Project.

1.6 PRE-INSTALLATION CONFERENCE

A. Pre-Installation Conference: Before Work begins, conduct conference at Project site.

1. Participants:

a. Architect.
b. Contractor, including superintendent.
c. Installer, including project manager and supervisor.
d. If requested, Manufacturer's qualified technical representative.
e. Installers of other construction interfaced with Work.

2. Minimum Agenda: Installer shall demonstrate understanding of the Work required by describing detailed procedures for preparing, installing, and cleaning the Work. Demonstration shall include, but not be limited to, following topics:

a. Tour representative areas of Work, inspect and discuss condition of substrate, and other preparatory work performed by other trades.
b. Review Contract Document requirements.
c. Review approved submittals.
d. Review inspection and testing requirements.
e. Review environmental conditions and procedures for coping with unfavorable conditions.
f. Resolve deviations or differences between Contract Documents and the manufacturer's specifications.

3. Record discussions, including decisions and agreements, and prepare report.

1.7 DELIVERY, STORAGE, AND HANDLING

A. General: Comply with requirements of referenced quality standards and manufacturer's written instructions.

1. Package doors individually.
2. Protect doors during transit, storage and handling to prevent damage, soiling and deterioration.
3. Mark each door on top and bottom rail with opening number used on Shop Drawings.

1.8 PROJECT CONDITIONS

A. Environmental Limitations: Deliver and install doors only when spaces are enclosed and weathertight, wet work in spaces is complete and dry, and HVAC system is operating and maintaining ambient temperature and humidity conditions at occupancy levels during remainder of construction period.

1.9 COORDINATION

A. Coordinate installation of products and systems with interfacing and adjoining construction to provide a successful installation without failure.

1.10 WARRANTY

A. Manufacturer's Warranty: Furnish manufacturer's written material and labor warranty signed by an authorized representative using manufacturer's standard form agreeing to furnish materials and labor required to repair or replace work which exhibits material defects caused by manufacture or design and installation of product. Warranty shall also include finishing that may be required due to repair or replacement of defective doors. "Defects" is defined to include but not limited to deterioration or failure to perform as required.

1. Defects include, but are not limited to, the following:

a. Warping (Bow, Cup, or Twist): Not more than 1/4 in (6 mm) in a 42 by 84 in (1050 by 2100 mm) section.
b. Telegraphing of Core Construction: Not more than 0.01 in in a 3 in (0.25 mm in a 75 mm) span in face veneers.

2. Warranty Period: Manufacturer shall warrant the products to be free from material and labor Defects for a period as follows:

a. Warranty Period for Solid-Core Interior Doors: Life of installation.

PART 2 - PRODUCTS

2.1 MANUFACTURERS

A. Acceptable Manufacturers: Subject to compliance with requirements of Contract Documents as judged by the Architect, provide product by one of manufacturers listed. If not listed, submit as substitution according to the Conditions of the Contract and Division 01 Section "Substitution Procedures".

1. Algoma Hardwoods, Inc.
2. Construction Specialties, Inc. (C/S Group)
3. Eggers Industries.
4. Marshfield Door Systems, Inc.
5. Mohawk Flush Doors, Inc.; a Masonite Company.
6. Oshkosh Architectural Door Company.
7. VT Industries Inc.

2.2 MATERIALS, GENERAL

A. Single Source Responsibility: Furnish each type of product from single manufacturer. Provide secondary materials only as recommended by manufacturer of primary materials.

2.3 PERFORMANCE REQUIREMENTS

A. Fire-Test-Response Characteristics:

1. Fire Resistance Ratings: Products and construction identical to assemblies tested for fire resistance according to NFPA 252 or UL 10C and included under Category GSZN, Category A, published in Underwriters Laboratories, Inc. (UL) "Fire Resistance Directory"; or listing of another testing and inspecting agency acceptable to authorities having jurisdiction.
2. Positive Pressure Testing: After 5 minutes into test, neutral pressure level in furnace shall be established at 40 in (1000 mm) or less above sill.
3. Oversize Fire Rated Door Assemblies: For units exceeding sizes of tested assemblies provide certification by a qualified testing agency that doors comply with standard construction requirements for tested and labeled fire-rated door assemblies except for size.
4. Availability: If specified as fire-rated and labeled door can be obtained from one manufacturer, no consideration will be given to those manufacturers who are not authorized to manufacture such doors.
5. Smoke-Control Door Assemblies: Comply with UL 1784.

2.4 DOOR CONSTRUCTION, GENERAL

A. Product Quality Standard: In addition to standard listed elsewhere, comply with following, unless otherwise specified, for construction, finishes, installation, and other requirements.

1. Quality Standard: Comply with "Architectural Woodwork Standards".

a. Provide AWI Quality Certification Program labels and certificates indicating that woodwork, including installation, complies with requirements of grades specified.
b. Contract Documents contain selections chosen from options in quality standard and additional requirements beyond those of quality standard. Comply with those selections and requirements in addition to quality standard.
c. Typical Doors: WDMA I.S.1-A Performance Grade: Heavy Duty, minimum**.**

B. Particleboard Core Doors:

1. Particleboard: ANSI A208.1, Grade LD-2.
2. Blocking: Provide wood blocking as needed to eliminate through-bolting hardware and as follows:

a. Top Rail: 5 in (125 mm).
b. Bottom Rail: 5 in (125 mm).
c. Mid Rail: 5 in (125 mm), in doors indicated to have exit devices.
d. Lock Blocks: 5 in by 10 in (125 mm by 250 mm), one for lock and two for exit devices.

C. Fire-Protection-Rated Doors: Mineral core as required for fire-protection-rating indicated.

1. Edge: Construction with intumescent seals; where positive pressure fire testing is required, edge construction with intumescent seals concealed by outer stile matching door face material and laminated backing at hinge stiles for improved screw-holding capability and split resistance. Comply with specified requirements for exposed edges.
2. Pairs: Fire-retardant stiles that are listed and labeled for applications indicated without formed-steel edges and astragals. Comply with specified requirements for exposed edges.

D. Structural Composite Lumber Core Doors:

1. Structural Composite Lumber: WDMA I.S.10.
2. Screw Withdrawal, Face: 700 lbf (3100 N).
3. Screw Withdrawal, Edge: 400 lbf (1780 N).

E. Mineral Core Doors:

1. Core: Noncombustible mineral product complying with requirements of referenced quality standard and testing and inspecting agency for fire-protection-rating indicated.
2. Blocking: Provide fire resistant composite blocking with improved screw-holding capability approved for use in doors of fire-protection-ratings indicated as needed to eliminate through-bolting hardware and as follows:

a. Top Rail: 5 in (125 mm).
b. Bottom Rail: 5 in (125 mm).

c. Mid Rail: 5 in (125 mm), in doors indicated to have exit devices.
d. Lock Blocks: 5 in by 10 in (125 mm by 250 mm), one for lock and two for exit devices.

2.5 WOOD VENEER FACED DOORS FOR TRANSPARENT FINISH

A. Interior Solid-Core Doors:

1. Grade: Premium, with Grade AA wood veneer faces.
2. Species Cut Selection: As scheduled or as indicated in Design Selections.

    a. Matching of Adjacent Veneer Leaves: Book or Slip match.
    b. Assembly of Veneer Leaves on Door Faces: Balance or Center-Balance match.
    c. Room Match: Match door faces within each separate room or area of building. Corridor door faces do not need to match where they are separated by not less than 20 ft (6 m) or more.
    d. Pair and Set Match: For doors hung in same opening or separated only by mullions.
    e. Transom Match: Continuous match.
    f. Blueprint Match: Where indicated, provide doors with faces produced from same wood veneer flitches as adjacent wood paneling and arranged to provide blueprint match with wood paneling. Comply with requirements in Division 06 Section "Interior Architectural Woodwork".

3. Exposed Vertical Edges: Same wood veneer as face veneer with sanded eased edges.
4. Horizontal Edges: Unfaced, sanded smooth, with factory applied seal coat.
5. Core: Particleboard or mineral core as required by application.
6. Construction: 5 plies.

    a. Stiles and rails bonded to core.
    b. Entire unit abrasive planed before veneering.
    c. Faces bonded to core using a hot press.

2.6 DOORS FOR OPAQUE FINISH

A. Interior Solid-Core Doors:

1. Grade: Premium.
2. Faces: Apply medium-density overlay to standard-thickness, closed-grain, hardwood face veneers.
3. Color Selection: As scheduled or as indicated in Design Selections.
4. Exposed Vertical and Horizontal Edges: Any closed-grain hardwood with sanded eased edges.
5. Core: Particleboard.
6. Construction: 5 plies.

    a. Stiles and rails bonded to core.
    b. Entire unit abrasive planed before veneering.
    c. Faces bonded to core using a hot press.

2.7 LIGHT FRAMES

A. Wood Beads for Light Openings in Wood Doors:

1. Description: Manufacturer's standard wood beads and profile. At wood-core doors with 20-minute fire protection ratings, provide wood beads and metal glazing clips approved for such use.
2. Material and Finish: Same veneer species and finish as door faces.
3. Glass: As specified in Division 08 Section "Glazing".

B. Wood Veneered Beads for Light Openings in Fire-Rated Doors:

1. Description: Manufacturer's standard wood veneered, noncombustible beads approved for use in doors of fire protection rating indicated. Include concealed metal glazing clips where required for opening size and fire protection rating indicated.
2. Material and Finish: Same veneer species and finish as door faces.
3. Glass: As specified in Division 08 Section "Glazing".

C. Metal Frames for Light Openings in Fire-Rated Doors:

1. Description: Manufacturer's standard frame formed of 0.048 in (1.2 mm) thick, cold-rolled steel sheet; and approved for use in doors of fire protection rating indicated.

a. Color Selection: As scheduled or as indicated in Design Selections.

2. Glass: As specified in Division 08 Section "Glazing".

2.8 DOOR LOUVERS

A. Wood Louvers:

1. Description: Manufacturer's standard solid-wood louvers.
2. Material and Finish: Same veneer species and finish as door faces.

B. Metal Louvers:

1. Description: Vision-proof, inverted V louver blades set in continuous metal frame that covers edge of door cutout.
2. Metal: Extruded aluminum.

a. Finish: Class II, clear anodic finish, AA-M12C22A31.

3. Metal: Hot-dip galvanized steel, 0.040 in (1.0 mm) thick,

1) Color Selection: As scheduled or as indicated in Design Selections.

C. Metal Louvers for Fire-Rated Doors:

1. Description: Louver with fusible link and closing device listed and labeled for use in doors with fire protection rating of 1-1/2 hours and less; set in continuous metal frame that covers edge of door cutout.
2. Metal: Hot-dip galvanized steel, 0.040 in (1.0 mm) thick,

1) Color Selection: As scheduled or as indicated in Design Selections.

D. Manufacturers:

1. Air Louvers Inc.

2. Anemostat; a Mestek Company.
3. Hiawatha Incorporated.
4. L & L Louvers, Inc.
5. LL Building Products, Inc.; a Division of GAF Materials Corporation.
6. Louvers & Dampers, Inc.; a Mestek Company.
7. McGill Architectural Products.

2.9 FABRICATION OF PREFINISHED FLUSH WOOD DOORS

A. Fabrication Quality Standards: In addition to standards listed elsewhere, comply with following, unless otherwise specified:

1. NFPA 80 for fire-rated doors.
2. DHI-WDHS-3 and DHI A115-W series standards for hardware.

B. Factory Fitting: Factory fit doors to suit frame opening sizes indicated according to installation quality standards. Do not trim stiles and rails in excess of limits permitted for fire-rated doors. Machine doors for hardware. Seal edges of doors, edges of cutouts, and mortises after fitting and machining with seal coat.

C. Hardware:

1. Factory machine doors for hardware that is not surface applied according to installation quality standards.
2. Coordinate with hardware mortises in metal frames to verify dimensions and alignment before factory machining.
3. For doors scheduled to have electrical locks, provide built-in 1/4 in (6 mm) diameter raceway through doors, from lockset location to nearest hinge location, for low voltage wiring for doors scheduled to have electric locks.

D. Transom Panels: Fabricate matching panels of same construction, exposed surfaces, and finish as specified for associated doors. Finish bottom edges of transoms and top edges of rabbeted doors same as door stiles.

E. Openings: Cut and trim openings through doors in factory.

1. Light Openings: Trim openings with moldings of material and profile indicated.
2. Glazing: Factory install glazing in doors indicated to be factory finished. Comply with applicable requirements in Division 08 Section "Glazing".
3. Louvers: Factory-install louvers in prepared openings.

2.10 FACTORY FINISHING OF DOORS

A. General:

1. Comply with referenced quality standard for factory finishing.
2. Complete fabrication, including fitting doors for openings and machining for hardware that is not surface applied, before finishing.
3. Finish faces, all four edges, edges of cutouts, and mortises. Stains and fillers may be omitted on edges of cutouts and mortises.

B. Grade: Provide finishes of same grades as items to be finished.

C. Wood Veneer Faced Doors for Transparent Finish: As scheduled or as indicated in Design Selections.

D. Doors for Opaque Finish: As scheduled or as indicated in Design Selections.

PART 3 - EXECUTION

3.1 EXAMINATION

A. Acceptance of Surfaces and Conditions: Examine substrates to receive products and systems and associated work for compliance with requirements and other conditions affecting performance. Proceed only when unsatisfactory conditions have been corrected in a manner complying with Contract Documents. Starting work within a particular area will be construed as acceptance of surface conditions.

1. Verify that frames comply with indicated requirements for type, size, location, and swing characteristics and have been installed with level heads and plumb jambs.
2. Reject doors with defects.

3.2 INSTALLATION, GENERAL

A. Installation Quality Standards: In addition to standards listed elsewhere, perform Work according to following, unless otherwise specified:

1. NFPA 80 for fire-rated doors.
2. NFPA 105 for smoke control doors.
3. Respective manufacturer's written installation instructions.
4. Accepted submittals.
5. Contract Documents.

3.3 PREPARATION

A. General: Comply with manufacturer's instructions, recommendations, and specifications for cleaning and surface preparation. Surfaces shall have no defects, contaminants, or errors which would result in poor or potentially defective installation or would cause latent defects in Work.

3.4 INSTALLATION OF FLUSH WOOD DOORS

A. Factory-Fitted Door Clearances: Fit accurately in frames, within following clearances for all doors (smoke control, fire-rated, and non-fire-rated):

1. Jambs and Head: 1/8 in (3 mm) maximum.
2. Between Edges of Pairs of Doors: 1/8 in (3 mm) maximum.
3. Between Bottom of Door and Top of Threshold: Maximum 3/8 in (10 mm).
4. Between Bottom of Door and Top of Finish Floor (No Threshold): Maximum 3/4 in (19 mm).
5. Between Bottom of Door and Top of Finish Surface (No Threshold) when the bottom of the door is more than 38 in (965 mm) above the finished floor: Maximum 3/8 in (10 mm) or as specified by the manufacturer's label service procedure.

B. Hardware: As specified in Division 08 Section "Door Hardware".

C. Factory-Finished Doors: Restore finish before installation if fitting or machining is required at Project site.

3.5 ADJUSTING

A. Operation: Rehang or replace doors that do not swing or operate freely.

B. Finished Doors: Replace doors that are damaged or that do not comply with requirements. Doors may be repaired or refinished if Work complies with requirements and shows no evidence of repair or refinishing.

3.6 FINISH SCHEDULE

A. Wood Veneer Faced Doors for Transparent Finish:

1. Species and Cut Selection: Match sample accepted by Architect. Existing

END OF SECTION

SECTION 08 3113

ACCESS DOORS AND FRAMES

PART 1 - GENERAL

1.1 SUMMARY

A. Section Includes: Access doors and frames and supplementary items necessary for installation.

1.2 ACTION SUBMITTALS

A. Product Data: Manufacturer's technical literature for each product and system indicated.

1. Include manufacturer's specifications for materials, finishes, construction details, installation instructions, and recommendations for maintenance.

B. Shop Drawings: Show details of fabrication and installation, including plans, elevations, sections, details of components and attachments to other work. Distinguish between shop and field-assembled work.

C. Ceiling Coordination Drawings for Access Doors at Ceilings: Furnish reflected ceiling plans, drawn to scale, on which ceiling-mounted items including access doors and frames, lighting fixtures, diffusers, grilles, speakers, sprinklers, and special trim are shown and coordinated with each other. Indicate method of attaching door frames to surrounding construction.

D. Samples for Verification Purposes: For each door face material, at least 3 in by 5 in (75 mm by 125 mm) in size, in specified finish.

E. Access Door and Frame Schedule: Provide complete access door and frame schedule, including types, locations, sizes, latching or locking provisions, and other data pertinent to installation.

1.3 INFORMATIONAL SUBMITTALS

A. Product Test Reports: Written reports based on evaluation of comprehensive tests performed by qualified testing agency indicating that each product complies with requirements.

1.4 CLOSEOUT SUBMITTALS

A. Maintenance Data: To include in maintenance manuals.

1.5 QUALITY ASSURANCE

A. Fire-Rated Access Doors and Frames: Units complying with NFPA 80 that are identical to access door and frame assemblies tested for fire-test-response characteristics per the following test method and that are listed and labeled by UL or another testing and inspecting agency acceptable to authorities having jurisdiction:

1. NFPA 252 or UL 10B for vertical access doors and frames.
2. ASTM E 119 or UL 263 for horizontal access doors and frames.

B. Size Variations: Obtain Architect's acceptance of manufacturer's standard-size units, which may vary slightly from sizes indicated.

1.6 COORDINATION

A. Coordinate installation of products and systems with interfacing and adjoining construction to provide a successful installation without failure.

B. Verification: Determine specific locations and sizes for access doors needed to gain access to concealed plumbing, mechanical, or other concealed work, and indicate in the schedule specified in "Submittals" Article.

PART 2 - PRODUCTS

2.1 MANUFACTURERS

A. Acceptable Manufacturers: Subject to compliance with requirements of Contract Documents as judged by the Architect, provide product by one of manufacturers listed. If not listed, submit as substitution according to the Conditions of the Contract and Division 01 Section ‘‘Substitution Procedures’’.

1. Metal Doors and Frames:

   a. Acudor Products, Inc.
   b. Babcock-Davis.
   c. Dur-Red Products.
   d. J. L. Industries, Inc.
   e. Karp Associates, Inc.
   f. Larsen's Manufacturing Company.
   g. Maxam Metal Products, Ltd.
   h. Milcor Inc.
   i. Nystrom, Inc.
   j. Williams Brothers Corporation of America.

2. Glass-Fiber-Reinforced Gypsum (GFRG) Doors and Frames:

   a. Chicago Metallic Corporation.

B. Basis of Design (Product Standard): Contract Documents are based on products and systems specified to establish a standard of quality. Other manufacturers offering products having equivalent characteristics may be considered, provided deviations are minor and comply with requirements of Contract Documents as judged by the Architect.

2.2 MATERIALS, GENERAL

A. Single Source Responsibility: Furnish each type of product from single manufacturer. Provide secondary materials only as recommended by manufacturer of primary materials.

2.3 STEEL MATERIALS

A. Steel Plates, Shapes, and Bars: ASTM A 36 / A 36M.

1. ASTM A 123 / A 123M, for galvanizing steel and iron products.
2. ASTM A 153 / A 153M, for galvanizing steel and iron hardware.

B. Steel Sheet: Uncoated cold-rolled steel sheet substrate complying with ASTM A 1008 / A 1008M, Commercial Steel (CS), exposed.

C. Steel Finishes: Comply with NAAMM's "Metal Finishes Manual for Architectural and Metal Products" for recommendations for applying and designating finishes.

1. Surface Preparation for Steel Sheet: Clean surfaces to comply with SSPC-SP 1, "Solvent Cleaning", to remove dirt, oil, grease, or other contaminants that could impair paint bond. Remove mill scale and rust, if present, from uncoated steel, complying with SSPC-SP 5/NACE No. 1, "White Metal Blast Cleaning", or SSPC-SP 8, "Pickling".

2. Factory-Primed Finish: Apply shop primer immediately after cleaning and pretreating.

D. Drywall Beads: Edge trim formed from 0.0299 in (0.7 mm) zinc-coated steel sheet formed to receive joint compound and in size to suit thickness of gypsum board.

E. Plaster Beads: Casing bead formed from 0.0299 in (0.7 mm) zinc-coated steel sheet with flange formed out of expanded metal lath and in size to suit thickness of plaster.

2.4 STAINLESS-STEEL MATERIALS

A. Stainless-Steel Sheet, Strip, Plate, and Flat Bars: ASTM A 666, Type 316. Remove tool and die marks and stretch lines or blend into finish.

1. Finish: Directional No. 4 Satin Finish.

2.5 ACCESS DOORS AND FRAMES FOR WALLS AND CEILINGS

A. Non-rated Flush Access Doors and Frames with Exposed Trim:

1. Locations:

a. Masonry wall surfaces.
b. Ceramic tile wall surfaces.

2. Fabricated from one of the following as scheduled at the end of this Section.

a. Steel sheet.
b. Metallic-coated (galvanized) steel sheet.

3. Door: Minimum 0.075 in (1.9 mm) thick sheet metal, set flush with exposed face flange of frame.
4. Frame: Minimum 0.060 in (1.5 mm) thick sheet metal with 1-1/4 in (32 mm) wide, surface-mounted trim.
5. Hinges: Continuous piano.
6. Lock: Key-operated cylinder.
7. Size: 12 in by 12 in (300 mm by 300 mm); unless otherwise indicated.
8. Basis of Design: Nystrom Building Products, Model NT.

B. Non-rated Flush Access Doors and Trimless Frames:

1. Locations: Wall and ceiling surfaces as scheduled.

a. Gypsum board wall and ceiling surfaces.
b. Plaster wall and ceiling surfaces.

2. Fabricated from one of the following as scheduled at the end of this Section.

a. Steel sheet.
b. Stainless-steel sheet.

3. Door: Minimum 0.075 in (1.9 mm) thick sheet metal, set flush with surrounding finish surfaces.
4. Frame: Minimum 0.060 in (1.5 mm) thick sheet metal with drywall bead flange.
5. Hinges: Continuous piano.
6. Lock: Key-operated cylinder.
7. Size: 12 in by 12 in (300 mm by 300 mm); unless otherwise indicated.
8. Basis of Design: Nystrom Building Products, Model NW or NP as applicable.

C. Fire-Rated, Insulated, Flush Access Doors and Frames with Exposed Trim:

1. Locations:

a. Masonry wall surfaces.
b. Ceramic tile wall surfaces.

2. Fabricated from one of the following as scheduled at the end of this Section.

a. Steel sheet.
b. Stainless-steel sheet.

3. Fire-Resistance Rating: Not less than 1-1/2 hours.
4. Temperature Rise Rating: 250 deg F (139 deg C) at the end of 30 minutes.
5. Door: Flush panel with a core of mineral-fiber insulation enclosed in sheet metal with a minimum thickness of 0.036 in (0.9 mm).
6. Frame: Minimum 0.060 in (1.5 mm) thick sheet metal with 1 in (25 mm) wide, surface-mounted trim.
7. Hinges: Continuous piano.
8. Automatic Closer: Spring type.

9. Latch: Self-latching device operated by flush key with interior release.
10. Size: 12 in by 12 in (300 mm by 300 mm); unless otherwise indicated.
11. Basis of Design: Nystrom Building Products, Model IT.

D. Fire-Rated, Insulated, Flush Access Doors and Trimless Frames:

1. Locations:

a. Gypsum board wall and ceiling surfaces.
b. Plaster wall and ceiling surfaces.

2. Fabricated from one of the following as scheduled at the end of this Section.

a. Steel sheet.
b. Stainless-steel sheet.

3. Fire-Resistance Rating: Not less than 1-1/2 hours.
4. Temperature Rise Rating: 250 deg F (139 deg C) at the end of 30 minutes.
5. Door: Flush panel with a core of mineral-fiber insulation enclosed in sheet metal with a minimum thickness of 0.036 in (0.9 mm).
6. Frame: Minimum 0.060 in (1.5 mm) thick sheet metal with drywall bead.
7. Hinges: Continuous piano.
8. Automatic Closer: Spring type.
9. Latch: Self-latching device operated by flush key with interior release.
10. Size: 12 in by 12 in (300 mm by 300 mm); unless otherwise indicated.
11. Basis of Design:

a. Gypsum Board: Nystrom Building Products, Model IW.
b. Plaster: Nystrom Building Products, Model IP.

2.6 FABRICATION

A. General: Provide access door and frame assemblies manufactured as integral units ready for installation.

B. Metal Surfaces: For metal surfaces exposed to view in the completed Work, provide materials with smooth, flat surfaces without blemishes. Do not use materials with exposed pitting, seam marks, roller marks, rolled trade names, or roughness.

C. Doors and Frames: Grind exposed welds smooth and flush with adjacent surfaces. Furnish attachment devices and fasteners of type required to secure access panels to types of supports indicated.

1. Gypsum Board Locations: For trimless frames with drywall bead, provide edge trim for gypsum board securely attached to perimeter of frames.
2. Provide mounting holes in frames for attachment of units to metal framing.
3. Provide mounting holes in frame for attachment of masonry anchors.

D. Latching Mechanisms: Furnish number required to hold doors in flush, smooth plane when closed.

1. For cylinder lock, furnish two keys per lock and key all locks alike.

PART 3 - EXECUTION

3.1 EXAMINATION

A. Acceptance of Surfaces and Conditions: Examine substrates to receive products and systems and associated work for compliance with requirements and other conditions affecting performance. Proceed only when unsatisfactory conditions have been corrected in a manner complying with Contract Documents. Starting work within a particular area will be construed as acceptance of surface conditions.

3.2 INSTALLATION, GENERAL

A. Installation Quality Standards: In addition to standards listed elsewhere, perform Work according to following, unless otherwise specified:

1. Respective manufacturer's written installation instructions.
2. Accepted submittals.
3. Contract Documents.

3.3 PREPARATION

A. General: Comply with manufacturer's instructions, recommendations, and specifications for cleaning and surface preparation. Surfaces shall have no defects or errors which would result in poor or potentially defective installation or would cause latent defects in Work.

B. Advise installers of other work about specific requirements relating to access door and floor door installation, including sizes of openings to receive access door and frame, as well as locations of supports, inserts, and anchoring devices.

3.4 INSTALLATION OF ACCESS DOORS AND FRAMES

A. Frames with Masonry Anchors: Set frames accurately in position and attach securely to supports with plane of face panels aligned with adjacent finish surfaces.

B. Install doors flush with adjacent finish surfaces or recessed to receive finish material.

3.5 ADJUSTING AND CLEANING

A. Adjust doors and hardware after installation for proper operation.

B. Remove and replace doors and frames that are warped, bowed, or otherwise damaged.

3.6 ACCESS DOOR SCHEDULE

A. Provide access doors where indicated on the drawings and as follows:

1. Steel Access Doors:

    a. Concealed valves and controls for plumbing and HVAC.
    b. Fire dampers above non-accessible ceilings.
    c. Motor operated doors and grilles above non-accessible ceilings.

2. Fire-Rated Steel Access Doors:

a. Rated walls and ceilings.

3. Stainless Steel Access Doors:

a. Ceramic tile and other damp locations.

END OF SECTION

SECTION 08 34 00

SPECIAL FUNCTION DOORS

PART 1 - GENERAL

1.01 RELATED DOCUMENTS

A. Drawings and general provisions of the Contract, including General and Supplementary Conditions and Division 01 Specification Sections, apply to this Section.

1.02 SUMMARY

A. Section includes:

1. Interior Aluminum-Framed Top-Hung Sliding Doors

B. Related Sections:

1. Section 08 14 16 – Flush Wood Door

1.03 REFERENCES

A. ANSI – American National Standards Institute

1. ANSI 156.18 Materials and Finishes
2. ANSI A117.1 Specifications for making buildings and facilities usable by physically handicapped people.

B. BHMA – Builders Hardware Manufacturers Association

C. DHI – Door and Hardware Institute

D. NFPA – National Fire Protection Association

1. NFPA 80 – Fire Doors and Windows
2. NFPA 101 – Life Safety code
3. NFPA 105 – Smoke and Draft Control Door Assemblies
4. NFPA 252 – Fire Tests of Doors Assemblies

E. AWS – Architectural Woodwork Standards

1.04 SUBMITTALS

A. Comply with Section 01 33 00 – Submittal Procedures

B. Product Data: Submit manufacturer's product data, including installation instructions.

C. Shop Drawings: Submit manufacturer's shop drawings, including plans, elevations, sections, and details, indicating dimensions, tolerances, materials, components, hardware, finish, options, and accessories. Shop Drawings to show required blocking by others.

D. Samples: Submit manufacturer's samples of the following sliding door components:

1. Door veneer or laminate sample.
2. Aluminum Frame finish sample.

E. Manufacturer's Certification: Submit manufacturer's certification that materials comply with specified requirements and are suitable for intended application.

F. Warranty Documentation: Submit manufacturer's standard warranty.

G. Test Reports: Submit acoustical reports or UL1784 as applicable.

1.05 QUALITY ASSURANCE

A. Product Options: Drawings indicate size, profiles, and dimensional requirements of interior aluminum frames and doors.

B. Source: Obtain sliding aluminum framed doors and hardware from single source.

C. Manufacturer's Qualifications: Manufacturer regularly engaged for past 5 years in manufacture of sliding doors similar to that specified.

1.06 PERFORMANCE

A. Aluminum perimeter frames with integral acoustic seals.

B. Soft self-closing mechanism integrated with top track.

C. Concealed door guide.

1.07 DELIVERY, STORAGE, AND HANDLING

A. Delivery and Acceptance Requirements: Deliver materials to site in manufacturer's original, unopened containers and packaging, with labels clearly identifying product name and manufacturer.

B. Notify manufacturer immediately of any shipping damage.

C. Storage and Handling Requirements:

1. Store and handle materials in accordance with manufacturer's instructions.
2. Keep materials in manufacturer's original, unopened containers and packaging until installation.
3. Store materials in clean, dry area indoors.
4. Protect materials and finish during storage, handling, and installation to prevent damage.

PART 2 - PRODUCTS

2.01 MANUFACTURERS

A. Acceptable Manufacturers: Subject to compliance with requirements of Contract Documents as judged by the Architect, provide product by one of manufacturers listed. If not listed, submit as substitution according to the Conditions of the Contract and Division 01 Section "Substitution Procedures".

1) AD System
2) Algoma Hardwoods, Inc.
3) Construction Specialties, Inc. (C/S Group)
4) Eggers Industries.
5) Marshfield Door Systems, Inc.
6) Mohawk Flush Doors, Inc.; a Masonite Company.
7) Oshkosh Architectural Door Company.
8) VT Industries Inc.

2.02 INTERIOR SLIDING ALUMINUM-FRAMED DOORS AND PARTITIONS

A. Manufacturer:

1. Scheduled Manufacturer: ExamSlide™ High Performance Barn (Sliding) Door System by AD Systems.
2. Acceptable Substitute: No Substitution.

B. Specified Wall Thickness: Refer to Drawings.

C. Frame Profiles: Extruded aluminum frame "wrap" frame with integral vertical jamb (stile pocket).

D. Finish:

1. Standard: Painted Hardcoat (Kynar) Finish. Meets AAMA 2604 Standard
2. Colors: Select from Manufacturer standard colors approved by the Architect.

E. Door Leafs. All Doors to be factory machined for hardware including pilot and function holes.

1. 1-3/4" Flush Wood Door: Reference Spec Section 08200 Wood Doors or other section as applicable.

    a. Standard stile widths are 6” with a 10” bottom rail.

2. Aluminum Stile & Rail Door: 3-1/2” stiles plus 1/2” stop.

    a. 10” bottom Rail.

3. Other 1-3/4” Doors.

F. Door Components:

1. Single Top Track: AD Systems extruded aluminum track by AD Systems
2. Valances: Extruded aluminum with integral end caps

    a. Standard square valance.

3. Top Rollers: tandem nylon roller sized to match door weight
4. Concealed Floor Guide: Integral Jamb floor guide by AD Systems
5. Soft-Closer: Soft and self-closing damper mechanism at [one] or [both] sides of door leaf
6. Handles:

G. Accessories:

H. Specifier Notes: Specify required accessories. Delete accessories not required, all accessories listed below are optional.

I. Door Locks:

1. Not Required

J. Automatic Door Bottom for improved acoustical performance

K. Additional hardware functionality can be accommodated. Please contact AD Systems with your hardware requirements and we evaluate system compatibility and create specification language.

PART 3 - EXECUTION

3.01 EXAMINATION

A. Examine wall openings to receive sliding doors for plumb, level, and square. Note: Finish door operation will be affected by out of tolerance framing.

B. Verify dimensions of wall openings.

C. Examine surfaces to receive top and bottom guide.

D. Notify Architect of conditions that would adversely affect installation or subsequent use of sliding doors.

E. Do not begin installation until unacceptable conditions are corrected.

F. Base of door side to be flush or minimal. Rubber Base acceptable.

3.02 INSTALLATION

A. Install sliding doors in accordance with manufacturer's instructions at locations indicated on the Drawings.

B. Install sliding doors plumb, level, square, and in proper alignment.

C. Install sliding doors to close against walls without gaps

D. Install sliding doors to open and close smoothly.

E. Anchor sliding doors securely in place to supports. Required: Fire treated 2 x 6 blocking required full length of track.

3.03 ADJUSTING

A. Adjust sliding doors for proper operation in accordance with manufacturer's instructions.

B. Adjust sliding doors to operate smoothly without binding.

C. Repair minor damages to finish in accordance with manufacturer's instructions and as approved by Architect.

3.04 CLEANING

A. Clean sliding doors promptly after installation in accordance with manufacturer's instructions.

B. Do not use harsh cleaning materials or methods that could damage materials or finish.

3.05 PROTECTION

A. Protect installed sliding doors from damage during construction.

END OF SECTION

SECTION 08 3616
BARN (SLIDING) ALL GLASS DOOR

PART 1 - GENERAL

1.1 SUMMARY

A. Sliding Barn Doors – glass panel, aluminum frames and related hardware.

1.2 RELATED SECTION

A. Section 08 1416 – Flush Wood Door

1.3 SUBMITTALS

A. Comply with Section 01 33 00 – Submittal Procedures

B. Product Data: Submit manufacturer's product data, including installation instructions.

C. Shop Drawings: Submit manufacturer's shop drawings, including plans, elevations, sections, and details, indicating dimensions, tolerances, materials, components, hardware, finish, options, and accessories. Shop Drawings to show required blocking by others.

D. Samples: Submit manufacturer's samples of the following sliding door components:

1. Door veneer or laminate sample
2. Aluminum Frame finish sample

E. Manufacturer's Certification: Submit manufacturer's certification that materials comply with specified requirements and are suitable for intended application.

F. Warranty Documentation: Submit manufacturer's standard warranty.

G. Test Reports: Submit acoustical reports or UL1784 as applicable.

1.4 QUALITY ASSURANCE

A. Product Options: Drawings indicate size, profiles, and dimensional requirements of interior aluminum frames and doors.

B. Source: Obtain sliding aluminum framed doors and hardware from single source.

C. Manufacturer's Qualifications: Manufacturer regularly engaged for past 5 years in manufacture of sliding doors similar to that specified.

1.5 REFERENCES

A. ANSI – American National Standards Institute

1. ANSI 156.18 Materials and Finishes
2. ANSI A117.1 Specifications for making buildings and facilities usable by physically handicapped people.

B. BHMA – Builders Hardware Manufacturers Association

C. DHI – Door and Hardware Institute

D. NFPA – National Fire Protection Association

1. NFPA 80 – Fire Doors and Windows
2. NFPA 101 – Life Safety code
3. NFPA 105 – Smoke and Draft Control Door Assemblies
4. NFPA 252 – Fire Tests of Doors Assemblies

E. AWS – Architectural Woodwork Standards

1.6 PERFORMANCE

A. Aluminum perimeter frames with integral acoustic seals

B. Soft self-closing mechanism integrated with top track

C. Concealed door guide

1.7 DELIVERY: STORAGE AND PROTECTION

A. Delivery and Acceptance Requirements: Deliver materials to site in manufacturer's original, unopened containers and packaging, with labels clearly identifying product name and manufacturer.

B. Notify manufacturer immediately of any shipping damage.

C. Storage and Handling Requirements:

1. Store and handle materials in accordance with manufacturer's instructions.
2. Keep materials in manufacturer's original, unopened containers and packaging until installation.
3. Store materials in clean, dry area indoors.
4. Protect materials and finish during storage, handling, and installation to prevent damage.

PART 2 - PRODUCTS

2.1 MANUFACTURER

A. **AD SYSTEMS** 2201 100th St. SW, Everett, WA 98204 | Website: http://specADsystems.com | Phone: 425-374-1360 | Attn: Estimating: estimating@specADsystems.com

2.2 INTERIOR SLIDING ALUMINUM-FRAMED DOORS AND PARTITIONS

A. Interior Aluminum-Framed Top-Hung Sliding Doors: Model: AD Systems High Performance Sliding Door System by AD Systems.

B. Specified Wall Thickness: [Insert Wall Thickness]

C. Frame Profiles: Extruded aluminum frame “wrap” frame with integral vertical jamb (stile pocket).

1. Finish:

a. Standard: Painted Hardcoat (Kynar) Finish. Meets AAMA 2604 Standard Colors: Medium Bronze 789G046

D. Door Leafs. All Doors to be factory machined for hardware including pilot and function holes.

1. Glass Panel doors to be constructed with 3/8” Tempered glass with AD Systems top and bottom rail system in clear anodized finish.

E. Door Components:

1. Single Top Track: AD Systems extruded aluminum track by AD Systems
2. Top Rollers: tandem nylon roller sized to match door weight
3. Handles:

a. AD Systems Standard Straight Pull: 12” long x 1” diameter. Finish: US32D Satin Stainless Steel

F. Accessories:

1. Door Locks:

a. CRL AMR Series Patch Lock.

2.3 EXAMINATION

A. Examine wall openings to receive sliding doors for plumb, level, and square. Note: Finish door operation will be affected by out of tolerance framing.

B. Verify dimensions of wall openings.

C. Examine surfaces to receive top and bottom guide.

D. Notify Architect of conditions that would adversely affect installation or subsequent use of sliding doors.

E. Do not begin installation until unacceptable conditions are corrected.

F. Base of door side to be flush or minimal. Rubber Base acceptable.

2.4 INSTALLATION

A. Install sliding doors in accordance with manufacturer's instructions at locations indicated on the Drawings.

B. Install sliding doors plumb, level, square, and in proper alignment.

C. Install sliding doors to close against walls without gaps

D. Install sliding doors to open and close smoothly.

E. Anchor sliding doors securely in place to supports. Required: Fire treated 2 x 6 blocking required full length of track.

2.5 ADJUSTING

A. Adjust sliding doors for proper operation in accordance with manufacturer's instructions.

B. Adjust sliding doors to operate smoothly without binding.

C. Repair minor damages to finish in accordance with manufacturer's instructions and as approved by Architect.

2.6 CLEANING

A. Clean sliding doors promptly after installation in accordance with manufacturer's instructions.

B. Do not use harsh cleaning materials or methods that could damage materials or finish.

2.7 PROTECTION

A. Protect installed sliding doors from damage during construction.

END OF SECTION

SECTION 08 4110

INTERIOR STOREFRONT

PART 1 - GENERAL

1.1 SUMMARY

A. Section Includes: Interior storefront (interior glazed aluminum partitions) and supplementary items necessary for installation.

B. Related Section:

1. Division 08 Section "Interior Aluminum Frames" for aluminum frames used for doors and glazing installed in gypsum board partitions.

1.2 ACTION SUBMITTALS

A. Product Data: Manufacturer's technical literature for each product and system indicated.

1. Include manufacturer's specifications for materials, finishes, construction details, installation instructions, and recommendations for maintenance.

B. Shop Drawings: Show details of fabrication and installation, including plans, elevations, sections, details of components and attachments to other work. Distinguish between shop and field-assembled work.

C. Samples for Initial Selection: For units with factory-applied color finishes.

D. Samples for Verification: For each type of exposed finish required, in manufacturer's standard sizes.

1.3 INFORMATIONAL SUBMITTALS

A. Welding Certifications: Qualification certificates required by "Quality Assurance" Article. Include names of firms and personnel certified.

B. Qualification Data:

1. For firms and persons specified in "Quality Assurance" to demonstrate their capabilities and experience. Include list of completed projects.

1.4 QUALITY ASSURANCE

A. Manufacturer Qualifications: Manufacturer with not less than 10 years of experience in the successful production and in-service performance of products and systems similar to scope of this Project.

B. Welding Qualifications: Qualify procedures and personnel according to AWS qualification requirements and the following:

1. AWS D1.2/D1.2M, "Structural Welding Code - Aluminum".

1.5 PROJECT CONDITIONS

A. Field Measurements: Where products and systems are indicated to fit walls and other construction, verify dimensions by field measurements before fabrication.

1.6 COORDINATION

A. Coordinate installation of products and systems with interfacing and adjoining construction to provide a successful installation without failure.

PART 2 - PRODUCTS

2.1 MANUFACTURERS AND PRODUCTS

A. Acceptable Manufacturers: Subject to compliance with requirements of Contract Documents as judged by the Architect, provide product by one of manufacturers listed. If not listed, submit as substitution according to the Conditions of the Contract and Division 01 Section "Substitution Procedures".

1. EFCO Corporation, a Pella Company.
2. Kawneer North America; an Alcoa Company.
3. Oldcastle BuildingEnvelope.
4. YKK AP America Inc.

B. Basis of Design (Product Standard): Contract Documents are based on products and systems specified to establish a standard of quality. Other manufacturers offering products having equivalent characteristics may be considered, provided deviations are minor and comply with requirements of Contract Documents as judged by the Architect.

1. Kawneer North America; an Alcoa Company; Trifab VG 450, 1-3/4 in (44 mm) face, 4-1/2 in (113 mm) depth, glass in center.

2.2 MATERIALS, GENERAL

A. Single Source Responsibility: Furnish each type of product from single manufacturer. Provide secondary materials only as recommended by manufacturer of primary materials

2.3 PERFORMANCE REQUIREMENTS

A. Structural Loads: Provide glazed aluminum partition systems capable of withstanding uniform load of 5 lbs per sq. ft. (25 kg/square m) based on testing manufacturer's standard system in assemblies similar to those indicated for this Project.

1. Deflection of framing members normal to wall plane is limited to 1/175 of clear span for spans up to 13 ft 6 in (4 m) and to 1/240 of clear span plus 1/4 in (6 mm) for spans greater than 13 ft 6 in (4 m) or an amount that restricts edge deflection of individual glazing lites to 3/4 in (19 mm) whichever is less.

2.4 MATERIALS

A. Aluminum: Alloy and temper recommended by manufacturer for type of use and finish indicated.

1. Sheet and Plate: ASTM B 209 / B 209M.
2. Extruded Bars, Rods, Profiles, and Tubes: ASTM B 221 / B 221M.
3. Extruded Structural Pipe and Tubes: ASTM B 429 / B 429M.
4. Structural Profiles: ASTM B 308 / B 308M.
5. Welding Rods and Bare Electrodes: AWS A5.10/A5.10M.

B. Internal Steel Reinforcement for High Spans: Manufacturer's standard zinc-rich, corrosion-resistant primer, complying with SSPC-PS Guide No. 12.00; applied immediately after surface preparation and pretreatment. Select surface preparation methods according to recommendations in SSPC-SP COM and prepare surfaces according to applicable SSPC standard.

1. Structural Shapes, Plates, and Bars: ASTM A 36/A 36M.
2. Cold-Rolled Sheet and Strip: ASTM A 1008/A 1008M.
3. Hot-Rolled Sheet and Strip: ASTM A 1011/A 1011M.

C. Framing Members: Manufacturer's standard extruded-aluminum framing members of thickness required and reinforced as required to support imposed loads.

D. Brackets and Reinforcements: Manufacturer's standard high-strength aluminum with nonstaining, nonferrous shims for aligning system components.

E. Fasteners and Accessories: Manufacturer's standard corrosion-resistant, nonstaining, nonbleeding fasteners and accessories compatible with adjacent materials.

2.5 GLAZING

A. Glazing: Provide glass of types and thicknesses indicated. Fabricate glass to sizes required for openings indicated with edge clearances and tolerances complying with manufacturer's recommendations. Comply with Division 08 Section "Glazing".

2.6 FABRICATION

A. Weld in concealed locations to greatest extent possible to minimize distortion or discoloration of finish. Remove weld spatter and welding oxides from exposed surfaces by descaling or grinding.

B. Framing Members: Fabricate components that, when assembled, have the following characteristics:

1. Profiles that are sharp, straight, and free of defects or deformations.
2. Accurately fitted joints with ends coped or mitered.
3. Physical and thermal isolation of glazing from framing members.
4. Accommodations for thermal and mechanical movements of glazing and framing to maintain required glazing edge clearances.
5. Fasteners, anchors, and connection devices that are concealed from view to greatest extent possible.
6. Fabricate for flush glazing (without projecting stops).

C. Door Frames: Reinforce as required to support loads imposed by door operation and for installing hardware.

1. Provide silencers at stops to prevent metal-to-metal contact. Install three silencers on strike jamb of single-door frames and two silencers on head of frames for pairs of doors.

D. After fabrication, clearly mark components to identify their locations in Project according to Shop Drawings.

2.7 ALUMINUM FINISHES

A. Finish designations prefixed by "AA" conform to the system established by the Aluminum Association for designating aluminum finishes.

1. Color Selections: As scheduled or as indicated in Design Selections.

B. Baked Enamel or Powder Coated Finish at Interior Surfaces: At Contractor's option, provide baked enamel or powder coated finish at interior surfaces complying with AAMA 2604 except with a minimum dry film thickness of 1.2 mils (0.03 mm). Comply with coating manufacturer's written instructions for cleaning, conversion coating, and applying and baking finish.

1. Selection: Match exterior mullions unless indicated otherwise.

PART 3 - EXECUTION

3.1 EXAMINATION

A. Acceptance of Surfaces and Conditions: Examine substrates to receive products and systems and associated work for compliance with requirements and other conditions affecting performance. Proceed only when unsatisfactory conditions have been corrected in a manner complying with Contract Documents. Starting work within a particular area will be construed as acceptance of surface conditions.

3.2 INSTALLATION, GENERAL

A. Installation Quality Standards: In addition to standards listed elsewhere, perform Work according to following, unless otherwise specified:

1. Respective manufacturer's written installation instructions.
2. Accepted submittals.
3. Contract Documents.

B. Control of Corrosion: Prevent galvanic action and other forms of corrosion by isolating metals and other materials from direct contact with incompatible materials.

1. Where aluminum will contact dissimilar metals, protect against galvanic action by painting contact surfaces with primer, applying sealant or tape, or installing nonconductive spacers as recommended by manufacturer for this purpose.
2. Where aluminum will contact concrete or masonry, protect against corrosion by painting contact surfaces with bituminous paint.

3.3 PREPARATION

A. General: Comply with manufacturer's instructions, recommendations, and specifications for cleaning and surface preparation. Surfaces shall have no defects, contaminants, or errors which would result in poor or potentially defective installation or would cause latent defects in Work.

3.4 EXAMINATION

A. Examine substrate surfaces to receive glazed aluminum partitions and associated work and conditions under which work will be installed. Do not proceed with work until unsatisfactory conditions have been corrected in a manner acceptable to installer. Starting work within a particular area will be construed as installer's acceptance of surface conditions.

3.5 INSTALLATION OF GLAZED ALUMINUM PARTITIONS

A. General:

1. Do not install damaged components.

2. Fit joints between aluminum components to produce hairline joints free of burrs and distortion.
3. Rigidly secure non-movement joints.
4. Install anchors with separators and isolators to prevent impediments to movement of joints.
5. Do not cut, trim, weld or braze component parts during erection, in any manner which would damage finish, decrease strength or result in visual imperfection or failure in performance of construction.
6. Weld components in concealed locations to minimize distortion or discoloration of finish. Protect glazing surfaces from welding.
7. Seal joints within glazed aluminum framing system according to sealant manufacturer's written instructions to produce weatherproof joints. Install joint filler behind sealant as recommended by sealant manufacturer.

B. Install components plumb and true in alignment with established lines and grades, and without warp or rack. Secure to structure with non-staining and non-corrosive shims, anchors, fasteners, spacers and fillers.

C. Install glazing as specified in Division 08 Section "Glazing".

3.6 ERECTION TOLERANCES

A. Erection Tolerances: Install to comply with the following non-accumulating maximum erection tolerances:

1. Location and Plane: Limit variation from true location and plane to 1/8 in (3 mm) in 12 ft (3 mm in 3.7 m); 1/4 in (6 mm) over total length.
2. Alignment:

    a. Where surfaces abut in line, limit offset from true alignment to 1/16 in (1.5 mm).
    b. Where surfaces meet at corners, limit offset from true alignment to 1/32 in (0.8 mm).

B. Diagonal Measurements: Limit difference between diagonal measurements to 1/8 in (3 mm).

3.7 ARCHITECTURAL METAL FINISH SCHEDULE: As indicated on the Interior Finish Legend.

END OF SECTION

SECTION 08 4216

INTERIOR ALUMINUM ENTRANCE DOORS

PART 1 - GENERAL

1.1 SUMMARY

A. Section Includes: Interior aluminum entrance doors and supplementary items necessary for installation.

1.2 DEFINITIONS

A. ADA/ABA Accessibility Guidelines: U.S. Architectural & Transportation Barriers Compliance Board's "Americans with Disability Act (ADA) and Architectural Barriers Act (ABA) Accessibility Guidelines for Buildings and Facilities".

1.3 ACTION SUBMITTALS

A. Product Data: Manufacturer's technical literature for each product and system indicated.

1. Include manufacturer's specifications for materials, finishes, construction details, installation instructions, and recommendations for maintenance.

B. Shop Drawings: Show details of fabrication and installation, including plans, elevations, sections, details of components and attachments to other work. Distinguish between shop and field-assembled work.

C. Hardware Schedule: Prepared by or under the supervision of supplier, detailing fabrication and assembly of aluminum entrance door hardware, as well as procedures and diagrams. Coordinate final door hardware schedule with doors, frames, and related work to ensure proper size, thickness, hand, function, and finish of door hardware.

D. Samples for Initial Selection: For units with factory-applied color finishes.

E. Samples for Verification: For each type of exposed finish required, in manufacturer's standard sizes.

1.4 INFORMATIONAL SUBMITTALS

A. Welding Certifications: Qualification certificates required by "Quality Assurance" Article. Include names of firms and personnel certified.

B. Qualification Data:

1. For firms and persons specified in "Quality Assurance" to demonstrate their capabilities and experience. Include list of completed projects.

1.5 QUALITY ASSURANCE

A. Manufacturer Qualifications: Manufacturer with not less than 10 years of experience in the successful production and in-service performance of products and systems similar to scope of this Project.

B. Welding Qualifications: Qualify procedures and personnel according to AWS qualification requirements and the following:

1. AWS D1.2/D1.2M, "Structural Welding Code - Aluminum".

C. Accessible Entrances: Comply with applicable provisions in the U.S. Architectural & Transportation Barriers Compliance Board's ADA-ABA Accessibility Guidelines and ICC/ANSI A117.1.

1.6 PROJECT CONDITIONS

A. Field Measurements: Where products and systems are indicated to fit walls and other construction, verify dimensions by field measurements before fabrication.

1.7 COORDINATION

A. Coordinate installation of products and systems with interfacing and adjoining construction to provide a successful installation without failure.

PART 2 - PRODUCTS

2.1 MANUFACTURERS AND PRODUCTS

A. Acceptable Manufacturers: Subject to compliance with requirements of Contract Documents as judged by the Architect, provide product by one of manufacturers listed. If not listed, submit as substitution according to the Conditions of the Contract and Division 01 Section "Substitution Procedures".

1. EFCO Corporation, a Pella Company.
2. Kawneer North America; an Alcoa Company.
3. Oldcastle BuildingEnvelope.
4. YKK AP America Inc.

B. Basis of Design (Product Standard): Contract Documents are based on products and systems specified to establish a standard of quality. Other manufacturers offering products having equivalent characteristics may be considered, provided deviations are minor and comply with requirements of Contract Documents as judged by the Architect.
1. Aluminum Entrance Door System; Medium Stile: Kawneer 350 Standard Entrances.
2. Heavy-Duty Aluminum Entrance Door System; Wide Stile: Kawneer 500 Tuffline Entrances.

2.2 MATERIALS, GENERAL

A. Single Source Responsibility: Furnish each type of product from single manufacturer. Provide secondary materials only as recommended by manufacturer of primary materials.

2.3 MATERIALS

A. Aluminum: Alloy and temper recommended by manufacturer for type of use and finish indicated.

1. Sheet and Plate: ASTM B 209 / B 209M.
2. Extruded Bars, Rods, Profiles, and Tubes: ASTM B 221 / B 221M.
3. Extruded Structural Pipe and Tubes: ASTM B 429 / B 429M.
4. Structural Profiles: ASTM B 308 / B 308M.
5. Welding Rods and Bare Electrodes: AWS A5.10/A5.10M.

2.4 GLAZING

A. Glazing: Provide glass of types and thicknesses indicated. Fabricate glass to sizes required for openings indicated with edge clearances and tolerances complying with manufacturer's recommendations. Comply with Division 08 Section "Glazing".

2.5 ALUMINUM ENTRANCE DOOR SYSTEMS

A. Standard-Duty Aluminum Entrance Doors: Manufacturer's standard-duty manual-swing operation entrance door system.

1. Door Construction: 1-3/4 in (44.5 mm) overall thickness, with minimum 0.125 in (3.2 mm) thick, extruded-aluminum tubular rail and stile members. Mechanically fasten corners with reinforcing brackets that are deeply penetrated and fillet welded or that incorporate concealed tie rods.
2. Door Design: Medium stile; 3-1/2 in (88.9 mm) nominal width at vertical stiles.

3. Glazing Stops and Gaskets: Square, snap-on, extruded-aluminum stops and preformed gaskets. Provide non-removable glazing stops on outside of door.
4. Door Hardware: As specified in Division 08 Section "Door Hardware".

2.6 ACCESSORY MATERIALS

A. Joint Sealants: For installation at perimeter of aluminum entrance doors, as specified in Division 07 Section "Joint Sealants".

B. Bituminous Paint: Cold-applied asphalt-mastic paint complying with SSPC-Paint 12 requirements except containing no asbestos, formulated for 30 mils (0.762 mm) thickness per coat.

2.7 FABRICATION

A. Form or extrude aluminum shapes before finishing.

B. Weld in concealed locations to greatest extent possible to minimize distortion or discoloration of finish. Welds shall be of adequate strength and durability, with jointing tight, flush, smooth and clean. Weld behind finished surfaces so as to cause no distortion and/or discoloration on the finished side. Remove weld spatter and welding oxides from exposed surfaces by descaling or grinding.

C. Fabricate components that, when assembled, have the following characteristics:

1. Profiles that is sharp, straight, and free of defects or deformations.
2. Accurately fitted joints with ends coped or mitered.
3. Physical isolation of glazing from framing members.
4. Accommodations for thermal and mechanical movements of glazing and framing to maintain required glazing edge clearances.
5. Provisions for field replacement of glazing. Provide minimum clearances and depth of glazing packets as recommended by glass manufacturer for thickness and type of glass indicated.
6. Fasteners, anchors, and connection devices that are concealed from view.

D. Door Frames: Provide tubular and channel frame entrance door frame assemblies, as indicated, with welded or mechanical joints in accordance with manufacturer's standards. Reinforce as required to support loads imposed by door operation and for installing entrance door hardware.

1. At interior doors, provide silencers at stops to prevent metal-to-metal contact. Install three silencers on strike jamb of single-door frames and two silencers on head of frames for pairs of doors.

E. Reinforce doors as required for installing entrance door hardware.

F. Hardware Installation: Factory-install entrance door hardware to the greatest extent possible. Cut, drill, and tap for factory-installed entrance door hardware before applying finishes.

2.8 FINISHES, GENERAL

A. Comply with NAAMM's "Metal Finishes Manual for Architectural and Metal Products" for recommendations for applying and designating finishes.

B. Protect mechanical finishes on exposed surfaces from damage by applying a strippable, temporary protective covering before shipping.

C. Appearance of Finished Work: Variations in appearance of abutting or adjacent pieces are acceptable if they are within one-half of the range of accepted Samples. Noticeable variations in the same piece are not acceptable. Variations in appearance of other components are acceptable if they are within the range of accepted Samples and are assembled or installed to minimize contrast.

2.9 ALUMINUM FINISHES

A. Finish designations prefixed by "AA" conform to the system established by the Aluminum Association for designating aluminum finishes.

1. Selections: As schedueld or as indicated in Design Selections.

B. Baked Enamel or Powder Coated Finish at Interior Surfaces: At Contractor's option, provide baked enamel or powder coated finish at interior surfaces complying with AAMA 2604 except with a minimum dry film thickness of 1.2 mils (0.03 mm). Comply with coating manufacturer's written instructions for cleaning, conversion coating, and applying and baking finish.

1. Selection: Match exterior mullions unless indicated otherwise.

C. High-Performance Organic Finish: High-Performance Organic Finish: Prepare, pretreat, and apply coating to exposed metal surfaces to comply with coating and resin manufacturers' written instructions. Provide dry film thickness, primers, color coats and clear coats required to comply with performance requirements and warranty periods indicated.

1. PVDF Fluoropolymer Finish: Fluoropolymer finish complying with AAMA 2605 and containing not less than 70 percent PVDF resin by weight in color coat.
2. FEVE Fluoropolymer Finish: Fluoropolymer finish complying with AAMA 2605 and containing 100 percent fluorinated ethylene vinyl ether (FEVE) resin in color coat.

D. Clear Anodic Finish: AAMA 611, AA-M12C22A31, Class II, 0.010 mm or thicker.

E. Color Anodic Finish: AAMA 611, AA-M12C22A32/A34, Class II, 0.010 mm or thicker.

PART 3 - EXECUTION

3.1 EXAMINATION

A. Acceptance of Surfaces and Conditions: Examine substrates to receive products and systems and associated work for compliance with requirements and other conditions affecting performance. Proceed only when unsatisfactory conditions have been corrected in a manner complying with Contract Documents. Starting work within a particular area will be construed as acceptance of surface conditions.

3.2 INSTALLATION, GENERAL

A. Installation Quality Standards: In addition to standards listed elsewhere, perform Work according to following, unless otherwise specified:

1. Respective manufacturer's written installation instructions.
2. Accepted submittals.
3. Contract Documents.

B. Control of Corrosion: Prevent galvanic action and other forms of corrosion by isolating metals and other materials from direct contact with incompatible materials.

1. Where aluminum will contact dissimilar metals, protect against galvanic action by painting contact surfaces with primer, applying sealant or tape, or installing nonconductive spacers as recommended by manufacturer for this purpose.

2. Where aluminum will contact concrete or masonry, protect against corrosion by painting contact surfaces with bituminous paint.

3.3 PREPARATION

A. General: Comply with manufacturer's instructions, recommendations, and specifications for cleaning and surface preparation. Surfaces shall have no defects, contaminants, or errors which would result in poor or potentially defective installation or would cause latent defects in Work.

3.4 INSTALLATION OF ALUMINUM ENTRANCE DOORS

A. General:

1. Do not install damaged components.
2. Fit joints between aluminum components to produce hairline joints free of burrs and distortion.
3. Rigidly secure non-movement joints.
4. Install anchors with separators and isolators to prevent impediments to movement of joints.
5. Do not cut, trim, weld or braze component parts during erection, in any manner which would damage finish, decrease strength or result in visual imperfection or failure in performance of construction.
6. Weld components in concealed locations to minimize distortion or discoloration of finish. Protect glazing surfaces from welding.
7. Seal joints within glazed aluminum framing system according to sealant manufacturer's written instructions to produce weatherproof joints. Install joint filler behind sealant as recommended by sealant manufacturer.

B. Install components plumb and true in alignment with established lines and grades, and without warp or rack. Secure to structure with non-staining and non-corrosive shims, anchors, fasteners, spacers and fillers.

C. Install doors to produce smooth operation and tight fit at contact points.

1. Field-Installed Entrance Door Hardware: Install surface-mounted entrance door hardware according to entrance door hardware manufacturers' written instructions using concealed fasteners to greatest extent possible.

D. Install glazing as specified in Division 08 Section "Glazing".

3.5 ERECTION TOLERANCES

A. Erection Tolerances: Install to comply with the following non-accumulating maximum erection tolerances:

1. Location and Plane: Limit variation from true location and plane to 1/8 in in 12 ft (3 mm in 3.7 m); 1/4 in (6 mm) over total length.
2. Alignment:

a. Where surfaces abut in line, limit offset from true alignment to 1/16 in (1.5 mm).
b. Where surfaces meet at corners, limit offset from true alignment to 1/32 in (0.8 mm).

B. Diagonal Measurements: Limit difference between diagonal measurements to 1/8 in (3 mm).

3.6 ADJUSTING

A. Adjust operating entrance door hardware to function smoothly as recommended by manufacturer.

1. For entrance doors accessible to people with disabilities, adjust closers to provide a 3-second closer sweep period for doors to move from a 70-degree open position to 3 in (75 mm) from the latch, measured to the leading door edge.

3.7 ARCHITECTURAL METAL FINISH SCHEDULE: As indicated in the Interior Finish Legend.

END OF SECTION

SECTION 08 4110

INTERIOR STOREFRONT

PART 1 - GENERAL

1.1 SUMMARY

A. Section Includes: Interior storefront (interior glazed aluminum partitions) and supplementary items necessary for installation.

B. Related Section:

1. Division 08 Section "Interior Aluminum Frames" for aluminum frames used for doors and glazing installed in gypsum board partitions.

1.2 ACTION SUBMITTALS

A. Product Data: Manufacturer's technical literature for each product and system indicated.

1. Include manufacturer's specifications for materials, finishes, construction details, installation instructions, and recommendations for maintenance.

B. Shop Drawings: Show details of fabrication and installation, including plans, elevations, sections, details of components and attachments to other work. Distinguish between shop and field-assembled work.

C. Samples for Initial Selection: For units with factory-applied color finishes.

D. Samples for Verification: For each type of exposed finish required, in manufacturer's standard sizes.

1.3 INFORMATIONAL SUBMITTALS

A. Welding Certifications: Qualification certificates required by "Quality Assurance" Article. Include names of firms and personnel certified.

B. Qualification Data:

1. For firms and persons specified in "Quality Assurance" to demonstrate their capabilities and experience. Include list of completed projects.

1.4 QUALITY ASSURANCE

A. Manufacturer Qualifications: Manufacturer with not less than 10 years of experience in the successful production and in-service performance of products and systems similar to scope of this Project.

B. Welding Qualifications: Qualify procedures and personnel according to AWS qualification requirements and the following:

1. AWS D1.2/D1.2M, "Structural Welding Code - Aluminum".

1.5 PROJECT CONDITIONS

A. Field Measurements: Where products and systems are indicated to fit walls and other construction, verify dimensions by field measurements before fabrication.

1.6 COORDINATION

A. Coordinate installation of products and systems with interfacing and adjoining construction to provide a successful installation without failure.

PART 2 - PRODUCTS

2.1 MANUFACTURERS AND PRODUCTS

A. Acceptable Manufacturers: Subject to compliance with requirements of Contract Documents as judged by the Architect, provide product by one of manufacturers listed. If not listed, submit as substitution according to the Conditions of the Contract and Division 01 Section "Substitution Procedures".

1. EFCO Corporation, a Pella Company.
2. Kawneer North America; an Alcoa Company.
3. Oldcastle BuildingEnvelope.
4. YKK AP America Inc.

B. Basis of Design (Product Standard): Contract Documents are based on products and systems specified to establish a standard of quality. Other manufacturers offering products having equivalent characteristics may be considered, provided deviations are minor and comply with requirements of Contract Documents as judged by the Architect.

1. Kawneer North America; an Alcoa Company; Trifab VG 450, 1-3/4 in (44 mm) face, 4-1/2 in (113 mm) depth, glass in center.

2.2 MATERIALS, GENERAL

A. Single Source Responsibility: Furnish each type of product from single manufacturer. Provide secondary materials only as recommended by manufacturer of primary materials

2.3 PERFORMANCE REQUIREMENTS

A. Structural Loads: Provide glazed aluminum partition systems capable of withstanding uniform load of 5 lbs per sq. ft. (25 kg/square m) based on testing manufacturer's standard system in assemblies similar to those indicated for this Project.

1. Deflection of framing members normal to wall plane is limited to 1/175 of clear span for spans up to 13 ft 6 in (4 m) and to 1/240 of clear span plus 1/4 in (6 mm) for spans greater than 13 ft 6 in (4 m) or an amount that restricts edge deflection of individual glazing lites to 3/4 in (19 mm) whichever is less.

2.4 MATERIALS

A. Aluminum: Alloy and temper recommended by manufacturer for type of use and finish indicated.

1. Sheet and Plate: ASTM B 209 / B 209M.
2. Extruded Bars, Rods, Profiles, and Tubes: ASTM B 221 / B 221M.
3. Extruded Structural Pipe and Tubes: ASTM B 429 / B 429M.
4. Structural Profiles: ASTM B 308 / B 308M.
5. Welding Rods and Bare Electrodes: AWS A5.10/A5.10M.

B. Internal Steel Reinforcement for High Spans: Manufacturer's standard zinc-rich, corrosion-resistant primer, complying with SSPC-PS Guide No. 12.00; applied immediately after surface preparation and pretreatment. Select surface preparation methods according to recommendations in SSPC-SP COM and prepare surfaces according to applicable SSPC standard.

1. Structural Shapes, Plates, and Bars: ASTM A 36/A 36M.
2. Cold-Rolled Sheet and Strip: ASTM A 1008/A 1008M.
3. Hot-Rolled Sheet and Strip: ASTM A 1011/A 1011M.

C. Framing Members: Manufacturer's standard extruded-aluminum framing members of thickness required and reinforced as required to support imposed loads.

D. Brackets and Reinforcements: Manufacturer's standard high-strength aluminum with nonstaining, nonferrous shims for aligning system components.

E. Fasteners and Accessories: Manufacturer's standard corrosion-resistant, nonstaining, nonbleeding fasteners and accessories compatible with adjacent materials.

2.5 GLAZING

A. Glazing: Provide glass of types and thicknesses indicated. Fabricate glass to sizes required for openings indicated with edge clearances and tolerances complying with manufacturer's recommendations. Comply with Division 08 Section "Glazing".

2.6 FABRICATION

A. Weld in concealed locations to greatest extent possible to minimize distortion or discoloration of finish. Remove weld spatter and welding oxides from exposed surfaces by descaling or grinding.

B. Framing Members: Fabricate components that, when assembled, have the following characteristics:

1. Profiles that are sharp, straight, and free of defects or deformations.
2. Accurately fitted joints with ends coped or mitered.
3. Physical and thermal isolation of glazing from framing members.
4. Accommodations for thermal and mechanical movements of glazing and framing to maintain required glazing edge clearances.
5. Fasteners, anchors, and connection devices that are concealed from view to greatest extent possible.
6. Fabricate for flush glazing (without projecting stops).

C. Door Frames: Reinforce as required to support loads imposed by door operation and for installing hardware.

1. Provide silencers at stops to prevent metal-to-metal contact. Install three silencers on strike jamb of single-door frames and two silencers on head of frames for pairs of doors.

D. After fabrication, clearly mark components to identify their locations in Project according to Shop Drawings.

2.7 ALUMINUM FINISHES

A. Finish designations prefixed by "AA" conform to the system established by the Aluminum Association for designating aluminum finishes.

1. Color Selections: As scheduled or as indicated in Design Selections.

B. Baked Enamel or Powder Coated Finish at Interior Surfaces: At Contractor's option, provide baked enamel or powder coated finish at interior surfaces complying with AAMA 2604 except with a minimum dry film thickness of 1.2 mils (0.03 mm). Comply with coating manufacturer's written instructions for cleaning, conversion coating, and applying and baking finish.

1. Selection: Match exterior mullions unless indicated otherwise.

PART 3 - EXECUTION

3.1 EXAMINATION

A. Acceptance of Surfaces and Conditions: Examine substrates to receive products and systems and associated work for compliance with requirements and other conditions affecting performance. Proceed only when unsatisfactory conditions have been corrected in a manner complying with Contract Documents. Starting work within a particular area will be construed as acceptance of surface conditions.

3.2 INSTALLATION, GENERAL

A. Installation Quality Standards: In addition to standards listed elsewhere, perform Work according to following, unless otherwise specified:

1. Respective manufacturer's written installation instructions.
2. Accepted submittals.
3. Contract Documents.

B. Control of Corrosion: Prevent galvanic action and other forms of corrosion by isolating metals and other materials from direct contact with incompatible materials.

1. Where aluminum will contact dissimilar metals, protect against galvanic action by painting contact surfaces with primer, applying sealant or tape, or installing nonconductive spacers as recommended by manufacturer for this purpose.
2. Where aluminum will contact concrete or masonry, protect against corrosion by painting contact surfaces with bituminous paint.

3.3 PREPARATION

A. General: Comply with manufacturer's instructions, recommendations, and specifications for cleaning and surface preparation. Surfaces shall have no defects, contaminants, or errors which would result in poor or potentially defective installation or would cause latent defects in Work.

3.4 EXAMINATION

A. Examine substrate surfaces to receive glazed aluminum partitions and associated work and conditions under which work will be installed. Do not proceed with work until unsatisfactory conditions have been corrected in a manner acceptable to installer. Starting work within a particular area will be construed as installer's acceptance of surface conditions.

3.5 INSTALLATION OF GLAZED ALUMINUM PARTITIONS

A. General:

1. Do not install damaged components.

2. Fit joints between aluminum components to produce hairline joints free of burrs and distortion.
3. Rigidly secure non-movement joints.
4. Install anchors with separators and isolators to prevent impediments to movement of joints.
5. Do not cut, trim, weld or braze component parts during erection, in any manner which would damage finish, decrease strength or result in visual imperfection or failure in performance of construction.
6. Weld components in concealed locations to minimize distortion or discoloration of finish. Protect glazing surfaces from welding.
7. Seal joints within glazed aluminum framing system according to sealant manufacturer's written instructions to produce weatherproof joints. Install joint filler behind sealant as recommended by sealant manufacturer.

B. Install components plumb and true in alignment with established lines and grades, and without warp or rack. Secure to structure with non-staining and non-corrosive shims, anchors, fasteners, spacers and fillers.

C. Install glazing as specified in Division 08 Section "Glazing".

3.6 ERECTION TOLERANCES

A. Erection Tolerances: Install to comply with the following non-accumulating maximum erection tolerances:

1. Location and Plane: Limit variation from true location and plane to 1/8 in (3 mm) in 12 ft (3 mm in 3.7 m); 1/4 in (6 mm) over total length.
2. Alignment:

    a. Where surfaces abut in line, limit offset from true alignment to 1/16 in (1.5 mm).
    b. Where surfaces meet at corners, limit offset from true alignment to 1/32 in (0.8 mm).

B. Diagonal Measurements: Limit difference between diagonal measurements to 1/8 in (3 mm).

3.7 ARCHITECTURAL METAL FINISH SCHEDULE: As indicated on the Interior Finish Legend.

END OF SECTION

SECTION 08 4216

INTERIOR ALUMINUM ENTRANCE DOORS

PART 1 - GENERAL

1.1 SUMMARY

A. Section Includes: Interior aluminum entrance doors and supplementary items necessary for installation.

1.2 DEFINITIONS

A. ADA/ABA Accessibility Guidelines: U.S. Architectural & Transportation Barriers Compliance Board's "Americans with Disability Act (ADA) and Architectural Barriers Act (ABA) Accessibility Guidelines for Buildings and Facilities".

1.3 ACTION SUBMITTALS

A. Product Data: Manufacturer's technical literature for each product and system indicated.

1. Include manufacturer's specifications for materials, finishes, construction details, installation instructions, and recommendations for maintenance.

B. Shop Drawings: Show details of fabrication and installation, including plans, elevations, sections, details of components and attachments to other work. Distinguish between shop and field-assembled work.

C. Hardware Schedule: Prepared by or under the supervision of supplier, detailing fabrication and assembly of aluminum entrance door hardware, as well as procedures and diagrams. Coordinate final door hardware schedule with doors, frames, and related work to ensure proper size, thickness, hand, function, and finish of door hardware.

D. Samples for Initial Selection: For units with factory-applied color finishes.

E. Samples for Verification: For each type of exposed finish required, in manufacturer's standard sizes.

1.4 INFORMATIONAL SUBMITTALS

A. Welding Certifications: Qualification certificates required by "Quality Assurance" Article. Include names of firms and personnel certified.

B. Qualification Data:

1. For firms and persons specified in "Quality Assurance" to demonstrate their capabilities and experience. Include list of completed projects.

1.5 QUALITY ASSURANCE

A. Manufacturer Qualifications: Manufacturer with not less than 10 years of experience in the successful production and in-service performance of products and systems similar to scope of this Project.

B. Welding Qualifications: Qualify procedures and personnel according to AWS qualification requirements and the following:

1. AWS D1.2/D1.2M, "Structural Welding Code - Aluminum".

C. Accessible Entrances: Comply with applicable provisions in the U.S. Architectural & Transportation Barriers Compliance Board's ADA-ABA Accessibility Guidelines and ICC/ANSI A117.1.

1.6 PROJECT CONDITIONS

A. Field Measurements: Where products and systems are indicated to fit walls and other construction, verify dimensions by field measurements before fabrication.

1.7 COORDINATION

A. Coordinate installation of products and systems with interfacing and adjoining construction to provide a successful installation without failure.

PART 2 - PRODUCTS

2.1 MANUFACTURERS AND PRODUCTS

A. Acceptable Manufacturers: Subject to compliance with requirements of Contract Documents as judged by the Architect, provide product by one of manufacturers listed. If not listed, submit as substitution according to the Conditions of the Contract and Division 01 Section "Substitution Procedures".

1. EFCO Corporation, a Pella Company.
2. Kawneer North America; an Alcoa Company.
3. Oldcastle BuildingEnvelope.
4. YKK AP America Inc.

B. Basis of Design (Product Standard): Contract Documents are based on products and systems specified to establish a standard of quality. Other manufacturers offering products having equivalent characteristics may be considered, provided deviations are minor and comply with requirements of Contract Documents as judged by the Architect.
1. Aluminum Entrance Door System; Medium Stile: Kawneer 350 Standard Entrances.
2. Heavy-Duty Aluminum Entrance Door System; Wide Stile: Kawneer 500 Tuffline Entrances.

2.2 MATERIALS, GENERAL

A. Single Source Responsibility: Furnish each type of product from single manufacturer. Provide secondary materials only as recommended by manufacturer of primary materials.

2.3 MATERIALS

A. Aluminum: Alloy and temper recommended by manufacturer for type of use and finish indicated.

1. Sheet and Plate: ASTM B 209 / B 209M.
2. Extruded Bars, Rods, Profiles, and Tubes: ASTM B 221 / B 221M.
3. Extruded Structural Pipe and Tubes: ASTM B 429 / B 429M.
4. Structural Profiles: ASTM B 308 / B 308M.
5. Welding Rods and Bare Electrodes: AWS A5.10/A5.10M.

2.4 GLAZING

A. Glazing: Provide glass of types and thicknesses indicated. Fabricate glass to sizes required for openings indicated with edge clearances and tolerances complying with manufacturer's recommendations. Comply with Division 08 Section "Glazing".

2.5 ALUMINUM ENTRANCE DOOR SYSTEMS

A. Standard-Duty Aluminum Entrance Doors: Manufacturer's standard-duty manual-swing operation entrance door system.

1. Door Construction: 1-3/4 in (44.5 mm) overall thickness, with minimum 0.125 in (3.2 mm) thick, extruded-aluminum tubular rail and stile members. Mechanically fasten corners with reinforcing brackets that are deeply penetrated and fillet welded or that incorporate concealed tie rods.
2. Door Design: Medium stile; 3-1/2 in (88.9 mm) nominal width at vertical stiles.

3. Glazing Stops and Gaskets: Square, snap-on, extruded-aluminum stops and preformed gaskets. Provide non-removable glazing stops on outside of door.
4. Door Hardware: As specified in Division 08 Section "Door Hardware".

2.6 ACCESSORY MATERIALS

A. Joint Sealants: For installation at perimeter of aluminum entrance doors, as specified in Division 07 Section "Joint Sealants".

B. Bituminous Paint: Cold-applied asphalt-mastic paint complying with SSPC-Paint 12 requirements except containing no asbestos, formulated for 30 mils (0.762 mm) thickness per coat.

2.7 FABRICATION

A. Form or extrude aluminum shapes before finishing.

B. Weld in concealed locations to greatest extent possible to minimize distortion or discoloration of finish. Welds shall be of adequate strength and durability, with jointing tight, flush, smooth and clean. Weld behind finished surfaces so as to cause no distortion and/or discoloration on the finished side. Remove weld spatter and welding oxides from exposed surfaces by descaling or grinding.

C. Fabricate components that, when assembled, have the following characteristics:

1. Profiles that is sharp, straight, and free of defects or deformations.
2. Accurately fitted joints with ends coped or mitered.
3. Physical isolation of glazing from framing members.
4. Accommodations for thermal and mechanical movements of glazing and framing to maintain required glazing edge clearances.
5. Provisions for field replacement of glazing. Provide minimum clearances and depth of glazing packets as recommended by glass manufacturer for thickness and type of glass indicated.
6. Fasteners, anchors, and connection devices that are concealed from view.

D. Door Frames: Provide tubular and channel frame entrance door frame assemblies, as indicated, with welded or mechanical joints in accordance with manufacturer's standards. Reinforce as required to support loads imposed by door operation and for installing entrance door hardware.

1. At interior doors, provide silencers at stops to prevent metal-to-metal contact. Install three silencers on strike jamb of single-door frames and two silencers on head of frames for pairs of doors.

E. Reinforce doors as required for installing entrance door hardware.

F. Hardware Installation: Factory-install entrance door hardware to the greatest extent possible. Cut, drill, and tap for factory-installed entrance door hardware before applying finishes.

2.8 FINISHES, GENERAL

A. Comply with NAAMM's "Metal Finishes Manual for Architectural and Metal Products" for recommendations for applying and designating finishes.

B. Protect mechanical finishes on exposed surfaces from damage by applying a strippable, temporary protective covering before shipping.

C. Appearance of Finished Work: Variations in appearance of abutting or adjacent pieces are acceptable if they are within one-half of the range of accepted Samples. Noticeable variations in the same piece are not acceptable. Variations in appearance of other components are acceptable if they are within the range of accepted Samples and are assembled or installed to minimize contrast.

2.9 ALUMINUM FINISHES

A. Finish designations prefixed by "AA" conform to the system established by the Aluminum Association for designating aluminum finishes.

1. Selections: As schedueld or as indicated in Design Selections.

B. Baked Enamel or Powder Coated Finish at Interior Surfaces: At Contractor's option, provide baked enamel or powder coated finish at interior surfaces complying with AAMA 2604 except with a minimum dry film thickness of 1.2 mils (0.03 mm). Comply with coating manufacturer's written instructions for cleaning, conversion coating, and applying and baking finish.

1. Selection: Match exterior mullions unless indicated otherwise.

C. High-Performance Organic Finish: High-Performance Organic Finish: Prepare, pretreat, and apply coating to exposed metal surfaces to comply with coating and resin manufacturers' written instructions. Provide dry film thickness, primers, color coats and clear coats required to comply with performance requirements and warranty periods indicated.

1. PVDF Fluoropolymer Finish: Fluoropolymer finish complying with AAMA 2605 and containing not less than 70 percent PVDF resin by weight in color coat.
2. FEVE Fluoropolymer Finish: Fluoropolymer finish complying with AAMA 2605 and containing 100 percent fluorinated ethylene vinyl ether (FEVE) resin in color coat.

D. Clear Anodic Finish: AAMA 611, AA-M12C22A31, Class II, 0.010 mm or thicker.

E. Color Anodic Finish: AAMA 611, AA-M12C22A32/A34, Class II, 0.010 mm or thicker.

PART 3 - EXECUTION

3.1 EXAMINATION

A. Acceptance of Surfaces and Conditions: Examine substrates to receive products and systems and associated work for compliance with requirements and other conditions affecting performance. Proceed only when unsatisfactory conditions have been corrected in a manner complying with Contract Documents. Starting work within a particular area will be construed as acceptance of surface conditions.

3.2 INSTALLATION, GENERAL

A. Installation Quality Standards: In addition to standards listed elsewhere, perform Work according to following, unless otherwise specified:

1. Respective manufacturer's written installation instructions.
2. Accepted submittals.
3. Contract Documents.

B. Control of Corrosion: Prevent galvanic action and other forms of corrosion by isolating metals and other materials from direct contact with incompatible materials.

1. Where aluminum will contact dissimilar metals, protect against galvanic action by painting contact surfaces with primer, applying sealant or tape, or installing nonconductive spacers as recommended by manufacturer for this purpose.

2. Where aluminum will contact concrete or masonry, protect against corrosion by painting contact surfaces with bituminous paint.

3.3 PREPARATION

A. General: Comply with manufacturer's instructions, recommendations, and specifications for cleaning and surface preparation. Surfaces shall have no defects, contaminants, or errors which would result in poor or potentially defective installation or would cause latent defects in Work.

3.4 INSTALLATION OF ALUMINUM ENTRANCE DOORS

A. General:

1. Do not install damaged components.
2. Fit joints between aluminum components to produce hairline joints free of burrs and distortion.
3. Rigidly secure non-movement joints.
4. Install anchors with separators and isolators to prevent impediments to movement of joints.
5. Do not cut, trim, weld or braze component parts during erection, in any manner which would damage finish, decrease strength or result in visual imperfection or failure in performance of construction.
6. Weld components in concealed locations to minimize distortion or discoloration of finish. Protect glazing surfaces from welding.
7. Seal joints within glazed aluminum framing system according to sealant manufacturer's written instructions to produce weatherproof joints. Install joint filler behind sealant as recommended by sealant manufacturer.

B. Install components plumb and true in alignment with established lines and grades, and without warp or rack. Secure to structure with non-staining and non-corrosive shims, anchors, fasteners, spacers and fillers.

C. Install doors to produce smooth operation and tight fit at contact points.

1. Field-Installed Entrance Door Hardware: Install surface-mounted entrance door hardware according to entrance door hardware manufacturers' written instructions using concealed fasteners to greatest extent possible.

D. Install glazing as specified in Division 08 Section "Glazing".

3.5 ERECTION TOLERANCES

A. Erection Tolerances: Install to comply with the following non-accumulating maximum erection tolerances:

1. Location and Plane: Limit variation from true location and plane to 1/8 in in 12 ft (3 mm in 3.7 m); 1/4 in (6 mm) over total length.
2. Alignment:

a. Where surfaces abut in line, limit offset from true alignment to 1/16 in (1.5 mm).
b. Where surfaces meet at corners, limit offset from true alignment to 1/32 in (0.8 mm).

B. Diagonal Measurements: Limit difference between diagonal measurements to 1/8 in (3 mm).

3.6 ADJUSTING

A. Adjust operating entrance door hardware to function smoothly as recommended by manufacturer.

1. For entrance doors accessible to people with disabilities, adjust closers to provide a 3-second closer sweep period for doors to move from a 70-degree open position to 3 in (75 mm) from the latch, measured to the leading door edge.

3.7 ARCHITECTURAL METAL FINISH SCHEDULE: As indicated in the Interior Finish Legend.

END OF SECTION

SECTION 08 4243

MEDICAL SPECIALTY SLIDING ENTRANCES

PART 1 - GENERAL

1.1 SUMMARY

A. Section Includes: Interior, manually operated, medical specialty sliding entrance door assemblies with emergency breakaway capabilities and supplementary items necessary for installation.

1.2 ACTION SUBMITTALS

A. Product Data: Manufacturer's technical literature for each product and system indicated.

1. Include manufacturer's specifications for materials, finishes, construction details, installation instructions, and recommendations for maintenance.

B. Shop Drawings: Show details of fabrication and installation, including plans, elevations, sections, details of components and attachments to other work. Distinguish between shop and field-assembled work.

C. Samples for Verification: For each type of exposed finish required, in manufacturer's standard sizes.

1.3 INFORMATIONAL SUBMITTALS

A. Qualification Data:

1. For firms and persons specified in "Quality Assurance" to demonstrate their capabilities and experience. Include list of completed projects.

B. Warranties: Sample of special warranties.

1.4 QUALITY ASSURANCE

A. Manufacturer Qualifications: Manufacturer with not less than 5 years of experience in the successful production and in-service performance of products and systems similar to scope of this Project.

1.5 PROJECT CONDITIONS

A. Field Measurements: Where products and systems are indicated to fit walls and other construction, verify dimensions by field measurements before fabrication.

1.6 COORDINATION

A. Coordinate installation of products and systems with interfacing and adjoining construction to provide a successful installation without failure.

B. Coordinate sizes and locations of recesses in concrete floors for recessed sliding tracks. Concrete, reinforcement, and formwork requirements are specified in Division 03 Sections.

C. Templates: Distribute for doors, frames, and other work specified to be factory prepared for installing sliding entrances.

1.7 WARRANTY

A. Manufacturer's Warranty: Furnish manufacturer's written material and labor warranty signed by an authorized representative using manufacturer's standard form agreeing to furnish materials and labor required to repair or replace work which exhibits material defects caused by manufacture or design of product.

1. "Defects" are defined to include but not limited to deterioration or failure to perform as required and include, but are not limited to, the following:

   a. Structural failures including, but not limited to, excessive deflection.
   b. Faulty operation of hardware.
   c. Deterioration of metals, metal finishes, and other materials beyond normal use.

2. Warranty Period: Two years from date of Substantial Completion.

PART 2 - PRODUCTS

2.1 MANUFACTURERS AND PRODUCTS

A. Acceptable Manufacturers: Subject to compliance with requirements of Contract Documents as judged by the Architect, provide product by one of manufacturers listed. If not listed, submit as substitution according to Conditions of the Contract and Division 01 Section "Substitution Procedures".

1. Besam Entrance Solutions; an ASSA ABLOY Group Co.
2. Horton Automatics; a division of Overhead Door Corp.
3. Nabco Entrances, Inc.
4. Record-USA
5. Stanley Access Technologies; Division of The Stanley Works

2.2 MATERIALS, GENERAL

A. Single Source Responsibility: Furnish each type of product from single manufacturer. Provide secondary materials only as recommended by manufacturer of primary materials.

2.3 MATERIALS

A. Aluminum: Alloy and temper recommended by manufacturer for type of use and finish indicated.

1. Extruded Bars, Rods, Profiles, and Tubes: ASTM B 221(ASTM B 221M).
2. Sheet and Plate: ASTM B 209(ASTM B 209M).

B. Sealants and Joint Fillers: As specified in Division 07 Section "Joint Sealants."

C. Bituminous Coating: Cold-applied asphalt emulsion complying with ASTM D 1187.

2.4 MEDICAL SPECIALTY SLIDING ENTRANCE ASSEMBLIES

A. General: Provide manufacturer's standard sliding entrances including door leaves, sidelites, framing, headers, carrier assemblies, roller tracks, and accessories required for a complete installation.

B. Opening-Force Requirement, Sliding: Not more than 5 lbf (22.2 N) to fully open door.

C. Medical Specialty Sliding Entrance:

1. Configuration: Panel configuration as indicated on drawings with breakaway capability
2. Floor Track Configuration: No track across sliding-door opening and at sidelites (trackless).

2.5 COMPONENTS

A. Framing Members: Manufacturer's standard extruded aluminum, minimum 0.125 in (3.2 mm) thick and reinforced as required to support imposed loads.

1. Nominal Size: 1-3/4 by 4-1/2 in (45 by 115 mm).
2. Extruded Glazing Stops and Applied Trim: Minimum 0.062 in (1.6 mm) wall thickness.

B. Stile and Rail Doors: Manufacturer's standard 1-3/4 in (45 mm) thick glazed doors with minimum 0.125 in (3.2 mm) thick, extruded-aluminum tubular stile and rail members. Mechanically fasten corners with reinforcing brackets that are welded, or incorporate concealed tie rods that span full length of top and bottom rails.

1. Glazing Stops and Gaskets: Manufacturer's standard snap-on, extruded-aluminum stops and preformed gaskets for glazing indicated.
2. Stile Design: Medium stile; 3-1/2 in (90 mm) nominal width.
3. Rail Design: 3-1/2 in (90 mm) nominal height.
4. Muntin Bars: Horizontal tubular rail member for each door; match stile design.

C. Sidelites: Manufacturer's standard 1-3/4 in (45 mm) deep sidelites with minimum 0.125 in (3.2 mm) thick, extruded-aluminum tubular stile and rail members matching door design and finish.

1. Glazing Stops and Gaskets: Same materials and design as for stile and rail door.
2. Muntin Bars: Horizontal tubular rail member for each sidelite; match stile design.

D. Glazing: As specified in Division 08 Section "Glazing."

E. Integral Louver Blinds Unit: 1 in (25 mm) thick insulated glass unit consisting of two 1/8 in (3 mm) tempered glass lites sandwiched with white mini-blinds in air space; blinds to be tilted via external ADA-compliant device both sides of door (unless indicated otherwise) having a force to tilt blinds of less than 2.25 lbf (10 N). Provide integral louver blinds manufacturer's standard framing kit for a complete installation.

1. Manufacturer and Product: Kyler Industries; Screenline series, Model SL20AA (Tilt Only, Dual Operator).

F. Headers: Fabricated from minimum 0.125 in (3.2 mm) thick extruded aluminum, and extending full width of sliding entrance units to conceal carrier assemblies and roller tracks. Provide hinged or removable access panels for service and adjustment. Secure panels to prevent unauthorized access.

1. Capacity: Capable of supporting doors up to 100 lb (45 kg) per leaf over spans up to 14 ft (4.3 m) without intermediate supports.
2. Provide sag rods for spans exceeding 14 ft (4.3 m).

G. Carrier Assemblies and Overhead Roller Tracks: Manufacturer's standard carrier assembly that allows vertical adjustment; consisting of nylon- or delrin-covered, ball-bearing-center steel wheels operating on a continuous roller track or of ball-bearing-center steel wheels operating on a nylon- or delrin-covered, continuous roller track. Support doors from carrier assembly by cantilever and pivot assembly. Provide minimum of two ball-bearing roller wheels and two antirise rollers for each active leaf.

H. Concealed Bottom Rollers: Manufacturer's standard.

I. Brackets and Reinforcements: Manufacturer's standard, high-strength aluminum with nonstaining, nonferrous shims for aligning system components.

J. Fasteners and Accessories: Manufacturer's standard, corrosion-resistant, nonstaining, nonbleeding fasteners and accessories compatible with adjacent materials.

2.6 HARDWARE

A. General: Provide units in sizes and types recommended by sliding entrance and hardware manufacturers for entrances and uses indicated. Finish exposed parts to match door finish unless otherwise indicated.

B. Positive Latching: Doors shall have automatic positive latching with lever handle operation.

C. Breakaway Hardware: Provide release hardware that allows indicated panels to swing out in direction of egress to full 90 degrees from sliding mode.

1. Maximum Force to Open Panel: 25 lbf (111 N).
2. Release Position: At any point in sliding door travel.

D. Limit Arm: Provide to control doors in the swing mode.

E. Manual Flush Bolts: BHMA A156.16, Grade 1, edge mortised, lever-extension type; located at bottom of each swing-out sidelite.

F. Weather Stripping: Manufacturer's standard replaceable components.

1. Compression Type: ASTM D 2000, molded neoprene, or ASTM D 2287, molded PVC.
2. Sliding Type: AAMA 701, wool, polypropylene, or nylon woven pile with nylon-fabric or aluminum-strip backing.

G. Weather Sweeps: Manufacturer's standard, nylon brush sweep mounted to underside of door bottom.

2.7 FABRICATION

A. General: Factory-fabricate sliding entrance components to designs, sizes, and thicknesses indicated and to comply with indicated standards.

1. Fabricate aluminum components before finishing.
2. Weld in concealed locations to greatest extent possible to minimize distortion or discoloration of finish. Remove weld spatter and welding oxides from exposed surfaces by descaling or grinding.
3. Use concealed fasteners to greatest extent possible. Where exposed fasteners are required, use countersunk Phillips flat-head machine screws, finished to match framing.

    a. Where fasteners are subject to loosening or turning out from structural movements or vibration, use self-locking devices.
    b. Reinforce members as required to receive fastener threads.

4. Where aluminum will contact dissimilar metals, protect against galvanic action by painting contact surfaces with primer or by applying sealant or tape recommended by manufacturer for this purpose.

B. Framing: Provide sliding entrances as prefabricated assemblies. Complete fabrication, assembly, finishing, hardware application, and other work before shipment to Project site.

1. Fabricate tubular and channel frame assemblies with manufacturer's standard welded or mechanical joints. Provide subframes and reinforcement as required for a complete system to support required loads.
2. Perform fabrication operations in manner that prevents damage to exposed finish surfaces.
3. Form profiles that are straight and free of defects or deformations.
4. Provide components with concealed fasteners and anchor and connection devices.
5. Fabricate components with accurately fitted joints with ends coped or mitered to produce hairline joints free of burrs and distortion.
6. Provide anchorage and alignment brackets for concealed support of assembly from the building structure.

C. Doors: Factory fabricated and assembled in profiles indicated. Reinforce as required to support imposed loads and for installing hardware.

D. Glazing: Fabricate framing with minimum glazing edge clearances for thickness and type of glazing indicated, according to GANA's "Glazing Manual."

E. Hardware: Factory-install hardware to the greatest extent possible; remove only as required for final finishing operation and for delivery to and installation at Project site. Cut, drill, and tap for factory-installed hardware before applying finishes.

1. Provide sliding weather stripping, mortised into door, at perimeter of sliding doors and breakaway sidelites.

2.8 GENERAL FINISH REQUIREMENTS

A. Comply with NAAMM's "Metal Finishes Manual for Architectural and Metal Products" for recommendations for applying and designating finishes.

B. Apply anodic finishes to formed-metal after fabrication unless otherwise indicated.

C. Appearance of Finished Work: Noticeable variations in same piece are not acceptable. Variations in appearance of adjoining components are acceptable if they are within the range of approved Samples and are assembled or installed to minimize contrast.

2.9 ALUMINUM FINISHES

A. Clear Anodic Finish: AAMA 611, AA-M12C22A31, Class II, 0.010 mm or thicker.

PART 3 - EXECUTION

3.1 EXAMINATION

A. Acceptance of Surfaces and Conditions: Examine substrates to receive products and systems and associated work for compliance with requirements and other conditions affecting performance. Proceed only when unsatisfactory conditions have been corrected in a manner complying with Contract Documents. Starting work within a particular area will be construed as acceptance of surface conditions.

3.2 INSTALLATION, GENERAL

A. Installation Quality Standards: In addition to standards listed elsewhere, perform work according to following, unless otherwise specified:

1. Respective manufacturer’s written installation instructions.
2. Approved submittals.
3. Contract Documents.

B. Control of Corrosion: Prevent galvanic action and other forms of corrosion by isolating metals and other materials from direct contact with incompatible materials

3.3 PREPARATION

A. General: Comply with manufacturer's instructions, recommendations, and specifications for cleaning and surface preparation. Surfaces shall have no defects, contaminants, or errors which would result in poor or potentially defective installation or would cause latent defects in Work.

3.4 INSTALLATION

A. General: Do not install damaged components. Fit frame joints to produce hairline joints free of burrs and distortion. Rigidly secure nonmovement joints. Seal joints watertight.

1. Where aluminum will contact dissimilar metals, protect against galvanic action by painting contact surfaces with primer or by applying sealant or tape recommended by manufacturer for this purpose.
2. Where aluminum will contact concrete or masonry, protect against corrosion by painting contact surfaces with bituminous coating.

B. Install sliding entrances plumb and true in alignment with established lines and grades without warp or rack of framing members and doors. Anchor securely in place.

1. Install surface-mounted hardware using concealed fasteners to greatest extent possible.
2. Set headers, carrier assemblies, tracks, operating brackets, and guides level and true to location with anchorage for permanent support.

C. Glazing: Install glazing as specified in Division 08 Section "Glazing."

D. Sealants: Comply with requirements in Division 07 Section "Joint Sealants" for installing sealants, fillers, and gaskets.

1. Set framing members, floor tracks, and flashings in full sealant bed.
2. Seal perimeter of framing members with sealant.

3.5 ADJUSTING

A. Adjust operating hardware and moving parts for smooth and safe operation; lubricate as recommended by manufacturer.

B. Adjust force to open swing panels.

3.6 CLEANING AND PROTECTION

A. Clean glass and metal surfaces promptly after installation. Remove excess glazing and sealant compounds, dirt, and other substances. Repair damaged finish to match original finish.

B. Comply with requirements in Division 08 Section "Glazing" for cleaning and protecting glass.

END OF SECTION

SECTION 08 4400

GLAZED ALUMINUM FRAMING SYSTEMS

PART 1 - GENERAL

1.1 SUMMARY

A. Section Includes: Glazed aluminum framing systems and supplementary items necessary for installation.

1. Conventionally glazed aluminum curtain wall and window wall systems.
2. Aluminum entrance doors.

1.2 DEFINITIONS

A. ADA/ABA Accessibility Guidelines for Aluminum Entrance Doors: U.S. Architectural & Transportation Barriers Compliance Board's "Americans with Disability Act (ADA) and Architectural Barriers Act (ABA) Accessibility Guidelines for Buildings and Facilities".

1.3 DELEGATED ENGINEERING REQUIREMENTS

A. Contract Documents Design Intent: Drawings and Specifications indicate design intent for products and systems and do not necessarily indicate or specify total Work required. Contract Documents shall not be construed as an engineered design; furnish and install all Work required for a complete installation.

B. Delegated Engineering Responsibility: Contractor shall employ a qualified professional engineer to provide engineering for products and systems including attachment to building structure required to meet design intent of Contract Documents.

1. Preparation of structural analysis data including engineering calculations, shop drawings and other submittals signed and sealed by the qualified professional engineer.

C. Delegated Engineering Professional Qualifications: Professional engineer legally authorized to practice in jurisdiction where Project is located and experienced in providing engineering services of kind indicated for products and systems similar to this Project and has a record of successful in-service performance.

D. Coordination of Work:

1. Product Variations: In the event of minor differences between products and systems of acceptable or available manufacturers, Contractor shall notify Architect of such differences and resolve conflicts in a timely manner. Failure of Contractor to provide notification shall be construed as acceptance of conditions indicated, and changes caused by minor differences between products and Contract Documents shall be included in the Work at no additional cost to Owner.

2. Allowable Adjustments: Minor dimension and profile adjustments may be made in interest of fabrication or erection methods or techniques or ability to satisfy design intent, provided design intent is maintained as determined by Architect. Proposed deviations shall include a detailed analysis of impact to adjacent substrates or other building systems, including related design or construction cost impacts. If accepted by Architect, deviations causing changes in materials, constructability, substrates, or conditions shall be included in the Work at no additional cost to Owner.

1.4 ACTION SUBMITTALS

A. Product Data: Manufacturer's technical literature for each product and system indicated.

1. Include manufacturer's specifications for materials, finishes, construction details, installation instructions, and recommendations for maintenance.

B. Shop Drawings: Show details of fabrication and installation, including plans, elevations, sections, details of components and attachments to other work. Distinguish between shop and field-assembled work.

1. Prepared by manufacturer, not installer.
2. Include typical unit elevations at 1/2 in (12 mm) scale and details at full scale.
3. Include details of provisions for assembly expansion and contraction and for draining moisture occurring within the assembly to the exterior.
4. Indicate where and how the system deviates from Contract Documents.
5. Shop drawings shall contain seal of a professional engineer currently registered in licensing jurisdiction of the project and a written statement that the framing system conforms to project requirements, applicable codes, and specified conditions.
6. Provide for information only, material properties and other information needed for structural analysis including computations, prepared, signed, or, and sealed by a professional engineer licensed to practice in the jurisdiction where the project is located.

    a. Calculations shall include but not limited to the following:

        1) Section properties for framing members.
        2) Analysis of framing members.
        3) Analysis of anchors and embedded anchors in concrete structure.
        4) Analysis of stress in structural silicone.
        5) Analysis of glass thicknesses and strength.

2. Submittal shall contain statement explaining how proposed system design will accommodate infiltrated and condensate water.
3. Design Modifications: If design modifications are proposed to meet performance requirements and field conditions, submit design calculations and Shop Drawings. Do not adversely affect the appearance, durability, or strength of units when modifying details or materials and maintain the general design concept.
4. Include full-size isometric details of each vertical-to-horizontal intersection of glazed aluminum framing systems, showing the following:

    a. Mullion details, including reinforcement and stiffeners.

b. Joinery details, including concealed welds.
c. Anchorage.
d. Expansion provisions.
e. Glazing details.
f. Flashing and drainage details.
g. Weather-stripping details.
h. Thermal-break details.
i. Weatherseals within curtainwall framing joinery.
j. Perimeter weatherseals and strucutral seals.
k. Interface with other building construction.
l. De-glazing and re-glazing procedures.
m. Identification and detail of perimeter fire containment system.

5. Submit insert/embed drawings including layout and enlarged details. Include detail and engineering calculations for field modifications due to location and/or omitted inserts/embeds.

B. Hardware Schedule for Aluminum Entrance Doors: Prepared by or under the supervision of supplier, detailing fabrication and assembly of aluminum entrance door hardware, as well as procedures and diagrams. Coordinate final door hardware schedule with doors, frames, and related work to ensure proper size, thickness, hand, function, and finish of door hardware.

C. Samples for Verification Purposes: Provide pairs of samples for each finish type and color on 12 in (300 mm) long sections of extrusions or formed shapes and on 6 in (150 mm) squares of aluminum sheet or plate. Include 2 or more units in each sample set showing the extreme limits of variations expected in color and texture of finish.

D. Welding Certifications: Qualification certificates required by “Quality Assurance” Article. Include names of firms and personnel certified.

E. Energy Performance Certificates: For glazed aluminum curtain walls, accessories, and components, from manufacturer.

1. Basis for Certification: NFRC-certified energy performance values for each glazed aluminum curtain wall.

F. Delegated Engineering Calculations: Informational submittal for products indicated to comply with design loads, include structural analysis data signed and sealed by the qualified professional engineer responsible for their preparation; test reports are not acceptable substitute for calculations.

G. Product Test Reports: Written reports based on evaluation of comprehensive tests performed by qualified testing agency indicating that each product complies with requirements.

H. Field Quality Control Reports: Written report of testing and inspection required by "Field Quality Control".

I. Manufacturer’’s Project Acceptance Document: Certification by the manufacturer that its products and systems are approved, acceptable, suitable for use in specific locations, for specific details, and for applications indicated, specified, or required, and that a warranty will be issued.

J. Qualification Data:

1. For firms and persons specified in "Quality Assurance" to demonstrate their capabilities and experience. Include list of completed projects.

K. Warranty: Sample of warranty.

1. Provide manufacturer’s written warranty covering materials and installation (labor) stating obligations, remedies, limitations and exclusions.

1.2 CLOSEOUT SUBMITTALS

A. Maintenance Data: To include in maintenance manuals.

1. Structural-Sealant Glazing: For structural-sealant glazing, include ASTM C 1401 recommendations for post-installation-phase, quality-control program.

1.3 MAINTENANCE MATERIAL SUBMITTALS

A. Extra Materials: Provide extra materials to designated storage area as directed by Owner. Materials shall comply with same requirements for materials used in construction:

1. One percent of total square footage of each glass type in sizes determined by the Architect and Consultant.
2. Three sets of entrance door operable hardware.
3. 500 ft of typical glazed aluminum framing system glazing gaskets.
4. Two gallons of each architectural metal finish coating system and color for touch up.

1.4 QUALITY ASSURANCE

A. Installer Qualifications:

1. Experience: Installer's personnel with not less than 5 years of experience in the successful performance of Work similar to scope of this Project.
2. Supervision: Installer shall maintain a competent supervisor at Project while the Work is in progress, and who has not less than 5 years of experience installing products and systems similar to scope of this Project.
3. Manufacturer Acceptance: Installer shall be certified, approved, licensed, or acceptable to manufacturer to install products.

a. Subcontractor Responsibility: Work included in this Technical Section shall be performed by a qualified single subcontractor solely responsible for engineering, fabrication and installation of the Work.

B. Welding Qualifications: Qualify procedures and personnel according to AWS qualification requirements and the following:

1. AWS D1.1/D1.1M, "Structural Welding Code - Steel".
2. AWS D1.2/D1.2M, "Structural Welding Code - Aluminum".

C. Energy Performance Standards: Comply with NFRC for minimum standards of energy performance, materials, components, accessories, and fabrication. Comply with more stringent requirements if indicated.

1. Provide NFRC-certified glazed aluminum curtain walls with an attached label.

D. Accessible Entrances for Aluminum Entrance Doors: Comply with applicable provisions in the U.S. Architectural & Transportation Barriers Compliance Board's ADA-ABA Accessibility Guidelines and ICC/ANSI A117.1.

E. Structural-Sealant Glazing: Comply with ASTM C 1401 "Guide for Structural Sealant Glazing" for design and installation of glazed aluminum wall systems utilizing structural-sealant glazing.

1. Structural-Sealant Joints: Design reviewed and approved by structural-sealant manufacturer.
2. Comply with ASTM C 1135 Standard Test Method for Determining Tensile Adhesion Properties of Structural Sealants.

F. Preconstruction Testing Service: Provide glazed aluminum curtain walls that comply with test-performance requirements indicated, as evidenced by reports based on Project-specific preconstruction testing by a qualified testing agency.

1. Refer to Division 01 Section "Testing Mock-up For Building Enclosure Systems".

G. Preconstruction Sealant Testing: Perform sealant manufacturer's standard tests for compatibility with and adhesion of each material that will come in contact with sealants and each condition.

1. Test a minimum five production-run samples each of metal, glazing, and other material.
2. Prepare samples using techniques and primers required for installed assemblies.
3. Perform tests under environmental conditions that duplicate those under which assemblies will be installed.
4. For materials that fail tests, determine corrective measures necessary to prepare each material to ensure compatibility with and adhesion of sealants including, but not limited to, specially formulated primers. After performing these corrective measures on the minimum number of samples required for each material, retest materials.

H. Mock-ups: Prior to fabrication and installation, build mock-up for each form of construction and finish required to verify selections made under sample Submittals and to demonstrate aesthetic effects and qualities of materials and execution. Build mock-up using materials indicated for the completed Work.

1. Build mock-up in the location and of the size indicated or, if not indicated, as directed by Architect. Contractor shall provide structural support framework.

    a. Show typical components, attachments to building structure, and requirements of installation.

2. Notify Architect seven days in advance of the dates and times when mock-up will be installed.
3. Obtain Architect's acceptance of mock-ups before starting fabrication or installation.
4. Acceptance of mock-ups does not constitute acceptance of deviations from the Contract Documents contained in mock-ups unless such deviations are specifically noted by Contractor and accepted by Architect in writing.
5. Demolish and remove mock-ups when directed by Architect unless accepted to become part of the completed Work.

1.5 PRE-INSTALLATION CONFERENCE

A. Pre-Installation Conference: Before Work begins, conduct conference at Project site.

1. Participants:

    a. Architect.
    b. Contractor, including superintendent.
    c. Installer, including project manager and supervisor.
    d. If requested, Manufacturer's qualified technical representative.
    e. Installers of other construction interfaced with Work.

2. Minimum Agenda: Installer shall demonstrate understanding of the Work required by describing detailed procedures for preparing, installing, and cleaning the Work. Demonstration shall include, but not be limited to, following topics:

    a. Tour representative areas of Work, inspect and discuss condition of substrate, and other preparatory work performed by other trades.
    b. Review Contract Document requirements.
    c. Review approved submittals.
    d. Review inspection and testing requirements.
    e. Review environmental conditions and procedures for coping with unfavorable conditions.
    f. Resolve deviations or differences between Contract Documents and the manufacturer's specifications.

3. Record discussions, including decisions and agreements, and prepare report.

1.6 PROJECT CONDITIONS

A. Field Measurements: Where products and systems are indicated to fit walls and other construction, verify dimensions by field measurements before fabrication.

1.7 COORDINATION

A. Coordinate installation of products and systems with interfacing and adjoining construction to provide a successful installation without failure.

1.8 WARRANTY

A. Manufacturer's Warranty: Furnish manufacturer's written material and labor warranty signed by an authorized representative using manufacturer's standard form agreeing to furnish materials and labor required to repair or replace work which exhibits material defects caused by manufacture or design and installation of product. "Defects" is defined to include but not limited to deterioration or failure to perform as required.

1. Failures include, but are not limited to, the following:

    a. Structural failures including, but not limited to, excessive deflection.
    b. Noise or vibration created by wind and thermal and structural movements.
    c. Deterioration of metals and other materials beyond normal weathering.
    d. Water penetration through fixed glazing and framing areas.
    e. Failure of operating components.

2. Warranty Period: Manufacturer shall warrant the products to be free from material and labor Defects for a period of 5 years from date of Substantial Completion

B. Installer's Warranty: Furnish installer's written workmanship warranty signed by an authorized representative using installer's standard form agreeing to provide labor required to repair or replace work which exhibits workmanship defects. "Defects" is defined to include but not limited to deterioration or failure to perform as required.

1. Warranty Period: Installer shall warrant the installation to be free from workmanship Defects for a period of 2 years from date of Substantial Completion.

C. Factory Applied Finish Warranty for Anodic Finishes: Furnish manufacturer's written warranty signed by an authorized representative using manufacturer's standard form agreeing to repair finish or replace work which exhibits finish defects. "Defects" is defined to include but not limited to deterioration or failure of finish to perform as required.

1. Warranty Period: Manufacturer shall warrant the installation to be free from finish defects for a period of 20 years from date of Substantial Completion.

PART 2 - PRODUCTS

2.1 MANUFACTURERS AND PRODUCTS

A. Acceptable Manufacturers: Subject to compliance with requirements of Contract Documents as judged by the Architect, provide product by one of manufacturers listed. If not listed, submit as substitution according to the Conditions of the Contract and Division 01 Section "Substitution Procedures".

1. Baker Metal Products Inc.
2. Bruce Wall Systems Corporation.
3. C.R. Laurence - US Aluminum.
4. EFCO Corporation, a Pella Company.
5. Harmon Inc.
6. Kawneer North America; an Alcoa Company.
7. Oldcastle BuildingEnvelope.
8. YKK AP America Inc.

B. Basis of Design (Product Standard): Contract Documents are based on products and systems specified to establish a standard of quality. Other manufacturers offering products having equivalent characteristics may be considered, provided deviations are minor and comply with requirements of Contract Documents as judged by the Architect.

1. Curtain Wall System; Captured Glazing: Kawneer 1600 Wall.
2. Window Wall System; Captured Glazing: Kawneer 2250 IG.
3. Standard-Duty Aluminum Entrance Door System; Medium Stile: Kawneer 350 IR Entrances.

2.2 MATERIALS, GENERAL

A. Single Source Responsibility: Furnish each type of product from single manufacturer. Provide secondary materials only as recommended by manufacturer of primary materials.

2.3 PERFORMANCE REQUIREMENTS

A. General Performance: Engineer products and systems to withstand loads within limits of allowable working stresses of the materials involved under conditions indicated and without permanent deformation or failure of materials.

B. Design Loads: Engineer to withstand design loads including but not limited to gravity, wind, seismic, and erection design loads and thermal movements established by authorities having jurisdiction, applicable local building codes, and as indicated.

1. Structural Movement: Engineer to withstand movements of structure including, but not limited to: drift, twist, column shortening, long-term creep and deflection from uniformly distributed and concentrated live loads.

    a. Live Load Deflection: System shall accommodate plus or minus 3/8 in (10 mm) differential vertical deflection of floors.

C. Structural Test Performance: Test according to ASTM E 330 as follows:

1. When tested at positive and negative wind-load design pressures, assemblies do not evidence deflection exceeding specified limits.
2. When tested at 150 percent of positive and negative wind-load design pressures, assemblies, including anchorage, do not evidence material failures, structural distress, and permanent deformation of main framing members exceeding 0.2 percent of span.
3. Test Durations: As required by design wind velocity, but not less than 10 seconds.

D. Deflection of Framing Members:

1. Deflection Normal to Glazing Plane: Limited to 1/175 of clear span for spans up to 13 ft 6 in (4050 mm) and to 1/240 of clear span plus 1/4 in (6 mm) for spans more than 13 ft 6 in (4050 mm) or 1 in (25 mm), whichever is less.

    a. Exceptions:

        1) Net deflection of spans with one glass lite more than 120 in (3000 mm) in height limited to not more than 3/4 in (18.75 mm) regardless of overall span.
        2) Where a sealant joint occurs between a framing member and a relatively stiff building element, framing member deflection not more than 1/2 of nominal joint width, or less if required by sealant manufacturer.

    b. Span is defined as the distance between anchor centerline.

2. Deflection Parallel to Glazing Plane: Limited to amount not exceeding that which reduces glazing bite to less than 75 percent of design dimension and that which reduces edge clearance between framing members and glazing or other fixed components to less than 1/8 in (3 mm).

    a. Operable Units (Doors or Windows): Provide a minimum 1/16 in (1.6 mm) clearance between framing members and operable units.

3. Cantilever Deflection: Where framing members overhang an anchor point, limit deflection to two times the length of cantilevered member, divided by 175.
4. Window Sill Extension Deflection: The center deflection of the window sill extension trim, when subjected to a 250 pound (113 Kg) vertical concentrated load, shall not exceed 1/4 in (6 mm). No permanent deformation is allowed when load is removed.
5. Gypsum Board Deflection: Deflection of framing members in a direction normal to wall plane is limited to 1/360 of clear span, 3/4 in (19 mm) maximum, where gypsum board surfaces are subject to bending.

E. Building Maintenance Equipment: Engineer units supporting building maintenance equipment to resist pull-out and horizontal shear forces transmitted from equipment.

F. Seismic Performance: Withstand the effects of earthquake motions.

G. Water Penetration under Static Pressure for Curtain Wall and Window Wall Systems: No evidence of water penetration through fixed glazing and framing areas when tested according to ASTM E 331 at a minimum static-air-pressure differential of 20 percent of positive wind-load design pressure, but not less than 15 lbf/sf.

H. Water Penetration under Dynamic Pressure for Curtain Wall and Window Wall Systems: No evidence of water penetration through fixed glazing and framing areas when tested according to AAMA 501.1 at dynamic pressure equal to 20 percent of positive wind-load design pressure, but not less than 15 lbf/sf.

1. Maximum Water Leakage: No uncontrolled water penetrating assemblies or water appearing on assemblies' normally exposed interior surfaces from sources other than condensation. Water leakage does not include water controlled by flashing and gutters that is drained to exterior.

I. Thermal Movements: Engineer products and systems to accommodate thermal movements of supporting elements resulting from the following maximum change (range) in ambient and surface temperatures without buckling, damaging stresses, damaging loads on fasteners, failure of operating units to function properly, and other detrimental effects.

1. Temperature Change (Range): 120 deg F (49 deg C), ambient; 180 deg F (82 deg C), material surfaces.

J. Energy Performance: Glazed aluminum curtain wall systems shall have certified and labeled energy performance ratings in accordance with NFRC.

1. Curtainwall and Storefront Glazing Air Infiltration: Maximum air leakage through fixed glazing and framing areas of 0.06 cfm/sf (0.30 L/s/sm) of fixed wall area as determined according to ASTM E 283 at a minimum static-air-pressure differential of 6.24 lbf/sf (300 Pa).
2. Exterior Entrance Door Air Infiltration: Maximum air leakage through glazed entrance doors of 1.0 cfm/sq. ft. (5.08 L/s per sq. m) as determined according to ASTM E 283 at a minimum static-air-pressure differential of 1.57 lbf/sq. ft. (75 Pa) .
3. Condensation Resistance: Fixed glazing and framing system shall have thermal break construction and NFRC-certified condensation resistance rating determined according to NFRC 500.

    a. AAMA Condensation Resistance (CRF): In addition to condensation resistance rating determined according to NFRC 500, provide glazed aluminum wall system with thermally improved construction that has been tested in accordance with AAMA 1503 and certified by the manufacturer to provide a condensation resistance factor (CRF) of not less than 55.

K. Dimensional Tolerances: Engineer products and systems to accommodate dimensional tolerances of framing members and adjacent construction.

2.4 MATERIALS

A. Aluminum: Alloy and temper recommended by manufacturer for type of use and finish indicated.

1. Sheet and Plate: ASTM B 209 / B 209M.
2. Extruded Bars, Rods, Profiles, and Tubes: ASTM B 221 / B 221M.
3. Extruded Structural Pipe and Tubes: ASTM B 429 / B 429M.
4. Structural Profiles: ASTM B 308 / B 308M.
5. Welding Rods and Bare Electrodes: AWS A5.10/A5.10M.

B. Steel Internal Reinforcement: Shapes and sizes to suit installation meeting delegated engineered performance requirements, as indicated on Shop Drawings.

1. Structural Shapes, Plates, and Bars: ASTM A 36 / A 36M.
2. Cold-Rolled Sheet and Strip: ASTM A 1008 / A 1008M.
3. Hot-Rolled Sheet and Strip: ASTM A 1011 / A 1011M.
4. Primer: Manufacturer's standard zinc-rich, corrosion-resistant primer, complying with SSPC-PS Guide No. 12.00; applied immediately after surface preparation and pretreatment. Select surface preparation methods according to recommendations in SSPC-SP COM and prepare surfaces according to applicable SSPC standard.

2.5 FRAMING SYSTEM

A. Framing Members: Manufacturer's standard formed- or extruded-aluminum framing members of thickness required and reinforced as required to support imposed loads.

1. Fabrication Method: Factory-fabricated unitized system.

B. Brackets and Reinforcements: Manufacturer's standard high-strength aluminum with non-staining, nonferrous shims for aligning system components.

C. Fasteners and Accessories: Manufacturer's standard corrosion-resistant, non-staining, non-bleeding fasteners and accessories compatible with adjacent materials.

1. Use Series 300 Stainless Steel fasteners for joining framing members and fasteners located in wet areas.
2. Use self-locking devices where fasteners are subject to loosening or turning out from thermal and structural movements, wind loads, or vibration.
3. Reinforce members as required to receive fastener threads.
4. Use exposed fasteners with countersunk Phillips screw heads, finished to match framing system.
5. Window Wall and Storefront: Furnish heavy duty aluminum sill pan with integral welded end dams, typical.

D. Anchors: Three-way adjustable anchors that accommodate fabrication and installation tolerances in material and finish and are compatible with adjoining materials and recommended by manufacturer.

1. Concrete and Masonry Inserts: Hot-dip galvanized cast-iron, malleable-iron, or steel inserts complying with ASTM A 123 / A 123M or ASTM A 153 / A 153M requirements.

E. Concealed Flashing: Dead-soft, 0.018 in (0.45 mm) thick stainless steel, ASTM A 240 / A 240M of type recommended by manufacturer.

F. Framing System Gaskets and Sealants: Refer to Division 08 Section “Glazing.

1. EPDM Gaskets: EPDM shall be isolated from direct contact with silicone; including but not limited to the secondary perimeter silicone seal of insulating glass units.

2.6 GLAZING

A. Glazing: Provide glass of types and thicknesses indicated. Fabricate glass to sizes required for openings indicated with edge clearances and tolerances complying with manufacturer's recommendations. Comply with Division 08 Section "Glazing".

B. Glazing Gaskets, Spacers, Setting Blocks, Sealant Backings, and Bond Breakers: Manufacturer's standard permanent, non-migrating types compatible with sealants and suitable for joint movement and assembly performance requirements. Comply with Division 08 Section "Glazing".

1. Silicone Sealant Compatibility: When in direct contact with silicone sealants, gaskets, spacers and setting blocks shall be heat cured silicone rubber based material which is chemically compatible and with sufficient hardness for the purpose intended and approved in writing by the glazing and curtain wall manufacturers.

C. Glazing Sealants: As recommended by manufacturer for joint type.

1. Weatherseal Sealant: ASTM C 920 for Type S, Grade NS, Class 50, neutral-curing silicone formulation compatible with system components with which it comes in contact; and recommended by weatherseal-sealant and curtain-wall manufacturers for this use.

a. Joint Movement Capability: Accommodates a 50 percent increase or decrease in joint width at time of application when measured according to ASTM C 719.
b. Color: Black, unless otherwise indicated.

2. Bond-Breaker Tape: Manufacturer's standard tetrafluoroethylene-fluorocarbon or polyethylene material to which sealants will not develop adhesion.

2.7 ALUMINUM ENTRANCE DOOR SYSTEMS

A. Heavy-Duty Aluminum Entrance Doors: Manufacturer's heavy-duty manual-swing operation entrance door system designed to coordinate with glazed aluminum wall framing system.

1. Door Construction: 2 in (50.8 mm) overall thickness, with minimum 0.188 in (3.2 mm) thick, extruded-aluminum tubular rail and stile members. Mechanically fasten corners with reinforcing brackets that are deeply penetrated and fillet welded.
2. Door Design: Medium stile; 3-1/2 in (87 mm) nominal width at vertical stiles.

a. Accessible Doors: Smooth surfaced for width of door in area within 10 in (250 mm) above floor or ground plane.

3. Glazing Stops and Gaskets: Square, snap-on, extruded-aluminum stops and preformed gaskets. Provide non-removable glazing stops on outside of door.
4. Door Hardware:

a. Thresholds: BHMA A156.21, raised thresholds beveled with a slope of not more than 1:2, with maximum height of 1/2 in (12 mm). Provide cutouts coordinated for operating hardware, with anchors and jamb clips.

b. Weather Sweeps: Manufacturer's standard exterior-door bottom sweep with concealed fasteners on mounting strip.
c. Balance of Door Hardware: As specified in Division 08 Section "Door Hardware".

2.8 ACCESSORY MATERIALS

A. Joint Sealants: For installation at perimeter of glazed aluminum framing systems, as specified in Division 07 Section "Joint Sealants".

B. Bituminous Paint: Cold-applied asphalt-mastic paint complying with SSPC-Paint 12 requirements except containing no asbestos, formulated for 30 mils (0.762 mm) thickness per coat.

C. Maintenance Equipment Anchors: As specified in Division 11 Section ""Building Maintenance Equipment"".

D. Cleaning Agent and Cloth: As recommended by structural-sealant manufacturer.

E. Linings, Spacers and Sleeves: At dynamic or moving joints, provide type and materials recommended by manufacturer.

2.9 FABRICATION

A. Form or extrude aluminum shapes before finishing.

B. Weld in concealed locations to greatest extent possible to minimize distortion or discoloration of finish. Welds shall be of adequate strength and durability, with jointing tight, flush, smooth and clean. Weld behind finished surfaces so as to cause no distortion and/or discoloration on the finished side. Remove weld spatter and welding oxides from exposed surfaces by descaling or grinding.

C. Fabricate components that, when assembled, have the following characteristics:

1. Profiles that is sharp, straight, and free of defects or deformations.
2. Accurately fitted joints with ends coped or mitered.
3. Physical and thermal isolation of glazing from framing members.
4. Accommodations for thermal and mechanical movements of glazing and framing to maintain required glazing edge clearances.
5. Provisions for field replacement of glazing. Provide minimum clearances and depth of glazing packets as recommended by glass manufacturer for thickness and type of glass indicated.

    a. Structural-Sealant-Glazed Framing Members: Include accommodations for using temporary support device to retain glazing in place while structural-sealant cures.

6. Fasteners, anchors, and connection devices that are concealed from view.
7. Internal guttering systems or other means to drain water passing joints, condensation occurring within framing members, and moisture migrating within glazed aluminum framing systems to exterior.

D. Mechanically Glazed Framing Members: Fabricate for flush glazing without projecting stops.

E. For Factory-Assembled and Glazed Frame Units:

1. Rigidly secure non-movement joints.
2. Seal joints watertight unless otherwise indicated.
3. Factory-install glazing to comply with requirements in Division 08 Section "Glazing".
4. Structural-Sealant Units: Prepare surfaces that will contact structural-sealant according to sealant manufacturer's written instructions to ensure compatibility and adhesion. Preparation includes, but is not limited to, cleaning and priming surfaces.

F. Aluminum Entrance Door Frames: Reinforce as required to support loads imposed by door operation and for installing entrance door hardware.

1. At exterior doors, provide compression weather stripping at fixed stops.
2. At interior doors, provide silencers at stops to prevent metal-to-metal contact. Install three silencers on strike jamb of single-door frames and two silencers on head of frames for pairs of doors.

G. Aluminum Entrance Doors: Reinforce doors as required for installing entrance door hardware.

1. At pairs of exterior doors, provide sliding-type weather stripping retained in adjustable strip and mortised into door edge.
2. At exterior doors, provide weather sweeps applied to door bottoms.

H. Aluminum Entrance Door Hardware Installation: Factory-install entrance door hardware to the greatest extent possible. Cut, drill, and tap for factory-installed entrance door hardware before applying finishes.

I. After fabrication, clearly mark components to identify their locations in Project according to Shop Drawings.

2.10 FINISHES, GENERAL

A. Comply with NAAMM's "Metal Finishes Manual for Architectural and Metal Products" for recommendations for applying and designating finishes.

B. Protect mechanical finishes on exposed surfaces from damage by applying a strippable, temporary protective covering before shipping.

C. Concealed members may be mill finish, providing that they cannot be seen through the glass, do not contact any structural silicone or are not continually exposed to water immersion.

D. Appearance of Finished Work: Variations in appearance of abutting or adjacent pieces are acceptable if they are within one-half of the range of accepted Samples. Noticeable variations in the same piece are not acceptable. Variations in appearance of other components are acceptable if they are within the range of accepted Samples and are assembled or installed to minimize contrast.

2.11 ALUMINUM FINISHES

A. Finish designations prefixed by "AA" conform to the system established by the Aluminum Association for designating aluminum finishes.

1. Selections: As scheduled or as indicated in Design Selections.

B. High-Performance Organic Finish: Prepare, pretreat, and apply coating to exposed metal surfaces to comply with coating and resin manufacturers' written instructions. Provide dry film thickness, primers, color coats and clear coats required to comply with performance requirements and warranty periods indicated.

1. PVDF Fluoropolymer Finish: Fluoropolymer finish complying with AAMA 2605 and containing not less than 70 percent PVDF resin by weight in color coat.
2. FEVE Fluoropolymer Finish: Fluoropolymer finish complying with AAMA 2605 and containing 100 percent fluorinated ethylene vinyl ether (FEVE) resin in color coat.

PART 3 - EXECUTION

3.1 EXAMINATION

A. Acceptance of Surfaces and Conditions: Examine substrates to receive products and systems and associated work for compliance with requirements and other conditions affecting performance. Proceed only when unsatisfactory conditions have been corrected in a manner complying with Contract Documents. Starting work within a particular area will be construed as acceptance of surface conditions.

3.2 INSTALLATION, GENERAL

A. Installation Quality Standards: In addition to standards listed elsewhere, perform Work according to following, unless otherwise specified:

1. Respective manufacturer’s written installation instructions.
2. Accepted submittals.
3. Contract Documents.

B. Control of Corrosion: Prevent galvanic action and other forms of corrosion by isolating metals and other materials from direct contact with incompatible materials.

1. Where aluminum will contact dissimilar metals, protect against galvanic action by painting contact surfaces with primer, applying sealant or tape, or installing nonconductive spacers as recommended by manufacturer for this purpose.
2. Where aluminum will contact concrete or masonry, protect against corrosion by painting contact surfaces with bituminous paint.

3.3 PREPARATION

A. General: Comply with manufacturer's instructions, recommendations, and specifications for cleaning and surface preparation. Surfaces shall have no defects, contaminants, or errors which would result in poor or potentially defective installation or would cause latent defects in Work.

1. Furnish inserts for setting in concrete forming, and similar work required to support glazed aluminum wall system.
2. Field measure and verify governing dimensions, including floor elevations, floor-to-floor heights, minimum clearance between wall system and structural frames and other permissible dimensional tolerances in building frame.

3.4 INSTALLATION OF GLAZED ALUMINUM FRAMING SYSTEMS

A. General:

1. Do not install damaged components.
2. Fit joints between aluminum components to produce hairline joints free of burrs and distortion.
3. Rigidly secure non-movement joints.
4. Install anchors with separators and isolators to prevent impediments to movement of joints.
5. Do not cut, trim, weld or braze component parts during erection, in any manner which would damage finish, decrease strength or result in visual imperfection or failure in performance of construction.
6. Weld components in concealed locations to minimize distortion or discoloration of finish. Protect glazing surfaces from welding.
7. Seal joints within glazed aluminum framing system according to sealant manufacturer's written instructions to produce weatherproof joints. Install joint filler behind sealant as recommended by sealant manufacturer.

B. Install components to drain water passing joints, condensation occurring within framing members, and moisture migrating within glazed aluminum framing systems to exterior.

C. Set continuous sill members and flashing in full sealant bed and install perimeter joint sealants as specified in Division 07 Section "Joint Sealants" to produce weathertight installation.

D. Install components plumb and true in alignment with established lines and grades, and without warp or rack. Secure to structure with non-staining and non-corrosive shims, anchors, fasteners, spacers and fillers. Maintain minimum clearance of 1 in (25 mm) between inside face of framing system and outside face of building structure.

E. Aluminum Entrance Doors: Install doors to produce smooth operation and tight fit at contact points.

1. Exterior Doors: Install to produce weathertight enclosure and tight fit at weather stripping.

2. Field-Installed Entrance Door Hardware: Install surface-mounted entrance door hardware according to entrance door hardware manufacturers' written instructions using concealed fasteners to greatest extent possible.

F. Install glazing as specified in Division 08 Section "Glazing".

3.5 ERECTION TOLERANCES

A. Erection Tolerances: Install to comply with the following non-accumulating maximum erection tolerances:

1. Plumb: 1/8 in per 10 ft (3 mm per 3 m); 1/4 in per 40 ft (6 mm per 12 m).
2. Level: 1/8 in per 10 ft (3 mm per 3 m); 1/4 in per 40 ft (6 mm per 12 m).
3. Alignment:

    a. Where surfaces abut in line or are separated by reveal or protruding element up to 1/2 in (12 mm) wide, limit offset from true alignment to 1/16 in (1.5 mm).
    b. Where surfaces are separated by reveal or protruding element from 1/2 to 1 in (12 to 25 mm) wide, limit offset from true alignment to 1/8 in (3 mm).
    c. Where surfaces are separated by reveal or protruding element of 1 in (25 mm) wide or more, limit offset from true alignment to 1/4 in (6 mm).

4. Location and Plane: Limit variation from plane to 1/8 in per 12 ft (3 mm per 3.6 m); 1/2 in (12 mm) over total length.

3.6 FIELD QUALITY CONTROL

A. Manufacturer's Field Service: Manufacturer's qualified technical representative shall periodically inspect Work to ensure installation is proceeding in accordance with manufacturer's designs, recommendations, instructions, and warranty requirements. Representative shall submit written reports of each visit indicating observations, findings, and conclusions of inspection.

1. Manufacturer's Technical Representative Qualifications: Direct employee of technical services department of manufacturer with experience in providing recommendations, observations, evaluations, and problem diagnostics.

B. Testing Agency: Engage a qualified independent testing agency to perform field quality control. Materials and installation failing to meet specified requirements shall be replaced at Contractor's expense. Retesting of materials and installations failing to meet specified requirements shall be done at Contractor’’s expense.

C. Prepare test and inspection reports.

3.7 ADJUSTING OF ALUMINUM ENTRANCE DOORS

A. Adjust operating entrance door hardware to function smoothly as recommended by manufacturer.

1. For entrance doors accessible to people with disabilities, adjust closers to provide a 3-second closer sweep period for doors to move from a 70-degree open position to 3 in (75 mm) from the latch, measured to the leading door edge.

3.8 **ARCHITECTURAL METAL FINISH SCHEDULE:** Refer to Exterior Elevation drawings.

END OF SECTION

SECTION 08 5619

SLIDING PASS WINDOWS

PART 1 - GENERAL

1.1 SUMMARY

A. Section includes sliding pass windows and supplementary items necessary to complete work required for their installation.

B. Related Section:

1. Division 08 Section "Overhead Coiling Doors" for roll down fire-rated counter shutters for use with non-fire-rated sliding pass windows located at fire-rated partitions.

1.2 ACTION SUBMITTALS

A. Product Data: Manufacturer's technical literature for each product and system indicated.

1. Include manufacturer's specifications for materials, finishes, construction details, installation instructions, and recommendations for maintenance.

B. Shop Drawings: Show details of fabrication and installation, including plans, elevations, sections, details of components and attachments to other work. Distinguish between shop and field-assembled work.

1.3 INFORMATIONAL SUBMITTALS

A. Product Approvals: Submit Florida Product Approval or Product Control Notice of Acceptance (NOA) issued by Miami-Dade County Building Code Compliance Office (BCCO) or other product approval acceptable to authorities having jurisdiction for systems used at exterior of building.

B. Qualification Data:

1. For firms and persons specified in "Quality Assurance" to demonstrate their capabilities and experience. Include list of completed projects.

1.4 QUALITY ASSURANCE

A. Manufacturer Qualifications: Manufacturer with not less than 5 years of experience in the successful production and in-service performance of products and systems similar to scope of this Project.

1.5 PROJECT CONDITIONS

A. Field Measurements: Where products and systems are indicated to fit walls and other construction, verify dimensions by field measurements before fabrication.

1.6 COORDINATION

A. Coordinate installation of products and systems with interfacing and adjoining construction to provide a successful installation without failure.

PART 2 - PRODUCTS

2.1 MANUFACTURERS AND PRODUCTS

A. Acceptable Manufacturers and Products: Subject to compliance with requirements of Contract Documents as judged by the Architect, provide product by one of manufacturers listed. If not listed, submit as substitution according to the Conditions of the Contract and Division 01 Section "Substitution Procedures".

B. Basis of Design (Product Standard): Contract Documents are based on products and systems specified to establish a standard of quality. Other manufacturers/fabricators offering products having equivalent characteristics may be considered, provided deviations are minor and comply with requirements of Contract Documents as judged by the Architect.

2.2 MATERIALS, GENERAL

A. Single Source Responsibility: Furnish each type of product from single manufacturer. Provide secondary materials only as recommended by manufacturer of primary materials.

B. Windborne-Debris-Impact-Resistance Performance: Comply with impact resistance testing requirements for Wind Zone.

2.3 NON-FIRE RATED HORIZONTAL FRAMELESS SLIDING WINDOW (TYPE SW-1)

A. Configuration: Two 1/4 in (6 mm) operable window panes with top and bottom tracks. Recess tracks unless indicated otherwise.

B. Basis of Design (Product Standard): EPCO; Packaged Glass Door Track Assemblies, Assembly #16; Size(s) as indicated on drawings.

1. Clear anodized aluminum frame finish.
2. Manufacturer's standard ratchet lock with bright chrome finish.

    a. EPCO Part No. G04-C; include side jambs at both sides (Part No. 730)

3. 1/4 in (6 mm) thick, clear tempered glass windows.

C. Manufacturers:

1. EPCO
2. Hafele
3. Knape & Vogt

2.4 NON-FIRE-RATED HORIZONTAL FRAMED SLIDING WINDOW (TYPE SW-2)

A. Two Sliding Panes: Two 1/4 in (6 mm) operable window panes, top hung on nylon guides with frames top and sides; no sill:

1. Manufacturer and Product: Nissen & Co., Inc.; Sliding Serving Windows, Series BP; Size(s) as indicated on drawings.

    a. Clear anodized aluminum frame finish.
    b. Manufacturer's standard pin screw lock.
    c. 1/4 in (6 mm) thick, clear tempered glass windows.

B. One Sliding Pane; One Fixed Pane: Two 1/4 in (6 mm) window panes (one operable; one fixed), top hung on nylon guides with frames top and sides; no sill:

1. Manufacturer and Product: Nissen & Co., Inc.; Sliding Serving Windows, Series E; Size(s) as indicated on drawings.

    a. Clear anodized aluminum frame finish.
    b. Manufacturer's standard pin screw lock.
    c. 1/4 in (6 mm) thick, clear tempered glass windows.

2.5 FIRE-RATED HORIZONTAL FRAMED SLIDING WINDOW, (TYPE SW-3)

A. Manufacturer and Product: Nissen & Co., Inc.; Steel Sliding Fire Windows; Size(s) as indicated.

1. Steel: Frame and sash shall be fabricated of 16-gage cold rolled steel, conforming with ASTM A366
2. Weatherstripping: Sliding slash panel shall be fully weatherstripped with silicone treated wool pile or equivalent and vinyl.
3. Finish: As selected from manufacturers standard finishes.
4. Glazing: Factory glazed with clear 1/4 in (6 mm) thick wire glass. Wire to be minimum of 24 gage with maximum opening of one square inch and comply per UL requirements. Glass to comply with ANSI Z97.1 and ASTM C1036.
5. Hardware: Sliding panels shall be furnished with a positive latching 1/8 in (3 mm) thick steel latch, attached to the bottom rail; engaging on a 1/4 in (6 mm) thick keeper that is surface mounted to the sill member.

    a. Self-Closing Latch: Provide a spring actuated automatic closing device used in conjunction with a 160-degree fusible link assembly mounted on the unit.

PART 3 - EXECUTION

3.1 EXAMINATION

A. Acceptance of Surfaces and Conditions: Examine substrates to receive products and systems and associated work for compliance with requirements and other conditions affecting performance. Proceed only when unsatisfactory conditions have been corrected in a manner complying with Contract Documents. Starting work within a particular area will be construed as acceptance of surface conditions.

3.2 INSTALLATION

A. Installation Quality Standards: In addition to standards listed elsewhere, perform Work according to following, unless otherwise specified:

1. Respective manufacturer/fabricator's written installation instructions.

2. Accepted submittals.
3. Contract Documents.

B. Control of Corrosion: Prevent galvanic action and other forms of corrosion by isolating metals and other materials from direct contact with incompatible materials.

C. Preparation, General: Comply with manufacturer's instructions, recommendations, and specifications for cleaning and surface preparation. Surfaces shall have no defects, contaminants, or errors which would result in poor or potentially defective installation or would cause latent defects in Work.

END OF SECTION

SECTION 08 71 00

DOOR HARDWARE

PART 1 - GENERAL

1.01 RELATED DOCUMENTS

A. Drawings and general provisions of the Contract, including General and Supplementary Conditions and Division 01 Specification Sections, apply to this Section.

1.02 SUMMARY

A. Section includes:

1. Mechanical and electrified door hardware for:

   a. Swinging doors.
   b. Sliding doors.
   c. Gates.

2. Electronic access control system components, including:

   a. Biometric access control reader.
   b. Electronic access control devices.

3. Field verification, preparation and modification of existing doors and frames to receive new door hardware.
4. Lead-lining door hardware items required for radiation protection at door openings.
5. The intent of the hardware specification is to specify the hardware for interior and exterior doors, and to establish a type, continuity, and standard of quality. However, it is the door hardware supplier's responsibility to thoroughly review existing conditions, schedules, specifications, drawings, and other Contract Documents to verify the suitability of the hardware specified.

B. Exclusions: Unless specifically listed in hardware sets, hardware is not specified in this section for:

1. Windows
2. Cabinets (casework), including locks in cabinets
3. Signage

4. Toilet accessories
5. Overhead doors

C. Related Sections:

1. Division 01 Section “Alternates” for alternates affecting this section.
2. Division 07 Section “Joint Sealants” for sealant requirements applicable to threshold installation specified in this section.
3. Division 09 sections for touchup, finishing or refinishing of existing openings modified by this section.
4. Division 13 Section “Radiation Protection” for requirements for lead-lining for door hardware at openings indicated to receive radiation protection.
5. Division 26 sections for connections to electrical power system and for low-voltage wiring.
6. Division 28 sections for coordination with other components of electronic access control system.

1.03 **REFERENCES**

A. UL - Underwriters Laboratories

1. UL 10B - Fire Test of Door Assemblies
2. UL 10C - Positive Pressure Test of Fire Door Assemblies
3. UL 1784 - Air Leakage Tests of Door Assemblies
4. UL 305 - Panic Hardware

B. DHI - Door and Hardware Institute

1. Sequence and Format for the Hardware Schedule
2. Recommended Locations for Builders Hardware
3. Key Systems and Nomenclature

C. ANSI - American National Standards Institute

1. ANSI/BHMA A156.1 - A156.29, and ANSI/BHMA A156.31 - Standards for Hardware and Specialties

1.04 **SUBMITTALS**

A. General:

1. Submit in accordance with Conditions of Contract and Division 01 requirements.
2. Highlight, encircle, or otherwise specifically identify on submittals deviations from Contract Documents, issues of incompatibility or other issues which may detrimentally affect the Work.
3. Prior to forwarding submittal, comply with procedures for verifying existing door and frame compatibility for new hardware, as specified in PART 3, “EXAMINATION” article, herein.

B. Action Submittals:

1. Product Data: Technical product data for each item of door hardware, installation instructions, maintenance of operating parts and finish, and other information necessary to show compliance with requirements.
2. Riser and Wiring Diagrams: After final approval of hardware schedule, submit details of electrified door hardware, indicating:

    a. Wiring Diagrams: For power, signal, and control wiring and including:
        1) Details of interface of electrified door hardware and building safety and security systems.
        2) Schematic diagram of systems that interface with electrified door hardware.
        3) Point-to-point wiring.
        4) Risers.

3. Samples for Verification: If requested by Architect, submit production sample or sample installations of each type of exposed hardware unit in finish indicated, and tagged with full description for coordination with schedule.

    a. Samples will be returned to supplier. Units that are acceptable to Architect may, after final check of operations, be incorporated into Work, within limitations of key coordination requirements.

4. Door Hardware Schedule: Submit schedule with hardware sets in vertical format as illustrated by Sequence of Format for the Hardware Schedule as published by the Door and Hardware Institute. Indicate complete designations of each item required for each door or opening, include:

    a. Door Index; include door number, heading number, and Architects hardware set number.
    b. Opening Lock Function Spreadsheet: List locking device and function for each opening.
    c. Quantity, type, style, function, size, and finish of each hardware item.
    d. Name and manufacturer of each item.
    e. Fastenings and other pertinent information.
    f. Location of each hardware set cross-referenced to indications on Drawings.
    g. Explanation of all abbreviations, symbols, and codes contained in schedule.
    h. Mounting locations for hardware.
    i. Door and frame sizes and materials.
    j. Name and phone number for local manufacturer's representative for each product.
    k. Operational Description of openings with any electrified hardware (locks, exits, electromagnetic locks, electric strikes, automatic operators, door position switches, magnetic holders or closer/holder units, and access control components). Operational description should include operational descriptions for: egress, ingress (access), and fire/smoke alarm connections.
        1) Submittal Sequence: Submit door hardware schedule concurrent with submissions of Product Data, Samples, and Shop Drawings. Coordinate submission of door hardware schedule with scheduling requirements of other work to facilitate fabrication of other work that is critical in Project construction schedule.

5. Key Schedule:

    a. After Keying Conference, provide keying schedule listing levels of keying as well as explanation of key system's function, key symbols used and door numbers controlled.
    b. Use ANSI/BHMA A156.28 “Recommended Practices for Keying Systems” as guideline for nomenclature, definitions, and approach for selecting optimal keying system.
    c. Provide 3 copies of keying schedule for review prepared and detailed in accordance with referenced DHI publication. Include schematic keying diagram and index each key to unique door designations.
    d. Index keying schedule by door number, keyset, hardware heading number, cross keying instructions, and special key stamping instructions.
    e. Provide one complete bitting list of key cuts and one key system schematic illustrating system usage and expansion.
        1) Forward bitting list, key cuts and key system schematic directly to Owner, by means as directed by Owner.

    f. Prepare key schedule by or under supervision of supplier, detailing Owner’s final keying instructions for locks.

6. Templates: After final approval of hardware schedule, provide templates for doors, frames and other work specified to be factory or shop prepared for door hardware installation.

C. Informational Submittals:

1. Qualification Data: For Supplier, Installer and Architectural Hardware Consultant.
2. Product data for electrified door hardware:

    a. Certify that door hardware approved for use on types and sizes of labeled fire-rated doors complies with listed fire-rated door assemblies.

3. Certificates of Compliance:

    a. UL listings for fire-rated hardware and installation instructions if requested by Architect or Authority Having Jurisdiction.
    b. Installer Training Meeting Certification: Letter of compliance, signed by Contractor, attesting to completion of installer training meeting specified in “QUALITY ASSURANCE” article, herein.
    c. Electrified Hardware Coordination Conference Certification: Letter of compliance, signed by Contractor, attesting to completion of electrified hardware coordination conference, specified in “QUALITY ASSURANCE” article, herein.

4. Warranty: Special warranty specified in this Section.

D. Closeout Submittals:

1. Operations and Maintenance Data: Provide in accordance with Division 01 and include:

a. Complete information on care, maintenance, and adjustment; data on repair and replacement parts, and information on preservation of finishes.
b. Catalog pages for each product.
c. Factory order acknowledgement numbers (for warranty and service)
d. Name, address, and phone number of local representative for each manufacturer.
e. Parts list for each product.
f. Final approved hardware schedule, edited to reflect conditions as-installed.
g. Final keying schedule
h. Copies of floor plans with keying nomenclature
i. As-installed wiring diagrams for each opening connected to power, both low voltage and 110 volts.
j. Copy of warranties including appropriate reference numbers for manufacturers to identify project.

1.05 QUALITY ASSURANCE

A. Supplier Qualifications and Responsibilities: Recognized architectural hardware supplier with record of successful in-service performance for supplying door hardware similar in quantity, type, and quality to that indicated for this Project and that provides certified Architectural Hardware Consultant (AHC) available to Owner, Architect, and Contractor, at reasonable times during the Work for consultation.

1. Warehousing Facilities: In Project's vicinity.
2. Scheduling Responsibility: Preparation of door hardware and keying schedules.
3. Engineering Responsibility: Preparation of data for electrified door hardware, including Shop Drawings, based on testing and engineering analysis of manufacturer's standard units in assemblies similar to those indicated for this Project.
4. Coordination Responsibility: Assist in coordinating installation of electronic security hardware with Architect and electrical engineers and provide installation and technical data to Architect and other related subcontractors.

    a. Upon completion of electronic security hardware installation, inspect and verify that all components are working properly.

B. Architectural Hardware Consultant Qualifications: Person who is experienced in providing consulting services for door hardware installations that are comparable in material, design, and extent to that indicated for this Project and meets these requirements:

1. For door hardware, DHI-certified, Architectural Hardware Consultant (AHC).
2. Can provide installation and technical data to Architect and other related subcontractors.
3. Can inspect and verify components are in working order upon completion of installation.
4. Capable of producing wiring diagrams.
5. Capable of coordinating installation of electrified hardware with Architect and electrical engineers.

C. Single Source Responsibility: Obtain each type of door hardware from single manufacturer.

D. Fire-Rated Door Openings: Provide door hardware for fire-rated openings that complies with NFPA 80 and requirements of authorities having jurisdiction. Provide only items of door hardware that are listed products tested by Underwriters Laboratories, Intertek Testing Services, or other testing and inspecting organizations acceptable to authorities having jurisdiction for use on types and sizes of doors indicated, based on testing at positive pressure and according to NFPA 252 or UL 10C and in compliance with requirements of fire-rated door and door frame labels.

E. Electrified Door Hardware: Listed and labeled as defined in NFPA 70, Article 100, by testing agency acceptable to authorities having jurisdiction.

F. Accessibility Requirements: For door hardware on doors in an accessible route, comply with governing accessibility regulations cited in “REFERENCES” article, herein.

G. Keying Conference

1. Incorporate keying conference decisions into final keying schedule after reviewing door hardware keying system including:

    a. Function of building, flow of traffic, purpose of each area, degree of security required, and plans for future expansion.
    b. Preliminary key system schematic diagram.
    c. Requirements for key control system.
    d. Requirements for access control.
    e. Address for delivery of keys.

H. Pre-installation Conference

1. Review and finalize construction schedule and verify availability of materials, Installer's personnel, equipment, and facilities needed to make progress and avoid delays.
2. Inspect and discuss preparatory work performed by other trades.
3. Inspect and discuss electrical roughing-in for electrified door hardware.
4. Review sequence of operation for each type of electrified door hardware.
5. Review required testing, inspecting, and certifying procedures.

I. Coordination Conferences:

1. Installation Coordination Conference: Prior to hardware installation, schedule and hold meeting to review questions or concerns related to proper installation and adjustment of door hardware.
2. Electrified Hardware Coordination Conference: Prior to ordering electrified hardware, schedule and hold meeting to coordinate door hardware with security, electrical, doors and frames, and other related suppliers.

1.06 DELIVERY, STORAGE, AND HANDLING

A. Inventory door hardware on receipt and provide secure lock-up for hardware delivered to Project site.

B. Tag each item or package separately with identification coordinated with final door hardware schedule, and include installation instructions, templates, and necessary fasteners with each item or package.

   1. Deliver each article of hardware in manufacturer's original packaging.

C. Project Conditions:

   1. Maintain manufacturer-recommended environmental conditions throughout storage and installation periods.
   2. Provide secure lock-up for door hardware delivered to Project. Control handling and installation of hardware items so that completion of Work will not be delayed by hardware losses both before and after installation.

D. Protection and Damage:

   1. Promptly replace products damaged during shipping.
   2. Handle hardware in manner to avoid damage, marring, or scratching. Correct, replace or repair products damaged during Work.
   3. Protect products against malfunction due to paint, solvent, cleanser, or any chemical agent.

E. Deliver keys to manufacturer of key control system for subsequent delivery to Owner.

F. Deliver keys to Owner by registered mail or overnight package service.

1.07 **COORDINATION**

A. Coordinate layout and installation of floor-recessed door hardware with floor construction. Cast anchoring inserts into concrete.

B. Installation Templates: Distribute for doors, frames, and other work specified to be factory or shop prepared. Check Shop Drawings of other work to confirm that adequate provisions are made for locating and installing door hardware to comply with indicated requirements.

C. Security: Coordinate installation of door hardware, keying, and access control with Owner's security consultant.

D. Electrical System Roughing-In: Coordinate layout and installation of electrified door hardware with connections to power supplies and building safety and security systems.

E. Existing Openings: Where existing doors, frames and/or hardware are to remain, field verify existing functions, conditions and preparations and coordinate to suit opening conditions and to provide proper door operation.

1.08 **WARRANTY**

A. Warranty: Manufacturer's standard form in which manufacturer agrees to repair or replace components of door hardware that fail in materials or workmanship within specified warranty period.

1. Warranty Period: Beginning from date of Substantial Completion, for durations indicated.

a. Closers:
1) Mechanical: LCN 4000 series, 30 years
2) Electrified: 2 years.

b. Automatic Operators: LCN, 2 years
c. Exit Devices:
1) Mechanical: 3 years.
2) Electrified: 1 year.

d. Locksets:
1) Mechanical: Schlage ND series, 10 years
2) Electrified: 1 year.

e. Continuous Hinges: Lifetime warranty.
f. Key Blanks: Lifetime

2. Warranty does not cover damage or faulty operation due to improper installation, improper use or abuse.

1.09 **MAINTENANCE**

A. Maintenance Tools: Furnish complete set of special tools required for maintenance and adjustment of hardware, including changing of cylinders.

PART 2 - PRODUCTS

2.01 **MANUFACTURERS**

A. NO SUB**:** The Owner requires use of certain products for their unique characteristics and project suitability to insure continuity of existing and future performance and maintenance standards. After investigating available product offerings, the Awarding Authority has elected to prepare proprietary specifications. These products are specified with the notation: “No Substitute.”

1. Where “No Substitute” is noted, submittals and substitution requests for other products will not be considered.

B. Approval of manufacturers and/or products other than those listed as “Scheduled Manufacturer” or “Acceptable Manufacturers” in the individual article for the product category shall be in accordance with QUALITY ASSURANCE article, herein.

C. Approval of products from manufacturers indicated in “Acceptable Manufacturers” is contingent upon those products providing all functions and features and meeting all requirements of scheduled manufacturer’s product.

D. Where specified hardware is not adaptable to finished shape or size of members requiring hardware, furnish suitable types having same operation and quality as type specified, subject to Architect's approval.

2.02 **MATERIALS**

A. Fasteners

1. Provide hardware manufactured to conform to published templates, generally prepared for machine screw installation.
2. Furnish screws for installation with each hardware item. Finish exposed (exposed under any condition) screws to match hardware finish, or, if exposed in surfaces of other work, to match finish of this other work including prepared for paint surfaces to receive painted finish.
3. Provide concealed fasteners for hardware units exposed when door is closed except when no standard units of type specified are available with concealed fasteners. Do not use thru-bolts for installation where bolt head or nut on opposite face is exposed in other work unless thru-bolts are required to fasten hardware securely. Review door specification and advise Architect if thru-bolts are required.
4. Install hardware with fasteners provided by hardware manufacturer.

B. Modification and Preparation of Existing Doors: Where existing door hardware is indicated to be removed and reinstalled.

1. Provide necessary fillers, Dutchmen, reinforcements, and fasteners, compatible with existing materials, as required for mounting new opening hardware and to cover existing door and frame preparations.
2. Use materials which match materials of adjacent modified areas.
3. When modifying existing fire-rated openings, provide materials permitted by NFPA 80 as required to maintain fire-rating.

C. Provide screws, bolts, expansion shields, drop plates and other devices necessary for hardware installation.

1. Where fasteners are exposed to view: Finish to match adjacent door hardware material.

D. Cable and Connectors: Hardwired Electronic Access Control Lockset and Exit Device Trim:

1. Data: 24AWG, 4 conductor shielded, Belden 9843, 9841 or comparable.
2. DC Power: 18 AWG, 2 conductor, Belden 8760 or comparable.

3. Provide type of data and DC power cabling required by access control device manufacturer for this installation.
4. Where scheduled in the hardware sets, provide each item of electrified hardware and wire harnesses with sufficient number and wire gauge with standardized Molex plug connectors to accommodate electric function of specified hardware. Provide Molex connectors that plug directly into connectors from harnesses, electric locking and power transfer devices. Provide through-door wire harness for each electrified locking device installed in a door and wire harness for each electrified hinge, electrified continuous hinge, electrified pivot, and electric power transfer for connection to power supplies.

2.03 **HINGES**

A. Manufacturers and Products:

1. Scheduled Manufacturer and Product: Ives 5BB series.
2. Acceptable Manufacturers and Products: Hager BB series, McKinney TA/T4A series, Stanley FBB Series.

B. Requirements:

1. Provide hinges conforming to ANSI/BHMA A156.1.
2. 1-3/4 inch (44 mm) thick doors, up to and including 36 inches (914 mm) wide:

    a. Exterior: Standard weight, bronze or stainless steel, 4-1/2 inches (114 mm) high
    b. Interior: Standard weight, steel, 4-1/2 inches (114 mm) high

3. 1-3/4 inch (44 mm) thick doors over 36 inches (914 mm) wide:

    a. Exterior: Heavy weight, bronze/stainless steel, 5 inches (127 mm) high
    b. Interior: Heavy weight, steel, 5 inches (127 mm) high

4. 2 inches or thicker doors:

    a. Exterior: Heavy weight, bronze or stainless steel, 5 inches (127 mm) high
    b. Interior: Heavy weight, steel, 5 inches (127 mm) high

5. Provide three hinges per door leaf for doors 90 inches (2286 mm) or less in height, and one additional hinge for each 30 inches (762 mm) of additional door height.
6. Where new hinges are specified for existing doors or existing frames, provide new hinges of identical size to hinge preparation present in existing door or existing frame.
7. Hinge Pins: Except as otherwise indicated, provide hinge pins as follows:

    a. Steel Hinges: Steel pins
    b. Non-Ferrous Hinges: Stainless steel pins
    c. Out-Swinging Exterior Doors: Non-removable pins
    d. Out-Swinging Interior Lockable Doors: Non-removable pins
    e. Interior Non-lockable Doors: Non-rising pins

8. Width of hinges: 4-1/2 inches (114 mm) at 1-3/4 inch (44 mm) thick doors, and 5 inches (127 mm) at 2 inches (51 mm) or thicker doors. Adjust hinge width as required for door, frame, and wall conditions to allow proper degree of opening.
9. Provide hinges with electrified options as scheduled in the hardware sets. Provide with sufficient number and wire gage to accommodate electric function of specified hardware. Locate electric hinge at second hinge from bottom or nearest to electrified locking component.
10. Provide mortar guard for each electrified hinge specified.
11. Provide spring hinges where specified. Provide two spring hinges and one bearing hinge per door leaf for doors 90 inches (2286 mm) or less in height. Provide one additional bearing hinge for each 30 inches (762 mm) of additional door height.

2.04 **CONTINUOUS HINGES**

A. Stainless Steel

1. Manufacturers:

a. Scheduled Manufacturer: Ives.
b. Acceptable Manufacturers: Markar, Stanley.

2. Requirements:

a. Provide pin and barrel continuous hinges conforming to ANSI/BHMA A156.26., Grade 1.
b. Provide pin and barrel continuous hinges fabricated from 14 gauge, type 304 stainless steel.
c. Provide twin self-lubricated nylon bearings at each hinge knuckle, with 0.25-inch (6 mm) diameter stainless steel pin.
d. Provide hinges capable of supporting door weights up to 600 pounds, and successfully tested for 1,500,000 cycles.
e. On fire-rated doors, provide pin and barrel continuous hinges that are classified for use on rated doors by testing agency acceptable to authority having jurisdiction.
f. Provide pin and barrel continuous hinges with electrified options as scheduled in the hardware sets. Provide with sufficient number and wire gage to accommodate electric function of specified hardware.
g. Install hinges with fasteners supplied by manufacturer.
h. Provide hinges 1 inch (25 mm) shorter in length than nominal height of door, unless otherwise noted or door details require shorter length and with symmetrical hole pattern.

B. Cold-Rolled Steel

1. Manufacturers:

a. Scheduled Manufacturer: Ives.
b. Acceptable Manufacturers: Markar, Stanley.

2. Requirements:

a. Provide pin and barrel continuous hinges conforming to ANSI/BHMA A156.26., Grade 1.
b. Provide pin and barrel continuous hinges fabricated from type 1012 cold rolled steel.
c. Provide twin self-lubricated nylon bearings at each hinge knuckle, with 0.25-inch (6 mm) diameter stainless steel pin.
d. Provide hinges capable of supporting door weights up to 600 pounds, and successfully tested for 1,500,000 cycles.
e. On fire-rated doors, provide pin and barrel continuous hinges that are classified for use on rated doors by testing agency acceptable to authority having jurisdiction.
f. Provide pin and barrel continuous hinges with electrified options as scheduled in the hardware sets. Provide with sufficient number and wire gage to accommodate electric function of specified hardware.
g. Install hinges with fasteners supplied by manufacturer.
h. Provide hinges 1 inch (25 mm) shorter in length than nominal height of door, unless otherwise noted or door details require shorter length and with symmetrical hole pattern.

C. Aluminum Geared

1. Manufacturers:

a. Scheduled Manufacturer: Ives.
b. Acceptable Manufacturers: Select, Stanley.

2. Requirements:

a. Provide aluminum geared continuous hinges conforming to ANSI/BHMA A156.26, Grade 1.
b. Provide aluminum geared continuous hinges, where specified in the hardware sets, fabricated from 6063-T6 aluminum.
c. Provide split nylon bearings at each hinge knuckle for quiet, smooth, self-lubricating operation.
d. Provide hinges capable of supporting door weights up to 450 pounds, and successfully tested for 1,500,000 cycles.
e. On fire-rated doors, provide aluminum geared continuous hinges that are classified for use on rated doors by testing agency acceptable to authority having jurisdiction.
f. Provide aluminum geared continuous hinges with electrified option scheduled in the hardware sets. Provide with sufficient number and wire gage to accommodate electric function of specified hardware.
g. Install hinges with fasteners supplied by manufacturer.
h. Provide hinges 1 inch (25 mm) shorter in length than nominal height of door, unless otherwise noted or door details require shorter length and with symmetrical hole pattern.

2.05 **ELECTRIC POWER TRANSFER**

A. Manufacturers:

a. Scheduled Manufacturer: Von Duprin EPT-10.
b. Acceptable Manufacturers: ABH PT1000, Securitron CEPT-10.

B. Provide power transfer with electrified options as scheduled in the hardware sets. Provide with number and gage of wires sufficient to accommodate electric function of specified hardware.

C. Locate electric power transfer per manufacturer's template and UL requirements, unless interference with operation of door or other hardware items.

2.06 **PIVOT SETS**

A. Manufacturers:

1. Scheduled Manufacturer: Ives.
2. Acceptable Manufacturers: Dorma, Rixson.

B. Requirements:

1. Provide pivot sets complete with oil-impregnated top pivot, unless indicated otherwise.
2. Where offset pivots are specified, Provide one intermediate pivot for doors less than 91 inches (2311 mm) high and one additional intermediate pivot per leaf for each additional 30 inches (762 mm) in height or fraction thereof. Intermediate pivots spaced equally not less than 25 inches (635 mm) or not more than 35 inches (889 mm) on center, for doors over 121 inches (3073 mm) high.
3. Provide appropriate model where pivot sets are scheduled at fire rated openings.
4. Provide lead-lined model where pivot sets are specified at lead-lined doors.
5. Provide pivots with electrified options as scheduled in the hardware sets. Provide with sufficient number and wire gage to accommodate electric function of specified hardware. Locate electrified pivot nearest to electrified locking component. If manufacturer of electrified locking component requires another device for power transfer then provide recommended power transfer device and appropriate quantity of pivots.
6. Provide mortar guard for each electric pivot specified, unless specified in hollow metal frame specification.

2.07 **EMERGENCY HARDWARE**

A. Double Lipped Strike

1. Manufacturers:

a. Scheduled Manufacturer: Ives.
b. Acceptable Manufacturers: ABH, Hager.

2. Provide double lip strike offset-hung to allow door to swing open in opposite direction unless detailed otherwise. Size for specific frame depth. Coordinate special latchbolt-hole

location and special template, as required, to operate with mortise lock being used as specified.
3. Provide compatible emergency stop/release as recommended by manufacturer of double lip strike or engineered to operate with double lip strike.

B. Emergency Stop/Release

1. Manufacturers:

a. Scheduled Manufacturer: Ives.
b. Acceptable Manufacturers: Hager, Stanley.

2. Provide emergency stop/release for doors with double lip strikes offset-hung to allow door to swing open in opposite direction unless detailed otherwise.

2.08 **FLUSH BOLTS**

A. Manufacturers:

1. Scheduled Manufacturer: Ives.
2. Acceptable Manufacturers: Burns, Rockwood.

B. Requirements:

1. Provide automatic, constant latching, and manual flush bolts with forged bronze or stainless-steel face plates, extruded brass levers, and with wrought brass guides and strikes. Provide 12 inch (305 mm) steel or brass rods at doors up to 90 inches (2286 mm) in height. For doors over 90 inches (2286 mm) in height increase top rods by 6 inches (152 mm) for each additional 6 inches (152 mm) of door height. Provide dust-proof strikes at each bottom flush bolt.

2.09 **SURFACE BOLTS**

A. Manufacturers:

1. Scheduled Manufacturer: Ives.
2. Acceptable Manufacturers: Burns, Rockwood.

B. Requirements:

1. Surface bolt s to have 1” throw for maximum security with concealed mounting that prevents vandalism. Units to be constructed of heavy duty steel and cUL listed up to three (3) hours when used on the inactive door of a pair up to 8’ in height.

2.10 COORDINATORS

A. Manufacturers:

1. Scheduled Manufacturer: Ives.
2. Acceptable Manufacturers: Burns, Rockwood.

B. Requirements:

1. Where pairs of doors are equipped with automatic flush bolts, an astragal, or other hardware that requires synchronized closing of the doors, provide bar-type coordinating device, surface applied to underside of stop at frame head.
2. Provide filler bar of correct length for unit to span entire width of opening, and appropriate brackets for parallel arm door closers, surface vertical rod exit device strikes or other stop mounted hardware. Factory-prepared coordinators for vertical rod devices as specified.

2.11 **CYLINDRICAL LOCKS – GRADE 1**

A. Manufacturers and Products:

1. Scheduled Manufacturer and Product: Schlage ND series. – No Substitutions

B. Requirements:

1. Provide cylindrical locks conforming to ANSI/BHMA A156.2 Series 4000, Grade 1, and UL Listed for 3 hour fire doors.
2. Cylinders: Refer to “KEYING” article, herein.
3. Provide locks with standard 2-3/4 inches (70 mm) backset, unless noted otherwise, with 1/2 inch latch throw. Provide proper latch throw for UL listing at pairs.
4. Provide locksets with separate anti-rotation thru-bolts, and no exposed screws.
5. Provide independently operating levers with two external return spring cassettes mounted under roses to prevent lever sag.
6. Provide standard ASA strikes unless extended lip strikes are necessary to protect trim.
7. Provide electrified options as scheduled in the hardware sets.
8. Lever Trim: Solid cast levers without plastic inserts and wrought roses on both sides.

    a. Lever Design: Schlage RHO.
    b. Tactile Warning (Knurling): Where required by authority having jurisdiction. Provide on levers on exterior (secure side) of doors serving rooms considered to be hazardous.

2.12 **HOSPITAL LATCHES**

A. Manufacturers and Products:

1. Scheduled Manufacturer and Product: Schlage HL6E series.
2. Acceptable Manufacturers and Products: ABH 6000 series, Sargent 114P/115P series.

B. Requirements:

1. Provide hospital latches conforming to ANSI/BHMA A156 with covers engraved "Push" and "Pull".
2. Provide hospital latches with standard 5 inches (127 mm) backset, unless noted otherwise, with 1/2 inch (13 mm) latch throw. Provide proper latch throw for UL listing at pairs.
3. Dampened paddle action – depression and snap back – to reduce noise associated with lock operation.
4. Provide standard ASA strikes unless extended lip strikes are necessary to protect trim.
5. Mount trim with push paddle mounted up and pull paddle mounted down except at psychiatric or security areas provide both paddles mounted down, unless noted otherwise.

2.13 **EXIT DEVICES**

A. Manufacturers and Products:

1. Scheduled Manufacturer and Product: Von Duprin 98/35A Series – No Substitutions

B. Requirements:

1. Provide exit devices tested to ANSI/BHMA A156.3 Grade 1 and UL listed for Panic Exit or Fire Exit Hardware.
2. Cylinders: Refer to “KEYING” article, herein.
3. Provide touchpad type exit devices, fabricated of brass, bronze, stainless steel, or aluminum, plated to standard architectural finishes to match balance of door hardware.
4. Touchpad must extend a minimum of one half of door width. No plastic inserts are allowed in touchpads.
5. Provide exit devices with deadlatching feature for security and for future addition of alarm kits and/or other electrified requirements.
6. Provide flush end caps for exit devices.
7. Provide exit devices with manufacturer’s approved strikes.
8. Provide exit devices cut to door width and height. Install exit devices at height recommended by exit device manufacturer, allowable by governing building codes, and approved by Architect.
9. Mount mechanism case flush on face of doors, or provide spacers to fill gaps behind devices. Where glass trim or molding projects off face of door, provide glass bead kits.
10. Provide cylinder or hex-key dogging as specified at non fire-rated openings.
11. Removable Mullions: 2 inches (51 mm) x 3 inches (76 mm) steel tube. Where scheduled as keyed removable mullion, provide type that can be removed by use of a keyed cylinder, which is self-locking when re-installed.
12. Provide factory drilled weep holes for exit devices used in full exterior application, highly corrosive areas, and where noted in hardware sets.
13. Provide electrified options as scheduled.
14. QM 98/99 Rim Exit Devices: provide devices with damper controlled re-latching to reduce operational noise. Where lever trim is specified, provide damper controlled lever return.

15. Top latch mounting: double or single tab mount for steel doors, face mount for aluminum doors eliminating requirement of tabs, and double tab mount for wood doors.
16. Provide exit devices with optional trim designs to match other lever and pull designs used on the project.

    a. Tactile Warning (Knurling): Where required by authority having jurisdiction. Provide on levers on exterior (secure side) of doors serving rooms considered to be hazardous.

2.14 **ELECTRIC STRIKES**

A. Manufacturers and Products:

1. Scheduled Manufacturer and Product: Von Duprin 6000 Series.
2. Acceptable Manufacturers and Products: Folger Adam 300 Series, HES 1006 Series.

B. Requirements:

1. Provide electric strikes designed for use with type of locks shown at each opening.
2. Provide electric strikes UL Listed as burglary-resistant.
3. Where required, provide electric strikes UL Listed for fire doors and frames.
4. Provide transformers and rectifiers for each strike as required. Verify voltage with electrical contractor.

2.15 **PASSIVE INFRARED MOTION SENSORS**

A. Manufacturers and Products:

1. Scheduled Manufacturer and Product: Schlage SCAN II Series.
2. Acceptable Manufacturers and Products: RCI 915 Series, Securitron XMS Series, Security Door Controls MD-31D Series.

B. Requirements:

1. Provide motion sensors as specified in hardware groups.

2.16 **POWER SUPPLIES**

A. Manufacturers and Products:

1. Scheduled Manufacturer and Product: Schlage/Von Duprin PS900 series.
2. Acceptable Manufacturers and Products: Precision ELR series, Sargent 3500 series, Dynalock 5000 series, Securitron BPS series, Security Door Controls 600 series.

B. Requirements:

1. Provide power supplies approved by manufacturer of supplied electrified hardware.
2. Provide appropriate quantity of power supplies necessary for proper operation of electrified locking components as recommended by manufacturer of electrified locking components with consideration for each electrified component using power supply, location of power supply, and approved wiring diagrams. Locate power supplies as directed by Architect.
3. Provide regulated and filtered 24 VDC power supply, and UL class 2 listed.
4. Provide power supplies with the following features:

    a. 12/24 VDC Output, field selectable.
    b. Class 2 Rated power limited output.
    c. Universal 120-240 VAC input.
    d. Low voltage DC, regulated and filtered.
    e. Polarized connector for distribution boards.
    f. Fused primary input.
    g. AC input and DC output monitoring circuit w/LED indicators.
    h. Cover mounted AC Input indication.
    i. Tested and certified to meet UL294.
    j. NEMA 1 enclosure.
    k. Hinged cover w/lock down screws.
    l. High voltage protective cover.

2.17 **CYLINDERS**: MATCH EXISTING KEY SYSTEM

A. Manufacturers:

1. Scheduled Manufacturer: Schlage SFIC Everest core

B. Requirements:

1. Provide permanent interchangeable cylinders/cores to match Owner's existing key system, compliant with ANSI/BHMA A156.5; latest revision; cylinder face finished to match lockset, manufacturer's series as indicated. Refer to "KEYING" article, herein.

C. Construction Keying:

1. Temporary Construction Cylinder Keying.

    a. Provide construction cores that permit voiding construction keys without cylinder removal, furnished in accordance with the following requirements.
        1) Split Key or Lost Ball Construction Keying System.
        2) 3 construction control keys, and extractor tools or keys as required to void construction keying.
        3) 12 construction change (day) keys.

    b. Owner or Owner's Representative will void operation of temporary construction keys.

2. Replaceable Construction Cores.

a. Provide temporary construction cores replaceable by permanent cores, furnished in accordance with the following requirements.
   1) 3 construction control keys
   2) 12 construction change (day) keys.

b. Owner or Owner's Representative will replace temporary construction cores with permanent cores.

2.18 **KEYING**

A. Provide a factory registered keying system, complying with guidelines in ANSI/BHMA A156.28, incorporating decisions made at keying conference.

B. For factory registered existing system: Provide cylinders/cores keyed into Owner's existing factory registered keying system.

C. Comply with guidelines in ANSI/BHMA A156.28, incorporating decisions made at keying conference.

D. For non-factory existing system: Provide cylinders/cores keyed into Owner's existing keying system managed by Owner's locksmith, complying with guidelines in ANSI/BHMA A156.28, incorporating decisions made at keying conference. Contact:

1. Firm Name:
2. Contact Person:
3. Telephone:

E. Requirements:

1. Provide permanent cylinders/cores keyed by the manufacturer according to the following key system.

   a. Master Keying system as directed by the Owner.
   b. No Master Keying: Cylinders/cores only operated by change (day) keys.

2. Forward bitting list and keys separately from cylinders, by means as directed by Owner. Failure to comply with forwarding requirements will be cause for replacement of cylinders/cores involved at no additional cost to Owner.
3. Provide keys with the following features:

   a. Material: Nickel silver; minimum thickness of .107-inch (2.3mm)
   b. Patent Protection: Keys and blanks protected by one or more utility patent(s) for Schlage Everest 29 until the year, 2029.

4. Identification:

   a. Mark permanent cylinders/cores and keys with applicable blind code per DHI publication "Keying Systems and Nomenclature" for identification. Do not provide blind code marks with actual key cuts.

b. Identification stamping provisions must be approved by the Architect and Owner.
c. Stamp cylinders/cores and keys with Owner's unique key system facility code as established by the manufacturer; key symbol and embossed or stamped with "DO NOT DUPLICATE" along with the "PATENTED" or patent number to enforce the patent protection.
d. Failure to comply with stamping requirements will be cause for replacement of keys involved at no additional cost to Owner.
e. Forward permanent cylinders/cores to Owner, separately from keys, by means as directed by Owner.

5. Quantity: Furnish in the following quantities.

a. Change (Day) Keys: 3 per cylinder/core.
b. SFIC: Permanent Control Keys: 3.
c. Master Keys: 6.

2.19 **KEY CONTROL SYSTEM**

A. Manufacturers:

1. Scheduled Manufacturer: Telkee.
2. Acceptable Manufacturers: HPC, Lund.

B. Requirements:

1. Provide key control system, including envelopes, labels, tags with self-locking key clips, receipt forms, 3-way visible card index, temporary markers, permanent markers, and standard metal cabinet, all as recommended by system manufacturer, with capacity for 150% of number of locks required for Project.

a. Provide complete cross index system set up by hardware supplier, and place keys on markers and hooks in cabinet as determined by final key schedule.
b. Provide hinged-panel type cabinet for wall mounting.

2.20 **KEY MANAGEMENT SOFTWARE**

A. Manufacturers and Products:

1. Scheduled Manufacturer and Product: Schlage SITEMASTER 200.
2. Acceptable Manufacturers and Products: Best Keystone 600N, Corbin-Russwin KeyWizard, Medeco KeyWizard, Sargent KeyWizard, Yale KeyWizard.

B. Requirements:

1. Software: Provide tracking, issuing, collecting and transferring information regarding keys. Provide customized query, reporting, searching capability, comprehensive location hardware listings, display key holder photos and signature for verification, and provide automatic reminders for maintenance, back-ups and overdue keys.

2. Provide training for Owner's personnel on proper operation and application of key management software.

2.21 DOOR CLOSERS

A. Manufacturers and Products:

1. Scheduled Manufacturer and Product: LCN 4040XP series – No Substitutions

B. Requirements:

1. Provide door closers conforming to ANSI/BHMA A156.4 Grade 1 requirements by BHMA certified independent testing laboratory. ISO 9000 certify closers. Stamp units with date of manufacture code.
2. Provide door closers with fully hydraulic, full rack and pinion action with high strength cast iron cylinder, and full complement bearings at shaft.
3. Cylinder Body: 1-1/2 inch (38 mm) diameter with 3/4 inch (19 mm) diameter double heat-treated pinion journal.
4. Hydraulic Fluid: Fireproof, passing requirements of UL10C, and requiring no seasonal closer adjustment for temperatures ranging from 120 degrees F to -30 degrees F.
5. Spring Power: Continuously adjustable over full range of closer sizes, and providing reduced opening force as required by accessibility codes and standards.
6. Hydraulic Regulation: By tamper-proof, non-critical valves, with separate adjustment for latch speed, general speed, and backcheck.
7. Provide closers with solid forged steel main arms and factory assembled heavy-duty forged forearms for parallel arm closers.
8. Pressure Relief Valve (PRV) Technology: Not permitted.
9. Finish for Closer Cylinders, Arms, Adapter Plates, and Metal Covers: Powder coating finish which has been certified to exceed 100 hours salt spray testing as described in ANSI Standard A156.4 and ASTM B117, or has special rust inhibitor (SRI).
10. Provide special templates, drop plates, mounting brackets, or adapters for arms as required for details, overhead stops, and other door hardware items interfering with closer mounting.

2.22 PROTECTION PLATES

A. Manufacturers:

1. Scheduled Manufacturer: Ives.
2. Acceptable Manufacturers: Burns, Rockwood.

B. Requirements:

1. Provide kick plates, mop plates, and armor plates minimum of 0.050 inch (1 mm) thick, beveled four edges as scheduled. Furnish with sheet metal or wood screws, finished to match plates.
2. Sizes of plates:

a. Kick Plates: 10 inches (254 mm) high by 2 inches (51 mm) less width of door on single doors, 1 inch (25 mm) less width of door on pairs
b. Mop Plates: 4 inches (102 mm) high by 2 inches (51 mm) less width of door on single doors, 1 inch (25 mm) less width of door on pairs
c. Armor Plates: 36 inches (914 mm) high by 2 inches (51 mm) less width of door on single doors, 1 inch (25 mm) less width of door on pairs

2.23 OVERHEAD STOPS AND OVERHEAD STOP/HOLDERS

A. Manufacturers:

1. Scheduled Manufacturers: Glynn-Johnson.
2. Acceptable Manufacturers: Rixson, Sargent.

B. Requirements:

1. Provide heavy duty concealed mounted overhead stop or holder as specified for exterior and interior vestibule single acting doors.
2. Provide heavy duty concealed mounted overhead stop or holder as specified for double acting doors.
3. Provide heavy or medium duty and concealed or surface mounted overhead stop or holder for interior doors as specified. Provide medium duty surface mounted overhead stop for interior doors and at any door that swings more than 140 degrees before striking wall, open against equipment, casework, sidelights, and where conditions do not allow wall stop or floor stop presents tripping hazard.
4. Where overhead holders are specified provide friction type at doors without closer and positive type at doors with closer.

2.24 DOOR STOPS AND HOLDERS

A. Manufacturers:

1. Scheduled Manufacturer: Ives.
2. Acceptable Manufacturers: Burns, Rockwood.

B. Provide door stops at each door leaf:

1. Provide wall stops wherever possible. Provide convex type where mortise type locks are used and concave type where cylindrical type locks are used.
2. Where a wall stop cannot be used, provide universal floor stops for low or high rise options.
3. Where wall or floor stop cannot be used, provide medium duty surface mounted overhead stop.

2.25 THRESHOLDS, SEALS, DOOR SWEEPS, AUTOMATIC DOOR BOTTOMS, AND GASKETING

A. Manufacturers:

1. Scheduled Manufacturer: Zero International.
2. Acceptable Manufacturers: National Guard, Reese.

B. Requirements:

1. Provide thresholds, weather-stripping (including door sweeps, seals, and astragals) and gasketing systems (including smoke, sound, and light) as specified and per architectural details. Match finish of other items.
2. Smoke- and Draft-Control Door Assemblies: Where smoke- and draft-control door assemblies are required, provide door hardware that meets requirements of assemblies tested according to UL 1784 and installed in compliance with NFPA 105.
3. Size of thresholds:

    a. Saddle Thresholds: 1/2 inch (13 mm) high by jamb width by door width
    b. Bumper Seal Thresholds: 1/2 inch (13 mm) high by 5 inches (127 mm) wide by door width

4. Provide door sweeps, seals, astragals, and auto door bottoms only of type where resilient or flexible seal strip is easily replaceable and readily available.

2.26 SILENCERS

A. Manufacturers:

1. Scheduled Manufacturer: Ives.
2. Acceptable Manufacturers: Burns, Rockwood.

B. Requirements:

1. Provide "push-in" type silencers for hollow metal or wood frames.
2. Provide one silencer per 30 inches (762 mm) of height on each single frame, and two for each pair frame.
3. Omit where gasketing is specified.

2.27 MAGNETIC HOLDERS

A. Manufacturers:

1. Scheduled Manufacturer: LCN.
2. Acceptable Manufacturers: Rixson, Sargent.

B. Requirements:

1. Provide wall or floor mounted electromagnetic door release as specified with minimum of 25 pounds of holding force. Coordinate projection of holder and armature with other hardware and wall conditions to ensure that door sits parallel to wall when fully open. Connect magnetic holders on fire-rated doors into the fire control panel for fail-safe operation.

2.28 **DOOR POSITION SWITCHES**

A. Manufacturers:

1. Scheduled Manufacturer: Schlage.
2. Acceptable Manufacturers: GE-Interlogix, Sargent.

B. Requirements:

1. Provide recessed or surface mounted type door position switches as specified.
2. Coordinate door and frame preparations with door and frame suppliers. If switches are being used with magnetic locking device, provide minimum of 4 inches (102 mm) between switch and magnetic locking device.

2.29 **FINISHES**

A. Finish: BHMA 626/652 (US26D); except:

1. Hinges at Exterior Doors: BHMA 630 (US32D)
2. Continuous Hinges: BHMA 630 (US32D)
3. Continuous Hinges: BHMA 628 (US28)
4. Push Plates, Pulls, and Push Bars: BHMA 630 (US32D)
5. Protection Plates: BHMA 630 (US32D)
6. Overhead Stops and Holders: BHMA 630 (US32D)
7. Door Closers: Powder Coat to Match
8. Wall Stops: BHMA 630 (US32D)
9. Latch Protectors: BHMA 630 (US32D)
10. Weatherstripping: Clear Anodized Aluminum
11. Thresholds: Mill Finish Aluminum

B. Finish: BHMA 625/651 (US26); except:

1. Hinges at Exterior Doors: BHMA 629 (US32)
2. Continuous Hinges: BHMA 630 (US32D)
3. Continuous Hinges: BHMA 628 (US28)
4. Push Plates, Pulls, and Push Bars: BHMA 629 (US32)
5. Protection Plates: BHMA 629 (US32)
6. Overhead Stops and Holders: BHMA 629 (US32)
7. Door Closers: Powder Coat to Match
8. Wall Stops: BHMA 629 (US32)
9. Latch Protectors: BHMA 630 (US32D)

10. Weatherstripping: Clear Anodized Aluminum
11. Thresholds: Mill Finish Aluminum

C. Finish: BHMA 612/639 (US10); except:

1. Continuous Hinges: BHMA 630 (US32D)
2. Continuous Hinges: BHMA 709 (US10)
3. Door Closers: Powder Coat to Match
4. Latch Protectors: BHMA 630 (US32D)
5. Weatherstripping: Dark Bronze Anodized Aluminum
6. Thresholds: Extruded Architectural Bronze – Mill Finish

D. Finish: BHMA 613/640 (US10B); except:

1. Continuous Hinges: US32D (BHMA 630).
2. Continuous Hinges: BHMA 710 (US10B)
3. Door Closers: Powder Coat to Match.
4. Latch Protectors: US32D (BHMA 630).
5. Weatherstripping: Dark Bronze Anodized Aluminum.
6. Thresholds: Extruded Architectural Bronze, Oil-Rubbed

E. Finish: BHMA 605/632 (US3); except:

1. Continuous Hinges: BHMA 630 (US32D)
2. Door Closers: Powder Coat to Match
3. Latch Protectors: BHMA 630 (US32D)
4. Weatherstripping: Gold Anodized Aluminum.
5. Thresholds: Extruded Architectural Bronze, Polished

F. Finish: BHMA 606/633 (US4); except:

1. Continuous Hinges: BHMA 630 (US32D)
2. Continuous Hinges: BHMA 688 (US4)
3. Door Closers: Powder Coat to Match
4. Latch Protectors: BHMA 630 (US32D)
5. Weatherstripping: Gold Anodized Aluminum
6. Thresholds: Extruded Architectural Bronze – Mill Finish

PART 3 - EXECUTION

3.01 EXAMINATION

A. Prior to installation of hardware, examine doors and frames, with Installer present, for compliance with requirements for installation tolerances, labeled fire-rated door assembly construction, wall and floor construction, and other conditions affecting performance.

B. Field verify existing doors and frames receiving new hardware and existing conditions receiving new openings. Verify that new hardware is compatible with existing door and frame preparation and existing conditions.

C. Examine roughing-in for electrical power systems to verify actual locations of wiring connections before electrified door hardware installation.

D. Proceed with installation only after unsatisfactory conditions have been corrected.

3.02 INSTALLATION

A. Mount door hardware units at heights to comply with the following, unless otherwise indicated or required to comply with governing regulations.

1. Standard Steel Doors and Frames: ANSI/SDI A250.8.
2. Custom Steel Doors and Frames: HMMA 831.
3. Wood Doors: DHI WDHS.3, "Recommended Locations for Architectural Hardware for Wood Flush Doors."

B. Install each hardware item in compliance with manufacturer's instructions and recommendations, using only fasteners provided by manufacturer.

C. Do not install surface mounted items until finishes have been completed on substrate. Protect all installed hardware during painting.

D. Set units level, plumb and true to line and location. Adjust and reinforce attachment substrate as necessary for proper installation and operation.

E. Drill and countersink units that are not factory prepared for anchorage fasteners. Space fasteners and anchors according to industry standards.

F. Install operating parts so they move freely and smoothly without binding, sticking, or excessive clearance.

G. Hinges: Install types and in quantities indicated in door hardware schedule but not fewer than quantity recommended by manufacturer for application indicated or one hinge for every 30 inches (750 mm) of door height, whichever is more stringent, unless other equivalent means of support for door, such as spring hinges or pivots, are provided.

H. Intermediate Offset Pivots: Where offset pivots are indicated, provide intermediate offset pivots in quantities indicated in door hardware schedule but not fewer than one intermediate offset pivot per door and one additional intermediate offset pivot for every 30 inches (750 mm) of door height greater than 90 inches (2286 mm).

I. Lock Cylinders: Install construction cores to secure building and areas during construction period.

1. Replace construction cores with permanent cores as indicated in keying section.

2. Furnish permanent cores to Owner for installation.

J. Lead Protection: Lead wrap hardware penetrating lead-lined doors. Levers and roses to be lead lined. Apply kick and armor plates on lead-lined doors with adhesive as recommended by manufacturer.

K. Wiring: Coordinate with Division 26, ELECTRICAL sections for:

1. Conduit, junction boxes and wire pulls.
2. Connections to and from power supplies to electrified hardware.
3. Connections to fire/smoke alarm system and smoke evacuation system.
4. Connection of wire to door position switches and wire runs to central room or area, as directed by Architect.
5. Testing and labeling wires with Architect's opening number.

L. Key Control System: Tag keys and place them on markers and hooks in key control system cabinet, as determined by final keying schedule.

M. Door Closers: Mount closers on room side of corridor doors, inside of exterior doors, and stair side of stairway doors from corridors. Mount closers so they are not visible in corridors, lobbies and other public spaces unless approved by Architect.

N. Closer/Holders: Mount closer/holders on room side of corridor doors, inside of exterior doors, and stair side of stairway doors.

O. Power Supplies: Locate power supplies as indicated or, if not indicated, above accessible ceilings or in equipment room, or alternate location as directed by Architect.

P. Thresholds: Set thresholds in full bed of sealant complying with requirements specified in Division 07 Section "Joint Sealants."

Q. Stops: Provide floor stops for doors unless wall or other type stops are indicated in door hardware schedule. Do not mount floor stops where they may impede traffic or present tripping hazard.

R. Perimeter Gasketing: Apply to head and jamb, forming seal between door and frame.

S. Meeting Stile Gasketing: Fasten to meeting stiles, forming seal when doors are closed.

T. Door Bottoms: Apply to bottom of door, forming seal with threshold when door is closed.

3.03 **FIELD QUALITY CONTROL**

A. Engage qualified manufacturer trained representative to perform inspections and to prepare inspection reports.

1. Representative will inspect door hardware and state in each report whether installed work complies with or deviates from requirements, including whether door hardware is properly installed and adjusted.

3.04 **ADJUSTING**

A. Initial Adjustment: Adjust and check each operating item of door hardware and each door to ensure proper operation or function of every unit. Replace units that cannot be adjusted to operate as intended. Adjust door control devices to compensate for final operation of heating and ventilating equipment and to comply with referenced accessibility requirements.

   1. Electric Strikes: Adjust horizontal and vertical alignment of keeper to properly engage lock bolt.
   2. Door Closers: Adjust sweep period to comply with accessibility requirements and requirements of authorities having jurisdiction.

B. Occupancy Adjustment: Approximately three to six months after date of Substantial Completion, Installer's Architectural Hardware Consultant must examine and readjust each item of door hardware, including adjusting operating forces, as necessary to ensure function of doors and door hardware.

3.05 **CLEANING AND PROTECTION**

A. Clean adjacent surfaces soiled by door hardware installation.

B. Clean operating items as necessary to restore proper function and finish.

C. Provide final protection and maintain conditions that ensure door hardware is without damage or deterioration at time of Substantial Completion.

3.06 **DOOR HARDWARE SCHEDULE**

Hardware Group No. 003

For use on Door #(s):
1032 1040 1055

Provide each SL door(s) with the following:

QTY		DESCRIPTION	CATALOG NUMBER	FINISH	MFR
	EA	NOTE	REMAINDER OF HARDWARE BY DOOR MANUFACTURER		

ICU BREAKAWAY DOORS, ALL HARDWARE BY DOOR MFR.

Hardware Group No. 005

For use on Door #(s):
1001A

Provide each SL door(s) with the following:

QTY		DESCRIPTION	CATALOG NUMBER	FINISH	MFR
	EA	NOTE	REMAINDER OF HARDWARE BY DOOR MANUFACTURER		

ALL HARDWARE BY DOOR MFR.

Hardware Group No.101

For use on Door #(s):
1012 1066 1067 2017 2019 2021
2066A 2066B 2078 3021 3022 3027
3039 3108

Provide each SGL door(s) with the following:

QTY		DESCRIPTION	CATALOG NUMBER		FINISH	MFR
3	EA	HINGE	5BB1 4.5 X 4.5		652	IVE
1	EA	ENTRANCE LOCK	ND53HD RHO		626	SCH
1	EA	SFIC EVEREST CORE	80-037		626	SCH
1	EA	SURFACE CLOSER	4040XP RW/PA X MTG BRKT, SPCR & PLATE AS REQ		689	LCN
1	EA	PROTECTION PLATE	8400 10" X 2" LDW B-CS		630	IVE
1	EA	GASKETING	188S PSA H & J (USE SILENCERS @ NON-RATED DOORS)		BK	ZER

Hardware Group No.101CG

For use on Door #(s):

1024 1025 1027

Provide each SGL door(s) with the following:

QTY		DESCRIPTION	CATALOG NUMBER		FINISH	MFR
3	EA	HINGE	5BB1 4.5 X 4.5		652	IVE
1	EA	ENTRANCE LOCK	ND53HD RHO		626	SCH
1	EA	SFIC EVEREST CORE	80-037		626	SCH
1	EA	SURFACE CLOSER	4040XP SCUSH X MTG BRKT, SPCR & PLATE AS REQ		689	LCN
1	EA	PROTECTION PLATE	8400 10" X 2" LDW B-CS		630	IVE
1	EA	GASKETING	188S PSA H & J		BK	ZER
1	EA	DOOR BOTTOM	364AA-Z49 LENGTH AS REQ		AA	ZER

-EXTRA GASKETING FOR SOUND REDUCTION

Hardware Group No. 103

For use on Door #(s):

2008	3011	3012	3019	3023	3028
3029	3030	3031	3033	3043	3045
3046	3047	3048	3052	3053	3054
3055	3056	3057	3058	3059	3060
3061	3062	3063	3064	3065	3066
3067	3069	3070	3071	3072	3073
3074	3075	3076	3077	3078	3079
3080	3081	3082	3083	3084	3085
3086	3089	3090	3093	3095	3096
3097	3098	3099	B004	B024	B027

Provide each SGL door(s) with the following:

QTY		DESCRIPTION	CATALOG NUMBER		FINISH	MFR
3	EA	HINGE	5BB1 4.5 X 4.5		652	IVE
1	EA	ENTRANCE LOCK	ND53HD RHO		626	SCH
1	EA	SFIC EVEREST CORE	80-037		626	SCH
1	EA	WALL STOP	WS406/407CCV		630	IVE
1	EA	GASKETING	188S PSA H & J (USE SILENCERS @ NON-RATED DOORS)		BK	ZER

Hardware Group No. 103G

For use on Door #(s):

1046	2016	2056A	2056B	2067A	2067B
3015	3017	3020	3032	3049	3050
3091A	3091B				

Provide each SGL door(s) with the following:

QTY		DESCRIPTION	CATALOG NUMBER		FINISH	MFR
3	EA	HINGE	5BB1 4.5 X 4.5		652	IVE
1	EA	ENTRANCE LOCK	ND53HD RHO		626	SCH
1	EA	SFIC EVEREST CORE	80-037		626	SCH
1	EA	WALL STOP	WS406/407CCV		630	IVE
1	EA	GASKETING	188S PSA H & J		BK	ZER
1	EA	DOOR BOTTOM	364AA-Z49 LENGTH AS REQ		AA	ZER

-EXTRA GASKETING FOR SOUND REDUCTION

Hardware Group No. 107G

For use on Door #(s):

1015	2002

Provide each SGL door(s) with the following:

QTY		DESCRIPTION	CATALOG NUMBER		FINISH	MFR
3	EA	HINGE	5BB1 4.5 X 4.5		652	IVE
1	EA	ENTRANCE LOCK	ND53HD RHO		626	SCH
1	EA	SFIC EVEREST CORE	80-037		626	SCH
1	EA	OH STOP	900S SERIES X SIZE & MOUNTING AS REQ		630	GLY
1	EA	SURFACE CLOSER	4040XP RW/PA X MTG BRKT, SPCR & PLATE AS REQ		689	LCN
1	EA	PROTECTION PLATE	8400 10" X 2" LDW B-CS		630	IVE
1	EA	GASKETING	188S PSA H & J		BK	ZER
1	EA	DOOR BOTTOM	360AA-Z49 LENGTH AS REQ		AA	ZER

-EXTRA GASKETING FOR SOUND REDUCTION

Hardware Group No. 200S

For use on Door #(s):
B017

Provide each PR door(s) with the following:

QTY		DESCRIPTION	CATALOG NUMBER		FINISH	MFR
6	EA	HINGE	5BB1 4.5 X 4.5		652	IVE
1	SET	AUTO FLUSH BOLT	FB31P/FB41P AS REQ		630	IVE
1	EA	DUST PROOF STRIKE	DP2		626	IVE
1	EA	STOREROOM LOCK	ND80HD RHO		626	SCH
1	EA	SFIC EVEREST CORE	80-037		626	SCH
1	EA	COORDINATOR	COR X FL X MB X HW PREPS X LENGTH AS REQUIRED		628	IVE
1	EA	OH STOP	900S SERIES X SIZE & MOUNTING AS REQ		630	GLY
2	EA	SURFACE CLOSER	4040XP RW/PA X MTG BRKT, SPCR & PLATE AS REQ		689	LCN
2	EA	PROTECTION PLATE	8400 10" X 1" LDW B-CS		630	IVE
1	EA	WALL STOP	WS406/407CCV		630	IVE
1	EA	GASKETING	188S PSA H & J (USE SILENCERS @ NON-RATED DOORS)		BK	ZER
1	EA	MEETING STILE	328AA (2 PCS - 1 SET) HEIGHT AS REQUIRED (OMIT @ NON-RATED DOORS)		AA	ZER

Hardware Group No. 201

For use on Door #(s):

1005	1014	1016	1021	1061	1065
2003	2009	2012	2014	2074	3002
3003	3014	3024	3034	B002	B012
B021	B022				

Provide each SGL door(s) with the following:

QTY		DESCRIPTION	CATALOG NUMBER		FINISH	MFR
3	EA	HINGE	5BB1 4.5 X 4.5		652	IVE
1	EA	STOREROOM LOCK	ND80HD RHO		626	SCH
1	EA	SFIC EVEREST CORE	80-037		626	SCH
1	EA	SURFACE CLOSER	4040XP RW/PA X MTG BRKT, SPCR & PLATE AS REQ		689	LCN
1	EA	PROTECTION PLATE	8400 10" X 2" LDW B-CS		630	IVE
1	EA	WALL STOP	WS406/407CCV		630	IVE
1	EA	GASKETING	188S PSA H & J (USE SILENCERS @ NON-RATED DOORS)		BK	ZER

Hardware Group No. 201C

For use on Door #(s):

3104

Provide each SGL door(s) with the following:

QTY		DESCRIPTION	CATALOG NUMBER		FINISH	MFR
3	EA	HINGE	5BB1 4.5 X 4.5		652	IVE
1	EA	STOREROOM LOCK	ND80HD RHO		626	SCH
1	EA	SFIC EVEREST CORE	80-037		626	SCH
1	EA	SURFACE CLOSER	4040XP SCUSH X MTG BRKT, SPCR & PLATE AS REQ		689	LCN
1	EA	PROTECTION PLATE	8400 10" X 2" LDW B-CS		630	IVE
1	EA	GASKETING	188S PSA H & J (USE SILENCERS @ NON-RATED DOORS)		BK	ZER

Hardware Group No. 201CW

For use on Door #(s):
B028

Provide each SGL door(s) with the following:

QTY		DESCRIPTION	CATALOG NUMBER		FINISH	MFR
3	EA	HINGE	5BB1HW 5 X 4.5		652	IVE
1	EA	STOREROOM LOCK	ND80HD RHO		626	SCH
1	EA	SFIC EVEREST CORE	80-037		626	SCH
1	EA	SURFACE CLOSER	4040XP SCUSH X MTG BRKT, SPCR & PLATE AS REQ		689	LCN
1	EA	PROTECTION PLATE	8400 10" X 2" LDW B-CS		630	IVE
1	EA	GASKETING	188S PSA H & J (USE SILENCERS @ NON-RATED DOORS)		BK	ZER

Hardware Group No. 201W

For use on Door #(s):
1041 1048 1052

Provide each SGL door(s) with the following:

QTY		DESCRIPTION	CATALOG NUMBER		FINISH	MFR
3	EA	HINGE	5BB1HW 5 X 4.5		652	IVE
1	EA	STOREROOM LOCK	ND80HD RHO		626	SCH
1	EA	SFIC EVEREST CORE	80-037		626	SCH
1	EA	SURFACE CLOSER	4040XP RW/PA X MTG BRKT, SPCR & PLATE AS REQ		689	LCN
1	EA	PROTECTION PLATE	8400 10" X 2" LDW B-CS		630	IVE
1	EA	WALL STOP	WS406/407CCV		630	IVE
1	EA	GASKETING	188S PSA H & J (USE SILENCERS @ NON-RATED DOORS)		BK	ZER

Hardware Group No. 203

For use on Door #(s):

3040 B005

Provide each SGL door(s) with the following:

QTY		DESCRIPTION	CATALOG NUMBER		FINISH	MFR
3	EA	HINGE	5BB1 4.5 X 4.5		652	IVE
1	EA	STOREROOM LOCK	ND80HD RHO		626	SCH
1	EA	SFIC EVEREST CORE	80-037		626	SCH
1	EA	WALL STOP	WS406/407CCV		630	IVE
1	EA	GASKETING	188S PSA H & J (USE SILENCERS @ NON-RATED DOORS)		BK	ZER

Hardware Group No.203G

For use on Door #(s):

2053

Provide each SGL door(s) with the following:

QTY		DESCRIPTION	CATALOG NUMBER		FINISH	MFR
3	EA	HINGE	5BB1 4.5 X 4.5		652	IVE
1	EA	STOREROOM LOCK	ND80HD RHO		626	SCH
1	EA	SFIC EVEREST CORE	80-037		626	SCH
1	EA	WALL STOP	WS406/407CCV		630	IVE
1	EA	GASKETING	188S PSA H & J		BK	ZER
1	EA	DOOR BOTTOM	364AA-Z49 LENGTH AS REQ		AA	ZER

-EXTRA GASKETING FOR SOUND REDUCTION

Hardware Group No. 203S

For use on Door #(s):
3018 3020A

Provide each SGL door(s) with the following:

QTY		DESCRIPTION	CATALOG NUMBER		FINISH	MFR
3	EA	HINGE	5BB1 4.5 X 4.5		652	IVE
1	EA	STOREROOM LOCK	ND80HD RHO		626	SCH
1	EA	SFIC EVEREST CORE	80-037		626	SCH
1	EA	OH STOP	900S SERIES X SIZE & MOUNTING AS REQ		630	GLY
1	EA	GASKETING	188S PSA H & J (USE SILENCERS @ NON-RATED DOORS)		BK	ZER

Hardware Group No. 203W

For use on Door #(s):
B009

Provide each SGL door(s) with the following:

QTY		DESCRIPTION	CATALOG NUMBER		FINISH	MFR
3	EA	HINGE	5BB1HW 5 X 4.5		652	IVE
1	EA	STOREROOM LOCK	ND80HD RHO		626	SCH
1	EA	SFIC EVEREST CORE	80-037		626	SCH
1	EA	WALL STOP	WS406/407CCV		630	IVE
1	EA	GASKETING	188S PSA H & J (USE SILENCERS @ NON-RATED DOORS)		BK	ZER

Hardware Group No.206G

For use on Door #(s):
3001

Provide each PR door(s) with the following:

QTY		DESCRIPTION	CATALOG NUMBER		FINISH	MFR
6	EA	HINGE	5BB1 4.5 X 4.5		652	IVE
1	SET	AUTO FLUSH BOLT	FB31P/FB41P AS REQ		630	IVE
1	EA	DUST PROOF STRIKE	DP2		626	IVE
1	EA	STOREROOM LOCK	ND80HD RHO		626	SCH
1	EA	SFIC EVEREST CORE	80-037		626	SCH
1	EA	COORDINATOR	COR X FL X MB X HW PREPS X LENGTH AS REQUIRED		628	IVE
2	EA	OH STOP	900S SERIES X SIZE & MOUNTING AS REQ		630	GLY
2	EA	SURFACE CLOSER	4040XP RW/PA X MTG BRKT, SPCR & PLATE AS REQ		689	LCN
2	EA	PROTECTION PLATE	8400 10" X 1" LDW B-CS		630	IVE
1	EA	GASKETING	188S PSA H & J		BK	ZER
1	EA	MEETING STILE	328AA (2 PCS - 1 SET) HEIGHT AS REQUIRED (OMIT @ NON-RATED DOORS)		AA	ZER
2	EA	DOOR BOTTOM	364AA-Z49 LENGTH AS REQ		AA	ZER

-EXTRA GASKETING FOR SOUND REDUCTION

Hardware Group No. 207

For use on Door #(s):
B015

Provide each SGL door(s) with the following:

QTY		DESCRIPTION	CATALOG NUMBER		FINISH	MFR
3	EA	HINGE	5BB1 4.5 X 4.5		652	IVE
1	EA	STOREROOM LOCK	ND80HD RHO		626	SCH
1	EA	SFIC EVEREST CORE	80-037		626	SCH
1	EA	OH STOP	900S SERIES X SIZE & MOUNTING AS REQ		630	GLY
1	EA	SURFACE CLOSER	4040XP RW/PA X MTG BRKT, SPCR & PLATE AS REQ		689	LCN
1	EA	PROTECTION PLATE	8400 10" X 2" LDW B-CS		630	IVE
1	EA	GASKETING	188S PSA H & J (USE SILENCERS @ NON-RATED DOORS)		BK	ZER

Hardware Group No. 216

For use on Door #(s):
1063 2072 3101 3102 3111

Provide each PR door(s) with the following:

QTY		DESCRIPTION	CATALOG NUMBER		FINISH	MFR
6	EA	HINGE	5BB1 4.5 X 4.5		652	IVE
1	SET	CONST LATCHING BOLT	FB51P/FB61P AS REQ		630	IVE
1	EA	DUST PROOF STRIKE	DP2		626	IVE
1	EA	STOREROOM LOCK	ND80HD RHO		626	SCH
1	EA	SFIC EVEREST CORE	80-037		626	SCH
2	EA	OH STOP	900S SERIES X SIZE & MOUNTING AS REQ		630	GLY
1	EA	SURFACE CLOSER	4040XP RW/PA X MTG BRKT, SPCR & PLATE AS REQ		689	LCN
2	EA	PROTECTION PLATE	8400 10" X 1" LDW B-CS		630	IVE
1	EA	GASKETING	188S PSA H & J (USE SILENCERS @ NON-RATED DOORS)		BK	ZER
1	EA	MEETING STILE	328AA (2 PCS - 1 SET) HEIGHT AS REQUIRED (OMIT @ NON-RATED DOORS)		AA	ZER

Hardware Group No. 301

For use on Door #(s):
1059

Provide each SGL door(s) with the following:

QTY		DESCRIPTION	CATALOG NUMBER		FINISH	MFR
3	EA	HINGE	5BB1 4.5 X 4.5		652	IVE
1	EA	PASSAGE SET	ND10S RHO		626	SCH
1	EA	SURFACE CLOSER	4040XP RX/PA X MTG BRKT, SPCR & PLATE AS REQ		689	LCN
1	EA	PROTECTION PLATE	8400 10" X 2" LDW B-CS		630	IVE
1	EA	WALL STOP	WS406/407CCV		630	IVE
1	EA	GASKETING	188S PSA H & J (USE SILENCERS @ NON-RATED DOORS)		BLK	ZER

Hardware Group No. 303

For use on Door #(s):

1020	1022	1023	1042	1044	2034
2039	2063	2064			

Provide each SGL door(s) with the following:

QTY		DESCRIPTION	CATALOG NUMBER		FINISH	MFR
3	EA	HINGE	5BB1 4.5 X 4.5		652	IVE
1	EA	PRIVACY LOCK	ND40S RHO		626	SCH
1	EA	WALL STOP	WS406/407CCV		630	IVE
1	EA	GASKETING	188S PSA H & J (USE SILENCERS @ NON-RATED DOORS)		BK	ZER

Hardware Group No. 373
SHOWER ROOM

For use on Door #(s):
2065

Provide each SGL door(s) with the following:

QTY		DESCRIPTION	CATALOG NUMBER		FINISH	MFR
3	EA	HINGE	5BB1 4.5 X 4.5		630	IVE
1	EA	PRIVACY LOCK	ND40S RHO		626	SCH
1	EA	PROTECTION PLATE	8400 10" X 2" LDW B-CS		630	IVE
1	EA	WALL STOP	WS406/407CCV		630	IVE
1	EA	GASKETING	188S PSA H & J (USE SILENCERS @ NON-RATED DOORS)		BK	ZER

Hardware Group No.393G

For use on Door #(s):

2046A	2046B	2047A	2047B	2048A	2048B
2049A	2049B	2050A	2050B	2051A	2051B
2058A	2058B	2059A	2059B	2060A	2060B
2061A	2061B				

Provide each SGL door(s) with the following:

QTY		DESCRIPTION	CATALOG NUMBER		FINISH	MFR
3	EA	HINGE	5BB1 4.5 X 4.5		652	IVE
1	EA	HOSPITAL PRIVACY	ND44S RHO		626	SCH
1	EA	WALL STOP	WS406/407CCV		630	IVE
1	EA	GASKETING	188S PSA H & J		BK	ZER
1	EA	DOOR BOTTOM	364AA-Z49 LENGTH AS REQ		AA	ZER

-EXTRA GASKETING FOR SOUND REDUCTION

Hardware Group No. 401

For use on Door #(s):

2015	2018	2020	2022	2024	2025
2026	2028	2029	2030	2031	2032
2033	2035	2036	2037	2038	2041
2042					

Provide each SGL door(s) with the following:

QTY		DESCRIPTION	CATALOG NUMBER		FINISH	MFR
3	EA	HINGE	5BB1 4.5 X 4.5		652	IVE
1	EA	PASSAGE SET	ND10S RHO		626	SCH
1	EA	SURFACE CLOSER	4040XP RW/PA X MTG BRKT, SPCR & PLATE AS REQ		689	LCN
1	EA	PROTECTION PLATE	8400 10" X 2" LDW B-CS		630	IVE
1	EA	WALL STOP	WS406/407CCV		630	IVE
1	EA	GASKETING	188S PSA H & J (USE SILENCERS @ NON-RATED DOORS)		BK	ZER

Hardware Group No. 401G

For use on Door #(s):

~~2015~~	~~**2017**~~	~~2018~~	~~**2019**~~	~~2020~~	~~**2021**~~
~~2022~~	~~2024~~	~~2025~~	~~2026~~	~~2028~~	~~2029~~
~~2030~~	~~2031~~	~~2032~~	~~2033~~	~~2035~~	~~2036~~
~~2037~~	~~2038~~	~~2041~~	~~2042~~		

Provide each SGL door(s) with the following:

QTY		DESCRIPTION	CATALOG NUMBER		FINISH	MFR
3	EA	HINGE	5BB1 4.5 X 4.5		652	IVE
1	EA	PASSAGE SET	ND10S RHO		626	SCH
1	EA	SURFACE CLOSER	4040XP RW/PA X MTG BRKT, SPCR & PLATE AS REQ		689	LCN
1	EA	PROTECTION PLATE	8400 10" X 2" LDW B-CS		630	IVE
1	EA	GASKETING	188S PSA H & J		BK	ZER
1	EA	DOOR BOTTOM	364AA-Z49 LENGTH AS REQ		AA	ZER

-EXTRA GASKETING FOR SOUND REDUCTION

Hardware Group No. 403

For use on Door #(s):

2023 **B003B**

Provide each SGL door(s) with the following:

QTY		DESCRIPTION	CATALOG NUMBER		FINISH	MFR
3	EA	HINGE	5BB1 4.5 X 4.5		652	IVE
1	EA	PASSAGE SET	ND10S RHO		626	SCH
1	EA	WALL STOP	WS406/407CCV		630	IVE
1	EA	GASKETING	188S PSA H & J (USE SILENCERS @ NON-RATED DOORS)		BK	ZER

Hardware Group No. 403G

For use on Door #(s):

~~1012~~	1037A	1037B	1056A	1056B	~~1059~~
~~1066~~	~~1067~~	2055A	2055B	~~2066A~~	~~2066B~~
~~2078~~	~~3021~~	~~3022~~	~~3027~~	~~3039~~	

Provide each SGL door(s) with the following:

QTY		DESCRIPTION	CATALOG NUMBER		FINISH	MFR
3	EA	HINGE	5BB1 4.5 X 4.5		652	IVE
1	EA	PASSAGE SET	ND10S RHO		626	SCH
1	EA	WALL STOP	WS406/407CCV		630	IVE
1	EA	GASKETING	188S PSA H & J		BK	ZER
1	EA	DOOR BOTTOM	364AA-Z49 LENGTH AS REQ		AA	ZER

-GASKETING FOR ACOUSTICAL PROPERTIES

Hardware Group No. 406

For use on Door #(s):
2076

Provide each PR door(s) with the following:

QTY		DESCRIPTION	CATALOG NUMBER		FINISH	MFR
6	EA	HINGE	5BB1 4.5 X 4.5		652	IVE
1	SET	AUTO FLUSH BOLT	FB31P/FB41P AS REQ		630	IVE
1	EA	DUST PROOF STRIKE	DP2		626	IVE
1	EA	PASSAGE SET	ND10S RHO		626	SCH
1	EA	COORDINATOR	COR X FL X MB X HW PREPS X LENGTH AS REQUIRED		628	IVE
2	EA	OH STOP	900S SERIES X SIZE & MOUNTING AS REQ		630	GLY
2	EA	SURFACE CLOSER	4040XP RW/PA X MTG BRKT, SPCR & PLATE AS REQ		689	LCN
2	EA	PROTECTION PLATE	8400 10" X 1" LDW B-CS		630	IVE
1	EA	GASKETING	188S PSA H & J (USE SILENCERS @ NON-RATED DOORS)		BK	ZER
1	EA	MEETING STILE	328AA (2 PCS - 1 SET) HEIGHT AS REQUIRED (OMIT @ NON-RATED DOORS)		AA	ZER

Hardware Group No. 406G

For use on Door #(s):
~~3001~~

Provide each PR door(s) with the following:

QTY		DESCRIPTION	CATALOG NUMBER		FINISH	MFR
6	EA	HINGE	5BB1 4.5 X 4.5		652	IVE
1	SET	AUTO FLUSH BOLT	FB31P/FB41P AS REQ		630	IVE
1	EA	DUST PROOF STRIKE	DP2		626	IVE
1	EA	PASSAGE SET	ND10S RHO		626	SCH
1	EA	COORDINATOR	COR X FL X MB X HW PREPS X LENGTH AS REQUIRED		628	IVE
2	EA	OH STOP	900S SERIES X SIZE & MOUNTING AS REQ		630	GLY
2	EA	SURFACE CLOSER	4040XP RW/PA X MTG BRKT, SPCR & PLATE AS REQ		689	LCN
2	EA	PROTECTION PLATE	8400 10" X 1" LDW B-CS		630	IVE
1	EA	GASKETING	188S PSA H & J		BK	ZER
1	EA	MEETING STILE	328AA (2 PCS - 1 SET) HEIGHT AS REQUIRED (OMIT @ NON-RATED DOORS)		AA	ZER
2	EA	DOOR BOTTOM	364AA-Z49 LENGTH AS REQ		AA	ZER

-EXTRA GASKETING FOR SOUND REDUCTION

Hardware Group No. 407G

For use on Door #(s):
1013 ~~1015~~ ~~2002~~ 2011

Provide each SGL door(s) with the following:

QTY		DESCRIPTION	CATALOG NUMBER		FINISH	MFR
3	EA	HINGE	5BB1 4.5 X 4.5		652	IVE
1	EA	PASSAGE SET	ND10S RHO		626	SCH
1	EA	OH STOP	900S SERIES X SIZE & MOUNTING AS REQ		630	GLY
1	EA	SURFACE CLOSER	4040XP RW/PA X MTG BRKT, SPCR & PLATE AS REQ		689	LCN
1	EA	PROTECTION PLATE	8400 10" X 2" LDW B-CS		630	IVE
1	EA	GASKETING	188S PSA H & J		BK	ZER
1	EA	DOOR BOTTOM	360AA-Z49 LENGTH AS REQ		AA	ZER

-EXTRA GASKETING FOR SOUND REDUCTION

Hardware Group No. 493G

For use on Door #(s):

~~2046A~~ ~~2046B~~ ~~2047A~~ ~~2047B~~ ~~2048A~~ ~~2048B~~
~~2049A~~ ~~2049B~~ ~~2050A~~ ~~2050B~~ ~~2051A~~ ~~2051B~~
~~2058A~~ ~~2058B~~ ~~2059A~~ ~~2059B~~ ~~2060A~~ ~~2060B~~
~~2061A~~ ~~2061B~~

Provide each SGL door(s) with the following:

QTY		DESCRIPTION	CATALOG NUMBER		FINISH	MFR
3	EA	HINGE	5BB1 4.5 X 4.5		652	IVE
1	EA	PASSAGE SET	ND10S RHO		626	SCH
1	EA	WALL STOP	WS406/407CCV		630	IVE
1	EA	GASKETING	188S PSA H & J		BK	ZER
1	EA	DOOR BOTTOM	364AA-Z49 LENGTH AS REQ		AA	ZER

-EXTRA GASKETING FOR SOUND REDUCTION

Hardware Group No. 493GSW

For use on Door #(s):

1047

Provide each SGL door(s) with the following:

QTY		DESCRIPTION	CATALOG NUMBER		FINISH	MFR
3	EA	HINGE	5BB1 5 X 4.5		652	IVE
1	EA	PASSAGE SET	ND10S RHO		626	SCH
1	EA	OH STOP	100S SERIES X SIZE & MOUNTING AS REQ		630	GLY
1	EA	GASKETING	188S PSA H & J		BK	ZER
1	EA	DOOR BOTTOM	364AA-Z49 LENGTH AS REQ		AA	ZER

-EXTRA GASKETING FOR SOUND REDUCTION

Hardware Group No. 501

For use on Door #(s):

~~2006B~~ ~~3002~~ ~~3008B~~ ~~3034~~ 3094

Provide each SGL door(s) with the following:

QTY		DESCRIPTION	CATALOG NUMBER		FINISH	MFR
3	EA	HINGE	5BB1 4.5 X 4.5		652	IVE
1	EA	CLASSROOM LOCK	ND70HD RHO		626	SCH
1	EA	SFIC EVEREST CORE	80-037		626	SCH
1	EA	SURFACE CLOSER	4040XP RW/PA X MTG BRKT, SPCR & PLATE AS REQ		689	LCN
1	EA	PROTECTION PLATE	8400 10" X 2" LDW B-CS		630	IVE
1	EA	WALL STOP	WS406/407CCV		630	IVE
1	EA	GASKETING	188S PSA H & J (USE SILENCERS @ NON-RATED DOORS)		BK	ZER

Hardware Group No. 503

For use on Door #(s):

~~3040~~ ~~B003B~~ ~~B005~~

Provide each SGL door(s) with the following:

QTY		DESCRIPTION	CATALOG NUMBER		FINISH	MFR
3	EA	HINGE	5BB1 4.5 X 4.5		652	IVE
1	EA	CLASSROOM LOCK	ND70HD RHO		626	SCH
1	EA	SFIC EVEREST CORE	80-037		626	SCH
1	EA	WALL STOP	WS406/407CCV		630	IVE
1	EA	GASKETING	188S PSA H & J (USE SILENCERS @ NON-RATED DOORS)		BK	ZER

Hardware Group No. 503G

For use on Door #(s):

~~2016~~ ~~2053~~ ~~2056A~~ ~~2056B~~ ~~3091A~~ ~~3091B~~

Provide each SGL door(s) with the following:

QTY		DESCRIPTION	CATALOG NUMBER		FINISH	MFR
3	EA	HINGE	5BB1 4.5 X 4.5		652	IVE
1	EA	CLASSROOM LOCK	ND70HD RHO		626	SCH
1	EA	SFIC EVEREST CORE	80-037		626	SCH
1	EA	WALL STOP	WS406/407CCV		630	IVE
1	EA	GASKETING	188S PSA H & J		BK	ZER
1	EA	DOOR BOTTOM	364AA-Z49 LENGTH AS REQ		AA	ZER

-EXTRA GASKETING FOR SOUND REDUCTION

Hardware Group No. 503W

For use on Door #(s):

~~B009~~

Provide each SGL door(s) with the following:

QTY		DESCRIPTION	CATALOG NUMBER		FINISH	MFR
3	EA	HINGE	5BB1HW 5 X 4.5		652	IVE
1	EA	CLASSROOM LOCK	ND70HD RHO		626	SCH
1	EA	SFIC EVEREST CORE	80-037		626	SCH
1	EA	WALL STOP	WS406/407CCV		630	IVE
1	EA	GASKETING	188S PSA H & J (USE SILENCERS @ NON-RATED DOORS)		BK	ZER

Hardware Group No. 507

For use on Door #(s):
~~B015~~

Provide each SGL door(s) with the following:

QTY		DESCRIPTION	CATALOG NUMBER		FINISH	MFR
3	EA	HINGE	5BB1 4.5 X 4.5		652	IVE
1	EA	CLASSROOM LOCK	ND70HD RHO		626	SCH
1	EA	SFIC EVEREST CORE	80-037		626	SCH
1	EA	OH STOP	900S SERIES X SIZE & MOUNTING AS REQ		630	GLY
1	EA	SURFACE CLOSER	4040XP RW/PA X MTG BRKT, SPCR & PLATE AS REQ		689	LCN
1	EA	PROTECTION PLATE	8400 10" X 2" LDW B-CS		630	IVE
1	EA	GASKETING	188S PSA H & J (USE SILENCERS @ NON-RATED DOORS)		BK	ZER

Hardware Group No. 700C

For use on Door #(s):
2006A 2043

Provide each PR door(s) with the following:

QTY		DESCRIPTION	CATALOG NUMBER		FINISH	MFR
6	EA	HINGE	5BB1HW 4.5 X 4.5		652	IVE
2	EA	PANIC HARDWARE	9847-L-LBR-17 (WDC @ WD) LENGTH & HEIGHT AS REQ		626	VON
1	EA	SFIC EVEREST CORE	80-037		626	SCH
1	EA	SFIC RIM CYLINDER	80-159 W/CONST. CORE		626	SCH
2	EA	SURFACE CLOSER	4040XP SCUSH X MTG BRKT, SPCR & PLATE AS REQ		689	LCN
2	EA	PROTECTION PLATE	8400 10" X 1" LDW B-CS		630	IVE
2	EA	SILENCER	SR64		GRY	IVE

Hardware Group No. 701

For use on Door #(s):
2006B ~~3051~~

Provide each SGL door(s) with the following:

QTY		DESCRIPTION	CATALOG NUMBER		FINISH	MFR
3	EA	HINGE	5BB1HW 4.5 X 4.5		652	IVE
1	EA	PANIC HARDWARE	98-L-17 LENGTH AS REQ		626	VON
1	EA	SFIC EVEREST CORE	80-037		626	SCH
1	EA	SFIC RIM CYLINDER	80-159 W/CONST. CORE		626	SCH
1	EA	SURFACE CLOSER	4040XP RW/PA X MTG BRKT, SPCR & PLATE AS REQ		689	LCN
1	EA	PROTECTION PLATE	8400 10" X 2" LDW B-CS		630	IVE
1	EA	WALL STOP	WS406/407CCV		630	IVE
3	EA	SILENCER	SR64		GRY	IVE

Hardware Group No. 701CG

For use on Door #(s):
1009A 1009C 3110A

Provide each SGL door(s) with the following:

QTY		DESCRIPTION	CATALOG NUMBER		FINISH	MFR
3	EA	HINGE	5BB1HW 4.5 X 4.5		652	IVE
1	EA	PANIC HARDWARE	98-L-17 LENGTH AS REQ		626	VON
1	EA	SFIC EVEREST CORE	80-037		626	SCH
1	EA	SFIC RIM CYLINDER	80-159 W/CONST. CORE		626	SCH
1	EA	SURFACE CLOSER	4040XP SCUSH X MTG BRKT, SPCR & PLATE AS REQ		689	LCN
1	EA	PROTECTION PLATE	8400 10" X 2" LDW B-CS		630	IVE
1	EA	GASKETING	188S PSA H & J		BK	ZER
1	EA	DOOR BOTTOM	364AA-Z49 LENGTH AS REQ		AA	ZER

-EXTRA GASKETING FOR SOUND REDUCTION

Hardware Group No. 701G

For use on Door #(s):

1011A	1011B	1026A	1026B	3006A	3006C
3106A	3106B	3110B			

Provide each SGL door(s) with the following:

QTY		DESCRIPTION	CATALOG NUMBER		FINISH	MFR
3	EA	HINGE	5BB1HW 4.5 X 4.5		652	IVE
1	EA	PANIC HARDWARE	98-L-17 LENGTH AS REQ		626	VON
1	EA	SFIC EVEREST CORE	80-037		626	SCH
1	EA	SFIC RIM CYLINDER	80-159 W/CONST. CORE		626	SCH
1	EA	SURFACE CLOSER	4040XP RW/PA X MTG BRKT, SPCR & PLATE AS REQ		689	LCN
1	EA	PROTECTION PLATE	8400 10" X 2" LDW B-CS		630	IVE
1	EA	WALL STOP	WS406/407CCV		630	IVE
1	EA	GASKETING	188S PSA H & J		BK	ZER
1	EA	DOOR BOTTOM	364AA-Z49 LENGTH AS REQ		AA	ZER

-EXTRA GASKETING FOR SOUND REDUCTION

Hardware Group No. 701GW

For use on Door #(s):

1009B	3006B

Provide each SGL door(s) with the following:

QTY		DESCRIPTION	CATALOG NUMBER		FINISH	MFR
3	EA	HINGE	5BB1HW 5 X 4.5		652	IVE
1	EA	PANIC HARDWARE	98-L-17 LENGTH AS REQ		626	VON
1	EA	SFIC EVEREST CORE	80-037		626	SCH
1	EA	SFIC RIM CYLINDER	80-159 W/CONST. CORE		626	SCH
1	EA	SURFACE CLOSER	4040XP RW/PA X MTG BRKT, SPCR & PLATE AS REQ		689	LCN
1	EA	PROTECTION PLATE	8400 10" X 2" LDW B-CS		630	IVE
1	EA	WALL STOP	WS406/407CCV		630	IVE
1	EA	GASKETING	188S PSA H & J		BK	ZER
1	EA	DOOR BOTTOM	364AA-Z49 LENGTH AS REQ		AA	ZER

-EXTRA GASKETING FOR SOUND REDUCTION

Hardware Group No. 708R

For use on Door #(s):
~~B010B~~

Provide each PR door(s) with the following:

QTY		DESCRIPTION	CATALOG NUMBER		FINISH	MFR
6	EA	HINGE	5BB1HW 4.5 X 4.5		652	IVE
2	EA	FIRE EXIT HARDWARE	9847-L-F-LBR-17 (WDC @ WD) LENGTH & HEIGHT AS REQ		626	VON
1	EA	SFIC EVEREST CORE	80-037		626	SCH
1	EA	SFIC RIM CYLINDER	80-159 W/CONST. CORE		626	SCH
2	EA	SURFACE CLOSER	4040XP RW/PA X MTG BRKT, SPCR & PLATE AS REQ		689	LCN
2	EA	PROTECTION PLATE	8400 10" X 1" LDW B-CS		630	IVE
2	EA	FIRE/LIFE WALL MAG	SEM7800 SERIES AS REQUIRED		689	LCN
1	EA	GASKETING	188S PSA H & J		BK	ZER
1	EA	MEETING STILE	328AA (2 PCS - 1 SET) HEIGHT AS REQUIRED		AA	ZER

-Wire the magnetic hold opens to the fire alarm system.
-The magnetic hold opens are to release upon activation of the fire alarms system.

Hardware Group No. 711C

For use on Door #(s):
~~3014~~

Provide each SGL door(s) with the following:

QTY		DESCRIPTION	CATALOG NUMBER		FINISH	MFR
3	EA	HINGE	5BB1HW 4.5 X 4.5		652	IVE
1	EA	PANIC HARDWARE	98-L-NL LENGTH AS REQ		626	VON
1	EA	SFIC EVEREST CORE	80-037		626	SCH
1	EA	SFIC RIM CYLINDER	80-159 W/CONST. CORE		626	SCH
1	EA	SURFACE CLOSER	4040XP SCUSH X MTG BRKT, SPCR & PLATE AS REQ		689	LCN
1	EA	PROTECTION PLATE	8400 10" X 2" LDW B-CS		630	IVE
3	EA	SILENCER	SR64		GRY	IVE

Hardware Group No. 711CR

For use on Door #(s):
B020

Provide each SGL door(s) with the following:

QTY		DESCRIPTION	CATALOG NUMBER		FINISH	MFR
3	EA	HINGE	5BB1HW 4.5 X 4.5		652	IVE
1	EA	FIRE EXIT HARDWARE	98-L-NL-F LENGTH AS REQ		626	VON
1	EA	SFIC EVEREST CORE	80-037		626	SCH
1	EA	SFIC RIM CYLINDER	80-159 W/CONST. CORE		626	SCH
1	EA	SURFACE CLOSER	4040XP SCUSH X MTG BRKT, SPCR & PLATE AS REQ		689	LCN
1	EA	PROTECTION PLATE	8400 10" X 2" LDW B-CS		630	IVE
1	EA	GASKETING	188S PSA H & J		BK	ZER

Hardware Group No. 711CRW

For use on Door #(s):
B019A B019B

Provide each SGL door(s) with the following:

QTY		DESCRIPTION	CATALOG NUMBER		FINISH	MFR
3	EA	HINGE	5BB1HW 5 X 4.5		652	IVE
1	EA	FIRE EXIT HARDWARE	98-L-NL-F LENGTH AS REQ		626	VON
1	EA	SFIC EVEREST CORE	80-037		626	SCH
1	EA	SFIC RIM CYLINDER	80-159 W/CONST. CORE		626	SCH
1	EA	SURFACE CLOSER	4040XP SCUSH X MTG BRKT, SPCR & PLATE AS REQ		689	LCN
1	EA	PROTECTION PLATE	8400 10" X 2" LDW B-CS		630	IVE
1	EA	GASKETING	188S PSA H & J		BK	ZER

Hardware Group No. 715A

For use on Door #(s):
1001B

Provide each SGL door(s) with the following:

QTY		DESCRIPTION	CATALOG NUMBER		FINISH	MFR
1	EA	CONT. HINGE	112XY HEIGHT AS REQ		628	IVE
1	EA	PANIC HARDWARE	35A-NL-OP LENGTH AS REQ		626	VON
1	EA	SFIC EVEREST CORE	80-037		626	SCH
1	EA	SFIC RIM CYLINDER	80-159 W/CONST. CORE		626	SCH
1	EA	90 DEG OFFSET PULL	8190-O 10"		630	IVE
1	EA	SURFACE CLOSER	4040XP SCUSH X MTG BRKT, SPCR & PLATE AS REQ		689	LCN
1	SET	SEAL	PERIMETER SEAL BY FRAME MANUFACTURER			
1	EA	DOOR SWEEP	8198AA LENGTH AS REQ		AA	ZER
1	EA	THRESHOLD	65A LENGTH AS REQ		A	ZER

Hardware Group No. 725R

For use on Door #(s):
1029

Provide each SGL door(s) with the following:

QTY		DESCRIPTION	CATALOG NUMBER		FINISH	MFR
3	EA	HINGE	5BB1HW 4.5 X 4.5 NRP		630	IVE
1	EA	FIRE EXIT HARDWARE	98-EO-F LENGTH AS REQ		626	VON
1	EA	SURFACE CLOSER	4040XP SCUSH X MTG BRKT, SPCR & PLATE AS REQ		689	LCN
1	EA	PROTECTION PLATE	8400 10" X 2" LDW B-CS		630	IVE
1	EA	RAIN DRIP	142A DW + 4"		AA	ZER
1	EA	GASKETING	188S PSA H & J		BK	ZER
1	EA	GASKETING	328AA H & J		AA	ZER
1	EA	DOOR SWEEP	8198AA LENGTH AS REQ		AA	ZER
1	EA	THRESHOLD	65A LENGTH AS REQ		A	ZER

Hardware Group No. 725RW

For use on Door #(s):
1068B B011B B029B

Provide each SGL door(s) with the following:

QTY		DESCRIPTION	CATALOG NUMBER		FINISH	MFR
3	EA	HINGE	5BB1HW 5 X 4.5 NRP		630	IVE
1	EA	FIRE EXIT HARDWARE	98-EO-F LENGTH AS REQ		626	VON
1	EA	SURFACE CLOSER	4040XP SCUSH X MTG BRKT, SPCR & PLATE AS REQ		689	LCN
1	EA	PROTECTION PLATE	8400 10" X 2" LDW B-CS		630	IVE
1	EA	RAIN DRIP	142A DW + 4"		AA	ZER
1	EA	GASKETING	188S PSA H & J		BK	ZER
1	EA	GASKETING	328AA H & J		AA	ZER
1	EA	DOOR SWEEP	8198AA LENGTH AS REQ		AA	ZER
1	EA	THRESHOLD	65A LENGTH AS REQ		A	ZER

Hardware Group No. 728DX

For use on Door #(s):
B001

Provide each PR door(s) with the following:

QTY		DESCRIPTION	CATALOG NUMBER		FINISH	MFR
6	EA	HINGE	5BB1HW 4.5 X 4.5		652	IVE
2	EA	PANIC HARDWARE	LD-9847-EO-LBR (WDC @ WD) LENGTH & HEIGHT AS REQ		626	VON
2	EA	SURFACE CLOSER	4040XPT DE X MTG BRKT, SPCR & PLATE AS REQ (MAX REV 2 11/16")		689	LCN
2	EA	PROTECTION PLATE	8400 10" X 1" LDW B-CS		630	IVE
2	EA	FIRE/LIFE WALL MAG	SEM7800 SERIES AS REQUIRED	✓	689	LCN
2	EA	SILENCER	SR64		GRY	IVE

-Wire the magnetic hold opens to the fire alarm system.
-The magnetic hold opens are to release upon activation of the fire alarms system.

Hardware Group No. 731

For use on Door #(s):
2052B 2057B 3051

Provide each SGL door(s) with the following:

QTY		DESCRIPTION	CATALOG NUMBER		FINISH	MFR
3	EA	HINGE	5BB1HW 4.5 X 4.5		652	IVE
1	EA	PANIC HARDWARE	98-L-BE-17 LENGTH AS REQ		626	VON
1	EA	SURFACE CLOSER	4040XP RW/PA X MTG BRKT, SPCR & PLATE AS REQ		689	LCN
1	EA	PROTECTION PLATE	8400 10" X 2" LDW B-CS		630	IVE
1	EA	WALL STOP	WS406/407CCV		630	IVE
3	EA	SILENCER	SR64		GRY	IVE

Hardware Group No. 731CR

For use on Door #(s):
B029A

Provide each SGL door(s) with the following:

QTY		DESCRIPTION	CATALOG NUMBER		FINISH	MFR
3	EA	HINGE	5BB1HW 4.5 X 4.5		652	IVE
1	EA	FIRE EXIT HARDWARE	98-L-BE-F-17 LENGTH AS REQ		626	VON
1	EA	SURFACE CLOSER	4040XP SCUSH X MTG BRKT, SPCR & PLATE AS REQ		689	LCN
1	EA	PROTECTION PLATE	8400 10" X 2" LDW B-CS		630	IVE
1	EA	GASKETING	188S PSA H & J		BK	ZER

Hardware Group No. 738R

For use on Door #(s):

B010B

Provide each PR door(s) with the following:

QTY		DESCRIPTION	CATALOG NUMBER		FINISH	MFR
6	EA	HINGE	5BB1HW 4.5 X 4.5		652	IVE
2	EA	FIRE EXIT HARDWARE	9847-L-BE-F-LBR-17 (WDC @ WD) LENGTH & HEIGHT AS REQ		626	VON
2	EA	SURFACE CLOSER	4040XP RW/PA X MTG BRKT, SPCR & PLATE AS REQ		689	LCN
2	EA	PROTECTION PLATE	8400 10" X 1" LDW B-CS		630	IVE
2	EA	FIRE/LIFE WALL MAG	SEM7800 SERIES AS REQUIRED	✓	689	LCN
1	EA	GASKETING	188S PSA H & J		BK	ZER
1	EA	MEETING STILE	328AA (2 PCS - 1 SET) HEIGHT AS REQUIRED		AA	ZER

-Wire the magnetic hold opens to the fire alarm system.
-The magnetic hold opens are to release upon activation of the fire alarms system.

Hardware Group No. 801

For use on Door #(s):

1018	1019	1057	1058	2069	2070
3105	3109	B023	B025		

Provide each SGL door(s) with the following:

QTY		DESCRIPTION	CATALOG NUMBER	FINISH	MFR
3	EA	HINGE	5BB1HW 4.5 X 4.5	652	IVE
1	EA	PUSH PLATE	8200 4" X 16"	630	IVE
1	EA	PULL PLATE	8303 CTC10" 4"X16"	630	IVE
1	EA	SURFACE CLOSER	4040XP RW/PA X MTG BRKT, SPCR & PLATE AS REQ	689	LCN
1	EA	PROTECTION PLATE	8400 10" X 2" LDW B-CS	630	IVE
1	EA	WALL STOP	WS406/407CCV	630	IVE
3	EA	SILENCER	SR64	GRY	IVE

Hardware Group No. A710A

For use on Door #(s):
1000B

Provide each PR door(s) with the following:

QTY		DESCRIPTION	CATALOG NUMBER		FINISH	MFR
2	EA	CONT. HINGE	112XY EPT HEIGHT AS REQ		628	IVE
2	EA	POWER TRANSFER	EPT10 CON		689	VON
1	EA	ELEC PANIC HARDWARE	RX-QEL-3547A-EO-LBR-CON LENGTH & HEIGHT AS REQ		626	VON
1	EA	ELEC PANIC HARDWARE	RX-QEL-3547A-NL-OP-LBR-CON LENGTH & HEIGHT AS REQ		626	VON
1	EA	SFIC EVEREST CORE	80-037		626	SCH
1	EA	SFIC RIM CYLINDER	80-159 W/CONST. CORE		626	SCH
2	EA	90 DEG OFFSET PULL	8190-O 10"		630	IVE
2	EA	SURF. AUTO OPERATOR	AUTOMATIC OPENERS BY ANOTHER SECTION		ANCLR	LCN
2	EA	ACTUATOR, WALL MOUNT	ACTUATOR(S) BY ANOTHER SECTION		630	LCN
2	EA	WALL STOP	WS406/407CCV		630	IVE
1	SET	SEAL	PERIMETER SEAL BY FRAME MANUFACTURER			
1	SET	ASTRAGAL	MEETING STILE SEAL BY DOOR MANUFACTURER			
2	EA	HARNESS (IN DOOR)	ALLEGION CONNECT TYPE & LENGTH AS REQ			SCH
2	EA	HARNESS (TO POWER SUPPLY)	CON-6P (CONNECTION LEADS)			SCH
2	EA	DOOR CONTACT	679-05 TYPE AS REQ		WHT	SCE
1	EA	POWER SUPPLY	PS902 900-4RL 120/240 VAC (Coordinate power supplies with security prior to submittal. Omit where provided by security)			VON

-INGRESS BY THE ACTUATOR OR KEY OVERRIDE.
-EGRESS BY THE ACTUATOR OR THE PUSH PADS.
-THE ELECTRIFIED LATCH BOLTS WILL BE SEQUENCED WITH THE AUTOMATIC OPENERS AND RETRACT PRIOR TO THE AUTOMATIC OPENERS ACTIVATING.

Hardware Group No. AC714A

For use on Door #(s):
1000A

Provide each PR door(s) with the following:

QTY		DESCRIPTION	CATALOG NUMBER			FINISH	MFR
2	EA	CONT. HINGE	112XY EPT HEIGHT AS REQ			628	IVE
2	EA	POWER TRANSFER	EPT10 CON		✓	689	VON
1	EA	ELEC PANIC HARDWARE	RX-QEL-3547A-EO-CON LENGTH & HEIGHT AS REQ		✓	626	VON
1	EA	ELEC PANIC HARDWARE	RX-QEL-3547A-NL-OP-CON LENGTH & HEIGHT AS REQ		✓	626	VON
1	EA	SFIC EVEREST CORE	80-037			626	SCH
1	EA	SFIC RIM CYLINDER	80-159 W/CONST. CORE			626	SCH
2	EA	90 DEG OFFSET PULL	8190-O 10"			630	IVE
2	EA	SURF. AUTO OPERATOR	AUTOMATIC OPENERS BY ANOTHER SECTION		✓	ANCLR	LCN
1	EA	ACTUATOR, WALL MOUNT	ACTUATOR(S) BY ANOTHER SECTION		✓	630	LCN
1	SET	SEAL	PERIMETER SEAL BY FRAME MANUFACTURER				
1	SET	ASTRAGAL	MEETING STILE SEAL BY DOOR MANUFACTURER				
2	EA	DOOR SWEEP	8198AA LENGTH AS REQ			AA	ZER
1	EA	THRESHOLD	65A LENGTH AS REQ			A	ZER
2	EA	HARNESS (IN DOOR)	ALLEGION CONNECT TYPE & LENGTH AS REQ				SCH
2	EA	HARNESS (TO POWER SUPPLY)	CON-6P (CONNECTION LEADS)				SCH
1	EA	CREDENTIAL READER	CREDENTIAL READER BY ANOTHER SECTION				
2	EA	DOOR CONTACT	679-05 TYPE AS REQ		✓	WHT	SCE
1	EA	POWER SUPPLY	POWER SUPPLY FOR CARD READER BY ANOTHER SECTION				
1	EA	POWER SUPPLY	PS902 900-4RL 120/240 VAC (Coordinate power supplies with security prior to submittal. Omit where provided by security)		✓		VON

-Ingress by the card reader or key override.
-Egress by the actuator or the push pads.
-The electrified latch bolts will be sequenced with the automatic openers and retract prior to the automatic openers activating.

Hardware Group No. AD01

For use on Door #(s):

1002	1034	1035	1038	1049	1050
1053	3025	B008			

Provide each SL door(s) with the following:

QTY		DESCRIPTION	CATALOG NUMBER	FINISH	MFR
1	EA	SLIDING DOOR	EXAMSLIDE SYSTEM, SECTION 08 34 00		ADS

-AD SYSTEMS EXAMSLIDE
-DOOR, FRAME AND HARDWARE PROVIDED AS COMPLETE PACKAGE

Hardware Group No. C295

For use on Door #(s):
~~4000~~

Provide each SGL door(s) with the following:

QTY		DESCRIPTION	CATALOG NUMBER			FINISH	MFR
2	EA	HINGE	5BB1HW 4.5 X 4.5 NRP			630	IVE
1	EA	ELECTRIC HINGE	5BB1HW 4.5 X 4.5 CON TW8		✓	630	IVE
1	EA	EU STOREROOM LOCK	ND80HDEU RHO RX (FAIL SECURE)		✓	626	SCH
1	EA	SFIC EVEREST CORE	80-037			626	SCH
1	EA	SURFACE CLOSER	4040XP SCUSH X MTG BRKT, SPCR & PLATE AS REQ			689	LCN
1	EA	PROTECTION PLATE	8400 10" X 2" LDW B-CS			630	IVE
1	EA	RAIN DRIP	142A DW + 4"			AA	ZER
1	EA	GASKETING	328AA H & J			AA	ZER
1	EA	DOOR SWEEP	8198AA LENGTH AS REQ			AA	ZER
1	EA	THRESHOLD	65A LENGTH AS REQ			A	ZER
1	EA	HARNESS (IN DOOR)	ALLEGION CONNECT TYPE & LENGTH AS REQ				SCH
1	EA	HARNESS (TO POWER SUPPLY)	CON-6P (CONNECTION LEADS)				SCH
1	EA	CREDENTIAL READER	CREDENTIAL READER BY ANOTHER SECTION				
1	EA	DOOR CONTACT	679-05 TYPE AS REQ		✓	WHT	SCE
1	EA	POWER SUPPLY	POWER SUPPLY FOR CARD READER BY ANOTHER SECTION				
1	EA	POWER SUPPLY	PS902 120/240 VAC		✓	LGR	SCE

-ROOF ENTRY BY THE CARD READER OR KEY OVERRIDE.
-EGRESS BACK INTO BUILDING BY THE LEVER.
-DOOR CONTACT FOR MONITORING OPENING

Hardware Group No. C700CG

For use on Door #(s):
1060B 2073A

Provide each PR door(s) with the following:

QTY		DESCRIPTION	CATALOG NUMBER			FINISH	MFR
4	EA	HINGE	5BB1HW 4.5 X 4.5			652	IVE
2	EA	ELECTRIC HINGE	5BB1HW 4.5 X 4.5 CON TW8		✓	652	IVE
2	EA	ELEC PANIC HARDWARE	RX-9847-L-LBR-E996-17-FSE-CON (FAIL SECURE) LENGTH & HEIGHT AS REQ		✓	626	VON
1	EA	SFIC EVEREST CORE	80-037			626	SCH
1	EA	SFIC RIM CYLINDER	80-159 W/CONST. CORE			626	SCH
2	EA	SURFACE CLOSER	4040XP SCUSH X MTG BRKT, SPCR & PLATE AS REQ			689	LCN
2	EA	PROTECTION PLATE	8400 10" X 1" LDW B-CS			630	IVE
1	EA	GASKETING	188S PSA H & J			BK	ZER
2	EA	DOOR BOTTOM	364AA-Z49 LENGTH AS REQ			AA	ZER
2	EA	HARNESS (IN DOOR)	ALLEGION CONNECT TYPE & LENGTH AS REQ				SCH
2	EA	HARNESS (TO POWER SUPPLY)	CON-6P (CONNECTION LEADS)				SCH
1	EA	CREDENTIAL READER	CREDENTIAL READER BY ANOTHER SECTION				
2	EA	DOOR CONTACT	679-05 TYPE AS REQ		✓	WHT	SCE
1	EA	POWER SUPPLY	POWER SUPPLY FOR CARD READER BY ANOTHER SECTION				
1	EA	POWER SUPPLY	PS902 120/240 VAC		✓	LGR	SCE

-INGRESS BY THE CARD READER OR KEY OVERRIDE.
-EGRESS BY THE PUSH PADS.
-EXTRA GASKETING FOR SOUND REDUCTION

Hardware Group No. C700G

For use on Door #(s):
1017

Provide each PR door(s) with the following:

QTY		DESCRIPTION	CATALOG NUMBER		FINISH	MFR
4	EA	HINGE	5BB1HW 4.5 X 4.5		652	IVE
2	EA	ELECTRIC HINGE	5BB1HW 4.5 X 4.5 CON TW8		652	IVE
2	EA	ELEC PANIC HARDWARE	RX-9847-L-LBR-E996-17-FSE-CON (FAIL SECURE) LENGTH & HEIGHT AS REQ		626	VON
2	EA	SFIC EVEREST CORE	80-037		626	SCH
2	EA	SFIC RIM CYLINDER	80-159 W/CONST. CORE		626	SCH
2	EA	SURFACE CLOSER	4040XP RW/PA X MTG BRKT, SPCR & PLATE AS REQ		689	LCN
2	EA	PROTECTION PLATE	8400 10" X 1" LDW B-CS		630	IVE
2	EA	WALL STOP	WS406/407CCV		630	IVE
1	EA	GASKETING	188S PSA H & J		BK	ZER
2	EA	DOOR BOTTOM	364AA-Z49 LENGTH AS REQ		AA	ZER
2	EA	HARNESS (IN DOOR)	ALLEGION CONNECT TYPE & LENGTH AS REQ			SCH
2	EA	HARNESS (TO POWER SUPPLY)	CON-6P (CONNECTION LEADS)			SCH
1	EA	CREDENTIAL READER	CREDENTIAL READER BY ANOTHER SECTION			
2	EA	DOOR CONTACT	679-05 TYPE AS REQ		WHT	SCE
1	EA	POWER SUPPLY	POWER SUPPLY FOR CARD READER BY ANOTHER SECTION			
1	EA	POWER SUPPLY	PS902 120/240 VAC		LGR	SCE

-INGRESS BY THE CARD READER OR KEY OVERRIDE.
-EGRESS BY THE PUSH PADS.
-EXTRA GASKETING FOR SOUND REDUCTION

Hardware Group No. C701

For use on Door #(s):
2052 2057A 2073B

Provide each SGL door(s) with the following:

QTY		DESCRIPTION	CATALOG NUMBER		FINISH	MFR
2	EA	HINGE	5BB1HW 4.5 X 4.5		652	IVE
1	EA	ELECTRIC HINGE	5BB1HW 4.5 X 4.5 CON TW8		652	IVE
1	EA	ELEC PANIC HARDWARE	RX-98-L-E996-17-FSE-CON (FAIL SECURE) LENGTH AS REQ		626	VON
1	EA	SFIC EVEREST CORE	80-037		626	SCH
1	EA	SFIC RIM CYLINDER	80-159 W/CONST. CORE		626	SCH
1	EA	SURFACE CLOSER	4040XP RW/PA X MTG BRKT, SPCR & PLATE AS REQ		689	LCN
1	EA	PROTECTION PLATE	8400 10" X 2" LDW B-CS		630	IVE
1	EA	WALL STOP	WS406/407CCV		630	IVE
3	EA	SILENCER	SR64		GRY	IVE
1	EA	HARNESS (IN DOOR)	ALLEGION CONNECT TYPE & LENGTH AS REQ			SCH
1	EA	HARNESS (TO POWER SUPPLY)	CON-6P (CONNECTION LEADS)			SCH
1	EA	CREDENTIAL READER	CREDENTIAL READER BY ANOTHER SECTION			
1	EA	DOOR CONTACT	679-05 TYPE AS REQ		WHT	SCE
1	EA	POWER SUPPLY	POWER SUPPLY FOR CARD READER BY ANOTHER SECTION			
1	EA	POWER SUPPLY	PS902 120/240 VAC		LGR	SCE

-Ingress by the card reader or key override.
-Egress by the push pad.

Hardware Group No. C701G

For use on Door #(s):

1060A

Provide each SGL door(s) with the following:

QTY		DESCRIPTION	CATALOG NUMBER			FINISH	MFR
2	EA	HINGE	5BB1HW 4.5 X 4.5			652	IVE
1	EA	ELECTRIC HINGE	5BB1HW 4.5 X 4.5 CON TW8		✓	652	IVE
1	EA	ELEC PANIC HARDWARE	RX-98-L-E996-17-FSE-CON (FAIL SECURE) LENGTH AS REQ		✓	626	VON
1	EA	SFIC EVEREST CORE	80-037			626	SCH
1	EA	SFIC RIM CYLINDER	80-159 W/CONST. CORE			626	SCH
1	EA	SURFACE CLOSER	4040XP RW/PA X MTG BRKT, SPCR & PLATE AS REQ			689	LCN
1	EA	PROTECTION PLATE	8400 10" X 2" LDW B-CS			630	IVE
1	EA	WALL STOP	WS406/407CCV			630	IVE
1	EA	GASKETING	188S PSA H & J			BK	ZER
1	EA	DOOR BOTTOM	364AA-Z49 LENGTH AS REQ			AA	ZER
1	EA	HARNESS (IN DOOR)	ALLEGION CONNECT TYPE & LENGTH AS REQ				SCH
1	EA	HARNESS (TO POWER SUPPLY)	CON-6P (CONNECTION LEADS)				SCH
1	EA	CREDENTIAL READER	CREDENTIAL READER BY ANOTHER SECTION				
1	EA	DOOR CONTACT	679-05 TYPE AS REQ		✓	WHT	SCE
1	EA	POWER SUPPLY	POWER SUPPLY FOR CARD READER BY ANOTHER SECTION				
1	EA	POWER SUPPLY	PS902 120/240 VAC		✓	LGR	SCE

-INGRESS BY THE CARD READER OR KEY OVERRIDE.
-EGRESS BY THE PUSH PAD.
-EXTRA GASKETING FOR SOUND REDUCTION

Hardware Group No. C701W

For use on Door #(s):

1031A 1031B B003A B007B

Provide each SGL door(s) with the following:

QTY		DESCRIPTION	CATALOG NUMBER		FINISH	MFR
2	EA	HINGE	5BB1HW 5 X 4.5		652	IVE
1	EA	ELECTRIC HINGE	5BB1HW 5 X 4.5 CON TW8		652	IVE
1	EA	ELEC PANIC HARDWARE	RX-98-L-E996-17-FSE-CON (FAIL SECURE) LENGTH AS REQ		626	VON
1	EA	SFIC EVEREST CORE	80-037		626	SCH
1	EA	SFIC RIM CYLINDER	80-159 W/CONST. CORE		626	SCH
1	EA	SURFACE CLOSER	4040XP RW/PA X MTG BRKT, SPCR & PLATE AS REQ		689	LCN
1	EA	PROTECTION PLATE	8400 10" X 2" LDW B-CS		630	IVE
1	EA	WALL STOP	WS406/407CCV		630	IVE
3	EA	SILENCER	SR64		GRY	IVE
1	EA	HARNESS (IN DOOR)	ALLEGION CONNECT TYPE & LENGTH AS REQ			SCH
1	EA	HARNESS (TO POWER SUPPLY)	CON-6P (CONNECTION LEADS)			SCH
1	EA	CREDENTIAL READER	CREDENTIAL READER BY ANOTHER SECTION			
1	EA	DOOR CONTACT	679-05 TYPE AS REQ		WHT	SCE
1	EA	POWER SUPPLY	POWER SUPPLY FOR CARD READER BY ANOTHER SECTION			
1	EA	POWER SUPPLY	PS902 120/240 VAC		LGR	SCE

-Ingress by the card reader or key override.
-Egress by the push pad.

Hardware Group No. C708

For use on Door #(s):
2044 3000

Provide each PR door(s) with the following:

QTY		DESCRIPTION	CATALOG NUMBER		FINISH	MFR
4	EA	HINGE	5BB1HW 4.5 X 4.5		652	IVE
2	EA	ELECTRIC HINGE	5BB1HW 4.5 X 4.5 CON TW8		652	IVE
2	EA	ELEC PANIC HARDWARE	RX-9847-L-LBR-E996-17-FSE-CON (FAIL SECURE) LENGTH & HEIGHT AS REQ		626	VON
1	EA	SFIC EVEREST CORE	80-037		626	SCH
1	EA	SFIC RIM CYLINDER	80-159 W/CONST. CORE		626	SCH
2	EA	SURFACE CLOSER	4040XP RW/PA X MTG BRKT, SPCR & PLATE AS REQ		689	LCN
2	EA	PROTECTION PLATE	8400 10" X 1" LDW B-CS		630	IVE
2	EA	WALL STOP	WS406/407CCV		630	IVE
2	EA	FIRE/LIFE WALL MAG	SEM7800 SERIES AS REQUIRED		689	LCN
2	EA	SILENCER	SR64		GRY	IVE
2	EA	HARNESS (IN DOOR)	ALLEGION CONNECT TYPE & LENGTH AS REQ			SCH
2	EA	HARNESS (TO POWER SUPPLY)	CON-6P (CONNECTION LEADS)			SCH
1	EA	CREDENTIAL READER	CREDENTIAL READER BY ANOTHER SECTION			
2	EA	DOOR CONTACT	679-05 TYPE AS REQ		WHT	SCE
1	EA	POWER SUPPLY	POWER SUPPLY FOR CARD READER BY ANOTHER SECTION			
1	EA	POWER SUPPLY	PS902 120/240 VAC		LGR	SCE

-MAGNETICALLY HELD OPEN DURING CERTAIN HOURS
-WHEN DOORS ARE CLOSED, INGRESS BY THE CARD READER OR KEY OVERRIDE.
-FREE EGRESS BY THE PUSH PADS.
-WIRE THE MAGNETIC HOLD OPENS TO THE FIRE ALARM SYSTEM.
-THE MAGNETIC HOLD OPENS ARE TO RELEASE UPON ACTIVATION OF THE FIRE ALARMS SYSTEM.

Hardware Group No. C715

For use on Door #(s):
1030

Provide each SGL door(s) with the following:

QTY		DESCRIPTION	CATALOG NUMBER			FINISH	MFR
3	EA	HINGE	5BB1HW 4.5 X 4.5 NRP			630	IVE
1	EA	POWER TRANSFER	EPT10 CON		✓	689	VON
1	EA	ELEC PANIC HARDWARE	RX-QEL-98-L-NL-CON LENGTH AS REQ.		✓	626	VON
1	EA	SFIC EVEREST CORE	80-037			626	SCH
1	EA	SFIC RIM CYLINDER	80-159 W/CONST. CORE			626	SCH
1	EA	SURFACE CLOSER	4040XP SCUSH X MTG BRKT, SPCR & PLATE AS REQ			689	LCN
1	EA	PROTECTION PLATE	8400 10" X 2" LDW B-CS			630	IVE
1	EA	RAIN DRIP	142A DW + 4"			AA	ZER
1	EA	GASKETING	328AA H & J			AA	ZER
1	EA	DOOR SWEEP	8198AA LENGTH AS REQ			AA	ZER
1	EA	THRESHOLD	65A LENGTH AS REQ			A	ZER
1	EA	HARNESS (IN DOOR)	ALLEGION CONNECT TYPE & LENGTH AS REQ				SCH
1	EA	HARNESS (TO POWER SUPPLY)	CON-6P (CONNECTION LEADS)				SCH
1	EA	CREDENTIAL READER	CREDENTIAL READER BY ANOTHER SECTION				
1	EA	DOOR CONTACT	679-05 TYPE AS REQ		✓	WHT	SCE
1	EA	POWER SUPPLY	POWER SUPPLY FOR CARD READER BY ANOTHER SECTION				
1	EA	POWER SUPPLY	PS902 900-2RS 120/240 VAC (Coordinate power supplies with security prior to submittal. Omit where provided by security)		✓		VON

-Ingress by the card reader or key override.
-Egress by the push pad.

Hardware Group No. C720DR

For use on Door #(s):
B006

Provide each PR door(s) with the following:

QTY		DESCRIPTION	CATALOG NUMBER		FINISH	MFR
6	EA	HINGE	5BB1HW 4.5 X 4.5		652	IVE
1	EA	POWER TRANSFER	EPT10 CON		689	VON
1	EA	FIRE EXIT HARDWARE	9847-EO-F-LBR (WDC @ WD) LENGTH & HEIGHT AS REQ		626	VON
1	EA	ELEC FIRE EXIT HARDWARE	RX-9847-EO-F-LBR-CON (WDC @ WD) LENGTH & HEIGHT AS REQ		626	VON
1	EA	MORTISE CYLINDER	20-061 ICX W/CONST. CORE		626	SCH
1	EA	SFIC EVEREST CORE	80-037		626	SCH
1	EA	DELAYED EGRESS MAG	M490DEP MTG BRKT & VOLTAGE AS REQ		628	SCE
2	EA	SURFACE CLOSER	4040XPT DE X MTG BRKT, SPCR & PLATE AS REQ (MAX REV 2 11/16")		689	LCN
2	EA	PROTECTION PLATE	8400 10" X 1" LDW B-CS		630	IVE
2	EA	WALL STOP	WS406/407CCV		630	IVE
1	EA	GASKETING	188S PSA H & J		BK	ZER
1	EA	MEETING STILE	44STST (188S SEAL @ SMOKE DOORS) X HEIGHT AS REQ		STST	ZER
1	EA	HARNESS (IN DOOR)	ALLEGION CONNECT TYPE & LENGTH AS REQ			SCH
1	EA	HARNESS (TO POWER SUPPLY)	CON-6P (CONNECTION LEADS)			SCH
1	EA	CREDENTIAL READER	CREDENTIAL READER BY ANOTHER SECTION			
1	EA	KEY SWITCH	653-SERIES X L2 {MAGNETIC LOCK(S) RESET}		630	SCE
2	EA	DOOR CONTACT	679-05 TYPE AS REQ		WHT	SCE
1	EA	POWER SUPPLY	POWER SUPPLY FOR CARD READER BY ANOTHER SECTION			
1	EA	POWER SUPPLY	PS902 FA900 120/240 VAC (Coordinate power supplies with security prior to submittal. Omit where provided by security)		LGR	SCE

-Ingress by the card reader or delayed ingress by the push pad.
-Egress by the push pad.
-Wire the magnetic lock to the fire alarm system.
-The magnetic lock is to release upon activation of the fire alarm system.

Hardware Group No. C741RW

For use on Door #(s):

1028 1068A 2027 2079 3036 3087 B011A

Provide each SGL door(s) with the following:

QTY		DESCRIPTION	CATALOG NUMBER			FINISH	MFR
2	EA	HINGE	5BB1HW 5 X 4.5			652	IVE
1	EA	ELECTRIC HINGE	5BB1HW 5 X 4.5 CON TW8		✓	652	IVE
1	EA	ELEC FIRE EXIT HARDWARE	RX-98-L-F-E996-17-FS-CON (FAIL SAFE) LENGTH AS REQ		✓	626	VON
1	EA	SFIC EVEREST CORE	80-037			626	SCH
1	EA	SFIC RIM CYLINDER	80-159 W/CONST. CORE			626	SCH
1	EA	SURFACE CLOSER	4040XP RW/PA X MTG BRKT, SPCR & PLATE AS REQ Mount the closer on the least public side of the door.			689	LCN
1	EA	PROTECTION PLATE	8400 10" X 2" LDW B-CS			630	IVE
1	EA	WALL STOP	WS406/407CCV			630	IVE
1	EA	GASKETING	188S PSA H & J			BK	ZER
1	EA	HARNESS (IN DOOR)	ALLEGION CONNECT TYPE & LENGTH AS REQ				SCH
1	EA	HARNESS (TO POWER SUPPLY)	CON-6P (CONNECTION LEADS)				SCH
1	EA	CREDENTIAL READER	CREDENTIAL READER BY ANOTHER SECTION				
1	EA	DOOR CONTACT	679-05 TYPE AS REQ		✓	WHT	SCE
1	EA	POWER SUPPLY	POWER SUPPLY FOR CARD READER BY ANOTHER SECTION				
1	EA	POWER SUPPLY	PS902 FA900 120/240 VAC (Coordinate power supplies with security prior to submittal. Omit where provided by security)		✓	LGR	SCE

-Ingress by the card reader or key override.
-Egress by the push pad.
-Wire the electrified trim to the fire alarm system.
-The electrified trim will become fail safe upon activation of the fire alarm system.

Hardware Group No. CE201

For use on Door #(s):

3008A	**3008B**	3010	3026	3038	3042
3112	B016				

Provide each SGL door(s) with the following:

QTY		DESCRIPTION	CATALOG NUMBER		FINISH	MFR
3	EA	HINGE	5BB1 4.5 X 4.5		652	IVE
1	EA	STOREROOM LOCK	ND80HD RHO		626	SCH
1	EA	SFIC EVEREST CORE	80-037		626	SCH
1	EA	ELECTRIC STRIKE (SGL DOOR - HMF)	LOCKNETICS NC450 (FAIL SECURE)	✓	630	VON
1	EA	LOCK GUARD	LG-1/LG-14 TYPE AS REQ.		US32D	IVE
1	EA	SURFACE CLOSER	4040XP RW/PA X MTG BRKT, SPCR & PLATE AS REQ		689	LCN
1	EA	PROTECTION PLATE	8400 10" X 2" LDW B-CS		630	IVE
1	EA	WALL STOP	WS406/407CCV		630	IVE
1	EA	GASKETING	188S PSA H & J (USE SILENCERS @ NON-RATED DOORS)		BK	ZER
1	EA	HARNESS (TO POWER SUPPLY)	CON-6P (CONNECTION LEADS)			SCH
1	EA	CREDENTIAL READER	CREDENTIAL READER BY ANOTHER SECTION			
1	EA	DOOR CONTACT	679-05 TYPE AS REQ	✓	WHT	SCE
1	EA	MOTION SENSOR	SCANII 12/24 VDC	✓	WHT	SCE
1	EA	POWER SUPPLY	POWER SUPPLY FOR CARD READER BY ANOTHER SECTION			
1	EA	POWER SUPPLY	PS902 FA900 120/240 VAC (Coordinate power supplies with security prior to submittal. Omit where provided by security)	✓	LGR	SCE

-Ingress by the card reader or key override.
-Egress by the lever.
-At fire rated doors, wire the electric strike to the fire alarm system.
-At fire rated doors, the electric strike will become fail secure upon activation of the fire alarm system.

Hardware Group No. CE201C

For use on Door #(s):

1008	1010	1062	2005	2054	2075
3005	3007	3037			

Provide each SGL door(s) with the following:

QTY		DESCRIPTION	CATALOG NUMBER		FINISH	MFR
3	EA	HINGE	5BB1 4.5 X 4.5		652	IVE
1	EA	STOREROOM LOCK	ND80HD RHO		626	SCH
1	EA	SFIC EVEREST CORE	80-037		626	SCH
1	EA	ELECTRIC STRIKE (SGL DOOR - HMF)	LOCKNETICS NC450 (FAIL SECURE)		630	VON
1	EA	LOCK GUARD	LG-1/LG-14 TYPE AS REQ.		US32D	IVE
1	EA	SURFACE CLOSER	4040XP SCUSH X MTG BRKT, SPCR & PLATE AS REQ		689	LCN
1	EA	PROTECTION PLATE	8400 10" X 2" LDW B-CS		630	IVE
1	EA	GASKETING	188S PSA H & J (USE SILENCERS @ NON-RATED DOORS)		BK	ZER
1	EA	HARNESS (TO POWER SUPPLY)	CON-6P (CONNECTION LEADS)			SCH
1	EA	CREDENTIAL READER	CREDENTIAL READER BY ANOTHER SECTION			
1	EA	DOOR CONTACT	679-05 TYPE AS REQ		WHT	SCE
1	EA	MOTION SENSOR	SCANII 12/24 VDC		WHT	SCE
1	EA	POWER SUPPLY	POWER SUPPLY FOR CARD READER BY ANOTHER SECTION			
1	EA	POWER SUPPLY	PS902 FA900 120/240 VAC (Coordinate power supplies with security prior to submittal. Omit where provided by security)		LGR	SCE

-INGRESS BY THE CARD READER OR KEY OVERRIDE.
-EGRESS BY THE LEVER.
-AT FIRE RATED DOORS, WIRE THE ELECTRIC STRIKE TO THE FIRE ALARM SYSTEM.
-AT FIRE RATED DOORS, THE ELECTRIC STRIKE WILL BECOME FAIL SECURE UPON ACTIVATION OF THE FIRE ALARM SYSTEM.

Hardware Group No. CE201G

For use on Door #(s):
1064 2010

Provide each SGL door(s) with the following:

QTY		DESCRIPTION	CATALOG NUMBER		FINISH	MFR
3	EA	HINGE	5BB1 4.5 X 4.5		652	IVE
1	EA	STOREROOM LOCK	ND80HD RHO		626	SCH
1	EA	SFIC EVEREST CORE	80-037		626	SCH
1	EA	ELECTRIC STRIKE (SGL DOOR - HMF)	LOCKNETICS NC450 (FAIL SECURE)	✓	630	VON
1	EA	LOCK GUARD	LG-1/LG-14 TYPE AS REQ.		US32D	IVE
1	EA	SURFACE CLOSER	4040XP RW/PA X MTG BRKT, SPCR & PLATE AS REQ		689	LCN
1	EA	PROTECTION PLATE	8400 10" X 2" LDW B-CS		630	IVE
1	EA	WALL STOP	WS406/407CCV		630	IVE
1	EA	GASKETING	188S PSA H & J		BK	ZER
1	EA	DOOR BOTTOM	364AA-Z49 LENGTH AS REQ		AA	ZER
1	EA	HARNESS (TO POWER SUPPLY)	CON-6P (CONNECTION LEADS)			SCH
1	EA	CREDENTIAL READER	CREDENTIAL READER BY ANOTHER SECTION			
1	EA	DOOR CONTACT	679-05 TYPE AS REQ	✓	WHT	SCE
1	EA	MOTION SENSOR	SCANII 12/24 VDC	✓	WHT	SCE
1	EA	POWER SUPPLY	POWER SUPPLY FOR CARD READER BY ANOTHER SECTION			
1	EA	POWER SUPPLY	PS902 FA900 120/240 VAC (Coordinate power supplies with security prior to submittal. Omit where provided by security)	✓	LGR	SCE

-INGRESS BY THE CARD READER OR KEY OVERRIDE.
-EGRESS BY THE LEVER.
-AT FIRE RATED DOORS, WIRE THE ELECTRIC STRIKE TO THE FIRE ALARM SYSTEM.
-AT FIRE RATED DOORS, THE ELECTRIC STRIKE WILL BECOME FAIL SECURE UPON ACTIVATION OF THE FIRE ALARM SYSTEM.
-EXTRA GASKETING FOR SOUND REDUCTION

Hardware Group No. CE201W

For use on Door #(s):
B014A B018

Provide each SGL door(s) with the following:

QTY		DESCRIPTION	CATALOG NUMBER		FINISH	MFR
3	EA	HINGE	5BB1HW 5 X 4.5		652	IVE
1	EA	STOREROOM LOCK	ND80HD RHO		626	SCH
1	EA	SFIC EVEREST CORE	80-037		626	SCH
1	EA	ELECTRIC STRIKE (SGL DOOR - HMF)	LOCKNETICS NC450 (FAIL SECURE)	✓	630	VON
1	EA	LOCK GUARD	LG-1/LG-14 TYPE AS REQ.		US32D	IVE
1	EA	SURFACE CLOSER	4040XP RW/PA X MTG BRKT, SPCR & PLATE AS REQ		689	LCN
1	EA	PROTECTION PLATE	8400 10" X 2" LDW B-CS		630	IVE
1	EA	WALL STOP	WS406/407CCV		630	IVE
1	EA	GASKETING	188S PSA H & J (USE SILENCERS @ NON-RATED DOORS)		BK	ZER
1	EA	HARNESS (TO POWER SUPPLY)	CON-6P (CONNECTION LEADS)			SCH
1	EA	CREDENTIAL READER	CREDENTIAL READER BY ANOTHER SECTION			
1	EA	DOOR CONTACT	679-05 TYPE AS REQ	✓	WHT	SCE
1	EA	MOTION SENSOR	SCANII 12/24 VDC	✓	WHT	SCE
1	EA	POWER SUPPLY	POWER SUPPLY FOR CARD READER BY ANOTHER SECTION			
1	EA	POWER SUPPLY	PS902 FA900 120/240 VAC (Coordinate power supplies with security prior to submittal. Omit where provided by security)	✓	LGR	SCE

-Ingress by the card reader or key override.
-Egress by the lever.
-At fire rated doors, wire the electric strike to the fire alarm system.
-At fire rated doors, the electric strike will become fail secure upon activation of the fire alarm system.

Hardware Group No. CE206

For use on Door #(s):
1039

Provide each PR door(s) with the following:

QTY		DESCRIPTION	CATALOG NUMBER		FINISH	MFR
5	EA	HINGE	5BB1 4.5 X 4.5		652	IVE
1	EA	ELECTRIC HINGE	5BB1 4.5 X 4.5 CON TW8		652	IVE
1	SET	AUTO FLUSH BOLT	FB31P/FB41P AS REQ		630	IVE
1	EA	DUST PROOF STRIKE	DP2		626	IVE
1	EA	STOREROOM LOCK	ND80HD RHO		626	SCH
1	EA	SFIC EVEREST CORE	80-037		626	SCH
1	EA	ELECTRIC STRIKE (PAIR DOORS)	LOCKNETICS NC450 (FAIL SECURE)		630	VON
1	EA	LOCK GUARD	LG-1/LG-14 TYPE AS REQ.		US32D	IVE
1	EA	COORDINATOR	COR X FL X MB X HW PREPS X LENGTH AS REQUIRED		628	IVE
2	EA	OH STOP	100S SERIES X SIZE & MOUNTING AS REQ		630	GLY
2	EA	SURFACE CLOSER	4040XP RW/PA X MTG BRKT, SPCR & PLATE AS REQ		689	LCN
2	EA	PROTECTION PLATE	8400 10" X 1" LDW B-CS		630	IVE
1	EA	GASKETING	188S PSA H & J (USE SILENCERS @ NON-RATED DOORS)		BK	ZER
1	EA	MEETING STILE	328AA (2 PCS - 1 SET) HEIGHT AS REQUIRED (OMIT @ NON-RATED DOORS)		AA	ZER
1	EA	HARNESS (IN DOOR)	ALLEGION CONNECT TYPE & LENGTH AS REQ			SCH
1	EA	HARNESS (TO POWER SUPPLY)	CON-6P (CONNECTION LEADS)			SCH
1	EA	CREDENTIAL READER	CREDENTIAL READER BY ANOTHER SECTION			
2	EA	DOOR CONTACT	679-05 TYPE AS REQ		WHT	SCE
1	EA	MOTION SENSOR	SCANII 12/24 VDC		WHT	SCE
1	EA	POWER SUPPLY	POWER SUPPLY FOR CARD READER BY ANOTHER SECTION			
1	EA	POWER SUPPLY	PS902 FA900 120/240 VAC (Coordinate power supplies with security prior to submittal. Omit where provided by security)		LGR	SCE

-INGRESS BY THE CARD READER OR KEY OVERRIDE.
-EGRESS BY THE LEVER.
-AT FIRE RATED DOORS, WIRE THE ELECTRIC STRIKE TO THE FIRE ALARM SYSTEM.
-AT FIRE RATED DOORS, THE ELECTRIC STRIKE WILL BECOME FAIL SECURE UPON ACTIVATION OF THE FIRE ALARM SYSTEM.

Hardware Group No. CE208

For use on Door #(s):
2045

Provide each PR door(s) with the following:

QTY		DESCRIPTION	CATALOG NUMBER			FINISH	MFR
5	EA	HINGE	5BB1 4.5 X 4.5			652	IVE
1	EA	ELECTRIC HINGE	5BB1 4.5 X 4.5 CON TW8		✓	652	IVE
1	SET	AUTO FLUSH BOLT	FB31P/FB41P AS REQ			630	IVE
1	EA	DUST PROOF STRIKE	DP2			626	IVE
1	EA	STOREROOM LOCK	ND80HD RHO			626	SCH
1	EA	SFIC EVEREST CORE	80-037			626	SCH
1	EA	ELECTRIC STRIKE (PAIR DOORS)	LOCKNETICS NC450 (FAIL SECURE)		✓	630	VON
1	EA	LOCK GUARD	LG-1/LG-14 TYPE AS REQ.			US32D	IVE
1	EA	COORDINATOR	COR X FL X MB X HW PREPS X LENGTH AS REQUIRED			628	IVE
2	EA	SURFACE CLOSER	4040XP RW/PA X MTG BRKT, SPCR & PLATE AS REQ			689	LCN
2	EA	PROTECTION PLATE	8400 10" X 1" LDW B-CS			630	IVE
2	EA	FIRE/LIFE WALL MAG	SEM7800 SERIES AS REQUIRED		✓	689	LCN
1	EA	GASKETING	188S PSA H & J (USE SILENCERS @ NON-RATED DOORS)			BK	ZER
1	EA	MEETING STILE	328AA (2 PCS - 1 SET) HEIGHT AS REQUIRED (OMIT @ NON-RATED DOORS)			AA	ZER
1	EA	HARNESS (IN DOOR)	ALLEGION CONNECT TYPE & LENGTH AS REQ				SCH
1	EA	HARNESS (TO POWER SUPPLY)	CON-6P (CONNECTION LEADS)				SCH
1	EA	CREDENTIAL READER	CREDENTIAL READER BY ANOTHER SECTION				
2	EA	DOOR CONTACT	679-05 TYPE AS REQ		✓	WHT	SCE
1	EA	MOTION SENSOR	SCANII 12/24 VDC		✓	WHT	SCE
1	EA	POWER SUPPLY	POWER SUPPLY FOR CARD READER BY ANOTHER SECTION				
1	EA	POWER SUPPLY	PS902 FA900 120/240 VAC (Coordinate power supplies with security prior to submittal. Omit where provided by security)		✓	LGR	SCE

-INGRESS BY THE CARD READER OR KEY OVERRIDE.
-EGRESS BY THE LEVER.
-AT FIRE RATED DOORS, WIRE THE ELECTRIC STRIKE TO THE FIRE ALARM SYSTEM.
-AT FIRE RATED DOORS, THE ELECTRIC STRIKE WILL BECOME FAIL SECURE UPON ACTIVATION OF THE FIRE ALARM SYSTEM.
-WIRE THE MAGNETIC HOLD OPENS TO THE FIRE ALARM SYSTEM.
-THE MAGNETIC HOLD OPENS ARE TO RELEASE UPON ACTIVATION OF THE FIRE ALARMS SYSTEM.

Hardware Group No. CE214

For use on Door #(s):
B010A

Provide each PR door(s) with the following:

QTY		DESCRIPTION	CATALOG NUMBER			FINISH	MFR
5	EA	HINGE	5BB1HW 4.5 X 4.5 NRP			630	IVE
1	EA	ELECTRIC HINGE	5BB1HW 4.5 X 4.5 CON TW8		✓	630	IVE
2	EA	MANUAL FLUSH BOLT	FB458-12"			626	IVE
1	EA	DUST PROOF STRIKE	DP2			626	IVE
1	EA	STOREROOM LOCK	ND80HD RHO			626	SCH
1	EA	SFIC EVEREST CORE	80-037			626	SCH
~~1~~	~~EA~~	~~ELECTRIC STRIKE (PAIR DOORS)~~	~~LOCKNETICS NC450 (FAIL SECURE)~~		✓	~~630~~	~~VON~~
1	EA	ELECTRIC STRIKE	6223 FSE DSLC CON 12/16/24/28 VAC/VDC		✓	630	VON
1	EA	LOCK GUARD	LG-1/LG-14 TYPE AS REQ.			US32D	IVE
1	EA	OH STOP	900S SERIES X SIZE & MOUNTING AS REQ (Inactive Leaf)			630	GLY
1	EA	SURFACE CLOSER	4040XP SCUSH X MTG BRKT, SPCR & PLATE AS REQ (Active Leaf)			689	LCN
2	EA	PROTECTION PLATE	8400 10" X 1" LDW B-CS			630	IVE
1	EA	RAIN DRIP	142A DW + 4"			AA	ZER
1	EA	GASKETING	188S PSA HEIGHT AS REQ (MOUNT ON ASTRAGAL)			BK	ZER
1	EA	MEETING STILE	328AA (2 PCS - 1 SET) HEIGHT AS REQUIRED			AA	ZER
1	EA	GASKETING	328AA H & J			AA	ZER
2	EA	DOOR SWEEP	8198AA LENGTH AS REQ			AA	ZER
1	EA	THRESHOLD	65A LENGTH AS REQ			A	ZER
1	EA	HARNESS (IN DOOR)	ALLEGION CONNECT TYPE & LENGTH AS REQ				SCH
1	EA	HARNESS (TO POWER SUPPLY)	CON-6P (CONNECTION LEADS)				SCH
1	EA	CREDENTIAL READER	CREDENTIAL READER BY ANOTHER SECTION				
2	EA	DOOR CONTACT	679-05 TYPE AS REQ		✓	WHT	SCE
1	EA	POWER SUPPLY	POWER SUPPLY FOR CARD READER BY ANOTHER SECTION				
1	EA	POWER SUPPLY	PS902 120/240 VAC		✓	LGR	SCE

-Ingress by the card reader or key override.
-Egress by the lever.

Hardware Group No.**CE295**

For use on Door #(s):

4000

Provide each SGL door(s) with the following:

QTY		DESCRIPTION	CATALOG NUMBER			FINISH	MFR
3	EA	HINGE	5BB1HW 4.5 X 4.5 NRP			630	IVE
1	EA	STOREROOM LOCK	ND80HD RHO			626	SCH
1	EA	SFIC EVEREST CORE	80-037			626	SCH
1	EA	ELECTRIC STRIKE	NC450		✓	630	
1	EA	SURFACE CLOSER	4040XP SCUSH X MTG BRKT, SPCR & PLATE AS REQ			689	LCN
1	EA	PROTECTION PLATE	8400 10" X 2" LDW B-CS			630	IVE
1	EA	RAIN DRIP	142A DW + 4"			AA	ZER
1	EA	GASKETING	328AA H & J			AA	ZER
1	EA	DOOR SWEEP	8198AA LENGTH AS REQ			AA	ZER
1	EA	THRESHOLD	65A LENGTH AS REQ			A	ZER
1	EA	CREDENTIAL READER	CREDENTIAL READER BY ANOTHER SECTION				
1	EA	DOOR CONTACT	679-05 TYPE AS REQ		✓	WHT	SCE
1	EA	POWER SUPPLY	POWER SUPPLY FOR CARD READER BY ANOTHER SECTION				
1	EA	POWER SUPPLY	PS902 120/240 VAC		✓	LGR	SCE

-ROOF ENTRY BY THE CARD READER OR KEY OVERRIDE.
-EGRESS BACK INTO BUILDING BY THE LEVER.
-DOOR CONTACT FOR MONITORING OPENING

Hardware Group No. CX710T

For use on Door #(s):
B003C B007A

Provide each PR door(s) with the following:

QTY		DESCRIPTION	CATALOG NUMBER			FINISH	MFR
8	EA	HINGE	5BB1HW 4.5 X 4.5			652	IVE
2	EA	POWER TRANSFER	EPT10 CON		✓	689	VON
1	EA	DELAYED PANIC HARDWARE	CX9847-L-DT-CON LENGTH & HEIGHT AS REQ		✓	626	VON
1	EA	DELAYED PANIC HARDWARE	CX9847-L-NL-CON LENGTH & HEIGHT AS REQ		✓	626	VON
2	EA	MORTISE CYLINDER	20-061 ICX W/CONST. CORE (CHEXIT RESET)			626	SCH
3	EA	SFIC EVEREST CORE	80-037			626	SCH
1	EA	SFIC RIM CYLINDER	80-159 W/CONST. CORE			626	SCH
2	EA	SURFACE CLOSER	4040XP RW/PA X MTG BRKT, SPCR & PLATE AS REQ			689	LCN
2	EA	PROTECTION PLATE	8400 10" X 1" LDW B-CS			630	IVE
2	EA	WALL STOP	WS406/407CCV			630	IVE
2	EA	SILENCER	SR64			GRY	IVE
2	EA	HARNESS (IN DOOR)	ALLEGION CONNECT TYPE & LENGTH AS REQ				SCH
2	EA	HARNESS (TO POWER SUPPLY)	CON-6P (CONNECTION LEADS)				SCH
1	EA	CREDENTIAL READER	CREDENTIAL READER BY ANOTHER SECTION				
2	EA	DOOR CONTACT	679-05 TYPE AS REQ		✓	WHT	SCE
1	EA	POWER SUPPLY	POWER SUPPLY FOR CARD READER BY ANOTHER SECTION				
1	EA	POWER SUPPLY	PS902 900-2RS 120/240 VAC (Coordinate power supplies with security prior to submittal. Omit where provided by security)		✓		VON

-DELAYED EGRESS
-INGRESS BY KEY
-PRESSING PUSH BAR WITHOUT USE OF CARD READER TO START 15-SECOND DELAY BEFORE EGRESS IS GRANTED, AND ALARM WILL SOUND.
-EGRESS BY THE CARD READER TO SHUNT CHEXIT'S 15-SECOND DELAY AND ALARM.
-KEYED CYLINDER NEAR PUSH PAD TO SHUNT/RESET DELAY AND ALARM.
-FREE EGRESS BY THE PUSH PAD DURING FIRE ALARM OF LOSS OF POWER.

SECTION 08 7122

AUTOMATIC DOOR OPERATORS FOR THE DISABLED

PART 1 - GENERAL

1.1 SUMMARY

A. Section Includes: Automatic door operators for swinging doors and supplementary items necessary for installation for the following:

1. Power-Assist Door Operators: For exterior and interior swinging doors for use by the disabled.

B. Related Section:

1. Division 08 Section "Automatic Entrances" for swinging doors and frames packaged with automatic door operators.
2. Division 08 Section "Interior Automatic Door Operators for Staff Use" for low-energy door operators for interior prefinished flush wood swinging doors used primarily for staff on a continuous use.

1.2 DEFINITIONS

A. AAADM: American Association of Automatic Door Manufacturers.

B. Activation Device: A control that, when actuated, sends an electrical signal to the door operator to open the door.

C. For automatic door terminology, see BHMA A156.19 for definitions of terms.

1.3 ACTION SUBMITTALS

A. Product Data: Manufacturer's technical literature for each product and system indicated.

1. Include manufacturer's specifications for materials, finishes, construction details, installation instructions, including activation devices and recommendations for maintenance.

B. Shop Drawings: Show details of fabrication and installation, including plans, elevations, sections, details of components and attachments to other work. Distinguish between shop and field-assembled work.

1. Indicate required clearances, method of field assembly, components, and location and size of each field connection.
2. Include locations and elevations of entrances showing activation and safety devices.
3. Wiring Diagrams: For power, signal, and activation- and safety-device wiring.
4. Include plans, elevations, sections, details, and attachments to other work for guide rails.

C. Samples: For each exposed product and for each color and texture specified, manufacturer's standard in size.

1.4 INFORMATIONAL SUBMITTALS

A. Manufacturer's Project Acceptance Document: Certification by the manufacturer that its product(s) are approved, acceptable, suitable for use in specific locations, for specific details, and for applications indicated, specified, or required, and that a warranty will be issued.

B. Product Test Reports: Written reports based on evaluation of comprehensive tests performed by qualified testing agency indicating that each product complies with requirements.

C. Qualification Data:

1. For firms and persons specified in "Quality Assurance" to demonstrate their capabilities and experience. Include list of completed projects.

D. Field Quality Control Reports: Written report of testing and inspection required by "Field Quality Control".

E. Warranty: Sample of warranty.

1. Provide manufacturer's written warranty covering materials and installation (labor) stating obligations, remedies, limitations and exclusions.

1.5 CLOSEOUT SUBMITTALS

A. Maintenance Data: For automatic door operators, including activation and safety devices, to include in maintenance manuals.

1.6 QUALITY ASSURANCE

A. Manufacturer Qualifications: Manufacturer with not less than 5 years of experience in the successful production and in-service performance of products and systems similar to scope of this Project.

B. Installer Qualifications:

1. Experience: Installer's personnel with not less than 5 years of experience in the successful performance of Work similar to scope of this Project.
2. Supervision: Installer shall maintain a competent supervisor at Project while the Work is in progress, and who has not less than 5 years of experience installing products and systems similar to scope of this Project.
3. Maintenance Proximity: Not more than two hours' normal travel time from Installer's place of business to Project site.

C. Certified Inspector Qualifications: Certified by the AAADM.

D. Electrical Components, Devices, and Accessories: Listed and labeled as defined in NFPA 70, by a testing agency, and marked for intended location and application.

E. Exit-Door Requirements: Comply with requirements of authorities having jurisdiction for doors with automatic door operators serving as a component of a required means of egress.

1.7 PRE-INSTALLATION CONFERENCE

A. Pre-Installation Conference: Before Work begins, conduct conference at Project site.

1.8 PROJECT CONDITIONS

A. Field Measurements: Verify actual dimensions of door frames by field measurements before fabrication of exposed covers for automatic door operators.

1.9 COORDINATION

A. Coordinate installation of products and systems with interfacing and adjoining construction to provide a successful installation without failure.

B. Templates: Obtain and distribute, to the parties involved, templates for doors, frames, operators, and other work specified to be factory prepared and reinforced for installing automatic door operators. Check Shop Drawings of other work to confirm that adequate provisions are made for locating and installing automatic door operators to comply with indicated requirements.

C. Electrical System Roughing-in: Coordinate layout and installation of automatic door operators with connections to power supplies and, where indicated, access-control system.

1.10 WARRANTY

A. Manufacturer's Warranty: Furnish manufacturer's written material and labor warranty signed by an authorized representative using manufacturer's standard form agreeing to furnish materials and labor required to repair or replace work which exhibits material defects caused by manufacture or design of product. "Defects" are defined to include but not limited to deterioration or failure to perform as required.

1. Failures include, but are not limited to, the following:

    a. Faulty or sporadic operation of automatic door operator, including activation and safety devices.
    b. Deterioration of metals, metal finishes, and other materials beyond normal use.

2. Warranty Period: Two years from date of Substantial Completion.

1.11 MAINTENANCE SERVICE

A. Initial Maintenance Service: Beginning at Substantial Completion, provide 12 months' full maintenance by skilled employees of automatic door operator Installer. Include quarterly planned and preventive maintenance, repair or replacement of worn or defective components, lubrication, cleaning, and adjusting as required for proper door operation. Provide parts and supplies the same as those used in the manufacture and installation of original equipment.

1. Engage a certified inspector to perform safety inspection after each adjustment or repair, and at end of maintenance period. Furnish completed inspection reports to Owner.
2. Perform maintenance, including emergency callback service, during normal working hours.

PART 2 - PRODUCTS

2.1 MANUFACTURERS AND PRODUCTS

A. Acceptable Manufacturers and Products: Subject to compliance with requirements of Contract Documents as judged by the Architect, provide product by one of manufacturers listed. If not listed, submit as substitution according to the Conditions of the Contract and Division 01 Section "Substitution Procedures".

B. Available Manufacturers and Products: Subject to compliance with requirements of Contract Documents as judged by the Architect, manufacturers offering products that may be incorporated into the Work include, but are not limited to, those listed.

1. Besam, Div of ASSA ABLOY Entrance Systems; SW200 Series.
2. LCN Closers; Div of Allegion plc (formerly Ingersoll-Rand); 4640 Series.
3. record USA; 6100 Series
4. Stanley Access Technologies, LLC; Magic-Force Series.

C. Source Limitations: Obtain automatic door operators, including activation devices, from single source from single manufacturer.

2.2 MATERIALS

A. Aluminum: Alloy and temper recommended by manufacturer for type of use and finish indicated, complying with standards indicated below:

1. Sheet: ASTM B 209 (ASTM B 209M).
2. Extrusions: ASTM B 221 (ASTM B 221M).

B. Fasteners and Accessories: Manufacturer's standard corrosion-resistant, nonstaining, non-bleeding fasteners and accessories compatible with adjacent materials.

2.3 AUTOMATIC DOOR OPERATORS, GENERAL

A. General: Provide operators of size recommended by manufacturer for door size, weight, and movement; for condition of exposure; for long-term, maintenance-free operation under normal traffic load for type of occupancy indicated; and complying with UL 325. Coordinate operator mechanisms with door operation, hinges, and activation and safety devices.

1. Fire-Rated Doors: Where indicated, provide door operators for fire-rated door assemblies that comply with NFPA 80 for fire-rated door components and are listed and labeled by a qualified testing agency.
2. Wind Load: At exterior doors, provide door operators that will open and close doors and maintain them in fully closed position when subjected to wind load as indicated on Drawings.

B. Hinges: See Division 08 Section "Door Hardware" for type of hinge for each door that door operator shall accommodate.

C. Cover for Surface-Mounted Operators: Fabricated from 0.125 in (3.2 mm) thick extruded or formed aluminum; manufacturer's standard width; with enclosed end caps, provision for maintenance access, and fasteners concealed when door is in closed position.

D. Brackets and Reinforcements: Manufacturer's standard, fabricated from aluminum with nonstaining, nonferrous shims for aligning system components.

E. Fire-Door Package: If indicated, provide fire-door package consisting of UL-listed latch mechanism, power-reset box, and caution signage for fire-rated doors. Latch mechanism shall allow door to swing free during automatic operation; when fire is detected, latch actuator shall cause exit hardware to latch when door closes. Provide latch actuators with fail-secure design.

F. Electrical Components, Devices, and Accessories: Listed and labeled as defined in NFPA 70, by a qualified testing agency, and marked for intended location and application.

2.4 POWER-ASSIST DOOR OPERATORS

A. Standard: BHMA A156.19.

B. Performance Requirements:

1. Opening Force:

   a. Opening Force if Power Fails: Not more than 15 lbf (67 N) required to release latch if provided, not more than 30 lbf (133 N) required to manually set door in motion, and not more than 15 lbf (67 N) required to fully open door.
   b. Accessible Interior Doors: Not more than 5 lbf (22 N) to push or pull door to fully open position.

2. Entrapment-Prevention Force: Not more than 15 lbf (67 N) required for preventing stopped door from closing or opening.

C. Configuration: Operator to control single or pair of swinging doors and as follows.

1. Traffic Pattern: Two-way.
2. Operator Mounting: Surface.

D. Operation: Power-assisted opening that reduces the force to open door and power-assisted spring closing. Pushing or pulling on door activates operator. Provide time delay for door to remain open before initiating closing cycle as required by BHMA A156.19. When not in automatic mode, door operator shall function as manual door closer, with or without electrical power.

E. Electromechanical Operating System: Self-contained unit powered by permanent-magnet dc motor; with closing speed controlled mechanically by gear train and dynamically by braking action of electric motor, connections for power and activation- and safety-device wiring, and manual operation including spring closing when power is off.

F. Microprocessor Control Unit: Solid-state controller.

G. Features:

1. Adjustable opening and closing speed.
2. Adjustable opening and closing force.
3. Adjustable backcheck.
4. Adjustable hold-open time from zero to 30 seconds.
5. Adjustable time delay.

6. Adjustable acceleration.
7. Obstructions recycle.
8. On-off/hold-open switch to control electric power to operator; key operated.

H. Exposed Finish: As specified elsewhere in this specification section.

2.5 ACTIVATION DEVICES

A. General: Provide activation devices in accordance with BHMA standards, for condition of exposure and for long-term, maintenance-free operation under normal traffic load for type of occupancy indicated. Coordinate activation and safety devices with door operation and door operator mechanisms.

B. Push-Plate Switch: Momentary-contact door control switch with flat push-plate actuator.

1. Configuration: Square push plate with 4 by 4 in (100 by 100 mm) junction box.

a. Mounting: Recess-mounted, semi-flush in wall.

2. Push-Plate Material: Stainless steel as selected by Architect from manufacturer's full range.
3. Message: International symbol of accessibility and "Push to Open."
4. Push-Plate Locations: Locate as indicated on drawings.

C. Proximity Readers: Where indicated, provide wiring, contacts, and related materials to allow for operation of door operating system by owner-provided proximity reader.

D. Electrical Interlocks: Unless units are equipped with self-protecting devices or circuits, provide electrical interlocks to prevent activation of operator when door is locked, latched, or bolted.

2.6 FABRICATION

A. Factory-fabricate automatic door operators to comply with indicated standards.

B. Fabricate exterior components to drain water passing joints and condensation and moisture occurring or migrating within operator enclosure to the exterior.

C. Form aluminum shapes before finishing.

D. Use concealed fasteners to greatest extent possible. Where exposed fasteners are required, use countersunk Phillips flat-head machine screws, finished to match operator.

E. Provide metal cladding, completely cladding visible surfaces before shipment to Project site. Fabricate cladding with concealed fasteners and connection devices, with accurately fitted joints with ends coped or mitered to produce hairline joints free of burrs and distortion, and with allowance for thermal expansion at exterior doors.

2.7 ACCESSORIES

A. Signage: As required by cited BHMA standard for the type of operator.

1. Application Process: Door manufacturer's standard process.
2. Provide sign materials with instructions for field application when operators are installed.
3. Signage with logo of manufacturer is not acceptable.

2.8 GENERAL FINISH REQUIREMENTS

A. Comply with NAAMM "Metal Finishes Manual for Architectural and Metal Products" for recommendations for applying and designating finishes.

B. Protect mechanical finishes on exposed surfaces from damage by applying a strippable, temporary protective covering before shipping.

C. Apply organic and anodic finishes to formed-metal after fabrication unless otherwise indicated.

D. Appearance of Finished Work: Noticeable variations in same piece are not acceptable. Variations in appearance of adjoining components are acceptable if they are within the range of approved Samples and are assembled or installed to minimize contrast.

2.9 ALUMINUM FINISHES

A. Door Operator Exposed Finish: Finish exposed components with finish matching door and frame specified in other specification sections and complying with appropriate requirement as follows:

1. Clear Anodic Finish: AAMA 611, AA-M12C22A31, Class II, 0.010 mm or thicker.
2. Color Anodic Finish: AAMA 611, AA-M12C22A32/A34, Class II, 0.010 mm or thicker.
3. Baked-Enamel or Powder-Coat Finish: AAMA 2603. Comply with coating manufacturer's written instructions for cleaning, conversion coating, application, and baking.

PART 3 - EXECUTION

3.1 EXAMINATION

A. Acceptance of Surfaces and Conditions: Examine substrates to receive products and systems and associated work for compliance with requirements and other conditions affecting performance. Proceed only when unsatisfactory conditions have been corrected in a manner complying with Contract Documents. Starting work within a particular area will be construed as acceptance of surface conditions.

B. Examine roughing-in for electrical systems to verify actual locations of power connections before automatic door operator installation.

C. Verify that full-height finger guards are installed at each door with pivot hinges where door has a clearance at hinge side greater than 1/4 in (6 mm) and less than 3/4 in (19 mm) with door in any position.

D. Proceed with installation only after unsatisfactory conditions have been corrected.

3.2 INSTALLATION, GENERAL

A. Installation Quality Standards: In addition to standards listed elsewhere, perform Work according to following, unless otherwise specified:

1. Respective manufacturer written installation instructions.
2. Accepted submittals.
3. Contract Documents.

B. Control of Corrosion: Prevent galvanic action and other forms of corrosion by isolating metals and other materials from direct contact with incompatible materials.

C. General: Install complete automatic door operators according to manufacturer's written instructions, including activation and safety devices, control wiring, and remote power units if any; connection to the building's power supply; and signage.

1. Do not install damaged components. Fit joints to produce hairline joints free of burrs and distortion.
2. Install operators true in alignment with established lines and door geometry without warp or rack. Anchor securely in place.
3. Low-Energy Door Operator Installation Standard: BHMA A156.19.

D. Power Connection: See Division 26 Sections for connection to electrical power distribution system.

E. Activation Devices: Install devices and wiring according to manufacturer's written instructions and cited BHMA standard for type of operator and direction of pedestrian travel. Connect activation-device wiring according to Division 26 low-voltage Section.

F. Signage: Apply on both sides of each door as required by cited BHMA standard for type of door operator and direction of pedestrian travel.

3.3 FIELD QUALITY CONTROL

A. Certified Inspector: Engage a Certified Inspector to test and inspect components, assemblies, and installations, including connections.

B. Perform the following tests and inspections:

1. Test and inspect each automatic door operator installation, using AAADM inspection forms, to determine compliance of installed systems with applicable BHMA standards.

C. Automatic door operators will be considered defective if they do not pass tests and inspections.

D. Prepare test and inspection reports.

3.4 ADJUSTING

A. Adjust automatic door operators to function smoothly, and lubricate as recommended by manufacturer; comply with requirements of applicable BHMA standards.

B. After completing installation of exposed, factory-finished automatic door operators, inspect exposed finishes on doors and operators. Repair damaged finish to match original finish.

C. Readjust automatic door operators after repeated operation of completed installation equivalent to three days' use by normal traffic (100 to 300 cycles).

D. Occupancy Adjustment: When requested within 12 months of date of Substantial Completion, provide on-site assistance in adjusting system to suit actual occupied conditions. Provide up to two visits to Project during other-than-normal occupancy hours for this purpose.

3.5 DEMONSTRATION

A. Engage a factory-authorized service representative to train Owner's maintenance personnel to adjust, operate, and maintain automatic door operators.

END OF SECTION

SECTION 08 8000

GLAZING

PART 1 - GENERAL

1.1 SUMMARY

A. Section Includes: Glass, glazing, and supplementary items necessary for installation; including glass specified in other Sections where glazing requirements are specified by reference to this Section.

B. Quality Standards - Alternate: Include alternate to provide enhanced Quality Standards for glass fabrication.

1. The Contract Documents require compliance with manufacturer/fabricator's enhanced quality standards. The emphasis of these quality standards is architectural glass that is manufactured and fabricated to standards requiring high-quality materials, fabrication and skillful workmanship to meet the aesthetic requirements of the Project.

1.2 DEFINITIONS

A. Glass Manufacturers: Firms that produce primary glass, fabricated glass, or both, as defined in referenced glazing publications.

B. Glass Thicknesses: Indicated by thickness designations in millimeters according to ASTM C 1036.

C. Interspace: Space between lites of an insulating-glass unit.

D. Deterioration of Coated Glass: Defects developed from normal use that is attributed to the manufacturing process and not to causes other than glass breakage and practices for maintaining and cleaning coated glass contrary to manufacturer's written instructions. Defects include peeling, cracking, and other indications of deterioration in metallic coating.

E. Deterioration of Insulating Glass Units: Failure of the hermetic seal under normal use that is attributed to the manufacturing process and not to causes other than glass breakage and practices for maintaining and cleaning insulating glass contrary to manufacturer's written instructions. Evidence of failure is the obstruction of vision by dust, moisture, or film on interior surfaces of glass.

1.3 DELEGATED ENGINEERING REQUIREMENTS

A. Contract Documents Design Intent: Drawings and Specifications indicate design intent for products and systems and do not necessarily indicate or specify total Work required. Contract Documents shall not be construed as an engineered design; furnish and install all Work required for a complete installation.

B. Project Glazing Analysis: Prepared by manufacturer for primary glass or fabricator for fabricated glass units. Analyze each glass type and glazing condition for thermal, wind, impact and additional design loads indicated in glass performance requirements.

1. Provide glass products in the thickness and strengths required to meet or exceed the criteria based on project loads and in-service conditions.

C. Delegated Engineering – Structural Glass and Other Applications Exceeding Project Glazing Analysis: Contractor shall employ a qualified professional engineer to provide engineering for products and systems including attachment to building structure required to meet design intent of Contract Documents.

1. Preparation of structural analysis data including engineering calculations, shop drawings and other submittals signed and sealed by the qualified professional engineer.

D. Delegated Engineering Professional Qualifications: Professional engineer legally authorized to practice in jurisdiction where Project is located and experienced in providing engineering services of kind indicated for products and systems similar to this Project and has a record of successful in-service performance.

E. Coordination of Work:

1. Product Variations: In the event of minor differences between products and systems of acceptable or available manufacturers, Contractor shall notify Architect of such differences and resolve conflicts in a timely manner. Failure of Contractor to provide notification shall be construed as acceptance of conditions indicated, and changes caused by minor differences between products and Contract Documents shall be included in the Work at no additional cost to Owner.
2. Allowable Adjustments: Minor dimension and profile adjustments may be made in interest of fabrication or erection methods or techniques or ability to satisfy design intent, provided design intent is maintained as determined by Architect. Proposed deviations shall include a detailed analysis of impact to adjacent substrates or other building systems, including related design or construction cost impacts. If accepted by Architect, deviations causing changes in materials, constructability, substrates, or conditions shall be included in the Work at no additional cost to Owner.

1.4 ACTION SUBMITTALS

A. Product Data: Manufacturer's technical literature for each product and system indicated.

1. Include manufacturer's specifications for materials, installation instructions, and recommendations for maintenance.

B. Shop Drawings: Show details of fabrication and installation, including plans, elevations, sections, details of components and attachments to other work. Distinguish between shop and field-assembled work. Show details of each type of glazing in conjunction with the appropriate framing system; indicate type of glass, sizes, shapes, glazing material, and quantity. Include details indicating glazing thickness, bite on glass, glass edge clearance, and depth of rabbet.

C. Samples for Verification Purposes: For each type of glass product and glazing material, in the form of 12 in (300 mm) square sample for glass (except clear) and of 12 in (300 mm) long samples for glazing materials.

D. Glazing Schedule: List glass types and thicknesses for each size opening and location. Use same designations indicated on Drawings.

1.5 INFORMATIONAL SUBMITTALS

A. Delegated Engineering Calculations: Informational submittal for products indicated to comply with design loads, include structural analysis data signed and sealed by the qualified professional engineer responsible for their preparation; test reports are not acceptable substitute for calculations.

B. Manufacturer'¢s Project Acceptance Documents: Certifications by the manufacturer that its products and systems are approved, acceptable, suitable for use in specific locations, for specific details, and for applications indicated, specified, or required, and that a warranty will be issued.

1. Certification attesting application and use of glass for effects of thermal loading under expected service temperature ranges has been reviewed, and specified maximum probabilities of breakage will not be exceeded.
2. Certifications attesting performance for specified design wind load criteria, has been reviewed; furnish design factor, statistical probability of breakage and center deflection for the largest size of each thickness and type.
3. Certifications attesting face pressure of heat-strengthened glass units falls within limits specified. Glass determined to be outside these limits shall be replaced at no cost to Owner.
4. Insulated Glass Units: Certification from manufacturer of insulating glass edge sealant indicating that glass edge sealants were tested for compatibility with other glazing materials including sealants, glazing tape, gaskets, setting blocks, and edge blocks.

C. Product Test Reports: Written reports based on evaluation of comprehensive tests performed by qualified testing agency indicating that each product complies with requirements.

1. For glazing sealants, provide test reports based on testing current sealant formulations within previous 36-month period.

D. Preconstruction Test Reports: For insulating or laminated glass and elastomeric glazing sealants. Provide preconstruction adhesion and compatibility test report.

E. Source Quality Control Reports for Quality Standards - Alternate: If requested, written reports documenting testing procedures and recorded measurements.

1. Distortion Tolerance Measurements: For heat-treated glass 6mm or thicker.
2. Insulating Glass Unit Fabrication and Testing Requirements: For insulating glass units.

3. Glass Color Measurements: For monolithic coated glass and insulating coated glass units.

F. Field Quality Control Reports: Written report of testing and inspection required by "Field Quality Control".

G. Qualification Data:

1. For firms and persons specified in "Quality Assurance" to demonstrate their capabilities and experience. Include list of completed projects.

H. Warranty: Sample of Warranty.

1. Provide manufacturer's written warranty covering materials and installation (labor) stating obligations, remedies, limitations and exclusions.

1.6 CLOSEOUT SUBMITTALS

A. Maintenance Data: To include in maintenance manuals.

1.7 QUALITY ASSURANCE

A. Installer Qualifications:

1. Experience: Installer's personnel with not less than 5 years of experience in the successful performance of Work similar to scope of this Project.
2. Supervision: Installer shall maintain a competent supervisor at Project while the Work is in progress, and who has not less than 5 years of experience installing products and systems similar to scope of this Project.
3. Manufacturer Acceptance: Installer shall be certified, approved, licensed, or acceptable to manufacturer to install products.
4. Certification: Installer shall be certified under the National Glass Association's Certified Glass Installer Program.

B. Glazing Publications: Comply with published recommendations of glass product manufacturers and organizations below, unless more stringent requirements are indicated. Refer to these publications for glazing terms not otherwise defined in this Section or in referenced standards.
1. IGMA Publication for Insulating Glass: SIGMA TM-3000, "North American Glazing Guidelines for Sealed Insulating Glass Units for Commercial and Residential Use."

C. Safety Glazing Labeling: Where safety glazing labeling is indicated, permanently mark glazing with certification label of the SGCC or another certification agency acceptable to authorities having jurisdiction. Label shall indicate manufacturer's name, type of glass, thickness, and safety glazing standard with which glass complies.

1. Acceptable Products: Complying with CSPC 16 CFR 1201, Category II.
2. Products Not Permitted: Wired Glass.

D. Fire-Protection-Rated Glazing Labeling: Permanently mark fire-protection-rated glazing with certification label of a testing agency acceptable to authorities having jurisdiction. Label shall indicate manufacturer's name, test standard, whether glazing is for use in fire doors or other openings, whether or not glazing passes hose-stream test, whether or not glazing has a temperature rise rating of 450 deg F (250 deg C), and the fire-resistance rating in minutes.

E. Insulating-Glass Certification Program: Permanently marked either on spacers or on at least one component lite of units with appropriate certification label of IGCC.

1.8 PRECONSTRUCTION TESTING

A. Preconstruction Adhesion and Compatibility Testing: Test each glazing material type, tape sealant, gasket, glazing accessory, and glass-framing member for adhesion to and compatibility with elastomeric glazing sealants.

1. Testing will not be required if data are submitted based on previous testing of current sealant products and glazing materials matching those submitted.
2. Use ASTM C 1087 to determine whether priming and other specific joint-preparation techniques are required to obtain rapid, optimum adhesion of glazing sealants to glass, tape sealants, gaskets, and glazing channel substrates.
3. Test no fewer than eight Samples of each type of material, including joint substrates, shims, sealant backings, secondary seals, and miscellaneous materials.
4. Schedule sufficient time for testing and analyzing results to prevent delaying the Work.
5. For materials failing tests, submit sealant manufacturer's written instructions for corrective measures including the use of specially formulated primers.

B. Testing and Field Constructed Mock Ups: Provide glass and glazing materials for mock ups.

C. Coated Spandrel Glass: Following coating quality criteria shall apply when viewed from indicated distance.

1. At distance of 16 ft (4.8 m) or more under natural light conditions, color and reflectance may vary slightly when viewed against a dark, uniform background. Reflectance variations of plus or minus 1.5 percent are permissible.
2. At distance of 16 ft (4.8 m) or more under natural light conditions, pinholes and scratches, where viewed in reflectance, are considered acceptable if not obvious.

1.9 PRE-INSTALLATION CONFERENCE

A. Pre-Installation Conference: Before Work begins, conduct conference at Project site.

1. Participants:

a. Architect.
b. Contractor, including superintendent.
c. Installer, including project manager and supervisor.
d. If requested, Manufacturer's qualified technical representative.
e. Installers of other construction interfaced with Work.

2. Minimum Agenda: Installer shall demonstrate understanding of the Work required by describing detailed procedures for preparing, installing, and cleaning the Work. Demonstration shall include, but not be limited to, following topics:

a. Tour representative areas of Work, inspect and discuss condition of substrate, and other preparatory work performed by other trades.
b. Review Contract Document requirements.
c. Review approved submittals.
d. Review inspection and testing requirements.

e. Review environmental conditions and procedures for coping with unfavorable conditions.
f. Resolve deviations or differences between Contract Documents and the manufacturer's specifications.

3. Record discussions, including decisions and agreements, and prepare report.

1.10 DELIVERY, STORAGE, AND HANDLING

A. Protect glazing materials according to manufacturer's written instructions. Prevent damage to glass and glazing materials from condensation, temperature changes, direct exposure to sun, or other causes.

B. Insulating Glass Units: Comply with insulating-glass manufacturer's written recommendations for venting and sealing units to avoid hermetic seal ruptures due to altitude change.

1.11 PROJECT CONDITIONS

A. Environmental Limitations: Do not proceed with glazing when ambient and substrate temperature conditions are outside limits permitted by glazing material manufacturers and when glazing channel substrates are wet from rain, frost, condensation, or other causes.

1. Do not install glazing sealants when ambient and substrate temperature conditions are outside limits permitted by sealant manufacturer or below 40 deg F (4.4 deg C).

1.12 COORDINATION

A. Coordinate installation of products and systems with interfacing and adjoining construction to provide a successful installation without failure.

1.13 WARRANTY

A. Manufacturer's Warranty: Furnish manufacturer's written material and labor warranty signed by an authorized representative using manufacturer's standard form agreeing to furnish materials and labor required to repair or replace work which exhibits material defects caused by manufacture or design of product. "Defects" are defined to include but not limited to deterioration or failure to perform as required.

1. Coated Glass: Manufacturer's standard but not less than 10 years after date of Substantial Completion.
2. Insulating Glass Units:

a. Deterioration of Insulating Glass Units: Failure of the hermetic seal under normal use that is attributed to the manufacturing process and not to causes other than glass breakage and practices for maintaining and cleaning insulating glass contrary to manufacturer's written instructions. Evidence of failure is the obstruction of vision by dust, moisture, or film on interior surfaces of glass.
b. Manufacturer's standard but not less than 10 years after date of Substantial Completion.

B. Installer's Warranty: Furnish installer's written workmanship warranty signed by an authorized representative using installer's standard form agreeing to provide labor required to repair or replace work which exhibits workmanship defects. "Defects" is defined to include but not limited to deterioration or failure to perform as required.

1. Warranty Period: Installer shall warrant the installation to be free from workmanship Defects for a period of 2 years from date of Substantial Completion.

PART 2 - PRODUCTS

2.1 MANUFACTURERS

A. Acceptable Manufacturers: Subject to compliance with requirements of Contract Documents as judged by the Architect, provide product by one of manufacturers listed. If not listed, submit as substitution according to the Conditions of the Contract and Division 01 Section "Substitution Procedures".

B. Glass Type Schedules:

1. Exterior: As scheduled, or as indicated in Drawings
2. Interior: As indicated on the drawings. Provide glazing panes 1/4 in (6 mm) thick unless noted otherwise.

2.2 MATERIALS, GENERAL

A. Single Source Responsibility: Furnish each type of product from single manufacturer. Provide secondary materials only as recommended by manufacturer of primary materials.

2.3 PERFORMANCE REQUIREMENTS

A. General: Installed glazing systems shall withstand normal thermal movement and wind and impact loads (where applicable) without failure, including loss or glass breakage attributable to the following: defective manufacture, fabrication, or installation; failure of sealants or gaskets to remain watertight and airtight; deterioration of glazing materials; or other defects in construction.

B. Design Loads: Glazing shall withstand design loads according to ASTM E 1300 including, but not limited to, gravity, wind, seismic, and erection design loads and thermal movements established by authorities having jurisdiction, applicable local building codes, and as indicated.

1. Structural Movement: Glazing shall withstand movements of structure including, but not limited to, drift, twist, column shortening, long-term creep and deflection from uniformly distributed and concentrated live loads. Contractor shall obtain required design data and identify movements accommodated on submittal drawings.

a. System shall accommodate plus or minus 3/8 in (10 mm) differential vertical deflection of floors.

C. Exterior Glazing:

1. Design Wind Pressures: As indicated on Drawings.

2. Vertical Glazing: For glass surfaces sloped 15 degrees or less from vertical, design glass to resist design wind pressure based on glass type factors for short-duration load.
3. Probability of Breakage for Vertical Glazing: 8 lites per 1000 for lites set vertically 15 degrees or less from vertical and under wind action for minimum of 60 seconds duration.

4. Probability of Breakage for Sloped Glazing: For glass surfaces sloped more than 15 degrees from vertical, design glass for a probability of breakage not greater than 0.001.
5. Maximum Lateral Deflection: For glass supported on all four edges, limit center-of-glass deflection at design wind pressure to not more than 1/100 times the short-side length or 1 in (25mm), whichever is less.
6. Differential Shading: Design glass to resist thermal stresses induced by differential shading within individual glass lites.
7. Human Impact Loads: Locations indicated, and as defined by building code; glazed with safety glass.
8. Thermal Movements: Allow for thermal movements from ambient and surface temperature changes acting on glass framing members and glazing components.

    a. Temperature Change: 120 deg F (67 deg C), ambient; 180 deg F (100 deg C), material surfaces.

D. Interior Glazing:

1. Maximum Lateral Deflection: For glass supported on all four edges or two edges, limit center-of-glass deflection to not more than 1/100 times the short-side length or 1/2 in (12 mm), whichever is less, at 10 lb/sq ft lateral load.
2. Differential Deflection: Where interior glazing is installed adjacent to a walking surface, the differential deflection of two adjacent unsupported edges shall not be greater than the thickness of the panels when a force of 50 lb/lin ft (730 N/m) is applied horizontally to one panel at any point up to 42 in (1050 mm) above the walking surface.
3. Differential Shading: Design glass to resist thermal stresses induced by differential shading within individual glass lites.
4. Human Impact Loads: Locations indicated, and as defined by building code; glazed with safety glass.

2.4 GLASS PRODUCTS, GENERAL

A. Thickness: Where glass thickness is indicated, it is a minimum. Provide glass lites in thicknesses as needed to comply with requirements indicated.

1. Minimum Glass Thickness for Exterior Lites: Not less than 6.0 mm.
2. Thickness of Tinted Glass: Provide same thickness for each tint color indicated throughout Project.

B. Strength: Provide Kind HS heat-treated float glass or Kind FT heat-treated float glass, unless otherwise indicated.

C. Safety Glazing: Where safety glazing is indicated, provide glazing that complies with 16 CFR 1201, Category II.

D. Thermal and Optical Performance Properties: Provide glass with performance properties specified, as indicated in manufacturer's published test data, based on procedures indicated below:

1. For monolithic-glass lites, properties are based on units with lites 1/4 in (6 mm) thick.
2. For insulating-glass units, properties are based on units of thickness indicated for overall unit and for each lite.
3. U-Factors: Center-of-glazing values, according to NFRC 100, expressed as Btu/sq. ft. x h x deg F (W/sq. m x K).
4. Solar Heat-Gain Coefficient and Visible Light Transmittance: Center-of-glazing values, according to NFRC 200.
5. Visible Reflectance: Center-of-glazing values, according to NFRC 300.

2.5 GLASS PRODUCTS

A. Primary Float Glass Manufacturers:

1. AGC Glass Co. North America, Inc.
2. Guardian Industries Corporation
3. Pilkington North America, Inc.
4. PPG Industries, Inc.
5. Citadel Architectural products

B. Float Glass: ASTM C 1036, Type I, Quality-Q3, Class I (clear) unless otherwise indicated.

C.) unless otherwise indicated; of kind and condition indicated.

1. Kind HS (heat strengthened) at exterior conditions and where recommended by manufacturer to comply with performance requirements.
2. Kind FT (fully tempered) where indicated, where recommended by manufacturer to comply with performance requirements or required for safety glazing.
3. Class 1 (clear) unless otherwise indicated.
4. Class 2 (tinted), where indicated.
5. Fabrication Process: By horizontal (roller-hearth) process with roll-wave distortion parallel to bottom edge of glass as installed unless otherwise indicated.
6. For uncoated glass, comply with requirements for Condition A.
7. For coated vision glass, comply with requirements for Condition C (other coated glass).

D. Ceramic-Coated Spandrel Glass: ASTM C 1048, Condition B, Type I, Quality-Q3, and with other requirements as specified.

2.6 LAMINATED GLASS

A. Laminated Glass: ASTM C 1172, and complying with testing requirements in 16 CFR 1201 for Category II materials, and with other requirements specified. Use materials that have a proven record of no tendency to bubble, discolor, or lose physical and mechanical properties after fabrication and installation.

1. Construction: Laminate glass with polyvinyl butyral (PVB) interlayer or cast-in-place and cured-transparent-resin interlayer to comply with interlayer manufacturer's written recommendations.
2. Interlayer Thickness: Minimum 0.030 in (0.75 mm) unless otherwise indicated.

    a. Heat Strengthened and Fully Tempered Glazing: 0.060 in (1.5 mm) minimum.

3. Interlayer Color: Clear unless otherwise indicated.

4. Typical Interlayer - Manufacturers and Products:

    a. DuPont; Butacite.
    b. Solutia Inc.; Saflex.
    c. Viracon

2.7 INSULATING GLASS

A. Insulating-Glass Units: Factory-assembled units consisting of sealed lites of glass separated by a dehydrated interspace, qualified according to ASTM E 2190, and complying with other requirements specified.

1. Sealing System: Dual seal, with polyisobutylene primary seal and silicone secondary seal in accordance with ASTM C 1249. Voids or skips in the primary seal are not allowed.

2. Spacer: Provide a hermetically sealed and dehydrated space; lites shall be separated by a spacer with three bent corners and one keyed-soldered corner or four bent corners and one straight butyl injected zinc plated steel straight key joint.

    a. Spacer Material and Color:

        1) Division 8 Section Glazed Aluminum Framing Systems: Aluminum with mill or clear anodic finish, unless otherwise indicated.

3. Desiccant: Molecular sieve or silica gel, or blend of both.

2.8 FIRE-PROTECTION-RATED GLAZING

A. Fire-Protection-Rated Glazing, General: Listed and labeled by a testing agency acceptable to authorities having jurisdiction, for fire-protection ratings indicated, based on testing according to NFPA 252 for door assemblies and NFPA 257 for window assemblies.

B. Monolithic Ceramic Glazing: Clear, ceramic flat glass; 3/16 in (5 mm) nominal thickness.

1. Manufacturers and Products:

    a. Nippon Electric Glass Co., Ltd. (distributed by Technical Glass Products); FireLite
    b. Safti First, a Division of O'Keefe's Inc.; SuperLite C/SP (for ratings up to 45-minute only)
    c. Schott North America, Inc.; Pyran Star
    d. Vetrotech Saint-Gobain; SGG Keralite FR-R

2. Locations: Where indicated on drawings for 20, 45, 60, and 90 minute ratings where safety glazing is not required.

C. Laminated Ceramic Glazing: Laminated glass made from 2 plies of clear, ceramic flat glass; 5/16-inch (8-mm) total nominal thickness; complying with testing requirements in 16 CFR 1201 for Category II materials.

1. Manufacturers and Products:

a. Nippon Electric Glass Co., Ltd. (distributed by Technical Glass Products); FireLite Plus
b. Oldcastle Glass, Inc.; Pyroguard
c. Schott North America, Inc.; Pyran Star L
d. Vetrotech Saint-Gobain; SGG Keralite FR-L

2. Locations: Where indicated on drawings for 20, 45, 60, 90, and 120 minute ratings where safety glazing is required.

D. Dense Compression Gaskets: Molded or extruded gaskets of profile and hardness required to maintain watertight seal, made from one of the following:

1. EPDM complying with ASTM C 864.
2. Silicone complying with ASTM C 1115.
3. Thermoplastic polyolefin rubber complying with ASTM C 1115.

E. Soft Compression Gaskets: Extruded or molded closed-cell, integral-skinned gaskets of EPDM, silicone, or thermoplastic polyolefin rubber, complying with ASTM C 509, Type II, black, and of profile and hardness required to maintain watertight seal and compatible with sealants.

1. Application: Use where soft compression gaskets will be compressed by inserting dense compression gaskets on opposite side of glazing or pressure applied by means of pressure-glazing stops on opposite side of glazing.

F. Provide factory pre-molded, vulcanized or heat welded corners, for continuous, joint-free glazing material around sides of the glazing rabbet. Field-cut corners not allowed.

G. Provide gasket slightly longer than opening to be filled, as recommended by gasket manufacturer.

2.9 GLAZING TAPES

A. Back-Bedding Mastic Glazing Tapes: Preformed, butyl-based, 100 percent solids elastomeric tape; nonstaining and nonmigrating in contact with nonporous surfaces; with or without spacer rod as recommended in writing by tape and glass manufacturers for application indicated; and complying with ASTM C 1281 and AAMA 800 for products indicated below:

1. AAMA 806.3 tape is for high-performance commercial glazing applications involving continuous pressure from gaskets or pressure-generating stop designs. AAMA 806.3 tape, for glazing applications in which tape is subject to continuous pressure.

2.10 ENGINEERED TRANSITION ASSEMBLIES

A. Engineered Transition Assembly: Provide engineered transition assembly to seal air barrier perimeter to windows, doors and glazed aluminum framing systems.

1. Basis of Design: Tremco, Inc; Proglaze Engineered Transition Assembly (ETA).

B. Pre-Engineered Aluminum and Silicone Materials: Mechanically attach system assembly to glazed aluminum framing systems and provide durable seal. Engineered transitions assembly includes the following components:

1. Silicone Rubber Sheet (SRS): Extruded, 40 durometer, translucent silicone, with lock-in rubber dart.
2. Silicone Rubber Corners (SRC): Pre-molded, 40 durometer, translucent silicone, with lock in rubber dart
3. Silicone Sealants: Comply with ASTM C 920, single-component, neutral-curing silicone; Class 100/50, Grade NS, Use O.

    a. Basis of Design: Tremco Inc.; Spectrem 1, or other approved sealant as recommended by manufacturer.

4. Extruded Aluminum Attachment (EAA): Alodine finished, pre-engineered profile designed to receive silicone lock-in rubber dart. Pre-drilled extrusion with butyl tape, 100% solid **polyisobutylene-cross linked butyl preformed sealant.**

2.11 MISCELLANEOUS GLAZING MATERIALS

A. General: Provide products of material, size, and shape complying with referenced glazing standard, requirements of manufacturers of glass and other glazing materials for application indicated, and with a proven record of compatibility with surfaces contacted in installation.

B. Cleaners, Primers, and Sealers: Types recommended by sealant or gasket manufacturer.

C. Setting Blocks: Elastomeric material with a Shore, Type A durometer hardness of 85, plus or minus 5.

D. Spacers: Elastomeric blocks or continuous extrusions of hardness required by glass manufacturer to maintain glass lites in place for installation indicated.

E. Edge Blocks: Elastomeric material of hardness needed to limit glass lateral movement (side walking).

F. Cylindrical Glazing Sealant Backing: ASTM C 1330, Type O (open-cell material), of size and density to control glazing sealant depth and otherwise produce optimum glazing sealant performance.

G. Perimeter Insulation for Fire-Resistive Glazing: Product that is approved by testing agency that listed and labeled fire-resistant glazing product with which it is used for application and fire-protection rating indicated.

2.12 FABRICATION OF GLAZING UNITS

A. Fabricate glazing units in sizes required to fit openings indicated for Project, with edge and face clearances, edge and surface conditions, and bite complying with written instructions of product manufacturer and referenced glazing publications, to comply with system performance requirements.

B. Grind smooth and polish exposed glass edges and corners.

2.13 SOURCE QUALITY CONTROL - ALTERNATE

A. Inspections and Testing: Manufacturer/fabricator shall perform pre-construction source quality-control inspections and testing, including but not limited to the following.

1. Basis of Design for Quality Standard: PPG Skyline Quality Standard or equivalent standard as recommended by glass manufacturer/fabricator and accepted by the Architect.
2. Certification: Certifications by the manufacturer/fabricator that its products and systems comply with requirements and that products failing to meet requirements are not incorporated into the Work.
3. Documentation: Inspection and testing records shall be maintained for a period of 10 years from the date of Substantial Completion. Provide inspection and testing records upon request and at no cost to Owner or Architect.

B. Distortion Tolerance Measurement for Processing Heat-Treated Glass.

1. On-Line Distortion Measurement System: Measure each piece of monolithic, uncoated or coated, heat-treated glass 6 mm or thicker.

    a. Visual Mock Up Glass: Measurements for glass panels used in mock ups shall establish fabrication tolerances for the Project. Glass panels used in visual mock ups shall be fabricated to and representative of the same fabrication tolerances as glass panels used on the Project.

2. Roll Wave and Milidiopter Maximum Distortion Tolerances: On-Line Measurement.

    a. Roll Wave (Horizontal) Distortion Tolerances: Maximum 0.003 inch at center of panel; 0.008 inch at edges of panel. Measurements are from peak to valley.
    b. Millidiopter Measurements: 90% of surface area shall be within a maximum range of plus or minus 120 millidiopters overall.
    c. Measurement Device: On-Line measurement system utilizing high resolution optics measured in diopters.
    d. Exclusions: Silk screen, full coverage ceramic frit glass and glass panels 10 mm and thicker are excluded from this requirement.

3. Bow/Warp Distortion Tolerance (Concave/Convex): Off-Line Straight Edge Measurement.

    a. Bow/Warp Distortion Tolerance: Limited to a maximum of 1/2 of tolerances indicated in ASTM C1048 or 1/32 in (0.8 mm) per lineal foot.

C. Insulating Glass Unit Fabrication and Testing Requirements.

1. Primary Seal - Sealant Adhesion Testing: Manufacturer's recommended IGU adhesion pull testing process on units fabricated at the same time of production and on the same production line using the same processing equipment for the production of this Project. Conduct testing each shift or carton change on units not less than 24 in (600 mm) x 24 in (600 mm).

    a. Adhesion Criteria: Comply with pass/fail requirements of manufacturer's published guidelines and/or manufacturer's certification requirements.

2. Desiccant Temperature Rise Testing:

    a. Criteria: Comply with desiccant manufacturer's written recommendations.

3. Bow/Warp Unit Distortion Tolerance (Concave/Convex): Off-Line Straight Edge Measurement.

    a. Bow/Warp Unit Distortion Tolerance: Limited to a maximum of 1/2 of tolerances indicated in ASTM C1048 or 1/32 in (0.8 mm) per lineal foot.
    b. Air Space Gap Measurement: Visually inspect all units and measure center air space gap on all finished units over 35 square feet.

        1) Air Space Gap Tolerance: Maximum plus or minus 1/16 in (1.5 mm) at time of fabrication.

4. Coating Edge Deletion: Clean, straight and precise.

    ~~a.~~ Coating Edge Deletion Tolerance: Uniformly remove coating to the greater of 3/8 in (10 mm) from the glass edge or between centerline of the spacer and top of primary seal.

PART 3 - EXECUTION

3.1 EXAMINATION

A. Acceptance of Surfaces and Conditions: Examine substrates to receive products and systems and associated work for compliance with requirements and other conditions affecting performance. Proceed only when unsatisfactory conditions have been corrected in a manner complying with Contract Documents. Starting work within a particular area will be construed as acceptance of surface conditions.

B. Examine framing, glazing channels, and stops, with Installer present, for compliance with the following:

1. Manufacturing and installation tolerances, including those for size, squareness, and offsets at corners.
2. Presence and functioning of weep systems.
3. Minimum required face and edge clearances.
4. Effective sealing between joints of glass-framing members.

C. Proceed with installation only after unsatisfactory conditions have been corrected.

3.2 INSTALLATION, GENERAL

A. Installation Quality Standards: In addition to standards listed elsewhere, perform Work according to following, unless otherwise specified:

1. Respective manufacturer's written installation instructions.
2. Accepted submittals.
3. Contract Documents.

3.3 PREPARATION

A. General: Comply with manufacturer's instructions, recommendations, and specifications for cleaning and surface preparation. Surfaces shall have no defects, contaminants, or errors which would result in poor or potentially defective installation or would cause latent defects in Work.

B. Clean glazing channels and other framing members receiving glass immediately before glazing. Remove coatings not firmly bonded to substrates.

C. Examine glazing units to locate exterior and interior surfaces. Label or mark units as needed so that exterior and interior surfaces are readily identifiable. Do not use materials that will leave visible marks in the completed work.

3.4 GLAZING, GENERAL

A. Comply with combined written instructions of manufacturers of glass, sealants, gaskets, and other glazing materials, unless more stringent requirements are indicated, including those in referenced glazing publications.

B. Adjust glazing channel dimensions as required by Project conditions during installation to provide necessary bite on glass, minimum edge and face clearances, and adequate sealant thicknesses, with reasonable tolerances.

C. Protect glass edges from damage during handling and installation. Remove damaged glass from Project site and legally dispose of off Project site. Damaged glass is glass with edge damage or other imperfections that, when installed, could weaken glass and impair performance and appearance.

D. Apply primers to joint surfaces where required for adhesion of sealants, as determined by preconstruction testing.

E. Install setting blocks in sill rabbets, sized and located to comply with referenced glazing publications, unless otherwise required by glass manufacturer. Set blocks in thin course of compatible sealant suitable for heel bead.

F. Do not exceed edge pressures stipulated by glass manufacturers for installing glass lites.

G. Provide spacers for glass lites where length plus width is larger than 50 in (1270 mm).

1. Locate spacers directly opposite each other on both inside and outside faces of glass. Install correct size and spacing to preserve required face clearances, unless gaskets and glazing tapes are used that have demonstrated ability to maintain required face clearances and to comply with system performance requirements.
2. Provide 1/8 in (3 mm) minimum bite of spacers on glass and use thickness equal to sealant width. With glazing tape, use thickness slightly less than final compressed thickness of tape.

H. Provide edge blocking where indicated or needed to prevent glass lites from moving sideways in glazing channel, as recommended in writing by glass manufacturer and according to requirements in referenced glazing publications.

I. Set glass lites in each series with uniform pattern, draw, bow, and similar characteristics.

J. Set glass lites with proper orientation so that coatings face exterior or interior as specified.

K. Where wedge-shaped gaskets are driven into one side of channel to pressurize sealant or gasket on opposite side, provide adequate anchorage so gasket cannot walk out when installation is subjected to movement.

L. One-Way Observation Mirrored Glazing: Install with reflective surface facing the brightly lit subject-side.

3.5 TAPE GLAZING

A. Position tapes on fixed stops so that, when compressed by glass, their exposed edges are flush with or protrude slightly above sightline of stops.

B. Install tapes continuously, but not necessarily in one continuous length. Do not stretch tapes to make them fit opening.

C. Cover vertical framing joints by applying tapes to heads and sills first and then to jambs. Cover horizontal framing joints by applying tapes to jambs and then to heads and sills.

D. Place joints in tapes at corners of opening with adjoining lengths butted together, not lapped. Seal joints in tapes with compatible sealant approved by tape manufacturer.

E. Do not remove release paper from tape until right before each glazing unit is installed.

F. Center glass lites in openings on setting blocks and press firmly against tape by inserting dense compression gaskets formed and installed to lock in place against faces of removable stops. Start gasket applications at corners and work toward centers of openings.

3.6 GASKET GLAZING (DRY)

A. Fabricate compression gaskets to lengths recommended by gasket manufacturer to fit openings exactly, with allowance for stretch during installation.

B. Insert soft compression gasket between glass and frame or fixed stop so it is securely in place with joints miter cut and bonded together at corners.

C. Installation with Drive-in Wedge Gaskets: Center glass lites in openings on setting blocks and press firmly against soft compression gasket by inserting dense compression gaskets formed and installed to lock in place against faces of removable stops. Start gasket applications at corners and work toward centers of openings. Compress gaskets to produce a weathertight seal without developing bending stresses in glass. Seal gasket joints with sealant recommended by gasket manufacturer.

D. Installation with Pressure-Glazing Stops: Center glass lites in openings on setting blocks and press firmly against soft compression gasket. Install dense compression gaskets and pressure-glazing stops, applying pressure uniformly to compression gaskets. Compress gaskets to produce a weathertight seal without developing bending stresses in glass. Seal gasket joints with sealant recommended by gasket manufacturer.

E. Install gaskets so they protrude past face of glazing stops.

3.7 FIELD QUALITY CONTROL

A. Testing Agency: Owner may employ and pay for qualified independent testing agency to perform field quality control test in accordance with Division 01 Section "Field Test for Water Leakage". Materials and installation failing to meet specified requirements shall be replaced at Contractor's expense. Retesting of materials and installations failing to meet specified requirements shall be done at Contractor’¢s expense.

3.8 CLEANING AND PROTECTION

A. Protect exterior glass from damage immediately after installation by attaching crossed streamers to framing held away from glass. Do not apply markers to glass surface. Remove nonpermanent labels and clean surfaces.

B. Protect glass from contact with contaminating substances resulting from construction operations. If, despite such protection, contaminating substances do come into contact with glass, remove substances immediately as recommended in writing by glass manufacturer.

C. Examine glass surfaces adjacent to or below exterior concrete and other masonry surfaces at frequent intervals during construction, but not less than once a month, for buildup of dirt, scum, alkaline deposits, or stains; remove as recommended in writing by glass manufacturer.

D. Remove and replace glass that is broken, chipped, cracked, or abraded or that is damaged from natural causes, accidents, and vandalism, during construction period.

E. Wash glass on both exposed surfaces in each area of Project not more than four days before date scheduled for inspections that establish date of Substantial Completion. Wash glass as recommended in writing by glass manufacturer.

3.9 GLASS TYPE SCHEDULE: Refer to Exterior Elevation Drawings.

END OF SECTION

SECTION 08 8816

BETWEEN GLASS BLINDS UNITS

PART 1 - GENERAL

1.1 SUMMARY

A. Work required for this section includes aluminum-framed between glass blind unit glazed into metal framing system (hollow metal or aluminum as indicated on drawings) and supplementary items necessary to complete its installation.

1.2 ACTION SUBMITTALS

A. Product Data: Manufacturer's technical literature for each product and system indicated.

1. Include manufacturer's specifications for materials, finishes, construction details, installation instructions, and recommendations for maintenance.

B. Shop Drawings: Show details of fabrication and installation, including plans, elevations, sections, details of components and attachments to other work. Distinguish between shop and field-assembled work.

C. Samples for Initial Selection: For each type and color of louver slat indicated.

1. Include similar samples of accessories involving color selection.

D. Samples for Verification: For the following products, prepared on Samples from the same material to be used for the Work.

1. Louver Slat: Not less than 12 in (300 mm) long.

1.3 INFORMATIONAL SUBMITTALS

A. Qualification Data:

1. For firms and persons specified in "Quality Assurance" to demonstrate their capabilities and experience. Include list of completed projects.

B. Window Treatment Schedule: Include between glass blinds in schedule using same room designations indicated on Drawings.

1.4 CLOSEOUT SUBMITTALS

A. Maintenance Data: For between glass blinds to include in maintenance manuals. Include the following:

1. Methods for maintaining between glass blinds and finishes.
2. Operating hardware.

1.5 QUALITY ASSURANCE

A. Manufacturer Qualifications: Manufacturer with not less than 5 years of experience in the successful production and in-service performance of products and systems similar to scope of this Project.

B. Mock-ups: Prior to fabrication and installation, build mock-up for each form of construction and finish required to verify selections made under sample Submittals and to demonstrate aesthetic effects and qualities of materials and execution. Build mock-up using materials indicated for the completed Work.

1. Build mock-up in the location and of the size indicated or, if not indicated, as directed by Architect. Contractor shall provide structural support framework.

    a. Show typical components, attachments to building structure, and requirements of installation.

2. Notify Architect seven days in advance of the dates and times when mock-up will be installed.
3. Obtain Architect's acceptance of mock-ups before starting fabrication or installation.
4. Acceptance of mock-ups does not constitute acceptance of deviations from the Contract Documents contained in mock-ups unless such deviations are specifically noted by Contractor and accepted by Architect in writing.
5. Demolish and remove mock-ups when directed by Architect unless accepted to become part of the completed Work.

1.6 PROJECT CONDITIONS

A. Environmental Limitations: Do not install blinds until construction and wet and dirty finish work in spaces, including painting, is complete and ambient temperature and humidity conditions are maintained at the levels indicated for Project when occupied for its intended use.

B. Field Measurements: Where products and systems are indicated to fit walls and other construction, verify dimensions by field measurements before fabrication.

1.7 COORDINATION

A. Coordinate installation of products and systems with interfacing and adjoining construction to provide a successful installation without failure.

1.8 WARRANTY

A. Manufacturer’s Warranty: Furnish manufacturer’s written material and labor warranty signed by an authorized representative using manufacturer’s standard form agreeing to furnish materials and labor required to repair or replace work which exhibits material defects caused by manufacture or design and installation of product. “Defects” is defined to include but not limited to deterioration or failure to perform as required.

1. Warranty Period: Manufacturer shall warrant the products to be free from material and labor Defects for a period of 5 years from date of Substantial Completion

PART 2 - PRODUCTS

2.1 MANUFACTURERS AND PRODUCTS

A. Available Manufacturers/Fabricators and Products: Subject to compliance with requirements of Contract Documents as judged by the Architect, manufacturers/fabricators offering products that may be incorporated into the Work include, but are not limited to, those listed.

1. Unicel Architectural; Viulite, Model SL20P (Tilt Only, Dual Operator).

2.2 MATERIALS

A. Clear Tempered Glass: ASTM C1048, Type 1 transparent flat, Class 1 clear, Quality q3 glazing select, Kind FT fully tempered.

B. Louvers: Manufacturer's standard aluminum mini-blinds, 1/8 in (3 mm) wide by 0.008 in (0.2 mm) thick with crowned profile. Head and bottom rails same color as slats. Side rails to support head rail and provide spacing between blind and inside surface of glass.

1. Color: As selected from manufacturer's standard colors.

2.3 FABRICATION

A. Integral Louver Blinds Unit: 1 in (25 mm) thick insulated glass unit consisting of two 1/8 in (3 mm) tempered glass lites sandwiched with mini-blinds in air space; blinds to be tilted via external ADA-compliant device both sides of door (unless indicated otherwise) having a force to tilt blinds of less than 2.25 lbf (10 N).

B. Sealed Insulating Glass Units: Comply with ASTM E774.

1. Sealing System: Seal with manufacturer’s standard sealant.
2. Spacer: Manufacturer’s standard spacer material and construction.
3. Desiccant: Molecular sieve or silica gel, or blend of both.

C. Operating Mechanism: Manufacturer's standard operating mechanism for operating blinds (tilt only) from either side of unit; except at psychiatric units, ADA-compliant mounting height.

D. Unit Configuration (Tempered Unit):

1. Outer Lite: 1/8 in (3 mm) thick clear tempered glass.
2. Airspace: 3/4 in (19 mm).
3. Inner Lite: 1/8 in (3 mm) thick clear tempered glass.

E. Tolerances:

1. Space of approximately 1/8 in (3 mm) on each side between slats and spacer, for free movement of system and allowing thermal transmission of aluminum slats.
2. Blind Width Tolerance: Plus zero; minus 1/16 in (1.5 mm).
3. Blind Height Tolerance: Plus 3/8 in (9 mm); minus zero. Bottom rail engages pins in sidetrack with some slack and is slightly above lower spacer bar.

PART 3 - EXECUTION

3.1 EXAMINATION

A. Acceptance of Surfaces and Conditions: Examine substrates to receive products and systems and associated work for compliance with requirements and other conditions affecting performance. Proceed only when unsatisfactory conditions have been corrected in a manner complying with Contract Documents. Starting work within a particular area will be construed as acceptance of surface conditions.

3.2 INSTALLATION, GENERAL

A. Installation Quality Standards: In addition to standards listed elsewhere, perform Work according to following, unless otherwise specified:

1. Respective manufacturer/fabricator's written installation instructions.
2. Accepted submittals.
3. Contract Documents.

B. Preparation: Comply with manufacturer's instructions, recommendations, and specifications for cleaning and surface preparation. Surfaces shall have no defects, contaminants, or errors which would result in poor or potentially defective installation or would cause latent defects in Work.

C. Remove protective film, clean glass, and verify operation of operating mechanism to produce optimum tilt operation for smooth slat rotation of blinds.

D. Remove nonpermanent labels, and clean surfaces.

3.3 ADJUSTING, CLEANING, AND PROTECTION

A. Protect insulating glass blind system units from damage immediately after installation by attaching crossed streamers to framing held away from glazing unit. Do not apply markers to security glazing surfaces.

B. Protect insulating glass blind system units from contact with contaminating substances resulting from construction operations, including weld splatter. If, despite such protection, contaminating substances do come into contact with insulating glass blind system units, remove substances immediately as recommended in writing by insulating glass blind system manufacturer.

C. Remove and replace insulating glass blind system units that are broken, chipped, cracked, or abraded or that are damaged from natural causes, accidents, or vandalism during construction period.

D. Wash insulating glass blind system units on exposed surfaces in each area of Project not more than four days before date scheduled for inspections that establish date of Substantial Completion. Wash insulating glass blind system units as recommended in writing by insulating glass blind system manufacturer.

END OF SECTION

SECTION 08 8816

BETWEEN GLASS BLINDS UNITS

PART 1 - GENERAL

1.1 SUMMARY

A. Work required for this section includes aluminum-framed between glass blind unit glazed into metal framing system (hollow metal or aluminum as indicated on drawings) and supplementary items necessary to complete its installation.

1.2 ACTION SUBMITTALS

A. Product Data: Manufacturer's technical literature for each product and system indicated.

1. Include manufacturer's specifications for materials, finishes, construction details, installation instructions, and recommendations for maintenance.

B. Shop Drawings: Show details of fabrication and installation, including plans, elevations, sections, details of components and attachments to other work. Distinguish between shop and field-assembled work.

C. Samples for Initial Selection: For each type and color of louver slat indicated.

1. Include similar samples of accessories involving color selection.

D. Samples for Verification: For the following products, prepared on Samples from the same material to be used for the Work.

1. Louver Slat: Not less than 12 in (300 mm) long.

1.3 INFORMATIONAL SUBMITTALS

A. Qualification Data:

1. For firms and persons specified in "Quality Assurance" to demonstrate their capabilities and experience. Include list of completed projects.

B. Window Treatment Schedule: Include between glass blinds in schedule using same room designations indicated on Drawings.

1.4 CLOSEOUT SUBMITTALS

A. Maintenance Data: For between glass blinds to include in maintenance manuals. Include the following:

1. Methods for maintaining between glass blinds and finishes.
2. Operating hardware.

1.5 QUALITY ASSURANCE

A. Manufacturer Qualifications: Manufacturer with not less than 5 years of experience in the successful production and in-service performance of products and systems similar to scope of this Project.

B. Mock-ups: Prior to fabrication and installation, build mock-up for each form of construction and finish required to verify selections made under sample Submittals and to demonstrate aesthetic effects and qualities of materials and execution. Build mock-up using materials indicated for the completed Work.

1. Build mock-up in the location and of the size indicated or, if not indicated, as directed by Architect. Contractor shall provide structural support framework.

    a. Show typical components, attachments to building structure, and requirements of installation.

2. Notify Architect seven days in advance of the dates and times when mock-up will be installed.
3. Obtain Architect's acceptance of mock-ups before starting fabrication or installation.
4. Acceptance of mock-ups does not constitute acceptance of deviations from the Contract Documents contained in mock-ups unless such deviations are specifically noted by Contractor and accepted by Architect in writing.
5. Demolish and remove mock-ups when directed by Architect unless accepted to become part of the completed Work.

1.6 PROJECT CONDITIONS

A. Environmental Limitations: Do not install blinds until construction and wet and dirty finish work in spaces, including painting, is complete and ambient temperature and humidity conditions are maintained at the levels indicated for Project when occupied for its intended use.

B. Field Measurements: Where products and systems are indicated to fit walls and other construction, verify dimensions by field measurements before fabrication.

1.7 COORDINATION

A. Coordinate installation of products and systems with interfacing and adjoining construction to provide a successful installation without failure.

1.8 WARRANTY

A. Manufacturer’s Warranty: Furnish manufacturer’s written material and labor warranty signed by an authorized representative using manufacturer’s standard form agreeing to furnish materials and labor required to repair or replace work which exhibits material defects caused by manufacture or design and installation of product. “Defects” is defined to include but not limited to deterioration or failure to perform as required.

1. Warranty Period: Manufacturer shall warrant the products to be free from material and labor Defects for a period of 5 years from date of Substantial Completion

PART 2 - PRODUCTS

2.1 MANUFACTURERS AND PRODUCTS

A. Available Manufacturers/Fabricators and Products: Subject to compliance with requirements of Contract Documents as judged by the Architect, manufacturers/fabricators offering products that may be incorporated into the Work include, but are not limited to, those listed.

1. Unicel Architectural; Viulite, Model SL20P (Tilt Only, Dual Operator).

2.2 MATERIALS

A. Clear Tempered Glass: ASTM C1048, Type 1 transparent flat, Class 1 clear, Quality q3 glazing select, Kind FT fully tempered.

B. Louvers: Manufacturer's standard aluminum mini-blinds, 1/8 in (3 mm) wide by 0.008 in (0.2 mm) thick with crowned profile. Head and bottom rails same color as slats. Side rails to support head rail and provide spacing between blind and inside surface of glass.

1. Color: As selected from manufacturer's standard colors.

2.3 FABRICATION

A. Integral Louver Blinds Unit: 1 in (25 mm) thick insulated glass unit consisting of two 1/8 in (3 mm) tempered glass lites sandwiched with mini-blinds in air space; blinds to be tilted via external ADA-compliant device both sides of door (unless indicated otherwise) having a force to tilt blinds of less than 2.25 lbf (10 N).

B. Sealed Insulating Glass Units: Comply with ASTM E774.

1. Sealing System: Seal with manufacturer’s standard sealant.
2. Spacer: Manufacturer’s standard spacer material and construction.
3. Desiccant: Molecular sieve or silica gel, or blend of both.

C. Operating Mechanism: Manufacturer's standard operating mechanism for operating blinds (tilt only) from either side of unit; except at psychiatric units, ADA-compliant mounting height.

D. Unit Configuration (Tempered Unit):

1. Outer Lite: 1/8 in (3 mm) thick clear tempered glass.
2. Airspace: 3/4 in (19 mm).
3. Inner Lite: 1/8 in (3 mm) thick clear tempered glass.

E. Tolerances:

1. Space of approximately 1/8 in (3 mm) on each side between slats and spacer, for free movement of system and allowing thermal transmission of aluminum slats.
2. Blind Width Tolerance: Plus zero; minus 1/16 in (1.5 mm).
3. Blind Height Tolerance: Plus 3/8 in (9 mm); minus zero. Bottom rail engages pins in sidetrack with some slack and is slightly above lower spacer bar.

PART 3 - EXECUTION

3.1 EXAMINATION

A. Acceptance of Surfaces and Conditions: Examine substrates to receive products and systems and associated work for compliance with requirements and other conditions affecting performance. Proceed only when unsatisfactory conditions have been corrected in a manner complying with Contract Documents. Starting work within a particular area will be construed as acceptance of surface conditions.

3.2 INSTALLATION, GENERAL

A. Installation Quality Standards: In addition to standards listed elsewhere, perform Work according to following, unless otherwise specified:

1. Respective manufacturer/fabricator's written installation instructions.
2. Accepted submittals.
3. Contract Documents.

B. Preparation: Comply with manufacturer's instructions, recommendations, and specifications for cleaning and surface preparation. Surfaces shall have no defects, contaminants, or errors which would result in poor or potentially defective installation or would cause latent defects in Work.

C. Remove protective film, clean glass, and verify operation of operating mechanism to produce optimum tilt operation for smooth slat rotation of blinds.

D. Remove nonpermanent labels, and clean surfaces.

3.3 ADJUSTING, CLEANING, AND PROTECTION

A. Protect insulating glass blind system units from damage immediately after installation by attaching crossed streamers to framing held away from glazing unit. Do not apply markers to security glazing surfaces.

B. Protect insulating glass blind system units from contact with contaminating substances resulting from construction operations, including weld splatter. If, despite such protection, contaminating substances do come into contact with insulating glass blind system units, remove substances immediately as recommended in writing by insulating glass blind system manufacturer.

C. Remove and replace insulating glass blind system units that are broken, chipped, cracked, or abraded or that are damaged from natural causes, accidents, or vandalism during construction period.

D. Wash insulating glass blind system units on exposed surfaces in each area of Project not more than four days before date scheduled for inspections that establish date of Substantial Completion. Wash insulating glass blind system units as recommended in writing by insulating glass blind system manufacturer.

END OF SECTION

SECTION 09 2400

PORTLAND CEMENT PLASTERING

PART 1 - GENERAL

1.1 SUMMARY

A. Section Includes: Portland cement plastering and supplementary items necessary for installation for the following:

1. Exterior Walls: Direct bond Portland cement plastering, with modified cement waterproofing base coat, over cementitious substrates.
2. Exterior / Interior Walls: Portland cement plastering over metal lath.
3. Exterior Soffits and Ceilings: Portland cement plastering over metal lath on suspended framing system.
4. Accent Trim: Plaster system foam trim.

1.2 ACTION SUBMITTALS

A. Product Data: Manufacturer's technical literature for each product and system indicated.

1. Include manufacturers specifications for materials, finishes, construction details, installation instructions, and recommendations for maintenance.

B. Shop Drawings: Show details of fabrication and installation, including plans, elevations, sections, details of components and attachments to other work.

1. Show locations and installation of control and expansion joints; indicated on all project elevations.

C. Samples for Initial Selection: For each type of Plaster Finish System indicated. Include Samples of accessories involving color selection.

D. Samples for Verification Purposes: Submit samples for each item listed below of size and construction indicated. Where products involve normal color and texture variations, include sample sets showing the full range of variations expected.

1. 18 in (450 mm) square layered sample consisting of each Portland Cement Plaster System layer; prepared on rigid backing.
2. 12 in (300 mm) long sample of each metal trim accessory.
3. 12 in (300 mm) long flashing with end dam.
4. 12 in (300 mm) long sample of each foam trim profile.

1.3 INFORMATIONAL SUBMITTALS

A. Product Test Reports: Written reports based on evaluation of comprehensive tests performed by qualified testing agency indicating that each product complies with requirements.

1. Product Approvals: Submit Product Control Notice of Acceptance (NOA) issued by Miami-Dade County Building Code Compliance Office (BCCO) or other product approval acceptable to authorities having jurisdiction for systems used at exterior of building.

B. Field Quality Control Reports: Written report of testing and inspection required by Field Quality Control.

C. Exterior and Interior Plastering Work Plan: Submit written plan detailing methods, materials and equipment to be used to comply with weather requirements.

D. List of Materials for Layered Mock-Up for Construction Quality Purposes:

1. Product, material, and equipment names, model numbers, lot numbers, batch numbers, source of supply, and other information required to identify items used. Include mix proportions for plaster and source of aggregates.
2. Receipt of list does not constitute approval of deviations from Contract Documents, unless such deviations are specifically accepted by Architect in writing.

E. Qualification Data:

1. For firms and persons specified in Quality Assurance to demonstrate their capabilities and experience. Include list of completed projects.

1.4 QUALITY ASSURANCE

A. Manufacturer Qualifications: Manufacturer with not less than 10 years of experience in the successful production and in-service performance of products and systems similar to scope of this Project.

B. Installer Qualifications:

1. Experience: Installer's personnel with not less than 10 years of experience in the successful performance of Work similar to scope of this Project.
2. Supervision: Installer shall maintain a competent supervisor at Project while the Work is in progress, and who has not less than 10 years of experience installing products and systems similar to scope of this Project.

C. Pre-Construction Testing: Owner may employ and pay an independent testing agency to perform pre-construction testing to establish compliance of proposed Work with specified requirements.

1. General Requirements: Test plaster mixes for composition to establish standard for field testing specified under "Field Quality Control" Article.
2. Test Method: ASTM C 780, Annex A4.
3. Specimen Quantity: As recommended by Testing Agency for this project.
4. Reports: Interpret test results and prepare certified reports.

D. Mock-ups: Prior to fabrication and installation, build mock-up for each form of construction and finish required to verify selections made under sample Submittals and to demonstrate aesthetic effects and qualities of materials and execution. Build mock-up using materials indicated for the completed Work.

1. Build mock-up in the location and of the size indicated or, if not indicated, as directed by Architect. Contractor shall provide structural support framework.

    a. Show typical components, attachments to building structure, and requirements of installation.

2. Notify Architect seven days in advance of the dates and times when mock-up will be installed.
3. Obtain Architect's acceptance of mock-ups before starting fabrication or installation.
4. Acceptance of mock-ups does not constitute acceptance of deviations from the Contract Documents contained in mock-ups unless such deviations are specifically noted by Contractor and accepted by Architect in writing.
5. Demolish and remove mock-ups when directed by Architect unless accepted to become part of the completed Work.

E. Layered Mock-Up for Construction Quality Purposes: In addition to the Mock-ups described above and prior to Pre-Installation Conference; build layered mock-ups for each type of plastering assembly specified to demonstrate qualities of materials and to verify Work construction execution quality with Contract Documents (not for aesthetic qualities), using specified materials:

1. Notify Architect 7 days in advance of the dates and times when mock-up will be installed.
2. Build mock-up in the location and of the size indicated or, if not indicated, as directed by Architect. Contractor shall provide structural support framework.

    a. Show typical components, attachments to building structure, and requirements of installation.
    b. Clean exposed faces of mock-up prior to presentation to Architect.

3. Obtain Architect's acceptance of mock-ups before starting installation of permanent Work for the Project. Acceptance of mock-ups does not constitute acceptance of deviations from the Contract Documents contained in mock-ups unless such deviations are specifically noted by Contractor, submitted to Architect in writing, and accepted by Architect in writing.
4. Protect accepted mock-ups from the elements with weather-resistant membrane.
5. Maintain accepted mock-ups during construction in an undisturbed condition as a standard for review of the completed Work.
6. Arrange installation of products and materials in layered fashion to allow observation into concealed areas of assembly; including the following:

    a. Plastering in specified finish, including accents and design details.
    b. Wall back-up, complete with steel studs, sheathing, building paper, and air and water barrier.
    c. Wall back-up, complete with cementitious substrate and waterproofing.
    d. Metal lath and accessories.
    e. Head, jamb, and sill of window or door opening:

        1) Head shall include lintels, flashings, and accessories.
        2) Jambs shall include edge flashings.
        3) Sills shall include flashings.

7. Acceptance of layered mock-ups is for following Work execution qualities:

a. Application of modified cement waterproofing.
b. Installation and attachment of building paper and metal lath.
c. Application of Portland cement plaster.
d. Installation and attachment of accessories, including joinery.
e. Plastering uniformity and consistency.
f. Attachments of plaster system foam trim.
g. Other material and construction qualities as determined by Architect.

8. Demolish and remove mock-ups when directed by Architect.

1.5 PRE-INSTALLATION CONFERENCE

A. Pre-Installation Conference: Before Work begins, conduct conference at Project site.

1. Participants:

a. Architect.
b. Contractor, including superintendent.
c. Installer, including project manager and supervisor.
d. If requested, Manufacturer's qualified technical representative.
e. Installers of other construction interfaced with Work.

2. Minimum Agenda: Installer shall demonstrate understanding of the Work required by describing detailed procedures for preparing, installing, and cleaning the Work. Demonstration shall include, but not be limited to, following topics:

a. Tour representative areas of Work, inspect and discuss condition of substrate, and other preparatory work performed by other trades.
b. Review Contract Document requirements.
c. Review approved submittals.
d. Review inspection and testing requirements.
e. Review environmental conditions and procedures for coping with unfavorable conditions.
f. Resolve deviations or differences between Contract Documents and the manufacturer's specifications.

3. Record discussions, including decisions and agreements, and prepare report.

1.6 DELIVERY, STORAGE, AND HANDLING

A. Delivery: Deliver products in original unopened packages or containers, fully identified with intact and legible labels.

B. Storage: Store materials inside under cover and keep them dry and protected against damage from weather, direct sunlight, surface contamination, corrosion, construction traffic, and other causes.

1.7 PROJECT CONDITIONS

A. Comply with ASTM C 926.

B. Exterior Plasterwork:

1. Apply and cure plaster to prevent plaster drying out during curing period. Use procedures required by climatic conditions, including moist curing, providing coverings, and providing barriers to deflect sunlight and wind.

    a. Protect Work against uneven and excessive evaporation and from strong flows of dry air, both natural and artificial.

2. Apply plaster when ambient temperature is greater than 40 deg F (4.4 deg C).
3. Protect plaster coats from freezing for not less than 48 hours after set of plaster coat has occurred.

    a. Provide heat and protection (temporary or permanent) as required to protect Work from freezing.
    b. Distribute heat uniformly to prevent concentration of heat near sources; provide deflection or protective screens.

C. Stain Prevention: Prevent soil from staining exposed plaster. Immediately remove soil from exposed plaster.

1. Protect base of walls from rain-splashed mud and plaster splatter.
2. Protect sills, ledges, and projections from plaster droppings.
3. Protect surfaces of window and door frames, and other adjacent with painted and integral finishes from plaster droppings.
4. Turn scaffolding planks near work on edge at end of each day to prevent rain from splashing plaster droppings or dirt onto face of exposed plaster.

D. Interior Plasterwork: Maintain room temperatures at greater than 40 deg F (4.4 deg C) for at least 48 hours before plaster application, and continuously during and after application.

1. Avoid conditions that result in plaster drying out during curing period. Distribute heat evenly; prevent concentrated or uneven heat on plaster.
2. Ventilate building spaces as required to remove water in excess of that required for hydrating plaster in a manner that prevents drafts of air from contacting surfaces during plaster application and until plaster is dry.

E. Factory-Prepared Finishes: Comply with manufacturer's written recommendations for environmental conditions for applying finishes.

1.8 COORDINATION

A. Coordinate installation of products and systems with interfacing and adjoining construction to provide a successful installation without failure.

PART 2 - PRODUCTS

2.1 MANUFACTURERS AND PRODUCTS

A. Acceptable Manufacturers and Products: Subject to compliance with requirements of Contract Documents as judged by the Architect, provide product by one of manufacturers listed. If not listed, submit as substitution according to the Conditions of the Contract and Division 01 Section "Substitution Procedures".

B. Basis of Design (Product Standard): Contract Documents are based on products specified under each item below to establish a standard of quality. Other available manufacturers with products having equivalent characteristics may be considered, provided deviations are minor and does not change intent of Contract Documents as judged by Architect.

2.2 MATERIALS, GENERAL

A. Single Source Responsibility: Furnish each type of product from single manufacturer. Provide secondary materials only as recommended by manufacturer of primary materials.

2.3 PERFORMANCE REQUIREMENTS

A. Windborne-Debris-Impact-Resistance Performance: Comply with impact resistance testing requirements for Wind Zone.

2.4 SUSPENDED FRAMING SYSTEM FOR SOFFITS AND CEILINGS

A. Material Quality Standard: Provide components of sizes indicated but not less than that required to comply with ASTM C 754 for conditions indicated.

B. Protective Coating - Standard Applications: ASTM A 653 / A 653M, G60 (Z180) hot-dip galvanized coating.

C. Protective Coating - High Moisture / Humidity (Coastal) Applications: ASTM A 653 / A 653M, G90 (Z275) hot-dip galvanized coating.

D. Hanger Attachments to Concrete:

1. Anchors: Fabricated from corrosion-resistant materials with holes or loops for attaching hanger wires and capable of sustaining, without failure, a load equal to 5 times that imposed by construction as determined by testing according to ASTM E 488 by a qualified independent testing agency.

    a. Cast-in-place anchor, designed for attachment to concrete.
    b. Post-installed chemical anchor.
    c. Post-installed expansion anchor.

2. Powder-Actuated Fasteners: Suitable for application indicated, fabricated from corrosion-resistant materials, with clips or other devices for attaching hangers of type indicated, and capable of sustaining, without failure, a load equal to 10 times that imposed by construction as determined by testing according to ASTM E 1190 by a qualified independent testing agency.
3. Manufacturers:

    a. Construction Materials, Inc.
    b. Heckman Building Products, Inc.
    c. Hilti Corp.
    d. ITW Ramset/Red Head.
    e. Powers Fasteners.
    f. Simpson Strong Tie Anchor Systems.

4. For post-tensioned concrete, anchors shall not exceed 1 in (25 mm) embedment. Obtain Structural Engineer's written approval for all proposed anchors in post-tensioned concrete prior to installation.

E. Wire:

1. Material Quality Standard: ASTM A 641 / A 641M, Class 1, zinc-coated, soft annealed, mild steel wire.
2. Tie Wire Minimum Size: Single 0.0625 in (16 gage) (1.6 mm) diameter strand, or double 0.0475 in (18 gage) (1.2 mm) diameter strands.
3. Hanger Wire Minimum Size: 0.1620 in (8 gage) (4.12 mm) diameter.

F. Channels: Cold-rolled steel, ASTM C 645, 0.0538 in (16 gage) (1.3 mm) minimum thickness of base metal (uncoated), and as follows:

1. Carrying Channels: 1-1/2 in (38 mm) deep by 1/2 in (12 mm) wide flanges; 414 lbs per 1000 ft (0.616 kg/m).
2. Furring Channels: 3/4 in (19 mm) deep by 1/2 in (12 mm) wide flanges; 277 lbs per 1000 ft (0.412 kg/m).

2.5 PLASTERING MATERIALS

A. Portland Cement:

1. Product Quality Standard: ASTM C 150, Type I; except Type III may be used for cold-weather construction.
2. Color: Natural gray color or white cement as required producing color required.
3. Manufacturers:

    a. Lafarge North America.
    b. Lehigh Cement Co.
    c. Lone Star Industries, Inc.
    d. Rinker Materials.
    e. Royal White Cement.

B. Types of Cement Not Permitted: ASTM C 91 masonry cement and ASTM C 1329 mortar cement are not acceptable and shall not be used.

C. Hydrated Lime:

1. Product Quality Standard: ASTM C 206, Type S.
2. Manufacturers:

    a. Graymont Dolime (OH) Inc.
    b. Rockwell Lime Co.

D. Sand Aggregate: ASTM C 897.

E. Reinforcing Fiber: Alkaline-resistant glass or polypropylene, 1/2 in (12 mm) long, free of contaminants, manufactured for use in Portland cement plaster.

F. Water: Potable.

G. Ready-Mixed Base Coat Plaster: Factory-proportioned and pre-blended Portland cement, lime, alkali-resistant fibers, sand and proprietary additives complying with ASTM C926 for use in scratch and brown coat applications. Components of pre-blended mixes are limited to the Plastering Materials and standards listed in this section.

1. Available Manufacturers and Products:

   a. LaHabra, a brand of ParexLaHabra, Inc.; Fiber-47 Fastwall Scratch and Brown Fiber Reinforced Sanded.
   b. Quikrete Companies; Scratch and Brown Coat Fiber Reinforced Stucco.
   c. Spec Mix; Scratch and Brown Fiber Reinforced Stucco.

H. Acrylic Admixture:

1. Description: Water-based, non-redisperable one-component acrylic polymer, resistant to ultraviolet light degradation.
2. Available Manufacturers and Products:

   a. BASF, MasterEmaco A 660 (Formerly Thoro; Acryl 60).
   b. Euclid Co.; Akkro 7-T.
   c. Larsen Products Corp.; Acrylic Admix-101.
   d. Parex; Adacryl.
   e. Mapei Corp.; Planicrete AC.
   f. United States Gypsum Company (USG); Acri-Add 100 percent Acrylic Add-Mix Fortified.

2.6 FINISH SYSTEMS

A. Textured Acrylic Coating Finish System:

1. Description: Water-based, high-build 100 percent acrylic, waterproof coating system formulated with acrylic emulsion, colorfast mineral pigments, fine aggregates, fillers, and other proprietary ingredients; for use over Portland cement plaster base coats. Include manufacturer's recommended primers and sealing topcoats for acrylic-based finishes.
2. Available Manufacturers and Products:

   a. BASF Building Systems; MasterProtect HB 400 (Formerly Thoro Thorocoat Tex).
   b. Euclid Chemical Company; Tamms Tammscoat.
   c. PPG Industries, Inc.; Perma-Crete Texture Finishings
   d. Sherwin-Williams Company; UltraCrete Textured Masonry Topcoat.
   e. Textured Coatings of America, Inc.; Tex-Cote 600 Textured Coating.

3. Acrylic Primer: Manufacturer recommended acrylic primer.

4. Basis of Design: BASF, MasterProtect HC 400 (Formerly Thoro; Thorocoat).

   a. Color and Texture: Provide products equivalent to color, finish, appearance, texture, and quality of products scheduled or indicated in Design Selections.

5. Related Section: Refer to Division 09 Section Textured Acrylic Coatings.

B. Textured Acrylic Coating Finish System:

1. Description: Factory-mixed acrylic emulsion coating system formulated with colorfast pigments, fine aggregates, fillers, and other proprietary ingredients; for use over Portland cement plaster base coats. Include manufacturers recommended primers and sealing topcoats for acrylic-based finishes.
2. Available Manufacturers and Products:

    a. Parex; DPR Finish.
    b. Dryvit; DPR Finish.
    c. Sto Corp.; Stolit Finish.
    d. BASF; Acrylic Finish.

3. Acrylic Primer: Manufacturer recommended acrylic primer. Application of primer is required.

C. Ready-Mixed Integrally-Colored Cement Plaster Finish Coat:

1. Description: Mill-mixed Portland cement, aggregates, coloring agents, and proprietary ingredients.
2. Basis of Design Color and Texture Selection: Provide products equivalent to color, finish, appearance, texture, and quality of products as scheduled or as indicated in Design Selections.
3. Manufacturers and Products:

    a. California Stucco Products Corp.; Conventional Portland Cement Stucco.
    b. El Rey Stucco Company, Inc., a brand of ParexLaHabra, Inc.; Premium Stucco Finish.
    c. Florida Stucco; Florida Stucco.
    d. LaHabra, a brand of ParexLaHabra, Inc.; Exterior Stucco Color Coat.
    e. Omega Products International, Inc.; ColorTek Exterior Stucco.
    f. Quikcrete; Quikcrete Finish Coat Stucco, No. 1201.
    g. SonoWall, BASF Wall Systems, Inc.; Thoro Stucco.
    h. United States Gypsum Company (USG); Oriental Exterior Finish Stucco.

D. Exterior Adhered Masonry Veneer: As specified in Division 04 Section Adhered Masonry Veneer.

2.7 EMBEDDED FLASHING MATERIALS

A. Sheet Metal Flashing: Provide metal flashing, where flashing is exposed or partly exposed and where indicated, complying with SMACNA "Architectural Sheet Metal Manual" and as follows:

1. Material:

    a. Product Quality Standard: ASTM A 240 / A 240M or A 666, Type 304.
    b. Description: Stainless steel, 2D annealed finish, not less than 0.025 in (24 ga) (0.64 mm) thick, unless noted otherwise.

2. Solder:

    a. Product Quality Standard: ASTM B 32, Grade Sn60.
    b. Description: Solder with acid flux of type recommended by stainless steel sheet manufacturer; use a noncorrosive rosin flux over tinned surfaces.

B. Rubberized Asphalt Flashing:

1. Description: Minimum 40 mils (1.0 mm) thick, consisting of slip-resisting polyethylene-film top surface laminated to layer of butyl or SBS-modified asphalt adhesive, with release-paper backing; cold applied. Provide primer when recommended by underlayment manufacturer.
2. Manufacturers and Products:

    a. Carlisle Coatings & Waterproofing; CCW-705-TWF Thru-Wall Flashing.
    b. Grace Construction Products; Perm-A-Barrier Wall Flashing.
    c. Henry Co., Blueskin TWF.
    d. Polyguard Products, Inc.; 401 Membrane.
    e. Tamko Building Products; TW-Thru Wall Flashing.
    f. Williams Products, Inc.; Everlastic MF-40.

C. Sealant for Sheet Metal Flashing: Exterior non-sag silicone sealant as specified in Division 07 Section Joint Sealants.

2.8 METAL ACCESSORIES

A. General: The specifications for the accessories listed below are based upon the specified zinc alloy products as the design standards.

B. Casing Beads:

1. Product Description: Square edge, expanded metal flange; perforated with minimum 1/4 in (6 mm) diameter holes at 12 in (300 mm) on centers when used at bottom of plaster, non-perforated elsewhere; size required for plaster thickness.
2. Material Quality Standard: ASTM B 69, 99 percent pure zinc alloy.
3. Manufacturers and Products:

    a. Alabama Metal Industries Corp. (AMICO); X-66 Casing Bead (Plaster Stop).
    b. California Expanded Metal Co. (CEMCO); No. 66 Expanded Flange Casing Bead.
    c. Clark Western; No. 66 Expanded Flange Casing Bead.
    d. Dietrich Metal Framing; No. 66 Expanded Flange Casing Bead.
    e. Niles Building Products Co.; No. 66-X Expanded Flange Casing Bead.

C. Outside Corner Reinforcement:

1. Product Description: Small nose corner beads, expanded metal flanges, with continuous stiffening ribs.
2. Material Quality Standard: ASTM B 69, 99 percent pure zinc alloy.
3. Manufacturers and Products:

    a. AMICO (Alabama Metal Industries Corp.); X2 Cornerbead.
    b. Clark Western; No. 2A Expanded Corner Bead.

D. Expansion Joint:

1. Product Description: Two-piece, slip joint that allows multi-directional movement; size required for plaster thickness.
2. Material Quality Standard: ASTM B 69, 99 percent pure zinc alloy.

3. Manufacturer and Product:

    a. California Expanded Metal Co. (CEMCO); M-Slide Expansion Joint.

E. Control Joint:

1. Product Description: Back-to-back J-shape that permits positive locking with plaster, expanded metal lath flange; size required for plaster thickness.
2. Material Quality Standard: ASTM B 69, 99 percent pure zinc alloy.
3. Manufacturers and Products:

    a. Alabama Metal Industries Corp. (AMICO); XJ15 Griplock Expansion Control Joint.
    b. Clark Western; No. XJ15 Control Joint.
    c. Dietrich Metal Framing; Zinc Control Joint.
    d. Niles Building Products Co.; Double J Expansion Control Joint.
    e. Western Metal Lath, Inc.; XJ15-3.

2.9 METAL LATH

A. Metal Lath:

1. Product Quality Standard: ASTM C 847 with ASTM A 653 / A 653M, G60 (Z180), hot-dip galvanized zinc coating.
2. Description: Expanded, diamond mesh lath, 3.4 lb/sq yd (1.8 kg/sq m), of following types:

    a. Self-furred (dimpled) over solid substrates.
    b. Flat type suspended soffits and ceilings.

3. Manufacturers:

    a. Alabama Metal Industries Corp. (AMICO); a Gibraltar Industries Company.
    b. California Expanded Metal Co. (CEMCO).
    c. Clark Western Building Systems.
    d. Dietrich Metal Framing; a Worthington Industries Company.
    e. Marino / WARE.
    f. Niles Building Products Co.
    g. Phillips Manufacturing Co.

B. Lath Tie Wire: ASTM A 641 / A 641M, Class 1 galvanized, not less than 0.0475 in (18 ga) (1.2 mm) diameter, soft temper.

C. Strip Lath Reinforcement:

1. Product Description: Strips of expanded metal lath, 4 in (100 mm) to 6 in (150 mm) wide, with smooth edges.
2. Material Quality Standard: Hot-dip galvanized steel, ASTM A 653 / A 653M, G60 (Z180) zinc coating.
3. Manufacturers and Products:

    a. Alabama Metal Industries Corp. (AMICO); Striplath.
    b. California Expanded Metal Co. (CEMCO); Stripite.

c. Clark Western; Striplath.
d. Dietrich Metal Framing; Strip Lath (LAST).

D. Inside Corner Reinforcement:

1. Product Description: Strips of galvanized expanded metal lath, minimum 3 in (75 mm) wide flanges, folded to 105 degrees, with smooth edges.
2. Material Quality Standard: Hot-dip galvanized steel, ASTM A 653 / A 653M, G60 (Z180) zinc coating.
3. Manufacturers and Products:

a. Alabama Metal Industries Corp. (AMICO); Cornalath.
b. California Expanded Metal Co. (CEMCO); Cornerite.
c. Clark Western; Cornerite.

2.10 FASTENERS

A. Screw Fasteners for Attaching Metal Lath to Sheathed Steel Studs:

1. Product Quality Standard: ASTM C 1063.
2. Description: Self-drilling and self-tapping screws with pan or wafer type head of size to engage 3 strands of lath; fabricated from corrosive resistant or nonferrous metal; in lengths required to achieve minimum penetration of 3/8 in (10 mm) beyond stud.

B. Powder Actuated Fasteners for Attaching Metal Lath to Cementitious Substrates:

1. Product Quality Standard: ANSI A10.3.
2. Product Description: Low velocity, powder actuated fasteners, stainless steel drive pins, length as required for minimum 3/4 in (19 mm) long penetration, with washers sized engage 3 strands of lath; powder loads suitable for application indicated; sufficient to correctly attach or anchor metal lath to substrate indicated without failure.
3. Manufacturers:

a. Hilti Corp.
b. ITW Ramset/Red Head.
c. Powers Fasteners.
d. Simpson Strong Tie Anchor Systems.

2.11 RELATED MATERIALS

A. Building Paper:

1. Product Quality Standard: Fed. Spec. UU-B-790a, Type 1, Style 2, Grade D.
2. Description: Asphalt-saturated heavy duty building paper.
3. Minimum Physical Properties and Performance Requirements:

a. Water Penetration Resistance: Minimum 30 minutes according to ASTM D 779.
b. Water Vapor Transmission: 14 perms according to ASTM E 96, Procedure A.

4. Manufacturer and Product: Fortifiber Corp.; Two Ply Jumbo Tex.

B. Drainage Mat: Sto Drain Screen drainage mat.

1. Description: Sto power wall drain Screen is a stucco wall assembly with continuous air and moisture barrier and advanced cavity wall design.
2. Properties:
   a. Nominal assembly thickness of 1”, capable of achieving+65, -48 psf wind load resistance
b. Fire resistance of ASTM E 119 1 hour.

2.12 PLASTER MIXES AND COMPOSITIONS

A. Mix Quality Standard: ASTM C 926, Types as indicated.

B. Mixing:

1. General:

   a. Size mixer to produce batches that will be applied within maximum 1-1/2 hours after mixing.
   b. Accurately proportion materials for initial plaster mixture using measuring devices of known volume.
   c. Use damp, loose sand.
   d. Retempering of base coat mixes is permitted one time only after initial mixing. Plaster not used with 1-1/2 hours of initial mixing shall not be used.
   e. Retempering of finish coat mixes is not permitted.

2. Mechanical Mixing:

   a. Mix each batch separately; double batching with single batch discharge is not permitted.
   b. Maintain mixer in clean condition before, during, and after mix preparation. Remove partially set and hardened plaster from mixer drum before next batch.
   c. Maintain mixer in continuous operation while charging mixer. Add water to bring mix to desired consistency. Continue mixing for 3 to 5 minutes after all ingredients have been added to mixer.

3. Hand Mixing: Not permitted.

C. General Job Mixed Base Coat Mix: Proportion materials for respective coats in parts by volume per sum of cementitious materials for aggregates to comply with following requirements for each method of application and plaster base indicated. Adjust mix proportions within limits specified to attain workability.

1. Reinforcing Fiber Content: Add fiber to base-coat mixes after ingredients have mixed at least 2 minutes. Comply with fiber manufacturer's written instructions for fiber quantities in mixes, but do not exceed 1 lb of fiber per cu yd (0.6 kg of fiber per cu m) of cementitious materials.
2. Acrylic Admixture: Proportion in accordance with manufacturers recommendations and used in place of mixing water.

D. Mixes for Direct Bond Plastering over Cementitious Substrate:

1. Waterproofing: Modified cement waterproofing as specified elsewhere in this Section.
2. Brown Coat:

a. 1 part Portland cement.
b. 3/4 to 1-1/2 parts lime.
c. 3 to 5 parts aggregate.
d. Reinforcing fibers.
e. Acrylic admixture.

E. Mixes for Plastering over Metal Lath:

1. Scratch Coat Mix:

a. 1 part Portland cement.
b. 0 to 3/4 parts lime.
c. 2-1/2 to 4 parts aggregate.
d. Reinforcing fibers.
e. Acrylic admixture.

2. Brown Coat Mix:

a. 1 part Portland cement.
b. 3/4 to 1-1/2 parts lime.
c. 3 to 5 parts aggregate, but not less than volume of aggregate used in scratch coat.
d. Reinforcing fibers.
e. Acrylic admixture.

F. Finish Coat: Textured acrylic coating finish system as specified elsewhere in this Section. Mix as required by manufacturer's written instructions.

G. Finish Coat: Elastomeric coating as specified in Division 09 Section Elastomeric Coatings.

H. Finish Coat: Integrally colored cement plaster finish. Mix as required by manufacturers written instructions.

I. No finish coat at adhered masonry veneer installations.

2.13 METAL FLASHING FABRICATION

A. Field Measurements: Where metal flashing is to fit, cope, or be tailored to other construction, check actual dimensions of other construction by accurate field measurements before fabrication.

B. Fabrication Procedures: Fabricate continuous flashings in sections 96 in (2400 mm) long minimum, but not exceeding 12 ft (3.6 m). Provide splice plates at joints of formed, smooth metal flashing.

1. Shop form flashing on a bending brake.
2. Shape, trim and hand seam on bench as far as practical with proper tools.

3. Form exposed metal Work without excessive oil canning, buckling, and tool marks and that is true to line and levels indicated.
4. Make angle bends and folds for interlocking metal with full regard for expansion and contraction to avoid buckling or fullness in metal after installation.
5. Form materials to shape indicated with straight lines, sharp angles and smooth curves.
6. Fold and hem exposed edges of flashings.

C. Flashing Joinery: Fabricate interior and exterior corners, intersections, and complex flashing conditions in shop, rather than in field, with properly folded, constructed and continuous soldered joints. Field fabricated units are not permitted and will not be allowed.

PART 3 - EXECUTION

3.1 EXAMINATION

A. Acceptance of Surfaces and Conditions: Examine substrates to which Portland cement plastering will be applied for compliance with requirements, installation tolerances and other conditions affecting performance. Proceed only when unsatisfactory conditions have been corrected in a manner complying with Contract Documents. Starting Work within a particular area will be construed as acceptance of surface conditions.

3.2 INSTALLATION, GENERAL

A. Installation Quality Standards: In addition to standards listed elsewhere, perform Work according to following, unless otherwise specified:

1. Respective manufacturer's written installation instructions.
2. Accepted submittals.
3. Contract Documents.

3.3 PREPARATION

A. General: Comply with manufacturers instructions, recommendations, and specifications for cleaning and surface preparation. Surfaces shall have no defects, contaminants, or errors which would result in poor or potentially defective installation or would cause latent defects in Work.

B. Surface Conditioning: Immediately before plastering, dampen cementitious substrates that are indicated for direct application of plaster, except where a bonding agent has been applied. Determine and apply amount of moisture and degree of saturation that will result in optimum suction for plastering.

C. Substrate Condition: Verify that gypsum sheathing and air and water barrier are properly installed.

D. Steel Stud Framing: Locate and identify horizontal deflection tracks at top of wall framing.

E. Cleaning: Remove form oils, coatings, laitance, efflorescence, mortar, loose material and substances that would adversely affect or reduce bonding.

F. Temporary Grounds and Screeds: Install as necessary to ensure accurate rodding of plaster to true surfaces; coordinate with scratch-coat work.

3.4 INSTALLING FRAMING FOR SUSPENDED SOFFITS AND CEILINGS

A. General: Install framing level, plumb, square, or curved as required to receive Portland cement plastering.

B. Hangers: Suspend hangers from building structural members and as follows:

1. Install hangers plumb and free from contact with mechanical and electrical equipment, insulation or other objects within plenum. Within limitations allowed by installation quality standards, splay hangers only where required to miss obstructions and offset resulting horizontal forces by bracing, countersplaying, or other equally effective means.
2. Where width of ducts and other construction within plenum produces hanger spacings that interfere with location of hangers required to support framing, install supplemental suspension members and hangers in form of trapezes or equivalent devices. Size supplemental suspension members and hangers to support loads within performance limits established by installation quality standards.
3. Secure wire hangers by looping and wire-tying, either directly to structures or to inserts, eyescrews, or other devices and fasteners that are secure and appropriate for substrate, and in a manner that will not cause them to deteriorate or otherwise fail.
4. Secure rod, flat, or angle hangers to structure, including intermediate framing members, by attaching to inserts, eyescrews, or other devices and fasteners that are secure and appropriate for structure and hanger, and in a manner that will not cause hangers to deteriorate or otherwise fail.

C. Carrying Channels: Space not over 36 in (900 mm) on centers with hanger wires located at 48 in (1200 mm) on centers and within 6 in (150 mm) of carrying channel ends.

D. Furring Channels: Space furring channels not over 16 in (400 mm) on centers and wire tie to carrying channel at each crossing.

E. Compression Strut to Resist Vertical Uplift: Install one carrying channel as a compression strut for every 30 sq ft (9 m), located between carrying channels and structure above. Secure wire tie to vertical members.

F. Framed Openings: Frame openings in grillage with carrying channels supported on separate wire hangers and set frames for recessed items.

G. Building Expansion Joints: Provide double carrying channels or furring channels side by side where expansion joints occur. Do not continue channels over or across building expansion joints.

3.5 INSTALLING BUILDING PAPER

A. Install building paper barrier over the face of air and water barrier:

1. Delay installation until Portland cement plaster Work is to begin to minimize exposure of building paper.

2. Beginning at bottom of substrate wall, align horizontally; pull taut to eliminate fishmouths, wrinkles, buckles, and kinks; install in shingled manner to shed water without interception by exposed edges.
3. Offset building paper joints from sheet air and water barrier; lap horizontal joints 6 in (150 mm); lap vertical end joints 12 in (300 mm); stagger end laps; lap 12 in (300 mm) at inside and outside corners; lap flashing 6 in (150 mm).

3.6 INSTALLING METAL LATH

A. Installation of Metal Lath at Sheathed Steel Stud Walls covered with Building Paper and Air and Water Barrier:

1. Install multiple sheets of metal lath to form continuous plane over substrates.
2. Layout and arrange so that metal lath joints will not occur over vertical and horizontal laps of previously installed weather resisting sheets.
3. Begin installation at bottom of substrate wall; install with long dimension at horizontal and stagger vertical end laps.
4. Lap horizontal sides not less than 1/2 in (12 mm), and securely tie between steel stud supports with lath tie wire at not more than 9 in (225 mm) on centers vertically.
5. Securely attach metal lath to each steel stud support with screw fasteners at not more than 7 in (175 mm) on centers vertcially.
6. Lap vertical ends not less than 1 in (25 mm).

    a. If lap occurs over a steel stud support, securely attach with screw fasteners at not more than 7 in (175 mm) on centers vertically.
    b. If lap does not occur over a steel stud support, securely tie with lath tie wire at not more than 9 in (225 mm) on centers vertically.

7. Screw fasteners shall extend through not less than 3 strands of metal lath, weather resisting sheets, gypsum sheathing and into steel stud; tip of fastener shall extend beyond stud not less than 3/8 in (10 mm).
8. Do not extend metal lath behind or across control and expansion joints; attach each side of metal lath to separate joint accessory flange.
9. Do not attach metal lath to horizontal deflection track at top of wall framing.

B. Installation of Metal Lath at Cementitious Substrates:

1. Install multiple sheets of metal lath to form continuous plane over substrates.
2. Install with long dimension at horizontal and stagger vertical end laps.
3. Lap horizontal sides not more than 2 in (50 mm), and ensure horizontal edge of upper metal lath laps, or shingles, over lower metal lath.
4. Securely attach metal lath with powder actuated fasteners at following locations:

    a. At each corner.
    b. At midpoint of long side.
    c. At not more than 16 in (400 mm) on centers horizontally and not more than 7 in (175 mm) on centers vertically.

5. Lap vertical ends not more than 2 in (50 mm).
6. Ensure there is lath-to-lath continuity.

C. Installation of Metal Lath at Suspended Ceilings and Soffits:

1. Install multiple sheets of metal lath to form continuous plane over suspended framing.
2. Install with long dimension perpendicular to furring channels and stagger end laps.
3. Lap sides and ends not less than 2 in (50 mm) and securely tie with lath tie wire at not more than 9 in (225 mm) on centers.
4. Securely attach at each carry channel with lath tie wire at not more than 6 in (150 mm) on centers.

3.7 INSTALLING EMBEDDED FLASHINGS

A. Design Intent: Drawings may not necessarily indicate or describe full extent of Work required for completion of embedded flashings.

B. Reglets and Nailers: Install for flashing and other related construction where they are shown to be built into plaster.

C. Preparation: Substrate surfaces shall be smooth and free from projections that could puncture flashing.

D. Flashing Installation:

1. Install true to line and levels indicated; minimize quantity of lap joints by using longest units possible.
2. Set in proper locations with outside hemmed edges flush with building face location indicated; securely attach to substrate with same fasteners as used for attaching metal lath.
3. Terminate ends of horizontal flashings with properly folded and constructed end dams with a depth of not less than 1 in (25 mm), with continuous soldered joints.
4. At lap joints of horizontal flashings, form neat and aligned joints by interlocking splice plate within hemmed edge of sheet metal flashing profile; apply sealant and rubberized asphalt flashing as indicated to create water-resistant joint.

E. Examination and Repair: Immediately prior to plastering Work, examine exposed surfaces of flashing and seal penetrations and damaged areas with rubberized asphalt flashing material before covering.

3.8 INSTALLING MODIFIED CEMENT WATERPROOFING for direct bond Plaster

A. Application:

1. Apply number of coats recommended by manufacturer, but not less than two, by method suitable for substrate.
2. Thickness of Modified Cement Waterproofing: Total cured nominal thickness of 1/16 in (1.5 mm).
3. Allow sufficient time between coatings to eliminate possibility of cementitious substrate joints telegraphing.
4. Texture final finish to provide keying for subsequent plaster.
5. Allow sufficient time for curing before applying plaster.

3.9 INSTALLING ACCESSORIES

A. General Requirements:

1. Install at locations indicated according to installation quality standard.
2. Attach securely with fasteners to hold accessories in place and alignment during plastering; secure at ends and not more than 12 in (300 mm) on centers.
3. Install longest lengths possible, avoid butt joints.
4. Install so that finished plaster surfaces will be true to line, level, plumb, square, curved or as otherwise required, without excessive thickness of plaster.
5. Set vertical accessories plumb, and horizontal accessories level, and form true and neat corners.
6. Vertical accessories shall pass through horizontal accessories.
7. Miter or cope at corners; install with tight joints seated with sealant and in alignment.
8. Bed accessories in sealant as indicated on Drawings.

B. Casing Beads: Install continuous at edges and terminations of plaster. Use perforated beads at bottom of plaster areas and non-perforated at sides and top.

C. Interior Corners: Install continuous inside corner reinforcement.

D. Exterior Corners: Install continuous outside corner reinforcement.

E. Corners of Openings: Install strip lath reinforcement diagonally.

F. Base of Wall: Install foundation weep screed at dimension above grade indicated.

G. Expansion and Control Joints:

1. Cementitious Substrates: As indicated on Drawings. If not indicated on drawings, then as required to align with joints in substrates behind or below plaster system.
2. Metal Lath over Sheathing Substrates or at Soffits: As indicated on Drawings. If not indicated on drawings, then as follows:

    a. Divide plaster into areas (panels) of following maximum sizes with length-to-width ratios of not greater than 2-1/2 to 1:

        1) Vertical Surfaces: 144 sq. ft. (13.4 sq. m).
        2) Horizontal Surfaces: 100 sq. ft. (9.3 sq. m).

    b. Distances between control joints are not to be greater than 18 ft (5.4 m) on centers.
    c. At door, window, and other openings, joints are to radiate vertically and horizontally from each corner.

3. Metal Lath over Sheathing Substrates (at Adhered Masonry Veneer Installations): As indicated on Drawings. If not indicated on drawings, then as follows:

    a. Distance between Control Joints: 1/2 in (12 mm) wide joints not more than 12 ft (3.6 m) on center each direction and a length-to-width ratio of 3 to 1.

        1) Vertical Surfaces: Not more than 144 sq. ft. (13.4 sq. m).
        2) Horizontal Surfaces: Not more than 100 sq. ft. (9.3 sq. m).

3.10 INSTALLING PORTLAND CEMENT PLASTER BASE COATS

A. General:

1. Apply plaster by hand or by pneumatic wet gun application method.
2. Establish and follow an application pattern that produces an even drying surface.
3. Avoid using materials that are frozen, caked, lumpy, dirty, or contaminated by foreign materials.
4. Avoid using excessive water in application of plaster materials.
5. Make internal corners and angles square; finish external corners flush with corner beads, square and true with plaster faces.

B. Plaster Base Coats at Direct Bond Locations:

1. Modified Cement Waterproofing: Apply to uniformly cover substrates.
2. Brown Coat: After modified cement waterproofing coat has cured, apply brown coat to uniform thickness with sufficient material and pressure to ensure tight, uniform bond.
3. Thickness of Plaster Base Coat:

    a. Brown Coat: 3/8 in (10 mm) thick.

C. Plaster Base Coats at Metal Lath (Wall) Locations:

1. Scratch Coat:

    a. Apply to uniform thickness indicated to completely embed metal lath.
    b. Uniformly score surface approximately 1/8 in (3 mm) deep.
    c. Moist cure each coat in accordance with ASTM C 926 before applying subsequent coatings.

2. Brown Coat:

    a. After scratch coat has cured to be sufficient rigid, apply brown coat to uniform thickness indicated over damp scratch coat with sufficient material and pressure to ensure tight, uniform bond.
    b. Rod to true, even plane, filling surface defects with plaster.
    c. Uniformly float surface.
    d. Moist cure each coat in accordance with ASTM C 926 before applying subsequent coatings.

3. Thickness of Plaster Base Coats:

    a. Scratch Coat: 3/8 in (10 mm) thick.
    b. Brown Coat: 3/8 in (10 mm) thick.

D. Plaster Base Coats at Metal Lath (Soffit) Locations:

1. Scratch Coat:

    a. Apply to uniform thickness indicated to completely embed metal lath.
    b. Uniformly score surface approximately 1/8 in (3 mm) deep.
    c. Moist cure each coat in accordance with ASTM C 926 before applying subsequent coatings.

2. Brown Coat:

a. After scratch coat has cured to be sufficient rigid, apply brown coat to uniform thickness indicated over damp scratch coat with sufficient material and pressure to ensure tight, uniform bond.
b. Rod to true, even plane, filling surface defects with plaster.
c. Uniformly float surface.
d. Moist cure each coat in accordance with ASTM C 926 before applying subsequent coatings.

3. Thickness of Plaster Base Coats:

a. Scratch Coat: 1/4 in (6 mm) thick.
b. Brown Coat: 1/4 in (6 mm) thick.

E. Curing: Moist cure each coat in accordance with ASTM C 926 before applying subsequent coatings.

1. Compensate ambient climatic conditions by providing sufficient moisture in plaster mix to permit continuous hydration of cementitious materials.
2. Allow sufficient time between coats to permit curing and development of sufficient rigidity to resist cracking when subsequent coat is applied.
3. Utilize any of following for curing:

a. Fog spray of water.
b. Vapor barrier over plastered area.
c. Barriers to deflect sunlight and wind.

3.11 INSTALLING FINISH COAT

A. Textured Acrylic Coating Finish Coat: Apply coating system, including primers, finish coats, and sealing topcoats, according to manufacturer's written instructions.

B. Integrally-Colored Cement Plaster Finish Coat:

1. Apply to 1/8 in (3 mm) thickness to provide finish complying with one of following:

a. PCA "Portland Cement Plaster/Stucco Manual", Fifth Edition: Fine sand float.
b. Technical Services Information Bureau (tsib.org): Fine sand float.

2. Thickness: 1/8 in (3 mm).
3. Curing: Cure with same criteria as specified for base coats.

3.12 PLASTERING SYSTEM THICKNESSES

A. Plastering at Direct Bond Locations:

1. Total System Thickness: 5/8 in (15 mm) thick.

B. Plastering at Metal Lath (Wall) Locations:

1. Total System Thickness: 7/8 in (21 mm) thick.

C. Plastering at Metal Lath (Soffit) Locations:

1. Total System Thickness: 5/8 in (15 mm) thick.

3.13 TOLERANCES

A. Finish Plane: Do not deviate more than plus or minus 1/8 in per 10 ft (3 mm per 3 m) from a true plane in finished plaster surfaces, as measured by a 10 ft (3 m) straightedge placed on surface.

3.14 FIELD QUALITY CONTROL

A. Testing Agency: The Owner may employ and pay a qualified independent testing agency to perform field quality control. Materials and installation failing to meet specified requirements shall be replaced at Contractor's expense. Retesting of materials and installations failing to meet specified requirements shall be done at Contractor's expense.

1. Testing: Testing agency will test and evaluate Work during construction.
2. Plaster Tests: Verify plaster composition with specified requirements according to ASTM C 780, Annex A4; made at following times during Work:

    a. First day.
    b. 5 percent.
    c. 15 percent.
    d. 30 percent.
    e. 60 percent.

3. Evaluation of Quality Control Tests: Replace Work in areas where test results fail to comply with requirements indicated.

3.15 ADJUSTING

A. Patching: Cut, patch, repair, and point-up Portland cement plaster as necessary to accommodate other Work. Point-up finish plaster surfaces around items that are built into or penetrate plaster surfaces.

B. Imperfections: Repair or replace Work to eliminate cracks, dents, blisters, buckles, crazing, check cracking, dry outs, efflorescence, sweat outs, excessive pinholes, and similar imperfections and where bond to substrate has failed.

3.16 FINISH SCHEDULE

A. Finish System Color and Texture: As selected by Architect from manufacturer's full range of available standard and custom colors and textures.

END OF SECTION

SECTION 09 2900

GYPSUM BOARD ASSEMBLIES

PART 1 - GENERAL

1.1 SUMMARY

A. Section Includes: Metal framing systems, interior gypsum board faced walls, partitions, and ceiling assemblies, and supplementary items necessary for installation.

1.2 DEFINITIONS

A. Gypsum Board Construction Terminology: Refer to ASTM C 11 for definitions of terms not defined in this Section or in other referenced quality standards.

B. Damage: Stored or installed gypsum board materials shall be classified as defective and nonconforming Work if they have been exposed to wetness or dampness at any time prior to Substantial Completion or if they exhibit evidence of active or dormant mold or mildew.

C. Concentrated Loads: Wall or partition mounted equipment, wall finishes, stone facings, lead lined doors and frames, or ornamentation exceeding 15 lbs/sf uniform load, 75 lb. point load, or 50 lb/ lf lineal load.

1.3 DELEGATED ENGINEERING REQUIREMENTS

A. Contract Documents Design Intent: Drawings and Specifications indicate design intent for products and systems and do not necessarily indicate or specify total Work required. Contract Documents shall not be construed as an engineered design; furnish and install all Work required for a complete installation.

B. Project Framing Analysis: Analyze each framing condition for design loads indicated in performance requirements.

1. Provide framing products in sizes and thicknesses required to meet or exceed the criteria based on project loads, spans and in-service conditions.
2. Material Quality Standard for Metal Framing Components: Provide components of sizes indicated but not less than that required to comply with ASTM C 754 for conditions indicated.

C. Gypsum Board Assemblies Supporting Concentrated Loads - Delegated Engineering Responsibility: Contractor shall employ a qualified professional engineer to provide engineering for products and systems required to support concentrated loads including attachment to building structure required to meet design intent of Contract Documents including, but not limited to, the following.

1. Preparation of structural analysis data including engineering calculations, shop drawings and other submittals signed and sealed by the qualified professional engineer responsible for their preparation.

D. Gypsum Board Assemblies Withstanding Seismic Loads - Delegated Engineering Responsibility: Contractor shall employ a qualified professional engineer to provide engineering for products and systems required to withstand seismic loads including attachment to building structure required to meet design intent of Contract Documents including, but not limited to, the following.

1. Preparation of structural analysis data including engineering calculations, shop drawings and other submittals signed and sealed by the qualified professional engineer responsible for their preparation.

E. Delegated Engineering Professional Qualifications: Professional engineer legally authorized to practice in jurisdiction where Project is located and experienced in providing engineering services of kind indicated for products and systems similar to this Project and has a record of successful in-service performance.

F. Coordination of Contract Documents and Work:

1. Product Variations: In the event of minor differences between products and systems of acceptable or available manufacturer/fabricators. Contractor shall notify Architect of such differences and resolve conflicts in a timely manner. Failure of Contractor to provide notification shall be construed as acceptance of conditions indicated, and changes caused by minor differences between products and Contract Documents shall be included in the Work at no additional cost to Owner.
2. Allowable Adjustments: Minor dimension and profile adjustments may be made in interest of fabrication or erection methods or techniques or ability to satisfy design intent, provided design intent is maintained as determined by Architect. Proposed deviations shall include a detailed analysis of impact to adjacent substrates or other building systems, including related design or construction cost impacts. If accepted by Architect, deviations causing changes in materials, constructability, substrates, or conditions shall be included in the Work at no additional cost to Owner.

1.4 ACTION SUBMITTALS

A. Product Data: Manufacturer's technical literature for each product and system indicated.

1. Include manufacturer's specifications for materials, finishes, construction details, installation instructions, and recommendations for maintenance.

B. Shop Drawings: Show details of fabrication and installation, including plans, elevations, sections, details of components and attachments to other work. Include scaled and dimensioned drawings showing locations of control joints. Distinguish between shop and field-assembled work.

1. Gypsum Board Location Schedule: Provide detailed schedule in format similar to "Gypsum Board Schedule" at end of this Section indicating gypsum board products to be installed and their respective locations.

C. Shop Drawings for Engineered Gypsum Board Assemblies - Concentrated Loads: Scaled and dimensioned drawings showing locations, fabrication, and installation of gypsum board assemblies required to support concentrated loads, including plans, elevations, sections, details of components, and attachments to building structure; include seal and signature of delegated engineering professional responsible for their preparation.

D. Shop Drawings for Engineered Gypsum Board Assemblies - Seismic Loads: Scaled and dimensioned drawings showing locations, fabrication, and installation of gypsum board assemblies required to withstand seismic loads, including plans, elevations, sections, details of components, and attachments to building structure; include seal and signature of delegated engineering professional responsible for their preparation.

1.5 INFORMATIONAL SUBMITTALS

A. Delegated Engineering Calculations: Informational submittal for products indicated to comply with design loads, include structural analysis data signed and sealed by the qualified professional engineer responsible for their preparation; test reports are not acceptable substitute for calculations.

B. Product Test Reports: Written reports based on evaluation of comprehensive tests performed by qualified testing agency indicating that each product complies with requirements.

C. Preconstruction Test Reports for Acoustical Sealant: Compatibility test reports from sealant manufacturer indicating that materials forming joint substrates and joint-sealant backings have been tested for compatibility with sealants; include sealant manufacturer's certification of test results for sealant compatibility and recommendations for primers and substrate preparation needed to obtain adhesion and prevent corrosion of substrate.

D. Field Quality Control Reports: Written report of testing and inspection required by "Field Quality Control".

E. Manufacturer’s Project Acceptance Document: Certification by the manufacturer that its product(s) are approved, acceptable, suitable for use in specific locations, for specific details, and for applications indicated, specified, or required.

F. Qualification Data:

1. For firms and persons specified in "Quality Assurance" Article to demonstrate their capabilities and experience. Include lists of completed projects.

1.6 QUALITY ASSURANCE

A. Manufacturer Qualifications: Manufacturer with not less than 5 years of experience in the successful production and in-service performance of products and systems similar to scope of this Project.

B. Mock-ups: Prior to fabrication and installation, build mock-up for each form of construction and finish required to verify selections made under sample Submittals and to demonstrate aesthetic effects and qualities of materials and execution. Build mock-up to comply with the following requirements, using materials indicated for the completed Work:

1. Build mock-up in the location and of the size indicated or, if not indicated, as directed by Architect. Contractor shall provide structural support framework.

a. Show typical components, attachments to building structure, and requirements of installation.
b. Field Samples for Gypsum Board Finishing: Build 10 ft (3 m) square gypsum board (attached to metal studs) area for each finish level specified. Include not less than one tapered-to-tapered edge gypsum board joint and cut edge-to-cut edge gypsum board joint.

2. Clean exposed faces of mock-up.
3. Notify Architect seven days in advance of the dates and times when mock-up will be installed.
4. Demonstrate the proposed range of aesthetic effects and workmanship.
5. Protect accepted mock-up from the elements with weather-resistant membrane.
6. Obtain Architect's acceptance of mockups before starting fabrication.
7. Maintain mock-ups during construction in an undisturbed condition as a standard for review of the completed Work.
8. Acceptance of mock-ups does not constitute approval of deviations from the Contract Documents contained in mock-ups unless such deviations are specifically noted by Contractor, submitted to Architect in writing, and accepted by Architect in writing.
9. Demolish and remove mock-ups when directed by Architect unless accepted to become part of the completed Work.

C. Fire Resistance Rated Assembly Characteristics: Provide materials and construction identical to those tested according to ASTM E 119/NFPA 251/UL 263 by one of following independent testing and inspecting agency as evidenced by design designation included in their associated approval manual:

1. UL - "Fire Resistance Directory", Category BXUV.
2. GA 600 - "Fire Resistance Design Manual".
3. Other agency acceptable to authorities having jurisdiction.

D. Smoke Resistance Rated Assembly Characteristics: Provide materials and construction identical to those tested according to indicated fire resistance rated assemblies by independent testing and inspecting agency acceptable to authorities having jurisdiction.

E. Sound (STC) Resistance Rated Assembly Characteristics: Provide materials and construction identical to those tested according to ASTM E 90 and classified according to ASTM E 413 by independent and testing agency acceptable to authorities having jurisdiction.

1.7 PRE-INSTALLATION CONFERENCE

A. Pre-Installation Conference: Before Work begins, conduct conference at Project site.

1.8 DELIVERY, STORAGE, AND HANDLING

A. Store materials inside under cover and keep them dry and protected against weather, condensation, direct sunlight, construction traffic, and other potential causes of damage. Stack panels flat and supported on risers on a flat platform to prevent sagging.

1.9 PROJECT CONDITIONS

A. Environmental Conditions: Comply with ASTM C 840 requirements or respective gypsum board manufacturer's written recommendations, whichever are more stringent.

B. Field Measurements: Where products and systems are indicated to fit walls and other construction, verify dimensions by field measurements before fabrication.

1.10 COORDINATION

A. Coordinate installation of products and systems with interfacing and adjoining construction to provide a successful installation without failure.

PART 2 - PRODUCTS

2.1 MANUFACTURERS AND PRODUCTS

A. Acceptable Manufacturers and Products: Subject to compliance with requirements of Contract Documents as judged by the Architect, provide product by one of manufacturers listed. If not listed, submit as substitution according to the Conditions of the Contract and Division 01 Section "Substitution Procedures".

B. Basis of Design (Product Standard): Contract Documents are based on products and systems specified to establish a standard of quality. Other manufacturers offering products having equivalent characteristics may be considered, provided deviations are minor and comply with requirements of Contract Documents as judged by the Architect.

2.2 MATERIALS, GENERAL

A. Single Source Responsibility: Furnish each type of product from single manufacturer. Provide secondary materials only as recommended by manufacturer of primary materials.

2.3 PERFORMANCE REQUIREMENTS

A. General Performance: Provide products and systems to withstand loads within limits of allowable working stresses of the materials involved under conditions indicated and without permanent deformation or failure of materials.

B. Design Loads: Provide products and systems to withstand design loads including but not limited to gravity, wind, seismic, and erection design loads established by authorities having jurisdiction, applicable local building codes, and as indicated.

1. Structural Movement: Provide products and systems to withstand movements of structure including, but not limited to, drift, twist, column shortening, long-term creep and deflection from uniformly distributed and concentrated live loads. Contractor shall obtain required design data and identify movements accommodated on submittal drawings.

    a. Accommodate plus or minus 3/8 in (10 mm) differential vertical deflection of floors.

C. Dimensional Tolerances: Provide products and systems to accommodate dimensional tolerances of framing members and adjacent construction.

2.4 SUSPENDED GRID SYSTEM FOR INTERIOR CEILINGS

A. Suspension System:

1. Material Quality Standard: ASTM C 645, heavy-duty rating.

2. Description: Manufacturer's standard direct-hung suspended grid system composed of main beams and cross furring .members that interlock to form a modular supporting network for application of gypsum board.
3. Protective Coating - Standard Applications: ASTM A 653/A 653M, not less than G40 (Z120), hot-dip galvanized coating, unless otherwise indicated.
4. Main Beams: Inverted T-shaped profile of single or double mounting flange; minimum 1-1/2 in (38 mm) profile height with top bulb and minimum 1-3/8 in (35 mm) wide knurled mounting flange; factory punched for hanger wire, and to receive cross furring members.
5. Cross Furring Members:

    a. Tees: Inverted T-shaped profile of single or double mounting flange; 1-1/2 in (38 mm) profile height with top bulb and minimum 1-3/8 in (35 mm) wide knurled mounting flange; with ends formed for positive interlocking with main beam.
    b. Channels: Inverted hat shaped profile; minimum 7/8 in (21 mm) profile height and minimum 1-3/8 in (35 mm) wide knurled mounting flange; with ends formed for positive interlocking with main beam.

6. Wall Angle: Angle shaped profile with each leg not less than 1-1/4 in (32 mm).
7. Curved Members: Where curved ceilings are indicated, members shall be rolled by manufacturer; field fabricated curved members not permitted.
8. Accessories: Specifically designed as an integral part of suspended grid system.
9. Manufacturers and Products:

    a. Armstrong World Industries Inc.; Drywall Grid System.
    b. Chicago Metallic Corporation; 650-C/670-C Fire-Rated Drywall Grid System.
    c. United States Gypsum Company (USG Interiors, Inc.); Drywall Suspension System.

B. Hanger Attachments to Concrete:

1. Anchors: Fabricated from corrosion-resistant materials with holes or loops for attaching hanger wires and capable of sustaining, without failure, a load equal to 5 times that imposed by construction as determined by testing according to ASTM E 488 by a qualified independent testing agency.

    a. Cast-in-place anchor, designed for attachment to concrete.
    b. Post-installed chemical anchor.
    c. Post-installed expansion anchor.

2. Powder-Actuated Fasteners: Suitable for application indicated, ANSI A 10.3; low velocity, powder-actuated fasteners; drive pins and clip angles fabricated from corrosion-resistant materials, with clips or other devices for attaching hangers of type indicated, and capable of sustaining, without failure, an ultimate load capacity not less than 10 times that imposed by construction as determined by testing according to ASTM E 1190 by a qualified independent testing agency.
3. Manufacturers:

    a. Construction Materials, Inc.
    b. Heckman Building Products, Inc.
    c. Hilti Corp.
    d. ITW Ramset/Red Head.
    e. Powers Fasteners.
    f. Simpson Strong Tie Anchor Systems.

4. For post-tensioned concrete, anchors shall not exceed 1 in (25 mm) embedment. Obtain Structural Engineer's written approval for all proposed anchors in post-tensioned concrete prior to installation.

C. Wire:

1. Material Quality Standard: ASTM A 641 / A 641M, Class 1, zinc-coated, soft annealed, mild steel wire.
2. Tie Wire Minimum Size: Single 0.0625 in (16 gage) (1.6 mm) diameter strand, or double 0.0475 in (18 gage) (1.2 mm) diameter strands. Preformed furring channel clips are acceptable.
3. Hanger Wire Minimum Size: 0.1620 in (8 gage) (4.12 mm) diameter.

D. Rod Hangers: ASTM A 1008 / A 1008M, 7/32 in (0.56 mm) diameter mild carbon steel rod, with primer painted finish.

E. Flat Hangers: ASTM A 1008 / A 1008M, 1 in by 3/16 in (25 mm by 5 mm) by length indicated or required, with primer painted finish.

F. Angle Hangers: ASTM A 36 / A 36M, rolled steel angle, 2 in by 2 in (50 mm by 50 mm), with primer painted finish.

2.5 METAL FRAMING COMPONENTS

A. Project Framing Analysis: Analyze each framing condition for design loads indicated in performance requirements.

1. Provide framing products in sizes and thicknesses required to meet or exceed the criteria based on project loads, spans and in-service conditions.

B. Material Quality Standard: Provide components of sizes indicated but not less than that required to comply with ASTM C 754 for conditions indicated.

1. Sheet Steel: ASTM C 645 for metal.
2. Protective Coating - Standard Applications: ASTM A 653/A 653M, not less than G40 (Z120), hot-dip galvanized coating, unless otherwise indicated.
3. Protective Coating - High Moisture / Humidity Applications: ASTM A 653 / A 653M, G90 (Z275) hot-dip galvanized coating at high moisture areas such as Kitchens, Saunas, Steam Rooms, and Pool Enclosures.

C. Metal Studs and Floor Track (Runners):

1. Standard Metal Framing Components for Typical Partitions:

a. Stud Description: C-shaped members formed from galvanized sheet steel with 1 1/4 in (32 mm) flange edges bent back 90 degrees and doubled over to form 13/64 in (5 mm) wide minimum return lip; of web depth indicated on Drawings and uncoated base metal thickness indicated in “Metal Framing Schedule” at end of this Section; with web punchouts.

1) Alternative Jamb Stud Members - Contractor's Option: "Heavy Duty" or "King" studs; C-shaped members formed from galvanized sheet steel with 3 in (75 mm) flange width; of web depth indicated on Drawings and uncoated base metal thickness indicated in "Metal Framing Schedule" at end of this Section.

b. Track (Runner) Description: U-shaped members formed from galvanized sheet steel with depth compatible with studs and flange dimension indicated to hold studs by friction; of same web size and uncoated base metal thickness as studs.

1) Floor Track (Runner): 1-1/4in (32 mm).
2) Top of Wall Track (Runner): 3 in (75 mm).

2. Metal Framing for Shaftwall Partitions:

a. Stud Description: C-H, double E, C-T, or I-shaped members formed from galvanized sheet steel; of web depth indicated on Drawings and uncoated base metal thickness indicated in "Metal Framing Schedule" at end of this Section; with web punchouts.
b. Track (Runner) and Jamb Description: J-shaped track or jamb members formed from galvanized sheet steel with depth compatible with studs and flange dimension indicated to hold studs by friction; of same web size and uncoated base metal thickness as studs.

3. Optional Equivalent Products - Deformed Metal Studs and Tracks (Runners):

a. Evaluation Criteria: Product test reports and certifications from independent testing agency indicating products comply with requirements and are acceptable to authorities having jurisdiction.
b. Material Quality Standard: ASTM A 1003 / A 1003M sheet steel with galvanized coating.
c. Stud Description: C-shaped members formed from deformed surface galvanized sheet steel with 1-1/4 in (32 mm) flange edges bent back 90 degrees and bent again to form 3/16 in (5 mm) wide minimum return lip; of web depth indicated on Drawings and uncoated base metal thickness indicated in "Metal Framing Schedule" at end of this Section; with web punchouts.
d. Track (Runner) Description: U-shaped members formed from deformed surface galvanized sheet steel with depth compatible with studs and flange dimension indicated to hold studs by friction; of same web size and uncoated base metal thickness as studs.
e. Manufacturer and Product: ClarkDietrich Building Systems; ProSTUD.

D. Flat Straps and Back-Up Plates: Galvanized sheet steel for blocking and bracing in length and width indicated, of same uncoated base metal thickness as adjacent metal studs.

E. Bridging:

1. Channel: U-shaped members formed from galvanized sheet steel not less than 0.0566 in (16 gage) (1.44 mm) minimum uncoated base metal thickness, with 1/2 in (12 mm) flanges and depth fitting stud punchouts.
2. Clip Angle: 1-1/2 in by 1-1/2 in (38 mm by 38 mm) L-shaped members formed from galvanized sheet steel not less than 0.0713 in (14 gage) (1.81 mm) uncoated base metal thickness.

F. Rigid Furring Channels: Hat-shaped members formed from galvanized sheet steel not less than 0.0312 in (20 gage) (0.78 mm) minimum uncoated base metal thickness; 7/8 in (21 mm) depth and minimum 1-3/8 in (35 mm) wide knurled mounting flange.

G. Resilient Furring Channels: 1/2 in (12 mm) deep members formed from galvanized sheet steel not less than 0.0283 in (22 gage) (0.72 mm) minimum bare-metal thickness, designed to reduce sound transmission.

1. Configuration: Asymmetrical or hat shaped.

H. Framing Accessories for Spanning Multiple Floors: Framing manufacturers standard connectors, bracings, brackets, clips, gussets, and other framing devices as required by conditions, formed from galvanized sheet steel complying with requirements of main support system.

I. Z-Shaped Furring: Members formed from galvanized sheet steel not less than 0.0283 in (22 gage) (0.72 mm) minimum bare-metal thickness, with slotted or non-slotted web, face flange of 1-1/4 in (32 mm), wall attachment flange of 7/8 in (21 mm); depth required to fit insulation thickness indicated.

J. Manufacturers:

1. Building Products Division of Consolidated Fabricators Corp.
2. California Expanded Metal Products Co. (CEMCO).
3. ClarkDietrich Building Systems
4. Marino Ware; Division of Ware Industries.
5. MBA Metal Framing.
6. Scafco Corp.

K. Heavy-Duty Framing Systems (HDS) Headers and Jambs at Lead Lined Doors: Manufacturer’’’’s proprietary shape used to form header beams and jambs, columns or posts, of web depths indicated, unpunched, with stiffened flanges and as follows:

1. Basis-of-Design Product: Subject to compliance with requirements, provide ClarkDietrich Building Systems; Heavy Duty Studs - HDS and Header Bracket —— HDSC and accessories as required for a complete installation.

a. Minimum Base-Steel Thickness: 0.0538 inch (1.37 mm) or as indicated on drawings.
b. Web and Flange Widths, Type HDS: 3-5/8 by 3 by 1-1/16 by 3/4 inch (92.1 by 76.2 by 27.0 by 19.1 mm) or 6 by 3 by 2-1/4 by 3/4 inch (152 by 76.2 by 57.2 by 19.1 mm); as indicated on drawings.
c. Web and Flange Widths, Type HDSC: 3-1/2 by 3-1/16 by 2 inches (88.9 by 77.8 by 50.8 mm) or 5-7/8 by 3-1/16 by 2 inches (149 by 77.8 by 50.8 mm); as indicated on drawings.

2. Slip-Type Head Joints: Clips designed for use in head-of-wall deflection conditions that provide a positive attachment of studs to runners while allowing for vertical movement.

a. Basis of Design: ClarkDietrich Building Systems; Fast Top Clip FTC3 or FTC5.

3. Anchor Clips: Pre-punched, galvanized anchor clips designed for use in floor n conditions that provide a positive attachment of studs to runners while allowing for horizontal, torsional and vertical (uplift) loads.

    a. Basis of Design: ClarkDietrich Building Systems; EasyClip T-Series, T685 or T683.

2.6 PRE-ENGINEERED METAL FRAMING COMPONENTS

A. Deflection and Firestop Track (Runner):

1. Description: Proprietary track (runner) formed from galvanized sheet steel manufactured to accommodate movement of building structure without transferring stress to partition (to prevent cracking of gypsum board resulting from deflection of building structure above) while maintaining continuity of fire resistance rated assembly indicated; in thickness not less than indicated for studs and in width to accommodate depth of studs.
2. Manufacturers:

    a. Metal Stud Framing Manufacturer.
    b. Fire Trak Corp.
    c. The Steel Network.

B. Flexible Track (Runner):

1. Description: Proprietary track (runner) formed from galvanized sheet steel manufactured to be flexible and adjustable to fit design requirements; in thickness not less than indicated for studs and in width to accommodate depth of studs.
2. Manufacturers:

    a. Metal Stud Framing Manufacturer.
    b. Accu-Arc Curved Wall Products.
    c. Flex-Ability Concepts.
    d. Radius Track Corp.

C. Headers:

1. Description: Proprietary header assembly formed from galvanized sheet steel manufactured to bear partition load above openings without transferring stress to partition (to prevent cracking of gypsum board); in thickness not less than indicated for studs and in width to accommodate depth of studs.
2. Manufacturers:

    a. Metal Stud Framing Manufacturer.
    b. Brady Construction Innovations, Inc.

2.7 GYPSUM BOARD PRODUCTS

A. Sizes: Maximum lengths and widths available that will minimize short edge-to-short edge butt joints and to correspond to support system indicated.

B. Typical Paper-Faced Gypsum Board Products:

1. Paper-Faced Type X Gypsum Board:

a. Material Quality Standard: ASTM C 1396 / C 1396M, Type X.
b. Description: Noncombustible fire resistant gypsum core with paper surfacing on face, back, and long edges; tapered long edges; 5/8 in (15 mm) thick.
c. Manufacturers and Products:

1) American Gypsum Company; FireBloc Type X Gypsum Board.
2) CertainTeed Corporation; Type X Gypsum Board.
3) Georgia-Pacific Gypsum LLC; ToughRock Fireguard Gypsum Board.
4) National Gypsum Company; Gold Bond Fire-Shield Gypsum board.
5) United States Gypsum Company (USG); Sheetrock Firecode Core.

2. Sustainable Paper-Faced Type X Gypsum Board: At Contractor's option, provide sustainable paper-faced Type X gypsum board or typical paper-faced Type X gypsum board.

a. Material Quality Standard: ASTM C 1396 / C 1396M, Type X.
b. Description: Noncombustible fire resistant gypsum core with paper surfacing on face, back, and long edges; tapered long edges; 5/8 in (15 mm) thick. UL Type Designation "ULIX".

1) ISO 14040 Environmental Management, Life Cycle Assessment, Principles and Framework:

a) Carbon emissions per Gypsum Association; Industry Standard Type III EPD for North American Type X wallboard with a manufacturing Global Warming Potential of 317.4 kg CO2-eq./1000MSF.
b) Water reduction per Gypsum Association; Industry Standard Type III EPD for North American Type X wallboard having net use of fresh water value of 1.329 m3/1000 ft2.
c) Primary Energy from non-renewable resources per Gypsum Association; Industry Standard Type III EPD for North American Type X wallboard have a value of 5,291 MJ/1000 ft2.

c. Basis of Design:

1) United States Gypsum Company, LLC, USG Sheetrock Brand EcoSmart Panels Firecode X.

3. Paper-Faced Type C Gypsum Board:

a. Material Quality Standard: ASTM C 1396 / C 1396M, Type X.
b. Description: Noncombustible fire resistant gypsum core, with additives to enhance fire resistance, with paper surfacing on face, back, and long edges; tapered long edges; 5/8 in (15 mm) thick.
c. Manufacturers and Products:

1) American Gypsum Company; FireBloc Type C Gypsum Board.
2) CertainTeed Corporation; Type C Gypsum Board.
3) Georgia-Pacific Gypsum LLC; ToughRock Fireguard C Gypsum Board.
4) National Gypsum Company; Gold Bond Fire-Shield C Gypsum board.
5) United States Gypsum Company (USG); Sheetrock Firecode C Core Gypsum Panels.

4. Paper-Faced Flexible Gypsum Board at Curved Surfaces:

    a. Material Quality Standard: ASTM C 1396 / C 1396M.
    b. Description: Gypsum core with paper surfacing on face, back and long edges; manufactured to bend to fit tight radii and be more flexible than typical panels without wetting; tapered long edges; 1/4 in (6 mm) thick.
    c. Manufacturers and Products:

        1) American Gypsum Company; 1/4 ClasicRoc Gypsum Board.
        2) CertainTeed Corporation; 1/4”””” Flex Gypsum Board.
        3) Georgia-Pacific Gypsum LLC; ToughRock FlexRoc Gypsum Board.
        4) National Gypsum Company; Gold Bond High Flex Brand Gypsum board.
        5) United States Gypsum Company (USG); Sheetrock 1/4”””””””””””””” Flexible Gypsum Panels.

C. Moisture-Resistant Gypsum Board Products:

1. Moisture-Resistant Paper-Faced Gypsum Board:

    a. Material Quality Standard: ASTM C 1396 / C 1396M, Type X.
    b. Description: Enhanced moisture-resistant, noncombustible gypsum core, with moisture-resistant paper surfacing on face, back and long edges; tapered long edges; score of 10 according to ASTM D 3273; 5/8 in (15 mm) thick.
    c. Manufacturers and Products:

        1) American Gypsum Company; M-Bloc Mold and Moisture Resistant Type X Gypsum Board.
        2) CertainTeed Corporation; M2Tech Moisture and Mold Resistant Type X Gypsum Board.
        3) National Gypsum Company; Gold Bond XP Gypsum Board.
        4) United States Gypsum Company (USG); Sheetrock Mold Tough Firecode Gypsum Board.

2. Moisture-Resistant Paperless Glass-Mat Gypsum Board:

    a. Material Quality Standard: ASTM C 1658 / C 1658M.
    b. Description: Enhanced moisture-resistant, noncombustible gypsum core with inorganic, embedded fiberglass mat on both faces; square edges; score or 10 according to ASTM D 3273; 5/8 in (15 mm) thick.
    c. Manufacturers and Products:

        1) Georgia-Pacific Gypsum LLC; DensArmor Plus Fireguard Interior Guard.
        2) National Gypsum Company; eXP Interior Extreme Gypsum Panels.

3. Moisture-Resistant Paper-Faced Shaft-Liner Gypsum Board:

    a. Material Quality Standard: ASTM C 1396/C 1396M, Type X.
    b. Description: Enhanced moisture-resistant, noncombustible gypsum core with moisture-resistant paper surfacing on face, back and long edges; tapered long edges; score of 10 according to ASTM D 3273; 1 in (25 mm) thick.
    c. Manufacturers and Products:

        1) American Gypsum Company; M-Bloc Shaft Liner Panels.

2) CertainTeed Corporation; M2Tech Moisture & Mold Resistant Shaftliner.
3) National Gypsum Company; Gold Bond 1" Fire-Shield Shaftliner XP.
4) USG Corp.; SHEETROCK Mold Tough Gypsum Liner Panels.

4. Moisture-Resistant Paperless Glass-Mat Shaft-Liner Gypsum Board:

a. Material Quality Standard: ASTM C 1396 / C 1396M.
b. Description: Enhanced moisture-resistant, noncombustible gypsum core with inorganic, embedded fiberglass mat on both faces, double bevel long edges; score of 10 according to ASTM D 3273; 1 in (25 mm) thick.
c. Manufacturers and Products:

1) American Gypsum Company; M-Glass Shaft Liner Panels.
2) CertainTeed Corporaton; GlasRoc Shaftliner Type X.
3) Georgia-Pacific Gypsum LLC; DensGlass Shaftliner.
4) National Gypsum Company; eXP Extended Exposure Shaftliner.
5) USG Corp.; SHEETROCK Glass-Mat Liner Panels

5. Moisture-Resistant Coated Glass-Mat Gypsum Board Products:

a. Material Quality Standard: ASTM C 1178 / C 1178M.
b. Description: Enhanced moisture-resistant, noncombustible, gypsum core with inorganic, embedded fiberglass mat on both sides; outside face coated with heat-cured copolymer water-resistant coating; square edges; score or 10 according to ASTM D 3273; 5/8 in (15 mm) thick.
c. Manufacturers and Products:

1) CertainTeed Corporation; Diamondback Tile Backer.
2) Georgia-Pacific Gypsum LLC; DensShield Tile Backer.
3) National Gypsum Company; eXP Tile Backer.

6. Moisture-Resistant, Abuse-Resistant Gypsum Board Products:

a. Material Quality Standard: ASTM C 1629 (C 1629M), Type X, and as follows:

1) Soft Body Impact Test: ASTM E 695, Classification Level 2.
2) Hard Body Impact Test: Annex A1, Classification Level 1.
3) Mold Resistance: ASTM D 3273, score of 10 as rated according to ASTM D 3274.

b. Paper-Faced Products: Specially formulated, noncombustible, gypsum core with heavy liner paper on back and smooth, heavy abrasive-resistant face paper on face and long edges; manufactured to produce greater resistance to surface indentation and through-penetration than typical gypsum panels; tapered long edges; 5/8 in (15 mm) thick.

1) Manufacturers and Products:

a) CertainTeed Corporation; Air Renew Extreme Abuse.
b) National Gypsum Company: Gold Bond Hi-Abuse XP Gypsum Board.

c. Paperless Products: Specially formulated, noncombustible, gypsum core with coated, fiberglass mat on both faces; manufactured to produce greater resistance to surface indentation and through-penetration than typical gypsum panels; tapered long edges; 5/8 in (15 mm) thick.

1) Manufacturers and Products:

a) National Gypsum Company; Gold Bond eXP Interior Extreme AR Gypsum Panel.
b) USG Corporation; Fiberock Interior Panel, Abuse Resistant.

7. Moisture-Resistant, Impact-Resistant Gypsum Board Products:

a. Material Quality Standard: ASTM C 1629 (C 1629M), Type X, and as follows:

1) Soft Body Impact Test: ASTM E 695, Classification Level 3.
2) Mold Resistance: ASTM D 3273, score of 10 as rated according to ASTM D 3274.

b. Paper-Faced Products: Specially formulated, noncombustible, gypsum core with heavy liner paper on back and smooth, heavy abrasive-resistant face paper on face and long edges; manufactured to produce greater resistance to surface indentation and through-penetration than typical gypsum panels; tapered long edges; 5/8 in (15 mm) thick.

1) Manufacturers and Products:

a) CertainTeed Corporation; Air Renew Extreme Impact.
b) National Gypsum Company: Gold Bond Hi-Impact XP Gypsum Board.

c. Paperless Products: Specially formulated, noncombustible, gypsum core with coated, fiberglass mat on both faces; manufactured to produce greater resistance to surface indentation and through-penetration than typical gypsum panels; tapered long edges; 5/8 in (15 mm) thick.

1) Manufacturers and Products:

a) Georgia-Pacific Gypsum LLC; Dens Armor Plus Impact-Resistant Interior Panels.
b) National Gypsum Company; Gold Bond eXP Interior Extreme IR Gypsum Panel.
c) USG Corporation; Fiberock Panels, VHI Abuse-Resistant.

2.8 TRIM ACCESSORIES

A. Typical Drywall Trim Accessories:

1. Material Quality Standard: ASTM C 1047.
2. Description: Trim profile fabricated of galvanized steel sheet; of size suitable for gypsum board thickness; with recessed, perforated flange formed to receive joint compound.
3. Trim Products:

a. Cornerbead:

1) Purpose: For protecting outside (external) corners.
2) Basis of Design: United States Gypsum Company (USG); Dur-A-Bead Corner Bead, 103.

b. Optional Equivalent Products – Structural Laminate Cornerbead System: At Contractor's option, provide high strength tapered co-polymer core cornerbead with tight fibered paperboard facing and joint tape paper backing.

1) Purpose: For protecting outside (external) corners.
2) Basis of Design: Structus Building Technologies; No-Coat Structural Laminate Drywall Corner System.

c. LC-Bead (J-Bead):

1) Purpose: For protecting exposed edges of gypsum board where back flange can be used.
2) Basis of Design: United States Gypsum Company (USG); J-Trim, 200-A.

d. L-Bead:

1) Purpose: For protecting exposed edges of gypsum board where back flange cannot be used.
2) Basis of Design: United States Gypsum Company (USG); L-Trim, 200-B.

e. J-Stop:

1) Purpose: For protecting edges of gypsum board that does not require finishing.
2) Basis of Design: United States Gypsum Company (USG); J-Stop, 402.

f. Control Joint:

1) Description: One-piece trim formed with V-shaped slot, with removable strip covering slot opening.
2) Purpose: For conditions requiring expansion and contraction stresses of large areas of gypsum board to be relieved.
3) Basis of Design: United States Gypsum Company (USG); Control Joint, 093.

g. Other Trim or Special Shapes: Products as required by condition.

4. Manufacturers:

a. Dietrich Industries, Inc.; Unimast.
b. Fry Reglet Architectural Metals.
c. Marino Ware; Division of Ware Industries.
d. Niles Building Products Co.
e. Superior Metal Trim; Division of Delta Star, Inc.
f. United States Gypsum Company (USG).

B. Plastic Drywall Trim Accessories:

1. Description: Trim profile fabricated of high-impact PVC, of size suitable for gypsum board thickness; with recessed, perforated flange formed to receive joint compound.
2. Trim Products Profiles: As listed above in "Typical Drywall Trim Accessories".
3. Manufacturers:

    a. Alabama Metal Industries Corporation; a Gibraltar Industries Company.
    b. Phillips Manufacturing Co.
    c. Plastic Components, Inc.
    d. Trim Tex Drywall Products.
    e. Vinyl Corp., a division of ClarkDietrich Building Systems.

C. Accent Trim Accessories:

1. Description: Extruded aluminum accessories of profiles and dimensions indicated of alloy and temper with not less than strength and durability properties of ASTM B 221, alloy 6063-T5.
2. Basis of Design:

    a. Aluminum Trim Accessory Type:

        1) Manufacturer: Fry Reglet
        2) Product: F Reveal Molding
        3) Reveal Dimension: ¾-inch.
        4) Finish:

3. Manufacturers:

    a. Fry Reglet Architectural Metals.
    b. Gordon, Inc.
    c. Pittcon Industries.

D. Wall to Aluminum Window Trim Accessories (Perpendicular to Exterior Windows):

1. Sound Barrier Partition/Mullion Trim Cap:

    a. Description: Pre-assembled, spring loaded, extruded aluminum partition closures fabricated from 6063-T5 temper, tensile strength 31 KSI (ASTM B 221, ASTM B 221 M). STC rated with optional mineral wool batts for additional sound attenuation (approx. STC 57). Seal to mullion and wall or glass and wall with foam gasket, adhesive both sides.
    b. Manufacturers and Products:

        1) Basis of Design: "Mull-it-Over", 57 Wide Sound Barrier Mullion Trim Cap.
        2) STC: 57.
        3) Finish: As selected by Architect to match mullion finish.

2.9 FASTENERS

A. Limitations: Nails and staples are not permitted.

B. Fasteners for Attaching Metal Framing to Concrete Structure:

1. Anchors: Fabricated from corrosion-resistant materials with holes or loops for attaching hanger wires and capable of sustaining, without failure, a load equal to 5 times that imposed by construction as determined by testing according to ASTM E 488 by a qualified independent testing agency.

    a. Cast-in-place anchor, designed for attachment to concrete.
    b. Post-installed chemical anchor.
    c. Post-installed expansion anchor.

2. Powder-Actuated Fasteners: Suitable for application indicated, ANSI A 10.3; low velocity, powder-actuated fasteners; drive pins and clip angles fabricated from corrosion-resistant materials, with clips or other devices for attaching hangers of type indicated, and capable of sustaining, without failure, an ultimate load capacity not less than 10 times that imposed by construction as determined by testing according to ASTM E 1190 by a qualified independent testing agency.
3. Manufacturers:

    a. Construction Materials, Inc.
    b. Heckman Building Products, Inc.
    c. Hilti Corp.
    d. ITW Ramset/Red Head.
    e. Powers Fasteners.
    f. Simpson Strong Tie Anchor Systems.

4. For post-tensioned concrete, anchors shall not exceed 1 in (25 mm) embedment. Obtain Structural Engineer's written approval for all proposed anchors in post-tensioned concrete prior to installation.

C. Metal Framing Screws: Screw fasteners of type, material, size, corrosion resistance, holding power, and other properties required to fasten metal framing and furring members securely to substrates involved; complying with recommendations of gypsum board manufacturers for applications indicated.

D. Gypsum Board Screws:

1. Material Quality Standards:

    a. Metal Framing Members less than 0.03 in (0.75 mm) Thick: ASTM C 1002, Type S.
    b. Metal Framing Members from 0.033 in to 0.112 in (0.79 mm to 2.9 mm) Thick: ASTM C 954, Type S-12.

2. Product Description - Standard Applications: Bugle head, self-drilling, self-tapping, steel screws with Phillips-head recess of size, holding power, and other properties recommended by respective gypsum board manufacturer; minimum 1 in (25 mm) long; with corrosion-protective coating having a salt-spray resistance of more than 800 hours according to ASTM B 117.
3. Product Description - High Moisture / Humidity Applications: Bugle head, self-drilling, self-tapping, stainless steel screws with Phillips-head recess of size, holding power, and other properties recommended by respective gypsum board manufacturer; for use at high moisture areas such as Kitchens, Showers and Tub Enclosures, Saunas, Steam Rooms, and Pool Enclosures.

E. Miscellaneous Fasteners: For conditions not indicated, fasteners shall be type, finish, size, and holding power recommended by respective gypsum board manufacturer and conditions.

2.10 JOINT TREATMENT MATERIALS

A. Material Quality Standard: ASTM C 475 / C 475M.

B. Joint Tape:

1. Paper Tape: Nominal 2 in (50 mm) wide cross-fibered paper tape with finish suitable for bonding, creased in center for easy folding, and compatible with joint compound.
2. Mesh Tape: Nominal 2 in (50 mm) wide self-adhering 10-by-10 fiberglass mesh tape.

C. Joint Compound:

1. Setting-Type: Job-mixed powder for mixing with water, chemical-hardening compound; includes taping types.
2. Drying-Type: Ready-mixed or job-mixed powder for mixing with water, air-drying, vinyl based compounds; includes taping, topping, and all-purpose types.

2.11 INTERIOR SURFACING COMPOUNDS

A. Level 5 Primer and Surfacer: Latex based compound containing polyvinyl acetate (PVA) polymer that can be spray or roller applied to change a Level 4 finish to a Level 5 finish.

1. Manufacturers and Products:

a. CertainTeed Corporation; ProRoc Level V Wall and Ceiling Primer/Surfacer.
b. United States Gypsum Company (USG); Sheetrock Brand Tuff-Hide Primer-Surfacer.

B. Concrete Surfacing Compound: Vinyl-based, factory-formulated product applied in two or more coats as necessary for filling and smoothing to provide monolithic concrete surfaces to match Gypsum Board Level 4 finish.

1. Basis of Design: United States Gypsum Company (USG); Cover Coat Brand Compound.

2.12 RELATED MATERIALS

A. General: Provide auxiliary materials for gypsum board construction that comply with referenced quality standards and recommendations of gypsum board manufacturer.

B. Firestopping Products at Penetrations: As specified in Division 07 Section "Penetration Firestopping".

C. Fiberglass Sound Attenuation Blankets:

1. Material Quality Standard: ASTM C 665, Type I.
2. Description: Unfaced blankets produced by bonding inorganic glass fibers with a thermosetting binder.
3. Description: Unfaced blankets produced by bonding inorganic glass fibers with a thermosetting binder; free of formaldehyde.
4. Surface Burning Characteristics: According to ASTM E 84/NFPA 255/UL 723:

a. Flame Spread: Class A - no greater than 25.
b. Smoke Developed: No greater than 50.

5. Thickness: Not less than 2-1/2 in (62 mm), unless otherwise indicated.
6. Manufacturers and Products:

a. CertainTeed Corporation; CertaPro AcoustaTherm Batts.
b. Johns Manville Building Insulation Div.; Sound Control Batts.
c. Knauf Fiber Glass; QuietTherm.
d. Owens Corning; Sound Attenuation Batts.

7. Basis of Design: Johns Manville; Sound Control Batts, Formaldehyde Free.

D. Mineral Wool Sound Attenuation Blankets:

1. Material Quality Standard: ASTM C 665, Type I.
2. Description: Unfaced mineral-fiber blanket insulation produced by combining mineral fibers of rock or slag with thermosetting resins.
3. Surface Burning Characteristics: According to ASTM E 84/NFPA 255/UL 723:

a. Flame Spread: Class A - no greater than 25.
b. Smoke Developed: No greater than 50.

4. Thickness: Not less than 3 in (75 mm), unless otherwise indicated.
5. Density: Not less than nominal 2.5 pounds per cubic foot.
6. Manufacturers:

a. Fibrex Insulations, Inc.
b. Rock Wool Manufacturing Co.
c. Roxul.
d. Thermafiber LLC.

E. Acoustical Sealant for Non-Fire Resistance Rated Joints:

1. Description: Manufacturer's standard nonsag, paintable, nonstaining sealant complying with ASTM C 834 or ASTM C 920. Product effectively reduces airborne sound transmission through perimeter joints and openings in building construction as demonstrated by testing representative assemblies per ASTM E 90 or other acceptable test method.

a. Preconstruction Compatibility Testing: Test sealant for compatibility with copper substrates. Testing will not be required if data submitted on previous testing of current sealant products matches those submitted.
b. Do not use acrylic, neoprene, and nitrile based sealants that are not recommended for use with copper substrates.

F. Fire-Resistance Rated and Acoustical Putty Pads:

1. Product Quality Standard: UL 263 (ASTM E 119).
2. Description: Fire-rated, non-hardening, moldable, intumescent compound formed into sheets designed to seal penetrations, construction gaps, and around electrical boxes against spread of fire, smoke, and toxic gases.
3. Manufacturers and Products:

a. Grace Construction Products; Flamesafe FSP 1077 Putty Pads.
b. Hilti; CP 617 Intumescent Acoustic Putty Pads.
c. Hilti; CFS-P PA.
d. Specified Technologies, Inc; Series SSP Putty Pads.
e. Tremco; TREMstop Electrical Box Insert.
f. 3M; Fire Barrier Moldable Putty+Pads.

G. One-Piece Barrier Box:

1. Description: Rigid reinforced polyethylene box designed to fit around electrical boxes to prevent leaks of air and vapor.
2. Basis of Design: Lessco Air-Vapor Barrier Box.

H. Fire Resistive Sealants: Intumescent elastomeric sealant as specified in Division 07 Section "Fire-Resistive Joint Firestopping".

I. Sealants: Sealant as specified in Division 07 Section "Joint Sealants".

J. Isolation Strips: Adhesive-backed, closed cell neoprene or vinyl foam strips that allow fastener penetration with foam displacement, size as indicated, compressed 50 percent.

PART 3 - EXECUTION

3.1 EXAMINATION

A. Acceptance of Surfaces and Conditions: Examine substrates to receive products and systems and associated work for compliance with requirements and other conditions affecting performance. Proceed only when unsatisfactory conditions have been corrected in a manner complying with Contract Documents. Starting work within a particular area will be construed as acceptance of surface conditions.

3.2 INSTALLATION, GENERAL

A. Installation Quality Standards: In addition to standards listed elsewhere, perform Work according to following, unless otherwise specified:

1. Respective Manufacturer's written installation instructions.
2. Accepted submittals.
3. Contract Documents.
4. Gypsum Association GA 216.
5. United States Gypsum Company (USG); Gypsum Construction Handbook, if no other installation quality standard applies to condition.

B. Control of Corrosion: Prevent galvanic action and other forms of corrosion by isolating metals and other materials from direct contact with incompatible materials.

3.3 PREPARATION

A. General: Comply with manufacturer's instructions, recommendations and specifications for cleaning and surface preparation. Surfaces shall have no defects, contaminants, or errors which would result in poor or potentially defective installation or would cause latent defects in Work.

B. Suspended Gypsum Ceilings: Coordinate installation of ceiling suspension systems with installation of overhead structure to ensure that inserts and other provisions for anchorages to building structure have been installed to receive hanger wires at spacing required to support ceilings and that hangers will develop their full strength.

C. Coordination with Sprayed Fire-Resistance Materials:

1. Pre-Application Coordination: Before sprayed fire-resistance materials are applied, attach Z shaped clips and offset mounting plates to structural steel members with powder actuated fasteners, leaving portion of flange exposed outside of sprayed fire-resistive materials to attach head of wall track for gypsum board assembly.
2. Post-Application Coordination: After sprayed fire-resistive materials are applied, remove materials only to extent necessary for installation of gypsum board assemblies, attach Z shaped clips and offset mounting plates to structural steel members with powder actuated fasteners, leaving portion of flange exposed outside of sprayed fire-resistive materials to attach head of wall track for gypsum board assembly, and patch with fire-resistive material specified in Division 07 Section "Cementitious Fireproofing" that is required to obtain fire-resistance rating indicated.

3.4 INSTALLATION OF GYPSUM BOARD ASSEMBLIES

A. Comply with ASTM C 840.

B. Resistance Rated Partitions: Construct fire resistance rated, smoke resistance rated, and sound resistance rated partitions according to respective assembly test reports. Ensure every material used within an assembly shall comply with manufacturers listed and product qualities indicated in respective assembly test report.

C. Penetrations and Openings: Construct within gypsum board assemblies work as required to properly form penetration or opening to receive firestopping materials specified in following Sections:

1. Division 07 Section "Penetration Firestopping".
2. Division 07 Section "Fire-Resistive Joint Firestopping".

D. Control Joints: Install control joints at locations indicated on Drawings, in specific locations approved by Architect for visual effect and according to the following:

1. Spaced not more than 30 feet in either direction for uninterrupted straight planes of ceilings and walls.
2. Where different substrates occur at ceilings and walls.
3. Where control joints occur in substrates at ceilings and walls.
4. Where L, U, or T shaped ceiling configurations are joined.
5. At less-than-ceiling-height cased opening frames and gypsum board openings over 60 inches in width; extend control joints from both corners at top of frame or opening up to ceiling.
6. Where less-than-ceiling-height door frames occur on walls more than 30 feet in length; extend control joints from top of frame up to ceiling at corner of hinge side of door
7. Where less-than-ceiling-height borrowed lites occur on walls more than 30 feet in length; extend control joints from top of frame up to ceiling and from bottom of frame to floor at both corners.

E. Isolation from Building Structure: Isolate gypsum board assemblies from building structure to prevent transfer of loading imposed by structural movement.

1. Provide isolation joints as indicated or required by installation quality standards.
2. Isolate ceiling assemblies abutting or penetrated by building structure.
3. Isolate partition framing and wall furring abutting or penetrated by building structure, except at floor.

F. Building Expansion Joints: Avoid bridging building expansion joints with metal framing or furring members; frame both sides of joints independently with framing or furring members, coordinating with building expansion joint products specified in Division 07 Section "Expansion Control".

G. Fire-Resistance Rated and Acoustical Putty Pads: Hand apply pads to surfaces indicated, packing tightly into gaps and openings, in such a manner that pad will remain secured to surface; pinch pleat excess material together to close gaps.

H. One-Piece Barrier Box: Install in accordance with manufacturer's recommendations as indicated on the Drawings.

I. Supplemental Accessories: Install supplementary framing, blocking, reinforcing, and bracing in gypsum board assemblies to support fixtures, equipment services, heavy trim, grab bars, toilet accessories, hand rails, furnishings, or similar construction. Comply with details indicated and recommendations of installation quality standards or manufacturer.

3.5 INSTALLING SUSPENDED GRID SYSTEM FOR INTERIOR CEILINGS

A. Installation Quality Standard: In addition to standards listed elsewhere, perform suspended ceiling work according to following, unless otherwise specified in this Section:

1. ASTM C 636 / C 636M.

B. Pattern: Lay out spaces and arrange suspension system in a regular pattern, parallel or perpendicular to surrounding walls.

C. Hangers for Ceiling System: Suspend hangers from building structural members and as follows:

1. Install hangers plumb and free from contact with mechanical and electrical equipment, insulation or other objects within ceiling plenum that are not part of supporting structural frame or ceiling suspension system. Within limitations allowed by installation quality standards, splay hangers only where required to miss obstructions and offset resulting horizontal forces by bracing, countersplaying, or other equally effective means.
2. Where width of ducts and other construction within ceiling plenum produces hanger spacings that interfere with location of hangers required to support suspension system members, install supplemental suspension members and hangers in form of trapezes or equivalent devices. Size supplemental suspension members and hangers to support ceiling loads within performance limits established by installation quality standards.
3. Secure wire hangers by looping and wire-tying, either directly to structures or to inserts, eyescrews, or other devices and fasteners that are secure and appropriate for substrate, and in a manner that will not cause them to deteriorate or otherwise fail.

4. Secure the appropriate hangers to structure, including intermediate framing members, by attaching to inserts, eyescrews, or other devices and fasteners that are secure and appropriate for structure and hanger, and in a manner that will not cause hangers to deteriorate or otherwise fail.
5. Install metal framing components for suspended ceilings so that members are level to within 1/8 in in 12 ft (3 mm in 3.6 m) as measured both lengthwise on each member and transversely between parallel members.
6. Attach hangers to structural members.
7. Do not connect or suspend any ceiling components from ducts, pipes or conduit.

D. Perimeters: Using gypsum board screws through gypsum board into metal studs, attach perimeter wall angle where suspended grid system meets vertical surfaces unless otherwise indicated; cut main beams and cross furring members to fit into wall angle.

E. Main Beams:

1. Suspend main beams spaced 48 in (1200 mm) on center from structure with wire hangers spaced not greater than 48 in (1200 mm) on center.
2. Install main beams level within 1/8 in in 12 ft (3 mm in 3.6 m) with hanger wire taut and tightly wrapped to prevent vertical movement or rotation.
3. Do not make local kinks or bends in hanger wires as a means of leveling.

F. Cross Furring Members:

1. Install cross furring members at right angles to main beams, spaced as required and join to main beams with positive interlock.
2. Install cross furring members to within 1/32 in (0.8 mm) of their required location and within 0.015 in (0.38 mm) of same horizontal plane as main beam, and never below continuous member.
3. Install additional cross furring members at right angles to beams and cross furring members to support ends of recessed light fixtures, diffusers or grilles.

G. Seismic Conditions: Install bracing wires, compression struts, and other components as required by installation quality standard.

3.6 INSTALLING METAL FRAMING COMPONENTS

A. Priority: Assemble various assemblies giving priority to partitions with higher rating; extend partition with higher rating intact through partition with lower rating.

B. Joinery and Connections: Install various metal framing components according to details indicated; for situations and conditions not indicated, comply with installation quality standards and with respective manufacturer's recommendations.

C. General Requirements: Construct partition framing of studs, tracks, and headers using screws of number and spacing required.

1. Install studs of uncoated base metal thickness as determined by Metal Framing Schedule at end of this Section.
2. Extend partition framing full height to underside of structure above, except where partitions are indicated to terminate at, or immediately above, suspended ceilings.
3. Continue framing over door frames and openings to provide support for gypsum board.
4. Space studs as indicated on Metal Framing Schedule at end of this section.

5. Cut studs 1 in (25 mm) short of full height to provide deflection relief at head of wall conditions.
6. Install studs so that flanges point in same direction.
7. Attach with screws through each stud flange and track (runner) flange, except top deflection track assemblies.
8. For fire resistance rated, smoke resistance rated, and sound resistance rated assemblies that are required to extend to underside of structure above to obtain ratings, install framing around structural and other members extending below floor slabs or roof decks, as needed to support gypsum board closures and make partitions continuous from floor to underside of structure above.
9. Do not lap studs.
10. At intersections and corners, locate studs no more than 2 in (50 mm) from partition intersections and corners and secure with screws through both flanges of studs and tracks.

D. Metal Track (Runner) Requirements:

1. Floors: Install tracks (runners) using appropriate fasteners spaced not more than 16 in (400 mm) on centers.
2. Head of Wall: Install deep leg deflection tracks using appropriate fasteners to laterally support assembly, and to avoid axial loading of assembly by deflection from building structure above.
3. Head of Wall: Where indicated, install proprietary deflection and firestop track (runner) using appropriate fasteners for the substrate and installation conditions.

E. Support for Wall Mounted Accessories or Equipment: Install back-up plate or track (runner) turned on its side, using screws as indicated or as required, to studs to properly transfer accessory or equipment load to metal framing.

F. Openings: Frame single door, double door, above ceiling openings, and below ceiling openings using studs, tracks (runners), clip angles, and headers.

1. Install 2 studs on each side of each opening in configuration indicated, including strap plates; extend from floor to underside of structure above; do not cut these studs under any circumstances. Include sound attenuation blankets within cavity when partition is scheduled to have a sound resistance rating.
2. Construct header of appropriate configuration for type of opening to be spanned and secure with clip angles; include sound attenuation blankets within cavity when partition is scheduled to have a sound resistance rating.
3. Install short intermediate studs 16 in (400 mm) on center between top track and header.
4. At partitions indicated to terminate immediately above ceiling, install diagonal bracing at not less than spacing as indicated.

G. Supplementary Framing: Install around openings and as required for blocking, bracing, and support of gravity and pullout loads of fixtures, equipment, services, heavy trim, furnishings, and similar items that cannot be supported directly by metal framing.

H. Penetrations: Maintain fire-resistance rating of assembly by installing supplementary steel framing around perimeter of penetration and fire protection behind boxes containing wiring devices, elevator call buttons, elevator floor indicators, and similar items.

I. Chase Partitions:

1. Position double row of studs vertically in tracks (runners), opposite each other in pairs with flanges pointing in same direction.
2. Attach with screws through each stud flange and track (runner) flange.
3. Cross brace between rows of studs with one of following at 48 in (1200 mm) on center maximum vertically, attached to stud webs with screws:

    a. Coated glass-mat gypsum board, 12 in (300 mm) high by chase width.
    b. Metal studs turned on side, webs back-to-back.

J. Furred Walls:

1. Erect furring channels vertically, spaced 16 in (400 mm) on centers maximum, unless otherwise indicated.
2. Attach with appropriate fasteners, staggered on flanges.
3. Splice ends by nesting channels 8 in (200 mm) and securely anchoring to surface.
4. Miter 24 in (600 mm) long horizontal furring channels at corners and space 24 in (600 mm) on centers vertically.
5. Locate furring channels around perimeter of openings and secure to surfaces.

K. Control Joints:

1. Construct metal framing as indicated by installation quality standard to allow gypsum board control joints to function as intended.
2. For control joints located in fire resistance rated walls and partitions, construct of metal studs and mineral wool, full height of partition, according to assembly fire test reports.

L. Metal Framing Spanning Multiple Floors: Construct metal framing as required using longest length metal studs possible and attach to building structure with floor bypass clips.

M. Curved Partitions:

1. Metal Track (Runner) shall comply with one of following:

    a. Field Fabricated From Straight Components:

        1) Cut top and bottom runners (tracks) through leg and web at 2 in (50 mm) intervals for arc length. In cutting lengths of runners allow for uncut straight lengths of not less than 12 in (300 mm) at ends of arcs.
        2) Bend runners to uniform curve of radius indicated and locate straight lengths so they are tangent to arcs.
        3) Support outside (cut) leg of runners by clinching a 1 in (25 mm) high by runner thickness sheet metal strip to inside of cut legs using metal lock fasteners.

    b. Field crimped using a crimping tool.
    c. Manufactured flexible products.

2. For full height partitions, attach runners to structural elements at floor and ceiling with appropriate fasteners located 2 in (50 mm) from ends and spaced 12 in (300 mm) on centers.
3. For ceiling height partitions, attach runners to suspended ceilings with toggle bolts or hollow wall anchors located 2 in (50 mm) from ends and spaced 8 in (200 mm) on centers in between where attached to suspended ceilings.

4. Position studs vertically with open sides facing in same direction and engaging floor and ceiling runners.
5. Begin and end each arc with a stud and space intermediate studs equally along arcs at stud spacing recommended by gypsum board manufacturer for radii indicated.
6. Attach studs to runners with 3/8 in (10 mm) long pan head framing screws. On straight lengths at ends of arcs, place studs 6 in (150 mm) on centers with last stud left free standing.

N. Installation Tolerances: Install each metal stud metal framing and furring member so that fastening surfaces do not vary more than 1/8 in (3 mm) from plane formed by faces of framing members.

3.7 INSTALLING GYPSUM BOARD PRODUCTS

A. General Requirements:

1. Install type of gypsum board at location indicated by gypsum board schedule at end of this Section.
2. Do not install damaged gypsum boards.
3. Install gypsum boards with finishable face side out.
4. Butt gypsum boards together for a light contact at edges and ends with not more than 1/16 in (1.5 mm) of open space between panels.
5. Do not force gypsum boards into place.
6. Do not place tapered edges against cut edges or ends.
7. Locate panel joints so that no joint will align with the edge of an opening unless control joints are installed at these locations.

B. Isolation from Building Structure:

1. Isolate perimeter of gypsum board applied to non-load-bearing partitions at structural abutments or surfaces where movement is anticipated. Provide 1/4 in to 1/2 in (6 mm in 12 mm) wide spaces at these locations or as indicated below:

    a. At top of wall or where partitions intersect open building structure members projecting below underside of floor slabs and roof decks, cut to fit profile formed by coffers, joists, beams, and other structural members; form proper annular joint to receive firestopping at rated partitions and form 3/4 in (20 mm) joint at top of wall at non-rated partitions.

2. Trim edges with edge trim where edges of gypsum boards are exposed.
3. Seal joints between edges and abutting structural surfaces with firestopping at rated locations and acoustical sealant at non-rated locations.

C. Single-Layer Board Assemblies:

1. At typical conditions, install gypsum board vertically (long dimension parallel to metal framing), to minimize short end-to-short end joints unless otherwise indicated or required by assembly fire test reports.
2. At interior of stairwells and other high walls, install gypsum boards horizontally, unless otherwise indicated or required by assembly fire test reports. Stagger abutting end joints not less than one framing member in alternate courses of gypsum boards.

D. Multi-Layer Board Assemblies: Apply base layers and face layers vertically (long dimension parallel to metal framing) with joints of base layers located over stud or furring member and face layer joints offset at least one stud space from base layer joints, unless otherwise indicated or required by assembly fire test reports. Stagger joints on opposite sides of partitions.

E. Ceiling Applications:

1. Apply gypsum board at right angles to main beams of suspension framing to minimize number of abutting end joints and avoid abutting end joints in central area of each ceiling.
2. Stagger abutting end joints of adjacent panels not less than one framing member.
3. Locate both edge or end joints of gypsum boards over intermediate supports or gypsum board back-blocking where metal framing is not present.

F. Typical Wall Applications:

1. Attach gypsum boards to metal studs so that leading edge or end of each board is attached to open (unsupported) edges of stud flanges first.
2. Stagger vertical joints on opposite sides of partitions.
3. Do not make joints other than control joints at corners of framed openings.
4. Attach gypsum boards to framing provided at doors, openings and cutouts. Install gypsum boards over door heads and extend to not less than one stud space - 16 in (400 mm) at each side of door or opening.
5. Cover both faces of metal framing with gypsum boards as indicated, except in chase walls that are braced internally.
6. Cut and fit gypsum boards around ducts, pipes, conduits, and other penetrations to form proper annular joint to receive firestopping at rated partitions.

    a. At non-rated partitions, annual space around ducts, pipes, conduit or other penetrations to be properly sized to receive sealant; 3/4 in (20 mm) maximum.
    b. “Blow–out” patches are not allowed.

7. Support both edge and end joints of gypsum boards over metal framing.

G. Curved Wall Assemblies:

1. Install 2 layers of flexible gypsum board horizontally and unbroken, to extent possible, across curved surface plus 12 in (300 mm) long straight sections at ends of curves and tangent to them.
2. On convex sides of partitions, begin installation at one end of curved surface and fasten gypsum boards to studs as they are wrapped around curve. On concave side, start fastening gypsum boards to stud at center of curve and work outward to panel ends.
3. Fasten base layer to studs with screws spaced 16 in (400 mm) on centers maximum. Center second layer over joints in base layer, and fasten to studs with screws spaced 12 in (300 mm) on centers maximum.

H. Screw Attachments:

1. Attach gypsum board to metal framing with screw fasteners of type appropriate for gypsum board materials and installation conditions:

    a. Length shall be as required by condition and penetrating metal framing not less than 3/8 in (10 mm).

b. Spacing shall be as recommended by installation quality standard, gypsum board manufacturer, or respective assembly test report.
c. Use properly adjusted, positive-clutch electric power tool equipped with adjustable screw-depth head and a Phillips bit. Nails and staples are not permitted.

2. Drive screws to slightly dimple surface without breaking face paper, fracturing core, or stripping metal framing member around screw shank.
3. Space screws for non-fire resistance rated partitions and ceilings as recommended by installation quality standards.
4. Space screws for fire resistance rated partitions as required by assembly fire test reports.
5. Start field screwing near center and work towards edges.
6. Space screws not less than 3/8 in (10 mm) from gypsum boards edges.
7. Do not attach gypsum boards to top runner where wall or partition extends to building structure unless required by fire test reports.

I. Control Joints: Form control joints and expansion joints at locations indicated with required space between edges of adjoining gypsum boards.

J. Sound Attenuation Blankets: Install blankets within stud cavities set so that they are held in place by friction with metal studs; ensure blankets are secure within cavity and will not become displaced when second gypsum board side is closed.

K. Elevator Shaft Cants: Where gypsum board shaftwall assemblies cannot be positioned within 4 in (100 mm) of shaft face of structural beams, floor edges, and similar projections into shaft, install 5/8 in (15 mm) thick gypsum board cants covering tops of projections.

1. Slope cant panels at least 75 degrees from horizontal. Set base edge of panels in adhesive and secure top edges to shaft walls at 24 in (600 mm) on centers with screws fastened to shaftwall framing.
2. Where steel framing is required to support gypsum board cants, install framing at 24 in (600 mm) on centers and extend studs from projection to shaftwall framing.

L. Sealant:

1. Comply with ASTM C 919 and manufacturers written recommendations for closing off sound-flanking paths around or through gypsum board assemblies, including sealing partitions above acoustical ceilings.
2. Seal wall assemblies at perimeters, behind control joints, and at openings and penetrations with a continuous bead of sealant material according to following:

a. Fire Resistance Sealant: Joints within fire resistance rated assemblies.
b. Water Resistance Sealant: Joints within non-fire resistance rated assemblies exposed to possible water infiltration.
c. Acoustical Sealant: All other joints.

3.8 INSTALLING TRIM ACCESSORIES

A. General: Fasten trim accessories continuously according to accessory manufacturer's instructions using gypsum board screws; installation by clinch-on tool and staples not permitted.

B. Interior Trim Accessories: Install in the following locations:

1. Corner Beads: Install trim at external corners; use screws at each flange at 9 in (225 mm) on centers, opposite each other.
2. Edge Trim: Install trim where gypsum boards abut dissimilar material, and where edge of gypsum boards would otherwise be exposed; use screws at flange at 9 in (225 mm) on centers.

    a. LC-Bead (J-Bead): Install trim at exposed conditions where back flange can be attached to framing or supporting substrate before gypsum board installation.
    b. L-Bead: Install trim at exposed conditions where trim can only be installed after gypsum board installation.
    c. J-Stop: Install trim at concealed conditions where trim can only be installed after gypsum board installation.

3. Control Joints: Install trim at appropriate locations, ensuring gypsum board is not continuous over joint; use screws at each flange at 6 in (150 mm) on centers.

    a. Control joints to extend 4 in (100 mm) above finished ceiling at non-rated conditions and extend to structure at rated wall conditions.

C. Accent Trim Accessories: Install at locations indicated, mitering corners and intersections to form tight, flush and uniform joints; use screws at each flange at 9 in (225 mm) on centers.

D. Trim Accessories at Exterior Windows: Install at locations indicated, mitering corners and intersections to form tight, flush and uniform joints; use screws at each flange at 9 in (225 mm) on centers or as recommended by manufacturer for manufactured products.

3.9 FINISHING GYPSUM BOARD PRODUCTS

A. General: Treat board joints, interior angles, edge trim, control joints, penetrations, fastener heads, surface defects, and elsewhere as required to prepare surfaces for decoration.

B. Joint Tape: Finish joints according to following:

1. Typical Paper-Faced Gypsum Board: Paper.
2. Moisture-Resistant Paper-Faced Gypsum Board: Mesh tape.

C. Finishing: Finish boards and units to achieve specified level of finish as indicated in schedule at end of Section:

1. Typical Paper-Faced Gypsum Board: Either or combination of the following as recommended by manufacturer:

    a. Setting-type joint compounds.
    b. Drying-type joint compounds.

2. Moisture-Resistant Paper-Faced Gypsum Board: Setting-type joint compounds.
3. Cementitious Backer Unit: Setting-type joint compounds.

3.10 INTERIOR SURFACING COMPOUNDS

A. Skim Coat Finishing with Joint Compound:

1. Prepare concrete surfaces for applied finishes.

a. Grind ridges, fins, and high areas.
b. Remove form oil, efflorescence and greasy deposits.
c. Fill offsets, voids, bugholes, rock pockets level with surrounding surfaces with joint compound.
d. Apply as many coats of joint compound as necessary to eliminate cracks.
e. Verify that resulting concrete surface is uniformly smooth and free of irregularities.

2. Apply setting-type joint compound or Level 5 Primer and Surfacer over entire surface in thickness recommended by manufacturer.

B. Skim Coat Finishing with Concrete Surfacing Compound:

1. Prepare concrete surfaces for applied finishes.

a. Grind ridges, fins, and high areas.
b. Remove form oil, efflorescence and greasy deposits.
c. Fill offsets, voids, bugholes, rock pockets level with surrounding surfaces with concrete surfacing compound.
d. Apply as many coats of concrete surfacing compound as necessary to eliminate cracks.
e. Verify that resulting concrete surface is uniformly smooth and free of irregularities.

2. Apply Concrete Surfacing Compound over entire surface in thickness recommended by manufacturer.

3.11 FIELD QUALITY CONTROL

A. Manufacturer's Field Service: Manufacturer's qualified technical representative shall periodically inspect Work to ensure installation is proceeding in accordance with manufacturer's designs, recommendations, instructions, and warranty requirements. Representative shall submit written reports of each visit indicating observations, findings, and conclusions of inspection.

1. Manufacturer's Technical Representative Qualifications: Direct employee of technical services department of manufacturer with experience in providing recommendations, observations, evaluations, and problem diagnostics

3.12 ADJUSTMENTS

A. Damaged Materials: Stored or installed gypsum board materials shall be classified as damaged, defective, and nonconforming Work if they have been exposed to wetness or dampness at any time prior to Substantial Completion or if they exhibit evidence of active or dormant mold or mildew. Damaged materials and assemblies shall be replaced with new and dry materials and assemblies.

3.13 PROTECTION

A. Procedures: Protect products and systems from damage during installation and remainder of construction period according to manufacturer's instructions.

3.14 METAL FRAMING SCHEDULE

A. Metal Stud Framing Schedule:

1. Stud Depth: As indicated on Drawings.
2. Spacing: Maximum 16 in (400 mm) on centers, unless otherwise indicated, or as required to comply with respective assembly test report.
3. Minimum Performance Requirements - unless otherwise indicated:

    a. Typical Partitions: L/240 at 5 lb/sq ft (239 Pa) lateral load.
    b. Elevator Shaft Partitions: L/240 at 7.5 lb/sq ft (359 Pa) lateral load.
    c. Partitions with Tile Facing: L/360 at 7.5 lb/sq ft (359 Pa) lateral load.
    d. Partitions with Interior Stone Facing Concentrated Loads: Provide delegated engineering to comply with L/720 at 10 lb/sq ft (479 Pa) lateral load.
    e. Partitions supporting Lead Lined Doors and Frames: Provide delegated engineering to comply with L/480 at 10 lb/sq ft (479 Pa) lateral load.
    f. Partitions supporting all other Concentrated Loads: Provide delegated engineering to comply with L/360 at 10 lb/sq ft (479 Pa) lateral load

4. Minimum Uncoated Base Metal Thickness:

    a. Typical Gypsum Board Assemblies: As determined by manufacturer's limiting height engineering data unless otherwise indicated.

        1) 25 Gage or 25 Gage Equivalent Studs: Not acceptable.
        2) 25 Gage or 25 Gage Equivalent Studs: Typical at partitions without wall-mounted components installed on either side.
        3) 22 Gage Studs: Typical partitions unless otherwise indicated.
        4) 20 Gage or 20 Gage Equivalent Studs:

            a) Partitions supporting ceramic or stone tile.
            b) Partitions with gypsum board on one side only.
            c) At door jambs.
            d) Partitions supporting wall hung cabinets or shelving.
            e) Partitions with lead lining.

        5) 20 Gage Studs: Partitions enclosing high-rise elevator shafts and stairwells.

            a) 20 Gage Equivalent Studs: Allowed only if part of a tested assembly.

        6) 16 Gage Studs: Typical at partitions supporting stone facing unless otherwise indicated.

    b. Gypsum Board Assemblies required to Support Concentrated Loads: As required by delegated engineering professional but not less than minimum uncoated base metal thickness indicated above.
    c. Gypsum Board Assemblies required to Withstand Seismic Loads: As required by delegated engineering professional but not less than minimum uncoated base metal thickness indicated above.

3.15 GYPSUM BOARD SCHEDULE

A. Moisture-Resistant Gypsum Board: Install Moisture-Resistive Gypsum Board at all applications.

~~B. Gypsum Board Schedule, General: Install the designated gypsum board product based on exposure classification to water and / or moisture and applied finish system as follows, unless otherwise indicated or scheduled on the Drawings.~~

C. No Exposure: Surfaces not normally exposed to water and / or moisture sources including but not limited to the following:

1. Typical walls and ceilings.

a. Paint and Wall Coverings Only: Typical paper-faced gypsum board.
b. Tile and Adhered Sheet/Panel Coverings: Moisture-resistant coated-glass-mat gypsum board.

2. Horizontal fire-rated assemblies and ceilings:

a. Paint Only: Paper-faced Type C gypsum board.

3. Walls in acoustical barriers as indicated in the Drawings.

a. Paint and Wall Coverings Only: Paper-faced acoustically enhanced gypsum board.

4. Curved walls:

a. Paint and Wall Coverings Only: Paper-faced flexible gypsum board; installed in two layers.

5. Shaft-Side Face of Shaft-Liner Assemblies:

a. No Finish Required: Moisture-resistant paperless glass mat shaft-liner gypsum board.
b. No Finish Required: Moisture-resistant paper-faced shaft-liner gypsum board.

D. Incidental Exposure: Surfaces immediately adjacent to water and / or moisture sources including, but not limited to, the following locations:

1. Walls and ceilings in mechanical equipment rooms and janitor closets.
2. Walls within 24 inches of centerline of drinking fountains, isolated wall-hung lavatories, and countertop sinks and other similar water sources.
3. Interior face of exterior walls.
4. Acceptable gypsum board products for the above listed conditions:

a. Paint and Wall Coverings: Moisture-resistant paper-faced or moisture-resistant paperless glass-mat gypsum board.
b. Tile and Adhered Sheet/Panel Coverings: Moisture-resistant coated-glass-mat gypsum board.

5. Top of walls above ceilings adjacent to mechanical equipment in corridors.

a. Moisture-resistant paperless glass-mat gypsum board.

E. Direct Exposure: Surfaces normally soaked, saturated, or regularly and frequently exposed to water and / or moisture including, but not limited to, the following locations:

1. Walls and ceilings in toilet rooms and bathrooms including bathtubs and showers:

a. Paint and Wall Coverings: Moisture-resistant paper-faced or moisture-resistant paperless glass-mat gypsum board.

b. ~~Tile and Adhered Sheet/Panel Coverings: Moisture-resistant coated-glass-mat gypsum board.~~

2. ~~Walls and ceilings in saunas, steam rooms, gang showers, and pool enclosures:~~

a. ~~Tile Only: Cementitious backer units.~~

3.16 GYPSUM BOARD FINISHING SCHEDULE

A. Gypsum Board Finishing Schedule, General: Finish panels to Levels of Finish indicated below. Apply joint tape over panel joints, except those with trim having flanges not intended for tape. Sand between coats and after last coat to produce a surface free of defects and ready for applied finish system.

1. Levels of Finish: According to ASTM C 840.

B. Preparation: Apply joint compound at open joints, panel edges, and damaged surface areas.

C. Level 1: At following locations, embed tape at joints in joint compound unless a higher level of finish is required for fire resistance rated assemblies. Trim accessories to be installed but not embedded in joint compound unless required for fire rating:

1. Ceiling plenum areas above ceilings.
2. Concealed areas.
3. Substrate for interior stone facing.
4. Substrate for interior woodwork.
5. Unfinished areas designated for future expansion.
6. Not used.

D. Level 2: At following locations, embed tape and apply separate first coat of joint compound to tape, fasteners, and trim flanges:

1. Substrate for tiling.
2. Not used.

E. Level 3: At following locations, embed tape and apply separate first and second coats of joint compound to tape, fasteners, and trim flanges:

1. Mechanical, electrical, data and elevator equipment rooms.
2. Stair towers.
3. Not used.

F. Level 4: At following locations, embed tape and apply separate first, fill, and finish coats of joint compound to tape, fasteners, and trim flanges:

1. Areas to receive paint.
2. Areas to receive wall coverings.
3. Not used.

G. Level 5: At following locations, embed tape and apply separate first, fill, and finish coats of joint compound to tape, fasteners, and trim flanges, and apply skim coat of joint compound or Level 5 Primer and Surfacer over entire surface:

1. Areas to receive whiteboard paint or dry erase board coatings.
2. Curved ceilings and partitions.
3. Areas as indicated on the Drawings.
4. Not used.

END OF SECTION

SECTION 09 3000

TILING

PART 1 - GENERAL

1.1 SUMMARY

A. Section Includes: Modular tiles, membrane underlayments, setting materials, grouting materials, accessories, and supplementary items necessary for installation.

1.2 DEFINITIONS

A. General: Definitions in the ANSI A108 series of tile installation standards and in ANSI A137.1 apply to Work of this Section unless otherwise specified.

B. Module Size: Actual tile size plus joint width indicated.

C. Face Size: Actual tile size, excluding spacer lugs.

D. Ceramic (Mosaic) Tile: Tile formed by either the dust-pressed or plastic method, usually 1/4 in to 3/8 in (6 mm to 10 mm) thick, and having a facial area of less than 6 sq in (3900 mm^2). Ceramic mosaic tile may be of either porcelain or natural clay composition and they may be either plain or with an abrasive mixture throughout.

E. LHT: Large and Heavy Tile. Tiles are typically larger than 8 in by 8 in (200 mm by 200 mm) or with at least one side greater than 15 in (375 mm) or weigh 5 psf (239 Pa) or heavier and have an ungauged thickness.

F. Paver Tile: Glazed or unglazed porcelain or natural clay tile formed by dust-pressed method having a facial area of 6 sq in (3900 mm^2) or more.

G. Porcelain Tile: A ceramic tile or paver tile that is generally made by the dust-pressed method of a composition resulting in a tile that is dense, impervious, fine grained, and smooth with sharply formed face.

H. Quarry Tile: Glazed or unglazed tile, made by extrusion process from natural clay or shale usually having a facial area of 6 sq in (3900 mm^2) or more.

I. Wall Tile: A glazed tile with a body that is suitable for interior use and which is usually non-vitreous and is not required nor expected to withstand excessive impact or be subject to freezing and thawing conditions.

1.3 ACTION SUBMITTALS

A. Product Data: Manufacturer's technical literature for each product and system indicated.

1. Include manufacturer's specifications for materials, finishes, construction details, installation instructions, and recommendations for maintenance.

B. Shop Drawings: Show details of fabrication and installation, including plans, elevations, sections, details of components and attachments to other work. Distinguish between shop and field-assembled work.

1. Include plans of rooms and elevations of walls showing tile and patterns; include sections showing underlayments, setting materials, and grouting materials.
2. Include details showing widths and locations of expansion, contraction, control, and isolation joints in tile substrates and finished tile surfaces.

C. Samples for Verification Purposes: Submit samples for each item listed below of size and construction indicated. Where products involve normal color and texture variations, include sample sets showing the full range of variations expected.

1. Tile: Each type and composition of tile and for each color and finish required, at least 12 in (300 mm) square, mounted on rigid panel, and with grouted joints using product complying with specified requirements and in color approved for completed work.
2. Tile Trim and Accessories: Full-size units of each type and for each color required.
3. Metal Edge Strips: 6 in (150 mm) lengths of specified profile.

1.4 INFORMATIONAL SUBMITTALS

A. List of Materials for Layered Mock-Up for Construction Quality Purposes:

1. Product, material, and equipment names, model numbers, lot numbers, batch numbers, source of supply, and other information required to identify items used.
2. Receipt of list does not constitute acceptance of deviations from Contract Documents, unless such deviations are specifically approved by Architect in writing.

B. Master Grade Certificates: Submit for each shipment, type, and composition of tile, signed by tile manufacturer and installer.

C. Product Test Reports: Written reports based on evaluation of comprehensive tests performed by qualified testing agency indicating that each product complies with requirements.

D. Field Quality Control Reports: Written report of testing and inspection required by “Field Quality Control”.

E. Manufacturer’s Project Acceptance Document: Certification by the manufacturer that its product(s) are approved, acceptable, suitable for use in specific locations, for specific details, and for applications indicated, specified, or required, and that a warranty will be issued.

F. Warranty: Sample of warranty.

1. Provide manufacturer’s written warranty covering materials and installation (labor) stating obligations, remedies, limitations, and exclusions.

1.5 CLOSEOUT SUBMITTALS

A. Maintenance Instructions: Include in operation and maintenance manual required by Division 01 Section "Closeout Requirements". Submit manufacturer’s instructions for maintenance of installed work, including methods and frequency for maintaining optimum condition under anticipated use. Include precautions against cleaning materials and methods which may be detrimental to finishes and performance.

1.6 MAINTENANCE MATERIAL SUBMITTALS

A. Extra Materials: Furnish the following extra materials that match and are from same production runs as products installed, packaged with protective covering for storage and identified with labels describing contents:

1. Furnish quantity of full-size tile and trim units equal to 2 percent of amount installed, for each type, composition, color, pattern, and size.
2. Furnish quantity of grout equal to 2 percent of amount installed for each type, composition, and color indicated.

1.7 QUALITY ASSURANCE

A. Mock-ups: Prior to fabrication and installation, build mock-up for each form of construction and finish required to verify selections made under sample Submittals and to demonstrate aesthetic effects and qualities of materials and execution. Build mock-up to comply with the following requirements, using materials indicated for the completed Work:

1. Build mock-up in the location and of the size indicated or, if not indicated, as directed by Architect. Contractor shall provide structural support framework.

    a. Show typical components, attachments to building structure, and requirements of installation.
    b. Build mock-ups in a layered fashion omitting tile in particular areas to reveal underlayment membranes and setting bed installation including but not limited to the following:

        1) Tiled floor conditions at thin-set mortar setting beds.
        2) Tiled floor conditions at LHT mortar setting beds.
        3) Tiled floor conditions at thick-set mortar setting beds.
        4) Movement joints at tiled floor conditions.
        5) Tiled shower stall including three walls, floor, curb, and threshold.
        6) Tiled wall conditions, including one interior corner.

2. Notify Architect seven days in advance of the dates and times when mock-up will be installed.
3. Obtain Architect's acceptance of mock-ups before starting fabrication or installation.
4. Acceptance of mock-ups does not constitute acceptance of deviations from the Contract Documents contained in mock-ups unless such deviations are specifically noted by Contractor and accepted by Architect in writing.
5. Demolish and remove mock-ups when directed by Architect unless accepted to become part of the completed Work.

1.8 PRE-INSTALLATION CONFERENCE

A. Pre-Installation Conference: Before Work begins, conduct conference at Project site.

1.9 DELIVERY, STORAGE, AND HANDLING

A. Deliver and store packaged materials in original containers with seals unbroken and labels intact until time of use. Comply with requirements in ANSI A137.1 for labeling tile packages.

B. Store tile and cementitious materials on elevated platforms, under cover, and in a dry location.

C. Store aggregates where grading and other required characteristics can be maintained and contamination can be avoided.

D. Store liquid materials in unopened containers and protected from freezing.

E. Handle tile that has temporary protective coating on exposed surfaces to prevent coated surfaces from contacting backs or edges of other units. If coating does contact bonding surfaces of tile, remove coating from bonding surfaces before setting tile.

1.10 PROJECT CONDITIONS

A. Environmental Limitations: Install tile only when construction in room is completed and ambient temperature and humidity conditions are being maintained to comply with referenced standards and manufacturer's written instructions.

1.11 COORDINATION

A. Coordinate installation of products and systems with interfacing and adjoining construction to provide a successful installation without failure.

1.12 WARRANTY

A. Installer's Warranty: Furnish installer's written workmanship warranty signed by an authorized representative using installer's standard form agreeing to provide labor required to repair or replace work which exhibits workmanship defects. "Defects" is defined to include but not limited to deterioration or failure to perform as required.

1. Warranty Period: Installer shall warrant the installation to be free from workmanship Defects for a period of 2 years from date of Substantial Completion.

PART 2 - PRODUCTS

2.1 MANUFACTURERS AND PRODUCTS

A. Acceptable Manufacturers: Subject to compliance with requirements of Contract Documents as judged by the Architect, provide product by one of manufacturers listed. If not listed, submit as substitution according to the Conditions of the Contract and Division 01 Section "Substitution Procedures".

B. Basis of Design (Product Standard): Contract Documents are based on products and systems specified to establish a standard of quality. Other manufacturers offering products having equivalent characteristics may be considered, provided deviations are minor and comply with requirements of Contract Documents as judged by the Architect.

1. Selections: As scheduled or as indicated in Design Selections.

2.2 MATERIALS, GENERAL

A. Single Source Responsibility: Furnish each type of product from single manufacturer. Provide secondary materials only as recommended by manufacturer of primary materials.

1. Tile: For each tile, obtain of same color, finish, composition, and type, from same source and production run.
2. Setting and Grouting Materials: Obtain ingredients of uniform quality for each mortar and grout component from single manufacturer.

2.3 PERFORMANCE REQUIREMENTS

A. Slip Resistance Requirements for Floor Tile:

1. Standards: Products and installation shall comply with ANSI A137.1, and state and local accessibility standards.
2. Floor Tile Slip Resistance: For tile installed on walkway surfaces, provide products with the following value as determined by testing identical products by the DCOF AcuTest Method per ANSI A137.1:

    a. Walkway Surfaces: Minimum 0.42.

2.4 CERAMIC TILE PRODUCTS

A. Material Quality Standard: ANSI A137.1 "Specifications for Ceramic Tiling" for types, compositions, and grades of tiling indicated.

1. Furnish tiling complying with "Standard Grade" requirements, unless otherwise indicated.

B. Ceramic Tile, General: Thin ceramic surfacing unit made from clay, porcelain, or mixture of ceramic materials, glazed or unglazed, fired above red heat to temperature sufficient to produce specific physical properties and characteristics specified.

C. Factory Blending: For tile exhibiting color variations, blend tile in factory and package so that tile units taken from one package show the same range in colors as those taken from other packages and match approved samples.

D. Mounting: Where factory-mounted tile is used, provide back- or edge-mounted tile assemblies as standard with manufacturer. Where tile is intended for installation in wet exposure areas, do not use factory mounted tile assemblies unless tile manufacturer states that this type of mounting is suitable for installation indicated.

E. Factory-Applied Temporary Protective Coating for Epoxy Grout Installations: Where recommended by tile and grout manufacturer, protect exposed surfaces of tile against adherence of mortar and grout by pre-coating tile face surfaces with a continuous protective film that is easily removable without damaging tile or grout. Do not coat unexposed tile surfaces.

2.5 GLASS TILE PRODUCTS

A. General: Tile having an overall non-crystalline microstructure with Silica Dioxide as the primary constituent and manufactured by one or more of three primary processes: cast, fused or low-temperature coated.

B. ANSI Glass Tile Standard: Provide glass tile that complies with ANSI A137.2 for types and other characteristics indicated.

1. Furnish tiling complying with Standard grade requirements unless otherwise indicated.

2.6 STONE TILE PRODUCTS

A. Stone Tile, General: Natural quarried stone, pre-fabricated into modular tiles having uniform and consistent dimensional tolerances; with sawn backs.

B. Material Quality Standard:

1. Granite, ASTM C 615.
2. Limestone, ASTM C 568.
3. Marble, ASTM C 503.
4. Slate, ASTM C 629.

2.7 WATERPROOF MEMBRANE UNDERLAYMENTS FOR INTERIOR APPLICATIONS

A. General: Manufacturer's standard product that complies with ANSI A118.10 and is acceptable to authorities having jurisdiction for use as shower pan waterproofing, as selected from one of the following available options. Include primer, pre-fabricated corners, seaming cement, detail tape, sealant, and other standard accessory products required for application provided by membrane manufacturer.

B. Unfaced Plastic Waterproof Membrane Underlayments:

1. Unfaced Chlorinated-Polyethylene (CPE):

a. Description: ASTM D 4068, non-plasticized, chlorinated polyethylene; minimum 0.040 in (1.0 mm) nominal thickness.
b. Manufacturer and Product: The Noble Company; Chloraloy.

2. Unfaced Polyvinyl Chloride (PVC):

a. Description: ASTM D 4551, flexible polyvinyl chloride sheet; minimum 0.040 in (1.0 mm) nominal thickness.
b. Manufacturer and Product: Compotite Corporation; Composeal Blue Vinyl 40.

3. Locations: Thick-set shower pan installations.

C. Faced Plastic Waterproof Membrane Underlayments:

1. Faced Chlorinated Polyethylene (CPE):

a. Description: Non-plasticized, chlorinated polyethylene faced on both sides with high-strength, nonwoven polyester fabric; minimum 0.030 in (0.75 mm) nominal thickness.
b. Manufacturers and Products:

1) The Noble Company; Nobleseal TS.
2) Laticrete; Hydro Ban Sheet Membrane.

2. Faced Polyvinyl Chloride (PVC):

a. Description: ASTM D 4551, multiple layers of polyvinyl chloride sheet heat-fused together and to facings of bondable nonwoven polyester; minimum 0.040 in (1.0 mm) nominal thickness.

b. Manufacturer and Product: Compotite Corporation; Composeal Gold.

3. Locations: Thin-set installations at floors, walls, and ceiling; including thin-set shower pan floor installations.

2.8 CRACK ISOLATION MEMBRANE UNDERLAYMENTS

A. General: Manufacturer's standard product that complies with ANSI A118.12 as selected from one of the following available options. Include primer, pre-fabricated corners, seaming cement, detail tape, sealant, and other standard accessory products required for application provided by membrane manufacturer.

B. Fluid-Applied Crack Isolation Membrane Underlayment: Not permitted or allowed within shower and bathtub areas.

1. Description: Manufacturer's proprietary system consisting of liquid applied component and synthetic fabric sheet reinforcement.
2. Manufacturers and Products:

a. ARDEX Engineered Cements; Ardex 8 + 9 Waterproofing and Crack Isolation Membrane.
b. Custom Building Products; 9240 Waterproofing and Crack Isolation Membrane.
c. Laticrete International Inc.; Laticrete 9235 Waterproof Membrane.
d. Laticrete International Inc.; Blue 92 Anti-Fracture Membrane.
e. Mapei Corp.; Mapelastic 400.

C. Faced Chlorinated Polyethylene (CPE) Crack Isolation Membrane Underlayment:

1. Description: Non-plasticized, chlorinated polyethylene faced on both sides with high-strength, nonwoven polyester fabric; minimum 0.030 in (0.75 mm) nominal thickness.
2. Manufacturer and Product: The Noble Company; NobleSeal CIS.

2.9 SETTING (MORTAR AND GROUT) MATERIALS

A. Material Quality Standards: ANSI A118 Series as indicated.

B. Thick-Set Portland Cement Mortar:

1. Material Quality Standard: ANSI A118.1, with the following physical properties:

a. Cleavage Membrane: One of the following:

1) Any membrane underlayment product listed and designated by manufacturer to be suitable for thick-set applications.
2) Polyethylene Sheeting: ASTM D 4397, minimum 4 mils (0.10 mm) thick.

b. Portland Cement: ASTM C 150, Type I, grey color. Use white color with light colored stone, translucent marble or light color grout as recommended by manufacturer.
c. Hydrated Lime: ASTM C 206, Type S or ASTM C 207, Type S.
d. Aggregate: ASTM C 144, washed clean and graded natural sand passing 16-mesh sieve.

e. Reinforcing Wire Fabric: Galvanized, welded wire fabric, 2x2 W0.3/0.3 (2 in by 2 in, 16/16 wire) (50 mm by 50 mm MW2.0/2.0); comply with ASTM A 185 and ASTM A 82 except for minimum wire size.
f. Suitable for use in thick set mortar beds up to 2 in (50 mm) thick.

C. LHT Latex-Portland Cement Mortar:

1. Material Quality Standard: ANSI A118.4, with the following physical properties:

a. Manufacturer's premium polymer modified LHT mortar product; gray color. Use white color with light colored stone, translucent marble or light color grout as recommended by manufacturer.
b. Integral antimicrobial product added during manufacturing to resist mold and mildew growth.
c. Non-sag capability.
d. Suitable for use in LHT mortar beds up to 1/2 in (12 mm) thick.

2. Manufacturers and Products - Floor Tiling:

a. ARDEX Engineered Cements; X 77 Microtec.
b. Custom Building Products; ProLite Tile & Stone Mortar.
c. Laticrete International, Inc.; Laticrete 255 MultiMax.
d. Mapei Corp.; Ultraflex LFT Mortar.

D. Thin-Set Latex-Portland Cement Mortar (For All Tile Types Except Glass):

1. Material Quality Standard: ANSI A118.4, with the following physical properties:

a. Manufacturer's premium polymer modified thin-set product; gray color. Use white color with light colored stone, translucent marble or light color grout as recommended by manufacturer.
b. Integral antimicrobial product added during manufacturing to resist mold and mildew growth.
c. Non-sag capability.
d. Suitable for use in thin set mortar beds up to 1/4 in (6 mm) thick.

2. Manufacturers and Products - Floor Tiling:

a. ARDEX Engineered Cements; X 77 Microtec.
b. Custom Building Products; ProLite Tile & Stone Mortar.
c. Laticrete International, Inc.; Laticrete 254 Platinum Thin-Set Mortar.
d. Mapei Corp.; Ultraflex 3 Mortar.

3. Manufacturers and Products - Wall Tiling:

a. ARDEX Engineered Cements; X 77 Microtec.
b. Custom Building Products; ProLite Tile & Stone Mortar.
c. Laticrete International, Inc.; Laticrete 255 MultiMax Multipurpose Thin-Set Mortar.
d. Mapei Corp.; Ultralite Mortar.

E. Thin-Set Mortar for Glass Tile:

1. Material Quality Standard: ANSI A118.4, manufacturer's premium, glass tile mortar.

2. Manufacturers and Products:

a. ARDEX Engineered Cements; X 77 Microtec.
b. Custom Building Products; Glass Tile Premium Thin-Set Mortar.
c. Laticrete International, Inc.; Glass Tile Adhesive.
d. Mapei Corp.; Mosaic & Glass Tile Mortar.

F. Epoxy Mortar:

1. Material Quality Standard: ANSI A118.3, with the following physical properties:

a. 100 percent solids.
b. Chemical-resistant, water-cleanable, multiple component product.
c. Resistant to intermittent exposure to temperatures of up to 212 deg F. (100 deg C.).
d. Rated extra heavy service according to ASTM C 627.
e. Will not stain when used for stone tile, and acceptable to stone supplier.

2. Manufacturers and Products:

a. ARDEX Engineered Cements; WA Epoxy Grout and Adhesive.
b. Custom Building Products; EBM Lite Epoxy Bonding Mortar.
c. Laticrete International, Inc.; Latapoxy 300.
d. Mapei Corp.; Kerapoxy 410.

G. Latex-Portland Cement Grout for Tile Joints:

1. Unsanded Grout:

a. Material Quality Standard: ANSI A118.7, with following physical properties:

1) Manufacturer's premium polymer modified unsanded grout product.
2) Integral antimicrobial product added during manufacturing to resist mold and mildew growth.

b. Manufacturers and Products:

1) ARDEX Engineered Cements; FG-C Unsanded Grout.
2) Custom Building Products; Prism Surecolor Grout.
3) Laticrete International, Inc.; Permacolor Grout.
4) Mapei Corp.; Ultracolor Plus Grout.

c. Locations: Tile Joints less than 1/8 in (3 mm) wide.

2. Sanded Grout:

a. Material Quality Standard: ANSI A118.7, with following physical properties:

1) Manufacturer's premium polymer modified sanded grout product.
2) Integral antimicrobial product added during manufacturing to resist mold and mildew growth.

b. Manufacturers and Products:

1) ARDEX Engineered Cements; FL Rapid Set, Flexible, Sanded Grout.
2) Custom Building Products; Prism Surecolor Grout.
3) Laticrete International, Inc.; Permacolor Grout.
4) Mapei Corp.; Ultracolor Plus Grout.

c. Locations: Tile Joints 1/8 in (3 mm) wide and larger.

~~H. Epoxy Grout:~~

~~1. Material Quality Standard: ANSI A118.3, with following physical properties:~~

~~a. 100 percent solids.~~
~~b. Chemical-resistant, water-cleanable, multiple-component product.~~
~~c. Resistant to intermittent exposure to temperatures of up to 212 deg F. (100 deg C.).~~
~~d. Mold and mildew resistant.~~

~~2. Manufacturers and Products:~~

~~a. ARDEX Engineered Cements; WA Epoxy Grout.~~
~~b. Custom Building Products; CEG-IG 100% Solids Industrial Grade Epoxy Grout.~~
~~c. Laticrete International, Inc.; Latapoxy 2000 Industrial Grout.~~
~~d. Mapei Corp.; Kerapoxy IEG CQ.~~

~~I. Proprietary Epoxy Grout: Proprietary high performance epoxy grout; provides high degree of stain resistance; cleanable to the original color.~~

~~1. Material Quality Standard: ANSI A118.3.~~
~~2. Manufacturers and Products:~~

~~a. Laticrete International, Inc.; SpectraLOCK PRO Grout.~~
~~b. Mapei Corp.; Kerapoxy CQ.~~

2.10 ELASTOMERIC SEALANTS

A. Sealant Colors: Match color of adjacent grout unless otherwise indicated.

B. Mildew-Resistant Floor or Wall Joint Sealant:

1. Material Quality Standard: ASTM C 920, Type S, Grade NS, Class 25, with following physical properties:

a. Integral antimicrobial product added during manufacturing to resist mold and mildew growth.
b. Intended for sealing interior ceramic tile joints and other nonporous substrates.
c. Resistant to in-service exposures of high humidity and temperature extremes.

2. Description: One-part mildew-resistant silicone sealant.
3. Manufacturers and Products:

a. ARDEX Engineered Cements; SX.
b. Custom Building Products; Commercial 100% Silicone Caulk.
c. Dow Corning Corp.; 786.

d. Laticrete International, Inc.; Latasil.
e. Pecora Corp.; 898.
f. Tremco Inc.; Tremsil 200.

C. Chemical Resistant Floor Joint Sealant:

1. Description: Two-part self-leveling epoxy sealant.
2. Manufacturers and Products:

a. BASF Construction Chemicals; MasterSeal CR 190 (Formerly Sonneborn Epolith-P).
b. Euclid Chemical Co.; Euco 800.
c. L&M Construction Chemical Inc.; Epoflex SL.

D. Backer Rods:

1. Material Quality Standard: ASTM C 1330, Type B.
2. Description: Non-gassing (when punctured), bi-cellular polyethylene or polyolefin foam rod with a surface skin, of size and density to control sealant depth and otherwise contribute to producing optimum sealant performance.
3. Manufacturers and Products:

a. BASF Construction Chemicals; MasterSeal 921 (Formerly Sonneborn Soft Backer Rod).
b. Nomaco Inc.; Sof Rod.

E. Backer Tape: Bond-breaking polyethylene or other plastic tape, self-adhesive where applicable, recommended by sealant manufacturer for preventing sealant from adhering to back of joint where such adhesion would result in sealant failure.

2.11 RELATED MATERIALS

A. Cementitious Underlayments: Trowelable or self-leveling as required by conditions; pre-mixed, latex-modified, Portland cement based formulation provided by or specifically approved by setting material manufacturer; include primers if required for concrete substrate condition.

B. Patching Compounds: Trowelable pre-mixed, latex-modified, Portland cement based formulation provided by or specifically approved by setting material manufacturer; include primers if required for concrete substrate condition.

C. Metal Transition Strips (Tile to Adjacent Flooring Material):

1. Schluter Systems LP; Schiene, stainless steel.

D. Glass-Fiber Tape: Self-adhering, alkali-resistant, glass-fiber tape, 10 by 10 or 10 by 20 threads per 1 in (25 mm).; minimum 2 in (50 mm) wide.

E. Tile Cleaner: Neutral cleaner capable of removing soil and residue without harming tile and grout surfaces, provided by or specifically approved by tile and grout manufacturers.

F. Grout Sealer: Manufacturer's standard silicone product for sealing grout joints and that does not change color or appearance of grout.

2.12 MIXING MORTARS AND GROUT

A. General Procedures:

1. Mix to comply with referenced quality standards and manufacturers' written instructions.
2. Add materials, water, and additives in accurate proportions.
3. Use type of mixing equipment, speeds, containers, time, and other procedures to produce uniform quality with optimum performance characteristics for installations indicated.

PART 3 - EXECUTION

3.1 EXAMINATION

A. Acceptance of Surfaces and Conditions: Examine substrate surfaces to which tile will be installed for compliance with requirements, installation tolerances, and other conditions affecting performance. Proceed only when unsatisfactory conditions have been corrected in a manner complying with the Contract Documents. Starting work within a particular area will be construed as acceptance.

1. Verify that installation of grounds, anchors, recessed frames, electrical and mechanical units of work, and similar items located in or behind tile has been completed.
2. Verify that joints and cracks in tile substrates are coordinated with tile joint locations; if not coordinated, adjust joint locations in consultation with Architect.

3.2 INSTALLATION, GENERAL

A. Installation Quality Standard: In addition to standards listed elsewhere, perform tile work according to following, unless otherwise specified:

1. Respective manufacturer's written installation instructions.
2. Accepted submittals.
3. Contract Documents.
4. ANSI A108 installation method indicated.
5. TCNA installation method indicated.

B. General Requirements:

1. Extend tile into recesses and under or behind equipment and fixtures to form a complete covering without interruptions unless otherwise indicated.
2. Terminate work neatly at obstructions, edges, and corners without disrupting pattern or joint alignments.
3. Accurately form intersections and returns.
4. Perform cutting and drilling of tile without marring visible surfaces.
5. Grind cut edges of tile abutting trim, finish, or built-in items for straight aligned joints, to form smooth edges.
6. Fit tile closely to electrical outlets, piping, fixtures, and other penetrations so that plates, collars, or covers overlap tile by not less than 1/8 in (3 mm).

C. Jointing Pattern:

1. Unless otherwise indicated, lay tile in grid pattern.

2. Align joints when adjoining tiles on floor, base, walls, and trim are same size.
3. Lay out tile work and center tile fields in both directions in each space or on each wall area. Adjust to minimize tile cutting.
4. Provide uniform joint widths of size recommended by tile and grout manufacturer unless otherwise indicated.
5. For tile mounted in sheets, make joints between tile sheets same width as joints within tile sheets so that extent of each sheet is not apparent in finished work.

D. Wainscots: Lay out tile to next full tile beyond dimensions indicated, and finish with bullnose shape.

3.3 PREPARATION

A. General: Comply with manufacturer's instructions, recommendations, and specifications for cleaning and surface preparation. Surfaces shall have no defects, contaminants, or errors which would result in poor or potentially defective installation or would cause latent defects in Work.

B. Substrate Cleaning: Remove curing compounds, coatings, laitance, efflorescence, concrete dust, dirt, oil, gypsum board dust, paint, and other residue that would adversely affect or reduce bonding.

C. Concrete Floor Preparation:

1. Prepare concrete floor substrates to comply with flatness tolerance of 1/4 in in 10 ft (6 mm in 3 m) as follows:

    a. Fill cracks, holes and depressions with trowelable cementitious underlayments and patching compounds.
    b. Remove concrete protrusions, bumps, and ridges by sanding or grinding.

2. If substrate does not have fine broom finish, mechanically scarify concrete substrates to not less than ICRI CSP 4 finish.
3. Where indicated, prepare substrates to receive waterproofing by applying a reinforced mortar bed that complies with ANSI A108.1A and is sloped 1/4 in per foot (1:50) toward drains.

D. Substrate Joints, Gaps, Penetrations, and Different Substrates within Shower and Tub Enclosures: Prior to installing tile, seal the following joints, gaps, and spaces between differing materials as follows:

1. Base of Wall Joints within Shower and Tub Enclosures: Apply wall joint sealant at joint between Coated Glass-Mat Water Resistant Board (specified in Division 09 Section "Gypsum Board Assemblies") and Tub Enclosure or Prefabricated Shower Receptor, Thick-set Mortar Bed, or floor slab to create water resistant barrier in accordance with TCNA Installation B420.
2. Penetrations: Apply wall joint sealant at penetrations through wall substrates to create water resistant barrier; especially at piping and valve penetrations.
3. Toilet Accessories: Apply wall joint sealant at fastener penetrations and around perimeter of backing plates to create water resistant barrier.
4. Joints and Corners: Apply glass-fiber tape to joints and corners of substrates within Showers and Tub Enclosures with thin-set mortar.

E. Blending: Verify tile has been factory blended and packaged as specified; if not, either return to manufacturer or blend tiles at site before installing.

F. Field-Applied Temporary Protective Coating: Where needed to prevent grout from staining or adhering to exposed tile surfaces, pre-coat with continuous film of temporary protective coating, taking care not to coat unexposed tile surfaces.

3.4 WATERPROOF MEMBRANE UNDERLAYMENT INSTALLATION

A. Installation Quality Standard: ANSI A108.13 and manufacturer's written instructions to produce waterproof membrane of uniform thickness and bonded securely to substrate.

B. General Requirements:

1. If required by manufacturer, prime concrete substrate.
2. Install to produce a continuous waterproof membrane of uniform thickness bonded securely to substrate, without wrinkles, bubbles, buckles or kinks.
3. For sheets, overlap and seal seams.
4. Turn membrane up wall at locations where tile is scheduled for wall or base.
5. Roll installed sheet if required by manufacturer.
6. Install tile after waterproofing has cured and been tested determined it is watertight.

3.5 CRACK ISOLATION MEMBRANE UNDERLAYMENT INSTALLATION

A. General Requirements:

1. If required by manufacturer, prime concrete substrate.
2. Install to produce a continuous crack isolation membrane of uniform thickness bonded securely to substrate, without wrinkles, bubbles, buckles, or kinks.
3. For sheets, overlap and seal seams.
4. For liquid applied products, brush or roll liquid uniformly over area in number of coats required and install reinforcing fabric.
5. Roll installed sheet if required by manufacturer.
6. After installation of tile, install floor joint sealant in tile joints recommended by manufacturer to coordinate with membrane strips.

3.6 TILE INSTALLATION

A. Comply with TCNA's "Handbook for Ceramic Tile Installation" for TCNA installation methods specified in tile installation schedules. Comply with parts of the ANSI A108 Series "Specifications for Installation of Ceramic Tile" that are referenced in TCNA installation methods, specified in tile installation schedules, and apply to types of setting and grouting materials used.

B. Installation Quality Standard: Install tile according to following standards:

1. Thick-set Mortar: ANSI A108.1 and A108.5; for recessed subfloor.
2. LHT Mortar: ANSI A108.5; for floor tiles larger than 8 in by 8 in (200 mm by 200 mm) or with at least one side greater than 15 in (375 mm) and where subfloor is not recessed.
3. Thin-set Latex-Portland Cement Mortar: ANSI A108.5; for floor tiles 8 in by 8 in (200 mm by 200 mm) and smaller where subfloor is not recessed; and for interior wall tiles.
4. Epoxy Mortar: ANSI A108.9.
5. Latex-Portland Grout: ANSI A108.10, typical unless indicated otherwise.

6. Epoxy Grout: ANSI A108.9, where indicated.

C. Back Buttering: For following installations, obtain minimum 95 percent mortar coverage as in referenced ANSI A108 series of installation standards:

1. Exterior tile floors.
2. Tile floors and ceilings in wet and limited water exposures.
3. Tile floors installed with epoxy mortars.
4. Tile floors composed of tiles 12 in by 12 in (300 mm by 300 mm) or larger.
5. Tile floors composed of rib-backed tiles.

D. Grout Joint Widths: Install the respective types of tile with the following grout joint widths, unless otherwise recommended by tiling and grout manufacturers.

1. Ceramic Mosaic Tile - Less than 6 sq in (3900 mm^2): 1/16 in (1.5 mm).
2. Paver Tile - 6 sq in (3900 mm^2) or More: 1/4 in (6 mm).
3. Quarry Tile - 6 sq in (3900 mm^2) or More: 1/4 in (6 mm).
4. Stone Tile: 1/4 in (6 mm).

E. Metal Trim: Install at locations indicated and where exposed edge of tile flooring meets carpet, wood, or other flooring that finishes flush with top of tile.

F. Grout Sealer: Apply grout sealer to cementitious grout joints in tile floors according to grout-sealer manufacturer's written instructions. As soon as grout sealer has penetrated grout joints, remove excess sealer and sealer from tile faces by wiping with soft cloth.

3.7 MOVEMENT JOINTS

A. Movement Joints, General: Installation Quality Standard: In accordance with TCNA Movement Joint Design Essentials EJ171 and as specified below.

B. Wall Joints: The following conditions shall not be grouted; install wall joint sealant and backer rod or backer tape:

1. Gypsum board assembly control joints.
2. Building expansion joints, unless scheduled for expansion joint cover.
3. Interior corners of tiled walls, including shower and bathtub walls.
4. Around substrates and tile at penetrations through tiled substrates.
5. At one side of changes in direction or plane of wall.
6. At joint closest and parallel to changes in substrates supporting tile between wall and floor.

C. Floor Joints:

1. General Requirements:

a. Where full coverage crack isolation membrane is not provided, continue construction, contraction (control), and expansion joints in building structure through tile work.
b. Isolate tile work that abuts a restraining structure or assembly.
c. When metal trim or sealant/backer is used for joint, width shall not be less than width of joint in building structure.
d. Tile shall not be placed over building expansion joints.

2. Schedule of Sealant Products and Locations:

    a. Latex-Portland Cement Grouted Floors: Install floor joint sealant with backer rod at horizontal joints in mortar and grout setting conditions.
    b. Epoxy Grouted Floors: Install chemical resistant floor joint sealant full depth without backer rod at horizontal joints in epoxy grout setting conditions.
    c. Epoxy Mortar and Grouted Floors: Install chemical resistant floor joint sealant full depth without backer rod at horizontal joints in epoxy mortar and grout setting conditions.

3. Interior Movement Joint Spacing: As indicated on Drawings and as specified below:

    a. Tile Exposed to Direct Sunlight or Moisture: 8 ft to 12 ft (2.4 m to 3.6 m) on center each way.
    b. Tile Not Exposed to Sunlight: 20 ft to 25 ft (6 m to 7.5 m) on center each way.

D. Interior Floor Joint Installation Schedule: Seal interior floor movement joints, as defined by TCNA, according to following schedule:

1. Construction Joints: Floor joint sealant and backer rod.
2. Contraction (Control) Joints: Floor joint sealant and backer rod.
3. Isolation Joints: Floor joint sealant and backer rod.
4. Tile Expansion Joints: Floor joint sealant and backer rod.
5. Perimeter Joints between Wall and Floors: Floor joint sealant with backer tape.

3.8 FIELD QUALITY CONTROL

A. Manufacturer's Field Service: Manufacturer's qualified technical representative shall periodically inspect Work to ensure installation is proceeding in accordance with manufacturer's designs, recommendations, instructions, and warranty requirements. Representative shall submit written reports of each visit indicating observations, findings, and conclusions of inspection.

1. Manufacturer's Technical Representative Qualifications: Direct employee of technical services department of manufacturer with experience in providing recommendations, observations, evaluations, and problem diagnostics.

3.9 TESTING

A. Shower Receptor Test: Where shower floors and receptors are made water-tight by the application of the waterproof membrane, the completed membrane installation shall be tested at each installation.

1. The pipe from the shower drain shall be plugged and the receptor area shall be filled with water to a depth of not less than 2 in (50 mm) measured at the threshold.
2. Where a threshold of adequate height does not exist a temporary threshold shall be constructed to retain the test water to the stated depth.
3. The water shall be retained for a test period of not less than 24 hours, and there shall not be evidence of leakage.
4. Report results of tests, both successful and unsuccessful. In addition to results, report shall include date of test, project name, list of products being applied and tested, name of applicator, name of Contractor, and conditions causing failure of waterproofing membrane in event of an unsuccessful test.

5. Materials and installations failing to meet specified requirements shall be replaced at Contractor's expense. Retesting of materials and installations failing to meet specified requirements shall be done at Contractor's expense

3.10 CLEANING

A. Cleaning:

1. Acids are not permitted, nor will they be allowed.
2. Clean tile surfaces so they are free of foreign matter.
3. Remove grout residue from tile as soon as possible.
4. No sooner than 10 days after installation, clean grout smears and haze from tile according to tile and grout manufacturer's written instructions. Use only cleaners recommended by tile and grout manufacturers and only after determining that cleaners are safe to use by testing on samples of tile and other surfaces to be cleaned.
5. Protect metal surfaces and plumbing fixtures from effects of cleaning.
6. Flush surfaces with clean water before and after cleaning.
7. Remove temporary protective coating by method recommended by coating manufacturer that is acceptable to tile and grout manufacturer. Trap and remove coating to prevent it from clogging drains.

3.11 DEMONSTRATION

A. Cleaning and Maintenance Training: Provide instruction to Owner's personnel for cleaning and maintenance of installed work, including methods and frequency for maintaining optimum condition under anticipated use; include precautions against cleaning materials and methods which may be detrimental to finishes and performance.

3.12 PROTECTION

A. Coverings: When recommended by tile manufacturer, apply coat of neutral protective cleaner to completed tile walls and floors. Protect installed tile work with kraft paper or other heavy covering during construction period to prevent staining, damage, and wear. Before final inspection, remove protective coverings and rinse neutral cleaner from tile surfaces.

B. Traffic Restrictions: Prohibit foot and wheel traffic from tiled floors for at least 7 days after grouting is completed.

3.13 INTERIOR TILE INSTALLATION SCHEDULE

A. Floors, Concrete Substrate - Recessed:

1. TCNA Installation Method F111 (Cleavage Membrane) at Slabs-on-Grade: Thick-set reinforced Portland cement mortar bed over cleavage membrane over concrete subfloor; Latex-Portland Cement Grout.
2. TCNA Installation Method F121 (Waterproof Membrane) at Elevated Slabs: Thick-set reinforced Portland cement mortar bed over waterproof membrane over concrete subfloor; Latex-Portland Cement Grout.

B. Floors, Kitchens, and Food Service Areas, Concrete Substrate - Recessed:

1. TCNA Installation Method F114 (Cleavage Membrane) at Slabs-on-Grade: Thick-set reinforced Portland cement mortar bed over cleavage membrane over concrete subfloor; Epoxy Grout.
2. TCNA Installation Method F114 (Waterproof Membrane) at Elevated Slabs: Thick-set reinforced Portland cement mortar bed over waterproof membrane over concrete subfloor; Epoxy Grout.

C. Floors, Kitchens, and Food Service Areas, Concrete Substrate - LHT Mortar:

1. TCNA Installation Method F115 (Cleavage Membrane) at Slabs-on-Grade: Latex-Portland cement mortar bond coat over concrete sublfoor; Epoxy Grout.
2. TCNA Installation Method F115A (Waterproof Membrane) at Elevated Slabs: Latex-Portland cement mortar bond coat over concrete sublfoor; Epoxy Grout.

D. Floors, Concrete Substrate:

1. TCNA Installation Method F125-Full (Crack Isolation Membrane; full coverage): Thin-set Latex-Portland cement mortar over crack isolation membrane over concrete subfloor; Latex-Portland Cement Grout.

    a. Location: Where scheduled in the Room Finish Schedule located on the drawings and in all thin-set tile locations which have neither waterproofing nor sound isolation scheduled.

2. TCNA Installation Method F125-Partial (Crack Isolation Membrane; coverage only at visible cracks in substrate): Thin-set Latex-Portland cement mortar over crack isolation membrane over concrete subfloor; Latex-Portland Cement Grout.

    a. Location: Where scheduled in the Room Finish Schedule located on the drawings and in all thin-set tile locations which have neither waterproofing nor sound isolation scheduled.

3. TCNA Installation Method F122 (Waterproof Membrane): Thin-set Latex-Portland cement mortar over waterproof membrane over concrete subfloor; Latex-Portland Cement Grout.

    a. Location: As scheduled in the Room Finish Schedule located on the drawings.

4. TCNA Installation Method F122 (Sound Isolation Membrane): Thin-set Latex-Portland cement mortar over sound isolation membrane over concrete subfloor; Latex-Portland Cement Grout.

    a. Location: As scheduled in the Room Finish Schedule located on the drawings.

E. Floors, Elevator Car, Cementitious Backer Unit Substrate:

1. TCNA Installation Method F144: Thin-set Epoxy mortar over cementitious backer unit; Epoxy Grout.

F. Walls, Gypsum Board Substrate:

1. TCNA Installation Method W243: Thin-set Latex-Portland cement mortar over coated-glass-mat gypsum board; Latex-Portland Cement Grout.

G. Walls, Concrete or Masonry Substrate:

1. TCNA Installation Method W202: Thin-set Latex-Portland cement mortar over concrete or masonry; Latex-Portland Cement Grout.

H. Walls, Gypsum Board Substrate, Bathtub / Shower Surfaces:

1. Walls, Including Tub Unit or Pre-Fabricated Shower Receptors: TCNA Installation Method B419 (Waterproof Membrane): Thin-set Latex-Portland cement mortar over waterproof membrane over coated-glass-mat gypsum board; Latex-Portland Cement Grout.
2. Shower Receptors: TCNA Installation Method B420 (Waterproof Membrane): Thin-set Latex-Portland cement mortar over waterproof membrane over coated-glass-mat gypsum board walls and concrete subfloors; Latex-Portland Cement Grout.

3.14 TILE FINISH SCHEDULE

A. See Interior Finish Legend on the drawings.

END OF SECTION

SECTION 09 5113

ACOUSTICAL PANEL CEILINGS

PART 1 - GENERAL

1.1 SUMMARY

A. Section Includes: Acoustical lay-in ceiling panels, exposed metal suspension systems, and supplementary items necessary for installation.

1.2 ACTION SUBMITTALS

A. Product Data: Manufacturer's technical literature for each product and system indicated.

1. Include manufacturer's specifications for materials, finishes, construction details, installation instructions, and recommendations for maintenance.

B. Product Schedule: Use same designations indicated on the Finish Schedule and Drawings.

C. Samples for Verification Purposes: Full-size units of each type of ceiling assembly indicated; in sets for each color, texture, and pattern specified, showing the full range of variations expected in these characteristics.

1. Acoustical Panels: Set of 6 in (150 mm) square samples of each type, color, pattern, and texture.
2. Exposed Suspension-System Members, Moldings, and Trim: Set of 12 in (300 mm) long samples of each type, finish, and color.

1.3 INFORMATIONAL SUBMITTALS

A. Product Test Reports: Written reports based on evaluation of comprehensive tests performed by qualified testing agency indicating that each product complies with requirements.

1.4 CLOSEOUT SUBMITTALS

A. Maintenance Data: To include in maintenance manuals.

1.5 MAINTENANCE MATERIAL SUBMITTALS

A. Extra Materials: Furnish the following extra materials that match and are from same production runs as products installed, packaged with protective covering for storage and identified with labels describing contents:

1. Acoustical Ceiling Panels: Full-size units equal to 2 percent of amount installed.
2. Suspension System Components: Quantity of each exposed component equal to 2 percent of amount installed.

1.6 QUALITY ASSURANCE

A. Manufacturer Qualifications: Manufacturer with not less than 5 years of experience in the

successful production and in-service performance of products and systems similar to scope of this Project.

1.7 PRE-INSTALLATION CONFERENCE

A. Pre-Installation Conference: Before Work begins, conduct conference at Project site.

1.8 DELIVERY, STORAGE, AND HANDLING

A. Deliver acoustical panels, suspension-system components, and accessories to Project site in original, unopened packages and store them in a fully enclosed, conditioned space where they will be protected against damage from moisture, humidity, temperature extremes, direct sunlight, surface contamination, and other causes.

B. Before installing acoustical panels, permit them to reach room temperature and stabilized moisture content.

C. Handle acoustical panels carefully to avoid chipping edges or damaging units in any way.

1.9 PROJECT CONDITIONS

A. Environmental Limitations: Do not install acoustical panel ceilings until spaces are enclosed and weatherproof, wet-work in spaces is complete and dry, work above ceilings is complete, and ambient temperature and humidity conditions are maintained at the levels indicated for Project when occupied for its intended use.

1.10 COORDINATION

A. Coordinate installation of products and systems with interfacing and adjoining construction to provide a successful installation without failure.

PART 2 - PRODUCTS

2.1 MANUFACTURERS

A. Acceptable Manufacturers: Subject to compliance with requirements of Contract Documents as judged by the Architect, provide product by one of manufacturers listed. If not listed, submit as substitution according to the Conditions of the Contract and Division 01 Section "Substitution Procedures".

1. Armstrong World Industries, Inc.
2. CertainTeed Corporation.
3. Chicago Metallic Corporation.
4. USG Interiors, Inc.; Subsidiary of USG Corporation.

B. Basis of Design (Product Standard): Contract Documents are based on products and systems specified to establish a standard of quality. Other manufacturers offering products having equivalent characteristics may be considered, provided deviations are minor and comply with requirements of Contract Documents as judged by the Architect.

2.2 MATERIALS, GENERAL

A. Single Source Responsibility: Furnish each type of product from single manufacturer. Provide secondary materials only as recommended by manufacturer of primary materials.

1. Obtain both acoustical ceiling panels and suspension system from the same manufacturer if both are offered by the manufacturer.

2.3 PERFORMANCE REQUIREMENTS

A. General Performance: Products and systems shall be engineered to withstand loads within limits of allowable working stresses of the materials involved under conditions indicated and without permanent deformation or failure of materials.

B. Surface-Burning Characteristics: Comply with ASTM E 84; testing by a qualified testing agency. Identify products with appropriate markings of applicable testing agency.

1. Flame-Spread Index: Comply with ASTM E 1264 for Class A materials.
2. Smoke-Developed Index: 450 or less.

C. Seismic Standards: Provide acoustical panel ceilings designed and installed to withstand the effects of earthquake motions according to the following:

1. Standard for Ceiling Suspension Systems Requiring Seismic Restraint: Comply with ASTM E 580.
2. CISCA's Recommendations for Acoustical Ceilings: Comply with CISCA's "Recommendations for Direct-Hung Acoustical Tile and Lay-in Panel Ceilings-Seismic Zones 0-2".
3. ASCE 7, "Minimum Design Loads for Buildings and Other Structures": Section 9, "Earthquake Loads".

2.4 ACOUSTICAL PANELS, GENERAL

A. Acoustical Panel Standard: Provide manufacturer's standard panels of configuration indicated that comply with ASTM E 1264 classifications as designated by types, patterns, acoustical ratings, and light reflectance's, unless otherwise indicated.

1. Selections: As scheduled or as indicated in Design Selections.

2.5 METAL SUSPENSION SYSTEMS, GENERAL

A. Metal Suspension System Standard: Provide manufacturer's standard direct-hung metal suspension systems of types, structural classifications, and finishes indicated that comply with applicable requirements in ASTM C 635/C 635M.

B. Finishes and Colors, General: Comply with NAAMM's "Metal Finishes Manual for Architectural and Metal Products" for recommendations for applying and designating finishes. Provide manufacturer's standard factory-applied finish for type of system indicated.

1. High-Humidity Finish: Comply with ASTM C 635/C 635M requirements for "Coating Classification for Severe Environment Performance" where high-humidity finishes are indicated.

C. Attachment Devices: Size for five times design load indicated in ASTM C 635/C 635, Table 1, "Direct Hung", unless otherwise indicated.

1. Comply with seismic design requirements.
2. Anchors in Concrete: Anchors of type and material indicated below, with holes or loops for attaching hangers and with capability to sustain, without failure, a load equal to five times that imposed by ceiling construction, as determined by testing per ASTM E 488/E 488M or ASTM E 1512 as applicable, conducted by a qualified testing and inspecting agency.

    a. Cast-in-place anchors, designed for attachment to concrete.
    b. Post-installed expansion anchors.
    c. Corrosion Protection: Carbon-steel components zinc plated to comply with ASTM B 633, Class Fe/Zn 5 for Class SC1 service condition.

3. Powder-Actuated Anchors: Suitable for application indicated, ANSI A10.3; low velocity, powder-actuated fasteners; drive pins and clip angles fabricated from corrosion-resistant materials, with clips or other devices for attaching hangers of type indicated, and capable of sustaining, without failure, an ultimate load capacity not less than 10 times that imposed by construction as determined by testing according to ASTM E 1190 by a qualified independent testing agency.

    a. Manufacturers:

        1) Construction Materials, Inc.
        2) Heckman Building Products, Inc.
        3) Hilti Corp.
        4) ITW Ramset/Red Head.
        5) Powers Fasteners.
        6) Simpson Strong Tie Anchor Systems.

4. For post-tensioned concrete, anchors shall not exceed 1 in (25 mm) embedment. Obtain Structural Engineer's written approval for all proposed anchors in post-tensioned concrete prior to installation.

D. Wire Hangers, Braces, and Ties: Provide wires complying with the following requirements:

1. Wire:

    a. Zinc-Coated Carbon-Steel Wire: ASTM A 641 / A 641M, Class 1 zinc coating, soft temper.
    b. Stainless-Steel Wire: ASTM A 580/A 580M, Type 304, nonmagnetic; for use at MRI and related spaces.

2. Size: Select wire diameter so its stress at 3 times hanger design load (ASTM C 635/C 635M, Table 1, "Direct Hung") will be less than yield stress of wire, but provide not less than 0.106 in (2.69 mm) diameter wire.

E. Stabilizer Bars: Manufacturer's standard perimeter stabilizers designed to accommodate seismic forces and complying with requirements of authorities having jurisdiction or as recommended by manufacturer.

F. Seismic Struts: Manufacturer's standard compression struts designed to accommodate seismic

forces and complying with requirements of authorities having jurisdiction.

G. Seismic Clips: Manufacturer's standard seismic clips designed and spaced to secure acoustical panels in-place and complying with requirements of authorities having jurisdiction.

H. Edge Moldings and Trim: Manufacturer's standard moldings for edges and penetrations that fit acoustical panel edge details and suspension systems indicated; formed from sheet metal of same material and finish as that used for exposed flanges of suspension system runners.

1. For lay-in panels with reveal edge details, provide stepped edge molding that forms reveal of same depth and width as that formed between edge of panel and flange at exposed suspension member.

I. Wide-Face, Capped, Double-Web, Stainless Steel Suspension System: Main and cross runners roll formed from cold-rolled Type 304 or 316 non-magnetic stainless steel sheet, standard of manufacturer, with 15/16 in (24 mm) wide polished stainless steel caps on flanges.

1. Structural Classification: Intermediate-duty system.
2. End Condition of Cross Runners: Override (stepped) type.
3. Face Design: Flush face.
4. Cap Material: Polished stainless steel sheet.
5. Manufacturers and Products:

a. Armstrong World Industries, Inc.; SS Prelude Plus XL.
b. Chicago Metallic Corporation; 730 System - All Stainless Steel.
c. USG Interiors, Inc.; Donn DXSS.

PART 3 - EXECUTION

3.1 EXAMINATION

A. Acceptance of Surfaces and Conditions: Examine substrates to receive products and systems and associated work for compliance with requirements and other conditions affecting performance. Proceed only when unsatisfactory conditions have been corrected in a manner complying with Contract Documents. Starting work within a particular area will be construed as acceptance of surface conditions.

3.2 INSTALLATION, GENERAL

A. Installation Quality Standards: In addition to standards listed elsewhere, perform Work according to following, unless otherwise specified:

1. ASTM C 636 / C 636M.
2. Respective manufacturer’s written installation instructions.
3. Accepted submittals.
4. Contract Documents.

B. Control of Corrosion: Prevent galvanic action and other forms of corrosion by isolating metals and other materials from direct contact with incompatible materials.

3.3 PREPARATION

A. General: Comply with manufacturer's instructions, recommendations, and specifications for cleaning and surface preparation. Surfaces shall have no defects, contaminants, or errors which would result in poor or potentially defective installation or would cause latent defects in Work.

B. Coordination: Furnish layouts for cast-in-place anchors, clips, and other ceiling anchors. Furnish cast-in-place anchors and similar devices to other trades for installation well in advance of time needed for coordinating other work.

C. Measure each ceiling area and establish layout of acoustical panels to balance border widths at opposite edges of each ceiling. Avoid using less-than-half-width panels at borders, and comply with layout shown on reflected ceiling plans.

3.4 INSTALLATION OF ACOUSTICAL PANEL CEILINGS

A. Suspend ceiling hangers from building's structural members and as follows:

1. Install hangers plumb and free from contact with mechanical and electrical equipment, insulation, or other objects within ceiling plenum that are not part of supporting structural frame or ceiling suspension system. Within limitations allowed by installation quality standards, splay hangers only where required to miss obstructions and offset resulting horizontal forces by bracing, countersplaying, or other equally effective means.
2. Where width of ducts and other construction within ceiling plenum produces hanger spacings that interfere with location of hangers at spacings required to support standard suspension system members, install supplemental suspension members and hangers in form of trapezes or equivalent devices. Size supplemental suspension members and hangers to support ceiling loads within performance limits established by installation quality standards.
3. Secure wire hangers to ceiling suspension members and to supports above with a minimum of three tight turns. Connect hangers directly either to structures or to inserts, eye screws, or other devices that are secure and appropriate for substrate and that will not deteriorate or otherwise fail due to age, corrosion, or elevated temperatures.
4. Do not support ceilings directly from permanent metal forms. Fasten hangers to cast-in-place hanger inserts, power-actuated fasteners, or drilled-in anchors that extend through forms into concrete.
5. Do not attach hangers to steel deck tabs.
6. Do not attach hangers to steel roof deck. Attach hangers to structural members.
7. Space hangers not more than 48 in (1200 mm) on center along each member supported directly from hangers, unless otherwise indicated; and provide hangers not more than 8 in (200 mm) from ends of each member.
8. Do not connect or suspend any ceiling components from ducts, pipes or conduit.
9. Do not make local kinks or bends in hanger wires as a means of leveling.

B. Install edge moldings and trim at perimeter of acoustical ceiling area and where necessary to conceal edges of acoustical panels.

1. Apply acoustical sealant in a continuous ribbon concealed on back of vertical legs of moldings before they are installed.
2. Screw attach moldings to substrate at intervals not more than 16 in (400 mm) on center and not more than 3 in (75 mm) from ends, leveling with ceiling suspension system to a tolerance of 1/8 in per 12 ft (3 mm per 3.6 m). Miter corners accurately and connect

securely.
3. Do not use exposed fasteners, including pop rivets, on moldings and trim.
4. Provide control joints where joints occur in abutting surfaces.
5. Hold tees in place with concealed clips.

C. Install suspension system runners so they are square and securely interlocked with one another. Remove and replace dented, bent, or kinked members.

1. Space steel main runners at 48 in (1200 mm) on center.
2. Space aluminum main runners at 24 in (600 mm) on center.

D. Install acoustical panels with undamaged edges and fitted accurately into suspension system runners and edge moldings. Scribe and cut panels at borders and penetrations to provide a neat, precise fit.

1. Arrange directionally patterned acoustical panels with pattern running in one direction parallel to long axis of space.
2. For square-edged panels, install panels with edges fully hidden from view by flanges of suspension system runners and moldings.
3. For reveal-edged panels on suspension system runners, install panels with bottom of reveal in firm contact with top surface of runner flanges.
4. For reveal-edged panels on suspension system members with box-shaped flanges, install panels with reveal surfaces in firm contact with suspension system surfaces and panel faces flush with bottom face of runners.
5. Paint cut panel edges remaining exposed after installation; match color of exposed panel surfaces using coating recommended in writing for this purpose by acoustical panel manufacturer.

3.5 PROTECTION

A. Protect products and systems from damage during installation and remainder of construction period according to manufacturer's instructions.

3.6 CLEANING

A. Clean exposed surfaces of acoustical panel ceilings, including trim, edge moldings, and suspension system members. Comply with manufacturer's written instructions for cleaning and touchup of minor finish damage. Remove and replace ceiling components that cannot be successfully cleaned and repaired to permanently eliminate evidence of damage.

3.7 ACOUSTICAL PANEL CEILING SCHEDULE

A. See Interior Finish Legend on drawings.:

END OF SECTION

SECTION 09 6115

CONCRETE FLOOR SEALER

PART 1 - GENERAL

1.1 SUMMARY

A. Work required of this Section includes sealing of exposed interior concrete floors as a finished floor material along with supplementary items necessary to complete work required for their installation.

B. Related Section:

1. Division 03 Section ‘‘Concrete Finishing’’ for other floor sealers and curing agents not used as interior finish flooring.

1.2 ACTION SUBMITTALS

A. Product Data: Manufacturer's technical literature for each product and system indicated.

1. Include manufacturer's specifications for materials, instructions for evaluating, preparing, and treating the substrate, installation instructions, and recommendations for maintenance.

1.3 INFORMATIONAL SUBMITTALS

A. Qualification Data:

1. For firms and persons specified in "Quality Assurance" to demonstrate their capabilities and experience. Include list of completed projects.

1.4 CLOSEOUT SUBMITTALS

A. Maintenance Data: Submit to include in manual specified in Division 01 Section "Closeout Procedures". Include recommendations for periodic inspections, cleaning, care, maintenance, and repair of coatings.

1.5 QUALITY ASSURANCE

A. Manufacturer Qualifications: Manufacturer with not less than 2 years of experience in the successful production and in-service performance of products and systems similar to scope of this Project.

B. Mockups: Provide a full-coat benchmark finish sample. Select one room or surface, not less than 100 square feet, to represent surfaces and conditions for application of coating and substrate. Apply sealer materials according to requirements for the completed Work, after permanent lighting and other environmental services have been activated. After finish is accepted, the room or surface will be used to evaluate coatings of remainder of work.

1.6 PROJECT CONDITIONS

A. Environmental Conditions: Apply sealer materials within the range of ambient and substrate temperatures recommended by the manufacturer. Do not apply to a damp or wet substrate, when relative humidity exceeds 85 percent, or when temperatures are less than 5 deg F above dew point.

1.7 COORDINATION

A. Coordinate installation of products and systems with interfacing and adjoining construction to provide a successful installation without failure.

PART 2 - PRODUCTS

2.1 MANUFACTURERS

A. Acceptable Manufacturers and Products: Subject to compliance with requirements of Contract Documents as judged by the Architect, provide product by one of manufacturers listed. If not listed, submit as substitution according to the Conditions of the Contract and Division 01 Section "Substitution Procedures".

B. Available Manufacturers and Products: Subject to compliance with requirements of Contract Documents as judged by the Architect, manufacturers offering products that may be incorporated into Work include but are not limited to those listed.

2.2 MATERIALS, GENERAL

A. Single Source Responsibility: Furnish each type of product from single manufacturer. Provide secondary materials only as recommended by manufacturer of primary materials.

2.3 SEALING COMPOUND

A. Clear, Waterborne, Membrane-Forming Curing and Sealing Compound: ASTM C 1315, Type 1, Class A.

1. Manufacturers and Products:

    a. Burke by Edoco; Cureseal 1315 WB.
    b. ChemMasters; Polyseal WB.
    c. Conspec Marketing & Manufacturing Co., Inc., a Dayton Superior Company; Sealcure 1315 WB.
    d. Euclid Chemical Company (The); Super Diamond Clear VOX.
    e. Kaufman Products, Inc.; Sure Cure 25 Emulsion.
    f. Lambert Corporation; UV Safe Seal.
    g. L&M Construction Chemicals, Inc.; Lumiseal WB Plus.
    h. Meadows, W. R., Inc.; Vocomp-30.
    i. Metalcrete Industries; Metcure 30.
    j. Symons Corporation, a Dayton Superior Company; Cure & Seal 31 Percent E.
    k. Tamms Industries, Inc.; LusterSeal WB 300.
    l. Unitex; Hydro Seal 25.
    m. US Mix Products Company; US Spec Radiance UV-25.
    n. Vexcon Chemicals, Inc.; Vexcon Starseal 1315.

PART 3 - EXECUTION

3.1 EXAMINATION

A. Acceptance of Surfaces and Conditions: Examine substrates to receive products and systems and associated work for compliance with requirements and other conditions affecting performance. Proceed only when unsatisfactory conditions have been corrected in a manner complying with Contract Documents. Starting work within a particular area will be construed as acceptance of surface conditions.

1. Do not proceed with application until after the minimum concrete curing period recommended by coating manufacturer.
2. Verify substrate is visibly dry and free of moisture.

3.2 INSTALLATION, GENERAL

A. Installation Quality Standards: In addition to standards listed elsewhere, perform Work according to following, unless otherwise specified:

1. Respective manufacturer written installation instructions.
2. Accepted submittals.
3. Contract Documents.

3.3 SURFACE PREPARATION

A. General: Comply with manufacturer's instructions, recommendations, and specifications for cleaning and surface preparation. Surfaces shall have no defects, contaminants, or errors which would result in poor or potentially defective installation or would cause latent defects in Work.

B. Mask off adjoining surfaces not being sealed and close off drains and other penetrations to prevent spillage and migration of liquids.

C. Remove grease, oil, paints, or other penetrating contaminants from concrete. Remove concrete fins, ridges, or other projections. Remove material to provide a sound surface free of laitance, glaze, or efflorescence. Remove remaining loose material and clean surfaces according to ASTM D 4258.

3.4 APPLICATION

A. General: Apply materials according to respective manufacturer's instructions, approved submittals and Contract Documents.

B. Sealer: Apply by spray, roller, or other applicators according to manufacturer's recommended coverage rate.

END OF SECTION

SECTION 09 6115

CONCRETE FLOOR SEALER

PART 1 - GENERAL

1.1 SUMMARY

A. Work required of this Section includes sealing of exposed interior concrete floors as a finished floor material along with supplementary items necessary to complete work required for their installation.

B. Related Section:

1. Division 03 Section ‘‘Concrete Finishing’’ for other floor sealers and curing agents not used as interior finish flooring.

1.2 ACTION SUBMITTALS

A. Product Data: Manufacturer's technical literature for each product and system indicated.

1. Include manufacturer's specifications for materials, instructions for evaluating, preparing, and treating the substrate, installation instructions, and recommendations for maintenance.

1.3 INFORMATIONAL SUBMITTALS

A. Qualification Data:

1. For firms and persons specified in "Quality Assurance" to demonstrate their capabilities and experience. Include list of completed projects.

1.4 CLOSEOUT SUBMITTALS

A. Maintenance Data: Submit to include in manual specified in Division 01 Section "Closeout Procedures". Include recommendations for periodic inspections, cleaning, care, maintenance, and repair of coatings.

1.5 QUALITY ASSURANCE

A. Manufacturer Qualifications: Manufacturer with not less than 2 years of experience in the successful production and in-service performance of products and systems similar to scope of this Project.

B. Mockups: Provide a full-coat benchmark finish sample. Select one room or surface, not less than 100 square feet, to represent surfaces and conditions for application of coating and substrate. Apply sealer materials according to requirements for the completed Work, after permanent lighting and other environmental services have been activated. After finish is accepted, the room or surface will be used to evaluate coatings of remainder of work.

1.6 PROJECT CONDITIONS

A. Environmental Conditions: Apply sealer materials within the range of ambient and substrate temperatures recommended by the manufacturer. Do not apply to a damp or wet substrate, when relative humidity exceeds 85 percent, or when temperatures are less than 5 deg F above dew point.

1.7 COORDINATION

A. Coordinate installation of products and systems with interfacing and adjoining construction to provide a successful installation without failure.

PART 2 - PRODUCTS

2.1 MANUFACTURERS

A. Acceptable Manufacturers and Products: Subject to compliance with requirements of Contract Documents as judged by the Architect, provide product by one of manufacturers listed. If not listed, submit as substitution according to the Conditions of the Contract and Division 01 Section "Substitution Procedures".

B. Available Manufacturers and Products: Subject to compliance with requirements of Contract Documents as judged by the Architect, manufacturers offering products that may be incorporated into Work include but are not limited to those listed.

2.2 MATERIALS, GENERAL

A. Single Source Responsibility: Furnish each type of product from single manufacturer. Provide secondary materials only as recommended by manufacturer of primary materials.

2.3 SEALING COMPOUND

A. Clear, Waterborne, Membrane-Forming Curing and Sealing Compound: ASTM C 1315, Type 1, Class A.

1. Manufacturers and Products:

    a. Burke by Edoco; Cureseal 1315 WB.
    b. ChemMasters; Polyseal WB.
    c. Conspec Marketing & Manufacturing Co., Inc., a Dayton Superior Company; Sealcure 1315 WB.
    d. Euclid Chemical Company (The); Super Diamond Clear VOX.
    e. Kaufman Products, Inc.; Sure Cure 25 Emulsion.
    f. Lambert Corporation; UV Safe Seal.
    g. L&M Construction Chemicals, Inc.; Lumiseal WB Plus.
    h. Meadows, W. R., Inc.; Vocomp-30.
    i. Metalcrete Industries; Metcure 30.
    j. Symons Corporation, a Dayton Superior Company; Cure & Seal 31 Percent E.
    k. Tamms Industries, Inc.; LusterSeal WB 300.
    l. Unitex; Hydro Seal 25.
    m. US Mix Products Company; US Spec Radiance UV-25.
    n. Vexcon Chemicals, Inc.; Vexcon Starseal 1315.

PART 3 - EXECUTION

3.1 EXAMINATION

A. Acceptance of Surfaces and Conditions: Examine substrates to receive products and systems and associated work for compliance with requirements and other conditions affecting performance. Proceed only when unsatisfactory conditions have been corrected in a manner complying with Contract Documents. Starting work within a particular area will be construed as acceptance of surface conditions.

1. Do not proceed with application until after the minimum concrete curing period recommended by coating manufacturer.
2. Verify substrate is visibly dry and free of moisture.

3.2 INSTALLATION, GENERAL

A. Installation Quality Standards: In addition to standards listed elsewhere, perform Work according to following, unless otherwise specified:

1. Respective manufacturer written installation instructions.
2. Accepted submittals.
3. Contract Documents.

3.3 SURFACE PREPARATION

A. General: Comply with manufacturer's instructions, recommendations, and specifications for cleaning and surface preparation. Surfaces shall have no defects, contaminants, or errors which would result in poor or potentially defective installation or would cause latent defects in Work.

B. Mask off adjoining surfaces not being sealed and close off drains and other penetrations to prevent spillage and migration of liquids.

C. Remove grease, oil, paints, or other penetrating contaminants from concrete. Remove concrete fins, ridges, or other projections. Remove material to provide a sound surface free of laitance, glaze, or efflorescence. Remove remaining loose material and clean surfaces according to ASTM D 4258.

3.4 APPLICATION

A. General: Apply materials according to respective manufacturer's instructions, approved submittals and Contract Documents.

B. Sealer: Apply by spray, roller, or other applicators according to manufacturer's recommended coverage rate.

END OF SECTION

SECTION 09 6500

RESILIENT FLOORING

PART 1 - GENERAL

1.1 SUMMARY

A. Section Includes: Resilient flooring products and systems and supplementary items necessary for installation.

B. Related Section:

1. Resilient wall base, reducer strips, and other accessories installed with resilient flooring are specified in Division 09 Section "Resilient Base and Accessories".

1.2 ALLOWANCES

A. Concrete Moisture Barrier Allowance: Include allowance to provide Concrete Moisture Barrier Floor Treatment to concrete floor decks.

1.3 ACTION SUBMITTALS

A. Product Data: Manufacturer's technical literature for each product and system indicated.

1. Include manufacturer's specifications for materials, finishes, construction details, installation instructions, and recommendations for maintenance.

B. Shop Drawings for Special Patterns: Show layout and details of special patterns for resilient flooring.

C. Product Schedule: Use same designations indicated on the Finish Schedule and Drawings.

D. Samples for Verification Purposes: In manufacturer's standard size, but not less than 6 in by 9 in (150 mm by 230 mm) sample of each different color and pattern of resilient flooring product specified, showing the full range of variations expected in these characteristics. Label each sample with manufacturer's name, material description, color, pattern, and designation indicated on Drawings and in Schedules.

1. Heat-Welded Sheet Flooring: For heat-welding bead, manufacturer's standard-size samples, but not less than 9 in (225 mm) long, of each color specified.
2. Seam Samples for Sheet Flooring: For each color and pattern of resilient sheet flooring product required; with seam running lengthwise and in center of 6 in by 9 in (150 mm by 230 mm) sample applied to a rigid backing and prepared by installer for this Project.

1.4 INFORMATIONAL SUBMITTALS

A. Product Test Reports: Written reports based on evaluation of comprehensive tests performed by qualified testing agency indicating that each product complies with requirements.

B. Manufacturer's Project Acceptance Document: Certification by the manufacturer that its product(s) are approved, acceptable, suitable for use in specific locations, for specific details, and for applications indicated, specified, or required.

1.5 CLOSEOUT SUBMITTALS

A. Maintenance Instructions: Include in operation and maintenance manual as required by Division 01 Section "Closeout Procedures". Submit manufacturer's instructions for **maintenance of installed work, including methods and frequency for maintaining optimum condition under anticipated use. Include precautions against cleaning materials and methods which may be detrimental to finishes and performance.**

1.6 MAINTENANCE MATERIAL SUBMITTALS

A. Extra Materials: Furnish the following extra materials that match and are from same production runs as products installed, packaged with protective covering for storage and identified with labels describing contents:

1. Resilient Tile Flooring: Furnish not less than 1 box for each 50 boxes or fraction thereof, of each type, color, pattern, class, wearing surface, and size of tile flooring product installed.
2. Resilient Sheet Flooring: Furnish not less than 10 linear ft (3 linear m) in roll form and full roll width, for each 500 linear ft (150 linear m) or fraction thereof, of each color, pattern, and type of sheet flooring product installed.

1.7 QUALITY ASSURANCE

A. Manufacturer Qualifications: Manufacturer with not less than 5 years of experience in the successful production and in-service performance of products and systems similar to scope of this Project.

B. Slip Resistance: Provide products identical to those tested for slip resistance per ASTM D 2047 with a static coefficient of friction not less than 0.6 for level surfaces and 0.8 for ramped surfaces.

C. Fire-Test-Response Characteristics: Provide products with the following fire-test-response characteristics as determined by testing identical products per test method indicated below by a testing and inspecting agency acceptable to authorities having jurisdiction.

1. Critical Radiant Flux: Class I, 0.45 W/sq. cm or greater when tested per ASTM E 648.
2. Smoke Density: Maximum specific optical density of 450 or less when tested per ASTM E 662.

1.8 PRE-INSTALLATION CONFERENCE

A. Pre-Installation Conference: Before Work begins, conduct conference at Project site.

1.9 DELIVERY, STORAGE, AND HANDLING

A. Store flooring products and installation materials in dry spaces protected from the weather, with ambient temperatures maintained within range recommended by manufacturer, but not less than 50 deg F (10 deg C) or more than 90 deg F (32 deg C).

1. Resilient Tile Flooring: Store floor tiles on flat surfaces.
2. Resilient Sheet Flooring: Store sheet flooring rolls upright.

1.10 PROJECT CONDITIONS

A. Maintain a temperature of not less than 70 deg F (21 deg C) or more than 85 deg F (29 deg C) in spaces to receive products for at least 48 hours before installation, during installation, and for at least 48 hours after installation, unless otherwise recommended by manufacturer.

B. Maintain flooring products prior to installation at the same temperature as the space where they are to be installed.

C. Close spaces to traffic during flooring installation and for time period after installation recommended by manufacturer.

D. Install flooring products after other finishing operations, including painting, have been completed.

E. Do not install flooring over concrete substrates until slabs have cured and are sufficiently dry to bond with adhesive, as determined by flooring manufacturer's recommended tests. Refer to "Preparation" Article for requirements.

1.11 COORDINATION

A. Coordinate installation of products and systems with interfacing and adjoining construction to provide a successful installation without failure.

PART 2 - PRODUCTS

2.1 MANUFACTURERS

A. Acceptable Manufacturers: Subject to compliance with requirements of Contract Documents as judged by the Architect, provide product by one of manufacturers listed. If not listed, submit as substitution according to the Conditions of the Contract and Division 01 Section "Substitution Procedures".

1. Vinyl Flooring:

    a. Altro Group.
    b. Armstrong World Industries, Inc.
    c. Congoleum Corporation.
    d. Forbo Flooring, Inc.
    e. Gerflor, Architectural Floor Systems, Inc.
    f. Lonseal, Inc.
    g. Mannington Mills, Inc.
    h. Tarkett, Inc.

2. Rubber Flooring

    a. AB; American Biltrite.
    b. Flexco.
    c. Nora Systems, inc.

d. PRF USA, Inc.
e. R.C.A. Rubber Company (The).
f. VPI, LLC, Floor Products Division.

B. Basis of Design (Product Standard): Contract Documents are based on products and systems specified to establish a standard of quality. Other manufacturers offering products having equivalent characteristics may be considered, provided deviations are minor and comply with requirements of Contract Documents as judged by the Architect.

1. Selections: As scheduled or as indicated in Interior Finish Legend on drawings.

2.2 MATERIALS, GENERAL

A. Single Source Responsibility: Furnish each type of product from single manufacturer. Provide secondary materials only as recommended by manufacturer of primary materials.

2.3 RESILIENT TILE FLOORING MATERIALS

A. Vinyl Composition Floor Tile Standard: ASTM F 1066, Class 2, through-pattern tile, unless otherwise indicated.

1. Size: 12 in by 12 in by 0.125 in (300 mm by 300 mm by 3 mm).

B. Solid Vinyl Floor Tile Standard: ASTM F 1700, Class 1, monolithic vinyl tile, unless otherwise indicated.

1. Size: 12 in by 12 in by 0.125 in (300 mm by 300 mm by 3 mm).

C. Rubber Floor Tile: ASTM F 1344, Class I, unless otherwise indicated.

1. Size: 12 in by 12 in by 0.125 in (300 mm by 300 mm by 3 mm).

2.4 RESILIENT SHEET FLOORING MATERIALS

A. Vinyl Sheet Floor Coverings: ASTM F 1303, Type I or II, Grade 1, Class A (fibrous) or B (nonfoamed plastic) backing or ASTM F 1913 unbacked as required by product selection.

B. Rubber Sheet Floor Coverings: ASTM F 1859, Type I (homogeneous rubber sheet.

C. Sheet Flooring Thickness: 0.125 in (3 mm).

D. Heat-Welding Seam Bead: Solid-strand product of floor covering manufacturer for heat welding seams.

1. Selections: As scheduled or as indicated in Design Selections.

E. Integral Cove Base Accessories: Resilient accessories recommended by flooring manufacturer with selections as follows:

1. Basis of Design: Burke Mercer Flooring Products; Division of Burke Industries, Inc.

a. Cap Strip: No. 040 round vinyl cap.
b. Cove Strip: No. 070 flexible vinyl cove stick with nominal 1 in (25 mm) radius.

c. Reducer: No. 633 vinyl reducer, 1 in (25 mm) wide by 1/8 in (3 mm) high

2.5 ACCESSORY MATERIALS

A. Concrete Slab Primer: Non-staining type as recommended by flooring manufacturer.

B. Trowelable Leveling and Patching Compounds: Latex-modified, Portland-cement-based formulation provided or approved by flooring manufacturer for products and applications indicated.

C. Adhesives: Water-resistant type recommended by flooring manufacturer suitable for products, applications, and substrate conditions indicated.

1. Use adhesives that comply with the following limits for VOC content when calculated according to 40 CFR 59, Subpart D (EPA Method 24):

a. Typical Flooring: Not more than 50 g/L.
b. Rubber Flooring: Not more than 60 g/L.

D. Concrete Moisture Barrier Floor Treatment:

1. Epoxy-Based Moisture Barrier Floor Treatment: Two-component, high-performance, non-flammable, rapid drying, water based, low odor, low VOC, two-component, penetrating epoxy; formulated to reduce moisture vapor transmission and surface alkalinity from concrete substrates, including aged or freshly placed ("green") concrete, prior to installation of impervious glued-down finish flooring specified in other Division 09 sections.

a. Basis of Design (Product Standard): Bostik, Inc.; D-250.

PART 3 - EXECUTION

3.1 EXAMINATION

A. Acceptance of Surfaces and Conditions: Examine substrates to receive products and systems and associated work for compliance with requirements and other conditions affecting performance. Proceed only when unsatisfactory conditions have been corrected in a manner complying with Contract Documents. Starting work within a particular area will be construed as acceptance of surface conditions.

3.2 INSTALLATION, GENERAL

A. Installation Quality Standards: In addition to standards listed elsewhere, perform Work according to following, unless otherwise specified:

1. Respective manufacturer's written installation instructions.
2. Accepted submittals.
3. Contract Documents.

3.3 PREPARATION

A. General: Comply with manufacturer's instructions, recommendations, and specifications for cleaning and surface preparation. Surfaces shall have no defects, contaminants, or errors which would result in poor or potentially defective installation or would cause latent defects in Work.

B. Concrete Substrates: Prepare according to ASTM F 710.

1. Verify that concrete substrate finishes comply with requirements specified in Division 03 Section "Concrete Finishing" for concrete substrates receiving resilient flooring.
2. Verify that concrete substrates are free of cracks, ridges, depressions, scale, and foreign deposits.
3. Verify that concrete substrates are dry and free of curing compounds, sealers, hardeners, and other materials that may interfere with adhesive bond. Unless concrete has been water-cured, then proceed with the following:

    a. Bead-blast concrete substrate with an apparatus that abrades the surface, contains the dispensed shot within the apparatus, and recirculates the shot by vacuum pickup.
    b. Repair damaged and deteriorated concrete according to flooring manufacturer's written recommendations.

4. Determine adhesion and dryness characteristics by performing the following tests as recommended by flooring manufacturer.
5. Alkalinity and Adhesion Testing: Perform tests recommended by flooring manufacturer. A pH range of 5 to 9 is required when substrate is wetted with distilled water and pHydrion paper is applied. Proceed with installation only after concrete substrates pass testing.
6. Moisture Testing: Perform one or both of the following tests as recommended by flooring manufacturer. Perform 3 moisture tests for first 1000 sf (92.9 sm) of concrete substrate scheduled to receive flooring and 1 test for each additional 1000 sf (92.9 sm) or fraction thereof. Proceed with installation only after concrete substrates pass testing.

    a. Perform anhydrous calcium chloride test in accordance with ASTM F 1869. Proceed with installation only after concrete substrates have maximum moisture-vapor-emission rate of 3 lbs of water/1000 sf (1.36 kg of water/92.9 sm) in 24 hours.
    b. Perform relative humidity test using in situ probes in accordance with ASTM F 2170. Proceed with installation only after concrete substrates have a maximum 75 percent relative humidity level measurement.

7. Moisture Barrier Floor Treatment: For concrete substrates not meeting moisture test standards specified above, apply epoxy-based moisture floor treatment and cementitious overcoat to concrete substrate in accordance with manufacturer's written instructions.

C. Use trowelable leveling and patching compounds, according to manufacturer's written instructions, to fill cracks, holes, and depressions in substrates.

D. Broom and vacuum clean substrates to be covered immediately before flooring product installation. After cleaning, reexamine substrates for moisture, alkaline salts, carbonation, or dust. Do not proceed with installation until unsatisfactory conditions have been corrected.

3.4 INSTALLATION OF RESILIENT FLOORING, GENERAL

A. Apply concrete slab primer, if recommended by flooring manufacturer, prior to applying adhesive. Apply according to manufacturer's directions.

B. Scribe, cut, and fit flooring to butt neatly and tightly to vertical surfaces and permanent fixtures, including built-in furniture, cabinets, pipes, outlets, edgings, door frames, thresholds, and nosings.

C. Extend flooring into toe spaces, door reveals, closets, and similar openings. Extend flooring to center of door openings.

D. Maintain reference markers, holes, and openings that are in place or marked for future cutting by repeating on finish flooring as marked on substrate. Use chalk or other nonpermanent, non-staining marking device.

E. Adhere flooring to substrates using a full spread of adhesive applied to substrate to comply with flooring manufacturer's written instructions, including those for trowel notching, adhesive mixing, and adhesive open and working times.

1. Provide completed installation without open cracks, voids, raising and puckering at joints, telegraphing of adhesive spreader marks, and other surface imperfections.

F. Hand-roll flooring in both directions from center out to embed flooring in adhesive and eliminate trapped air according to manufacturer's written instructions. At walls, door casings, and other locations where access by roller is impractical, press flooring firmly in place with flat-bladed instrument.

3.5 INSTALLATION OF RESILIENT TILE FLOORING

A. Lay out tiles from center marks established with principal walls, discounting minor offsets, so tiles at opposite edges of room are of equal width. Adjust as necessary to avoid using cut widths that equal less than one-half of a tile at perimeter.

B. Match tiles for color and pattern by selecting tiles from cartons in the same sequence as manufactured and packaged, if so numbered. Cut tiles neatly around all fixtures. Discard broken, cracked, chipped, or deformed tiles.

1. Lay tiles square with room axis, unless otherwise indicated.
2. Lay tiles with grain running in one direction, unless otherwise indicated.

3.6 INSTALLATION OF RESILIENT SHEET FLOORING

A. Unroll sheet flooring and allow it to stabilize before cutting and fitting, if recommended in writing by manufacturer.

B. Lay out sheet flooring to comply with the following requirements:

1. Maintain uniformity of sheet flooring direction.
2. Arrange for a minimum number of seams and place them in inconspicuous and low-traffic areas, and not less than 6 in (150 mm) away from parallel joints in flooring substrates.
3. Match edges of sheet flooring for color shading and pattern at seams according to manufacturer's written recommendations.

4. Avoid cross seams.

C. Integral Cove Base: Form integral cove base by flashing sheet flooring up vertical surfaces. Support flooring at horizontal and vertical junction with cove strip. Butt flooring at top of base against cap strip.

D. Heat-Welded Seams: Rout joints and heat weld with welding bead, permanently fusing sections into seamless flooring. Prepare, weld, and finish seams according to manufacturer's written instructions and ASTM F 1516 to produce surfaces flush with adjoining flooring surfaces.

E. Chemically Bonded Seams: Chemically bond seams with bonding compound, permanently fusing sections into seamless flooring. Prepare seams and apply compound according to manufacturer's written instructions and ASTM F 693 to produce tightly fitted seams without gaps, overlays, or excess bonding compound on flooring surfaces.

F. Access Flooring Panel Substrate: Install cement board substrate over access flooring panel substrate before installation of resilient flooring.

3.7 CLEANING AND PROTECTING

A. Perform the following operations immediately after installing flooring products:

1. Remove adhesive and other surface blemishes from exposed surfaces using cleaner recommended by flooring manufacturer.
2. Sweep or vacuum floor thoroughly.
3. Do not wash floor until after time period recommended by flooring manufacturer.
4. Damp-mop floor to remove marks and soil.

B. Protect flooring against mars, marks, indentations, and other damage from construction operations and placement of equipment and fixtures during the remainder of construction period. Use protection methods recommended in writing by flooring manufacturer.

1. Cover products installed on floor surfaces with undyed, untreated building paper until just prior to Substantial Completion.
2. Do not move heavy and sharp objects directly over floor surfaces. Place plywood or hardboard panels over flooring and under objects while they are being moved. Slide or roll objects over panels without moving panels.

3.8 RESILIENT FLOORING SCHEDULE

A. See Interior Finish Legend on drawings.

END OF SECTION

SECTION 09 6513

RESILIENT BASE AND ACCESSORIES

PART 1 - GENERAL

1.1 SUMMARY

A. Section Includes: Resilient wall base, resilient flooring accessories, and supplementary items necessary for installation.

1.2 ACTION SUBMITTALS

A. Product Data: Manufacturer's technical literature for each product and system indicated.

1. Include manufacturer's specifications for materials, finishes, construction details, installation instructions, and recommendations for maintenance.

B. Product Schedule: Use same designations indicated on the Finish Schedule and Drawings.

C. Samples for Verification Purposes: In manufacturer's standard size, but not less than 12 in (300 mm) sample of each different color and pattern of resilient product specified, showing the **full range of variations expected in these characteristics.**

1.3 INFORMATIONAL SUBMITTALS

A. Product Test Reports: Written reports based on evaluation of comprehensive tests performed by qualified testing agency indicating that each product complies with requirements.

1.4 CLOSEOUT SUBMITTALS

A. Maintenance Data: To include in maintenance manuals.

1.5 MAINTENANCE MATERIAL SUBMITTALS

A. Extra Materials: Furnish the following extra materials that match and are from same production runs as products installed, packaged with protective covering for storage and identified with labels describing contents:

1. Furnish not less than 10 linear ft (3 linear m) for each 500 linear ft (150 linear m) or fraction thereof, of each different type, color, pattern, and size of resilient product installed.

1.6 QUALITY ASSURANCE

A. Manufacturer Qualifications: Manufacturer with not less than 5 years of experience in the successful production and in-service performance of products and systems similar to scope of this Project.

B. Fire-Test-Response Characteristics: Provide products with the following fire-test-response characteristics as determined by testing identical products per test method indicated below by a testing and inspecting agency acceptable to authorities having jurisdiction.

1. Critical Radiant Flux: Class I, 0.45 W/sq. cm or greater when tested per ASTM E 648.
2. Smoke Density: Maximum specific optical density of 450 or less when tested per ASTM E 662.

1.7 PRE-INSTALLATION CONFERENCE

A. Pre-Installation Conference: Before Work begins, conduct conference at Project site.

1.8 DELIVERY, STORAGE, AND HANDLING

A. Store resilient products and installation materials in dry spaces protected from the weather, with ambient temperatures maintained within range recommended by product manufacturer, but not less than 50 deg F (10 deg C) or more than 90 deg F (32 deg C).

1.9 PROJECT CONDITIONS

A. Maintain a temperature of not less than 70 deg F (21 deg C) or more than 85 deg F (29 deg C) in spaces to receive resilient products for at least 48 hours before installation, during installation, and for at least 48 hours after installation, unless otherwise recommended by product manufacturer.

B. Maintain resilient products prior to installation at the same temperature as the space where they are to be installed.

C. Close spaces to traffic during installation and for time period after installation recommended by manufacturer.

D. Install resilient products after other finishing operations, including painting, have been completed.

1.10 COORDINATION

A. Coordinate installation of products and systems with interfacing and adjoining construction to provide a successful installation without failure.

PART 2 - PRODUCTS

2.1 MANUFACTURERS

A. Acceptable Manufacturers: Subject to compliance with requirements of Contract Documents as judged by the Architect, provide product by one of manufacturers listed. If not listed, submit as substitution according to the Conditions of the Contract and Division 01 Section "Substitution Procedures".

1. Armstrong World Industries, Inc.
2. Burke Mercer Flooring Products; Division of Burke Industries, Inc.
3. Endura Rubber Flooring; Division of Burke Industries, Inc.
4. Flexco, Inc.
5. Johnsonite.
6. Mondo Rubber International, Inc.
7. Musson, R. C. Rubber Co.
8. Nora Rubber Flooring; Freudenberg Building Systems, Inc.

9. Roppe Corporation, USA.

B. Basis of Design (Product Standard): Contract Documents are based on products and systems specified to establish a standard of quality. Other manufacturers offering products having equivalent characteristics may be considered, provided deviations are minor and comply with requirements of Contract Documents as judged by the Architect.

1. Selections: As scheduled or as indicated in Interior Finish Legend on drawings.

2.2 MATERIALS, GENERAL

A. Single Source Responsibility: Furnish each type of product from single manufacturer. Provide secondary materials only as recommended by manufacturer of primary materials.

2.3 RESILIENT MATERIALS

A. Rubber Wall Base:

1. Standard: ASTM F 1861, Type TS (rubber, vulcanized thermoset) or TP (rubber, thermoplastic), Group 1 and 2.
2. Thickness: Nominal 1/8 in (3 mm).
3. Lengths: Provide longest length(s) available per manufacturer. Provide coils if available in profile(s) indicated.
4. Outside and Inside Corners:

a. Job-formed.

B. Resilient Molding Accessories:

1. Carpeting Accessories: Carpet cove cap, carpet step-off, carpet reducer, carpet edge bar.
2. Resilient Flooring Accessories: Reducer strip and others as required.
3. Material: Rubber.
4. Lengths: Provide longest length(s) available per manufacturer. Provide coils if available in profile(s) indicated.
5. Color and finish as selected by Architect from manufacturer's standard colors.

2.4 ACCESSORY MATERIALS

A. Adhesives: Water-resistant type recommended by product manufacturer suitable for products, applications, and substrate conditions indicated.

1. Use adhesives that comply with the following limits for VOC content when calculated according to 40 CFR 59, Subpart D (EPA Method 24):

a. Wall Base: Not more than 50 g/L.

PART 3 - EXECUTION

3.1 EXAMINATION

A. Acceptance of Surfaces and Conditions: Examine substrates to receive products and systems and associated work for compliance with requirements and other conditions affecting performance. Proceed only when unsatisfactory conditions have been corrected in a manner complying with Contract Documents. Starting work within a particular area will be construed as acceptance of surface conditions.

3.2 INSTALLATION, GENERAL

A. Installation Quality Standards: In addition to standards listed elsewhere, perform Work according to following, unless otherwise specified:

1. Respective manufacturer's written installation instructions.
2. Accepted submittals.
3. Contract Documents.

3.3 PREPARATION

A. General: Comply with manufacturer's instructions, recommendations, and specifications for cleaning and surface preparation. Surfaces shall have no defects, contaminants, or errors which would result in poor or potentially defective installation or would cause latent defects in Work.

3.4 INSTALLATION OF RESILIENT WALL BASE

A. Apply wall base to walls, columns, pilasters, casework and cabinets in toe spaces, and other permanent fixtures in rooms and areas where base is required.

B. Install wall base in lengths as long as practicable without gaps at seams and with tops of adjacent pieces aligned.

C. Tightly adhere wall base to substrate throughout length of each piece, with base in continuous contact with horizontal and vertical substrates.

D. Do not stretch wall base during installation.

E. Masonry Wall Surfaces: On masonry surfaces or other similar irregular substrates, fill voids along top edge of wall base with manufacturer's recommended adhesive filler material.

F. Job-Formed Corners: Use straight pieces of maximum lengths possible.

1. Outside Corners: Form without producing discoloration (whitening) at bends. Shave back of base at points where bends occur and remove strips perpendicular to length of base that are only deep enough to produce a snug fit without removing more than half the wall base thickness.
2. Inside Corners: Form by cutting an inverted V-shaped notch in toe of wall base at the point where corner is formed. Shave back of base where necessary to produce a snug fit to substrate.

3.5 INSTALLATION OF RESILIENT FLOORING ACCESSORIES

A. Resilient Molding Accessories: Butt to adjacent materials and tightly adhere to substrates throughout length of each piece. Install reducer strips at edges of floor coverings that would otherwise be exposed.

3.6 CLEANING AND PROTECTING

A. Perform the following operations immediately after installing resilient products:

1. Remove adhesive and other surface blemishes from exposed surfaces using cleaner recommended by manufacturer.
2. Sweep or vacuum horizontal surfaces thoroughly.
3. Do not wash resilient products until after time period recommended by manufacturer.
4. Damp-mop surfaces to remove marks and soil.

B. Protect resilient products against mars, marks, indentations, and other damage from construction operations and placement of equipment and fixtures during the remainder of construction period. Use protection methods indicated or recommended in writing by resilient product manufacturer.

3.7 RESILIENT PRODUCT SCHEDULE

A. See Interior Finish Legend on drawings.

END OF SECTION

SECTION 096566

RESILIENT ATHLETIC FLOORING

PART 1 - GENERAL

1.1 RELATED DOCUMENTS

A. Drawings and general provisions of the Contract, including General and Supplementary Conditions and Division 01 Specification Sections, apply to this Section.

1.2 SUMMARY

A. Section Includes:

1. Interlocking, rubber floor tile.

B. Related Requirements:

1. Section 096513 "Resilient Base and Accessories" for wall base and accessories installed with resilient athletic flooring.

1.3 COORDINATION

A. Coordinate layout and installation of flooring with floor inserts for gymnasium equipment.

1.4 ACTION SUBMITTALS

A. Product Data: For each type of product.

B. Shop Drawings: Show installation details and locations of the following:

1. Border tiles.
2. Floor patterns.
3. Layout, colors, widths, and dimensions of game lines and markers.
4. Locations of floor inserts for athletic equipment installed through flooring.
5. Seam locations for sheet flooring.

C. Samples: For each exposed product and for each type, color, and pattern specified, [6-inch- (150-mm-)] <Insert dimension> square in size and of the same thickness indicated for the Work.

1. Game-Line- and Marker-Paint Samples: Include Sample sets showing game-line- and marker-paint colors applied to flooring.
2. Seam Samples: For each vinyl sheet flooring color and pattern required; with seam running lengthwise and in center of [6-by-9-inch (150-by-230-mm)] <Insert dimensions> Sample applied to a rigid backing and prepared by Installer for this Project.

D. Samples for Initial Selection: For each type of resilient athletic flooring.

1. Game-Line and Marker Paint: Include charts showing available colors and glosses.

E. Samples for Verification: For each type, color, and pattern of flooring specified, [6-inch-(150-mm-)] <Insert dimension> square in size and of same thickness and material indicated for the Work.

1. Game-Line- and Marker-Paint Samples: Include Sample sets showing game-line- and marker-paint colors applied to flooring.

1.5 INFORMATIONAL SUBMITTALS

A. Qualification Data: For sheet vinyl flooring Installer.

1.6 CLOSEOUT SUBMITTALS

A. Maintenance Data: For resilient athletic flooring to include in maintenance manuals.

1.7 MAINTENANCE MATERIAL SUBMITTALS

A. Furnish extra materials[, from the same product run,] that match products installed and that are packaged with protective covering for storage and identified with labels describing contents.

1. Floor Tile: Furnish no fewer than 1 box for each 50 boxes or fraction thereof, of each type, color, pattern, and size of floor tile installed.

1.8 QUALITY ASSURANCE

A. Sheet Vinyl Flooring Installer Qualifications: An experienced installer who has completed sheet vinyl flooring installations using seaming methods indicated for this Project and similar in material, design, and extent to that indicated for this Project; who is acceptable to manufacturer; and whose work has resulted in installations with a record of successful in-service performance.

1.9 DELIVERY, STORAGE, AND HANDLING

A. Deliver materials in original packages and containers, with seals unbroken, bearing manufacturer's labels indicating brand name and directions for storing.

B. Store materials to prevent deterioration.

1. Store tiles on flat surfaces.

1.10 FIELD CONDITIONS

A. Install flooring after other finishing operations, including painting, have been completed.

PART 2 - PRODUCTS

2.1 MANUFACTURERS

A. PLITEQ

B. Basis of Design (Product Standard): Contract Documents are based on products and systems specified to establish a standard of quality. Other manufacturers offering products having equivalent characteristics may be considered, provided deviations are minor and comply with requirements of Contract Documents as judged by the Architect.
1. Selections: GenieMat FIT70.

C. Material: Recycled-rubber compound

D. Color and Pattern: As selected by Architect from manufacturer's full range.

E. Border: Interlocking tiles.

1. Border Color and Pattern: Matching floor tile

2.2 ACCESSORIES

A. Game-Line and Marker Paint: Complete system including primer, if any, compatible with flooring and recommended in writing by flooring and paint manufacturers for use indicated.

PART 3 - EXECUTION

3.1 EXAMINATION

A. Examine substrates, with Installer present, for compliance with requirements for installation tolerances, moisture content, and other conditions affecting performance of the Work.

1. Verify that finishes of substrates comply with tolerances and other requirements specified in other Sections and that substrates are free of cracks, ridges, depressions, scale, and foreign deposits that might interfere with adhesion of resilient products.

B. Proceed with installation only after unsatisfactory conditions have been corrected.

3.2 PREPARATION

A. Prepare substrates according to manufacturer's written instructions to ensure adhesion of flooring.

B. Concrete Substrates: Prepare according to ASTM F710.

1. Verify that substrates are dry and free of curing compounds, sealers, and hardeners.

C. Remove substrate coatings and other substances that are incompatible with adhesives and that contain soap, wax, oil, or silicone, using mechanical methods recommended in writing by manufacturer. Do not use solvents.

D. Use trowelable leveling and patching compound to fill cracks, holes, and depressions in substrates.

E. Move flooring and installation materials into spaces where they will be installed at least 48 hours in advance of installation unless manufacturer recommends a longer period in writing.

1. Do not install flooring until it is the same temperature as space where it is to be installed.

F. Sweep and vacuum clean substrates to be covered by flooring immediately before installation. After cleaning, examine substrates for moisture, alkaline salts, carbonation, and dust. Proceed with installation only after unsatisfactory conditions have been corrected.

3.3 FLOORING INSTALLATION, GENERAL

A. Comply with manufacturer's written installation instructions.

B. Scribe, cut, and fit flooring to butt neatly and tightly to vertical surfaces, equipment anchors, floor outlets, and other interruptions of floor surface.

C. Extend flooring into toe spaces, door reveals, closets, and similar openings unless otherwise indicated.

D. Maintain reference markers, holes, and openings that are in place or marked for future cutting by repeating subfloor markings on flooring. Use nonpermanent, nonstaining marking device.

3.4 FLOOR TILE INSTALLATION

A. Lay out tiles from center marks established with principal walls, discounting minor offsets, so tiles at opposite edges of room are of equal width. Adjust as necessary to avoid using cut widths that equal less than one-half tile at perimeter.

1. Lay tiles in pattern indicated.

B. Discard broken, cracked, chipped, or deformed tiles.

C. Tile Matching: Match tiles for color and pattern by selecting tiles from cartons in same sequence as manufactured and packaged if so numbered.

1. Lay tiles in pattern of colors and sizes indicated.

D. Adhered Floor Tile: Adhere products to substrates using a full spread of adhesive applied to substrate to comply with adhesive and flooring manufacturers' written instructions, including those for trowel notching, adhesive mixing, and adhesive open and working times.

1. Provide completed installation without open cracks, voids, raising and puckering at joints, telegraphing of adhesive spreader marks, and other surface imperfections.

E. Free-Lay Tile: Place flooring at locations indicated with units securely interconnected and fully seated on substrate to form a smooth, level surface.

~~3.5 GAME LINES AND MARKERS~~

~~A. Mask flooring at game lines and markers, and apply paint to produce sharp edges. Where crossing, break minor game line at intersection; do not overlap lines.~~

~~B. Apply game lines and markers in widths and colors according to requirements indicated on Drawings~~

3.6 CLEANING AND PROTECTION

A. Perform the following operations immediately after completing flooring installation:

1. Remove adhesive and other blemishes from flooring surfaces.
2. Sweep and vacuum flooring thoroughly.
3. Damp-mop flooring to remove marks and soil after time period recommended in writing by manufacturer.

B. Protect flooring from mars, marks, indentations, and other damage from construction operations and placement of equipment and fixtures during remainder of construction period. Use protection methods recommended in writing by manufacturer.

1. Do not move heavy and sharp objects directly over flooring. Protect flooring with plywood or hardboard panels to prevent damage from storing or moving objects over flooring.

END OF SECTION

SECTION 09 6623

THIN-SET TERRAZZO FLOORING

PART 1 - GENERAL

1.1 SUMMARY

A. Section Includes: Thin-set epoxy-resin terrazzo flooring products and systems and supplementary items necessary for installation.

1.2 ALLOWANCES

A. Concrete Moisture Barrier Allowance: Include allowance to provide Concrete Moisture Barrier Floor Treatment to concrete floor decks.

1.3 ACTION SUBMITTALS

A. Product Data: Manufacturer's technical literature for each product and system indicated.

1. Include manufacturer's specifications for materials, finishes, construction details, installation instructions, and recommendations for maintenance.

B. Shop Drawings: Show details of fabrication and installation, including plans, elevations, sections, details of components and attachments to other work. Include the following:

1. Divider, control-, and expansion-joint strips.
2. Base and border strips.
3. Abrasive strips.
4. Stair treads, risers, and landings.
5. Terrazzo patterns.

C. Product Schedule: Use same designations indicated on the Finish Schedule and Drawings.

D. Samples for Verification Purposes: For each type, material, color, and pattern of terrazzo and accessory required showing the full range of color, texture, and pattern variations expected. Label each terrazzo sample to identify matrix color and aggregate types, sizes, and proportions. Prepare samples of same thickness and from same material to be used for the Work in size indicated below:

1. Terrazzo: 12 in (300 mm) square samples.
2. Accessories: 6 in (150 mm) long samples of each exposed strip item required.

1.4 INFORMATIONAL SUBMITTALS

A. Product Test Reports: Written reports based on evaluation of comprehensive tests performed by qualified testing agency indicating that each product complies with requirements.

B. Manufacturer's Project Acceptance Document: Certification by the manufacturer that its product(s) are approved, acceptable, suitable for use in specific locations, for specific details, and for applications indicated, specified, or required.

C. Qualification Data:

1. For firms and persons specified in "Quality Assurance" to demonstrate their capabilities and experience. Include list of completed projects.

1.5 CLOSEOUT SUBMITTALS

A. Maintenance Data: To include in maintenance manuals. Submit manufacturer's instructions for maintenance of installed work, including methods and frequency for maintaining optimum condition under anticipated use. Include precautions against cleaning materials and methods which may be detrimental to finishes and performance. Include product data for flooring care products used or recommended by installer and names, addresses, and telephone numbers of local sources for products.

1.6 QUALITY ASSURANCE

A. Installer Qualifications:

1. Experience: Installer's personnel with not less than 5 years of experience in the successful performance of Work similar to scope of this Project.
2. Supervision: Installer shall maintain a competent supervisor at Project while the Work is in progress, and who has not less than 5 years of experience installing products and systems similar to scope of this Project.
3. Manufacturer Acceptance: Installer shall be certified, approved, licensed, or acceptable to manufacturer to install products.
4. NTMA Membership: Installer shall be a contractor member of NTMA.

B. Mock-ups: Prior to fabrication and installation, build mock-up for each form of construction and finish required to verify selections made under sample Submittals and to demonstrate aesthetic effects and qualities of materials and execution. Build mock-up using materials indicated for the completed Work.

1. Build mock-up in the location and of the size indicated or, if not indicated, as directed by Architect. Contractor shall provide structural support framework.

    a. Show typical components, attachments to building structure, and requirements of installation.

2. Notify Architect seven days in advance of the dates and times when mock-up will be installed.
3. Obtain Architect's acceptance of mock-ups before starting fabrication or installation.
4. Acceptance of mock-ups does not constitute acceptance of deviations from the Contract Documents contained in mock-ups unless such deviations are specifically noted by Contractor and accepted by Architect in writing.
5. Demolish and remove mock-ups when directed by Architect unless accepted to become part of the completed Work.

1.7 PRE-INSTALLATION CONFERENCE

A. Pre-Installation Conference: Before Work begins, conduct conference at Project site.

1. Participants:

a. Architect.
b. Contractor, including superintendent.
c. Installer, including project manager and supervisor.
d. If requested, Manufacturer's qualified technical representative.
e. Installers of other construction interfaced with Work.

2. Minimum Agenda: Installer shall demonstrate understanding of the Work required by describing detailed procedures for preparing, installing, and cleaning the Work. Demonstration shall include, but not be limited to, following topics:

a. Tour representative areas of Work, inspect and discuss condition of substrate, and other preparatory work performed by other trades.
b. Review Contract Document requirements.
c. Review approved submittals.
d. Review inspection and testing requirements.
e. Review environmental conditions and procedures for coping with unfavorable conditions.
f. Resolve deviations or differences between Contract Documents and the manufacturer's specifications.

3. Record discussions, including decisions and agreements, and prepare report.

1.8 DELIVERY, STORAGE, AND HANDLING

A. Deliver materials to project site in supplier's original wrappings and containers, labeled with source's or manufacturer's name, material or product brand name, and lot number, if any.

B. Store materials in their original, undamaged packages and containers, inside a well-ventilated area protected from weather, moisture, soiling, extreme temperatures, and humidity.

1.9 PROJECT CONDITIONS

A. Environmental Limitations: Comply with manufacturer's written instructions for substrate temperature, ambient temperature, moisture, ventilation, and other conditions affecting terrazzo installation.

B. Provide permanent lighting or, if permanent lighting is not in place, simulate permanent lighting conditions during terrazzo installation.

C. Close spaces to traffic during epoxy terrazzo application and for not less than 24 hours after application unless manufacturer recommends a longer period.

D. Control and collect dust produced by grinding operations. Protect adjacent construction from detrimental effects of grinding operations.

1.10 COORDINATION

A. Coordinate installation of products and systems with interfacing and adjoining construction to provide a successful installation without failure.

PART 2 - PRODUCTS

2.1 MANUFACTURERS AND PRODUCTS

A. Acceptable Manufacturers and Products: Subject to compliance with requirements of Contract Documents as judged by the Architect, provide product by one of manufacturers listed. If not listed, submit as substitution according to the Conditions of the Contract and Division 01 Section "Substitution Procedures".

1. Crossfield Products Corp., Dex-O-Tex Division; Cheminert Terrazzo.
2. National Terazzo & Mosaic Association.

2.2 MATERIALS, GENERAL

A. Single Source Limitations for Aggregates: Obtain each color, grade, type, and variety of aggregate from one source with resources to provide materials of consistent quality in appearance and physical properties. Provide secondary materials only as recommended by manufacturer of primary materials.

2.3 PERFORMANCE REQUIREMENTS

A. NTMA Standards: Comply with NTMA's "Terrazzo Specifications and Design Guide" and with written recommendations for terrazzo type indicated unless more stringent requirements are specified.

2.4 THIN-SET RESINOUS TERRAZZO MATERIALS

A. Flexible Reinforcing Membrane: Manufacturer's recommended resinous membrane for substrate crack preparation and reflective crack reduction.

B. Primer: Manufacturer's product recommended for substrate and use indicated.

C. Epoxy Resin: Manufacturer's standard recommended for use indicated and in color required for mix indicated.

1. Physical Properties without Aggregates:

a. Hardness: 60 to 85 per ASTM D 2240, Shore D.
b. Minimum Tensile Strength: 3000 psi (20.7 MPa) per ASTM D 638 for a 2 in (50 mm) specimen made using a "C" die per ASTM D 412.
c. Minimum Compressive Strength: 10,000 psi (6.9 MPa) per ASTM D 695, Specimen B cylinder.
d. Chemical Resistance: No deleterious effects by contaminants listed below after 7 day immersion at room temperature per ASTM D 1308.

1) Distilled water.
2) Mineral water.
3) Isopropanol.
4) Ethanol.
5) 0.025 percent detergent solution.
6) 1.0 percent soap solution.
7) 10 percent sodium hydroxide.
8) 10 percent hydrochloric acid.

9) 30 percent sulfuric acid.
10) 5 percent acetic acid.

2. Physical Properties with Aggregates: For resin blended with Georgia White marble, ground, grouted, and cured per requirements in NTMA's "Guide Specification for Epoxy Terrazzo," comply with the following:

a. Flammability: Self-extinguishing, maximum extent of burning 0.25 in (6.35 mm) per ASTM D 635.
b. Thermal Coefficient of Linear Expansion: 0.0025 in/in per deg F (0.0025 mm/mm per 0.5556 deg C) for temperature range of minus 12 to 140 deg F (minus 24 to plus 60 deg C) per ASTM D 696.

D. Aggregate: Complying with NTMA gradation standards for mix indicated and containing no deleterious or foreign matter.

1. Abrasion and Impact Resistance: Less than 40 percent loss per ASTM C 131.
2. 24-Hour Absorption Rate: Less than 0.75 percent.
3. Dust Content: Less than 1.0 percent by weight.

E. Finishing Grout: Resin based.

F. Terrazzo Mix: Comply with NTMA's "Terrazzo Specifications and Design Guide" and manufacturer's written instructions for matrix and marble-chip proportions and mixing.

1. Color and Pattern: As scheduled or as indicated in Design Selections.

2.5 STRIP MATERIALS

A. Heavy-Top Divider Strips: L-type angle, 3/8 in (10 mm) deep.

1. Bottom-Section Material: Match top section material.
2. Top-Section Material: As scheduled or as indicated in the interior finish legend.
3. Top-Section Width: As scheduled or as indicated in in the interior finish legend.

B. Control-Joint Strips: Separate, double L-type angles, positioned back to back, that match material, thickness, and color of divider strips and in depth required for topping thickness indicated.

C. Accessory Strips: Match divider-strip width, material, and color unless otherwise indicated. Use the following types of accessory strips as required to provide a complete installation:

1. Base-bead strips for exposed top edge of terrazzo base.
2. Edge-bead strips for exposed edges of terrazzo.
3. Nosings for terrazzo stair treads and landings.

D. Abrasive Strips for Stair Treads and Landings: Silicon carbide or aluminum oxide in epoxy-resin binder set in channel, 1/2 in (12 mm) wide by depth required by terrazzo thickness by 4 in (100 mm) less than stair width. Color as selected by Architect from manufacturer's full range.

2.6 ACCESSORY MATERIALS

A. Strip Adhesive: Epoxy-resin adhesive recommended by adhesive manufacturer for this use and acceptable to terrazzo manufacturer.

B. Anchoring Devices:

1. Strips: Provide mechanical anchoring devices for strip materials as required for secure attachment to substrate.

C. Patching and Fill Material: Terrazzo manufacturer's resinous product approved and recommended by manufacturer for application indicated.

D. Cleaner: Chemically neutral cleaner with pH factor between 7 and 10 that is biodegradable, phosphate free, and recommended by cleaner manufacturer for use on terrazzo type indicated.

E. Seal Coat: Slip- and stain-resistant surface-type sealer that is chemically neutral with pH factor between 7 and 10; does not affect color or physical properties of terrazzo; is recommended by sealer manufacturer; and complies with NTMA's "Terrazzo Specifications and Design Guide" for terrazzo type indicated.

F. Joint Sealants: As specified in Division 07 Section "Joint Sealants".

2.7 CONCRETE MOISTURE BARRIER FLOOR TREATMENT

A. Epoxy-Based Moisture Barrier Floor Treatment: Two-component, high-performance, non-flammable, rapid drying, water based, low odor, low VOC, two-component, penetrating epoxy; formulated to reduce moisture vapor transmission and surface alkalinity from concrete substrates, including aged or freshly placed ("green") concrete, prior to installation of impervious glued-down finish flooring specified in other Division 09 sections.

1. Basis of Design (Product Standard): Bostik, Inc.; D-250.

B. Cementitious Overcoat: Fast-setting latex-fortified Portland cement skim coating intended for interior uses.

1. Basis of Design (Product Standard): Bostik, Inc.; Webcrete 95.

PART 3 - EXECUTION

3.1 EXAMINATION

A. Acceptance of Surfaces and Conditions: Examine substrates to receive products and systems and associated work for compliance with requirements and other conditions affecting performance. Proceed only when unsatisfactory conditions have been corrected in a manner complying with Contract Documents. Starting work within a particular area will be construed as acceptance of surface conditions.

3.2 INSTALLATION, GENERAL

A. Installation Quality Standards: In addition to standards listed elsewhere, perform Work according to following, unless otherwise specified:

1. Respective manufacturer's written installation instructions.
2. Accepted submittals.
3. Contract Documents.

3.3 PREPARATION

A. General: Comply with manufacturer's instructions, recommendations, and specifications for cleaning and surface preparation. Surfaces shall have no defects, contaminants, or errors which would result in poor or potentially defective installation or would cause latent defects in Work.

B. Concrete Substrates:

1. Verify that concrete substrates are dry and free of laitance, glaze, efflorescence, curing compounds, form-release agents, dust, dirt, grease, oil, and other contaminants incompatible with terrazzo flooring. Determine adhesion and dryness characteristics by performing the following tests as recommended by terrazzo manufacturer.

    a. Bead-blast concrete substrate with an apparatus that abrades the surface, contains the dispensed shot within the apparatus, and re-circulates the shot by vacuum pickup.
    b. Repair damaged and deteriorated concrete according to terrazzo manufacturer's written recommendations.
    c. Use patching and fill material to fill holes and depressions in substrates according to terrazzo manufacturer's written instructions.

2. Verify that concrete substrates are free of cracks, ridges, depressions, scale, and foreign deposits.
3. Moisture Testing: Perform one or both of the following tests as recommended by flooring manufacturer. Perform 3 moisture tests for first 1000 sf (92.9 sm) of concrete substrate scheduled to receive flooring and 1 test for each additional 1000 sf (92.9 sm) or fraction thereof. Proceed with installation only after concrete substrates pass testing.

    a. Anhydrous Calcium Chloride Test: Perform in accordance with ASTM F 1869. Proceed with installation only after concrete substrates have maximum moisture-vapor-emission rate of 3 lbs of water/1000 sf (1.36 kg of water/92.9 sm) in 24 hours.
    b. Relative Humidity Test: Using in situ probes, perform in accordance with ASTM F 2170. Proceed with installation only after concrete substrates have a maximum 80 percent relative humidity level measurement.

4. Moisture Barrier Floor Treatment: For concrete substrates not meeting moisture test standards specified above, apply epoxy-based moisture barrier floor treatment and cementitious overcoat to concrete substrate in accordance with manufacturer's written instructions.

C. Protect other work from dust generated by grinding operations. Control dust to prevent air pollution and comply with environmental protection regulations.

3.4 INSTALLATION OF THIN-SET TERRAZZO

A. General:

1. Comply with NTMA's written recommendations for terrazzo and accessory installation.
2. Place, rough grind, grout, cure grout, fine grind, and finish terrazzo according to manufacturer's written instructions and NTMA's "Terrazzo Specifications and Design Guide ".
3. Installation Tolerance: Limit variation in terrazzo surface from level to 1/4 in per 10 ft (6 mm per 3 m); noncumulative.
4. Ensure that matrix components and fluids from grinding operations do not stain terrazzo by reacting with divider and control-joint strips.
5. Delay fine grinding until heavy trade work is complete and construction traffic through area is restricted.

B. Thin-Set Terrazzo Thickness: 3/8 in (10 mm).

C. Flexible Reinforcing Membrane:

1. Prepare and prefill substrate cracks with membrane material.
2. Coverage:

    a. Install membrane at substrate cracks in areas to receive terrazzo.
    b. Install membrane to produce full substrate coverage in areas to receive terrazzo.

3. Prepare membrane according to manufacturer's written instructions before applying substrate primer.

D. Primer: Apply to terrazzo substrates according to manufacturer's written instructions.

1. Strip Materials:

E. Divider and Control-Joint Strips:

1. Locate divider strips in locations indicated, but not to exceed 400 sf (37 sm).
2. Install control-joint strips back to back directly above concrete-slab control joints and construction joints (cold joints).
3. Install control-joint strips with 1/4 in (6 mm) gap between strips, and install sealant in gap.
4. Install strips in adhesive setting bed without voids below strips, or mechanically anchor strips as required to attach strips to substrate, as recommended by strip manufacturer.

F. Accessory Strips: Install as required to provide a complete installation.

G. Fine Grinding: Grind with 120 or finer grit stones until all grout is removed from surface. Repeat rough grinding, grout coat, and fine grinding if large voids exist after initial fine grinding. Produce surface with a minimum of 70 percent aggregate exposure.

H. Repair: Remove and replace terrazzo areas that evidence lack of bond with substrate. Cut out terrazzo areas in panels defined by strips and replace to match adjacent terrazzo, or repair panels according to NTMA's written recommendations, as accepted by Architect.

3.5 INSTALLATION OF THIN-SET TERRAZZO AT ELEVATOR CAR

A. Substrate: Install cementitious backer unit over plywood. Maintain top surface elevation of cementitious backer unit substrate such that finish level of terrazzo is level with elevator cab door threshold.

B. Flexible Reinforcing Membrane: Install membrane to produce full substrate coverage.

C. Thin-Set Terrazzo Thickness: 3/8 in (10 mm).

D. Perimeter Sealant Joint: Install 1/2 in (12 mm) sealant joint at elevator car perimeter complying with requirements of Division 07 Section "Joint Sealants".

3.6 CLEANING AND PROTECTION

A. Cleaning:

1. Remove grinding dust from installation and adjacent areas.
2. Wash surfaces with cleaner according to NTMA's written recommendations and manufacturer's written instructions; rinse surfaces with water and allow them to dry thoroughly.

B. Sealing:

1. Seal surfaces according to NTMA's written recommendations.
2. Apply sealer according to sealer manufacturer's written instructions.

C. Protection: Provide final protection and maintain conditions, in a manner acceptable to Installer, that ensure that terrazzo is without damage or deterioration at time of Substantial Completion.

3.7 FINISH SCHEDULE

A. Terrazzo Color and Pattern: As scheduled in the interior finish legend.

END OF SECTION

SECTION 09 6800

CARPETING

PART 1 - GENERAL

1.1 SUMMARY

A. Section Includes: Carpeting products and systems and supplementary items necessary for installation.

B. Resilient wall base and resilient molding accessories installed with carpeting are specified in Division 09 Section "Resilient Base and Accessories".

1.2 ALLOWANCES

A. Concrete Moisture Barrier Allowance: Include allowance to provide Concrete Moisture Barrier Floor Treatment to concrete floor decks.

1.3 ACTION SUBMITTALS

A. Product Data: Manufacturer's technical literature for each product and system indicated.

1. Include manufacturer's specifications for materials, finishes, construction details, installation instructions, and recommendations for maintenance.

B. Shop Drawings: Provide floor plans, including columns, doorways, enclosing walls or partitions, built-in cabinets, and locations of cutouts, to indicate the following:

1. Carpeting type and color.
2. Type of substrate.
3. Type of installation.
4. Pattern type, location, and direction.
5. Pile direction.
6. Type, color, and location of insets and borders.
7. Type, color, and location of edge, transition, and other accessory strips.
8. Transition details to other flooring materials.

C. Product Schedule: Use same designations indicated on the Finish Schedule and Drawings.

D. Samples for Verification Purposes: In manufacturer's standard size, but not less than 6 in by 9 in (150 mm by 230 mm) sample of each different color, texture, and pattern of carpeting product specified, showing the full range of variations expected in these characteristics. Label each sample with manufacturer's name, material description, color, pattern, and designation indicated on Drawings and in Schedules.

1.4 INFORMATIONAL SUBMITTALS

A. Product Test Reports: Written reports based on evaluation of comprehensive tests performed by qualified testing agency indicating that each product complies with requirements.

B. Manufacturer's Project Acceptance Document: Certification by the manufacturer that its product(s) are approved, acceptable, suitable for use in specific locations, for specific details, and for applications indicated, specified, or required.

C. Warranty: Sample of warranty.

1. Provide manufacturer's written warranty covering materials and installation (labor) stating obligations, remedies, limitations and exclusions.

1.5 CLOSEOUT SUBMITTALS

A. Maintenance Instructions: Include in operation and maintenance manual as required by Division 01 Section "Closeout Procedures". Submit manufacturer's instructions for maintenance of installed work, including methods and frequency for maintaining optimum condition under anticipated use. Include precautions against cleaning materials and methods which may be detrimental to finishes and performance.

1.6 MAINTENANCE MATERIAL SUBMITTALS

A. Extra Materials: Furnish the following extra materials that match and are from same production runs as products installed, packaged with protective covering for storage and identified with labels describing contents:

1. Tile Carpeting: Furnish full-size units of tile carpeting equal to 5 percent of amount installed for each color and type indicated, but not less than 10 sq yd (8.4 sq m).

1.7 QUALITY ASSURANCE

A. Manufacturer Qualifications: Manufacturer with not less than 5 years of experience in the successful production and in-service performance of products and systems similar to scope of this Project.

B. Fire-Test-Response Characteristics: Provide products with the following fire-test-response characteristics as determined by testing identical products per test method indicated below by a testing and inspecting agency acceptable to authorities having jurisdiction.

1. Critical Radiant Flux: Class I, 0.45 W/sq. cm or greater when tested per ASTM E 648.
2. Smoke Density: Maximum specific optical density of 450 or less when tested per ASTM E 662.

1.8 PRE-INSTALLATION CONFERENCE

A. Pre-Installation Conference: Before Work begins, conduct conference at Project site.

1.9 DELIVERY, STORAGE, AND HANDLING

A. General: Comply with CRI 104, Section 5, "Storage and Handling".

1.10 PROJECT CONDITIONS

A. General: Comply with CRI 104, Section 6.1, "Site Conditions; Temperature and Humidity".

B. Environmental Limitations: Do not install carpeting until wet work in spaces is complete and dry, and ambient temperature and humidity conditions are maintained at the levels indicated for Project when occupied for its intended use.

C. Maintain carpeting products prior to installation at the same temperature as the space where they are to be installed.

D. Close spaces to traffic during carpeting installation and for time period after installation recommended by manufacturer.

E. Install carpeting products after other finishing operations, including painting, have been completed.

F. Do not install carpeting over concrete substrates until slabs have cured and are sufficiently dry to bond with adhesive, as determined by carpeting manufacturer's recommended tests. Refer to "Preparation" Article for requirements.

1.11 COORDINATION

A. Coordinate installation of products and systems with interfacing and adjoining construction to provide a successful installation without failure.

1.12 WARRANTY

A. Manufacturer's Warranty for Carpeting: Furnish manufacturer's written material and labor warranty signed by an authorized representative using manufacturer's standard form agreeing to furnish materials and labor required to repair or replace work which exhibits material defects caused by manufacture or design and installation of product. "Defects" is defined to include but not limited to deterioration or failure to perform as required.

1. Coverage of warranty includes but is not limited to more than 10 percent edge raveling, snags, runs, dimensional stability, loss of tuft bind strength, loss of face fiber, and delamination.
2. Warranty Period: Manufacturer shall warrant the products to be free from material and labor Defects for a period of 10 years from date of Substantial Completion.

B. Warranty does not include deterioration or failure of carpeting due to unusual traffic, failure of substrate, vandalism, or abuse.

PART 2 - PRODUCTS

2.1 MANUFACTURERS

A. Acceptable Manufacturers: Subject to compliance with requirements of Contract Documents as judged by the Architect, provide product by one of manufacturers listed. If not listed, submit as substitution according to the Conditions of the Contract and Division 01 Section "Substitution Procedures".

B. Basis of Design (Product Standard): Contract Documents are based on products and systems specified to establish a standard of quality. Other manufacturers offering products having equivalent characteristics may be considered, provided deviations are minor and comply with requirements of Contract Documents as judged by the Architect.

2.2 MATERIALS, GENERAL

A. Single Source Responsibility: Furnish each type of product from single manufacturer. Provide secondary materials only as recommended by manufacturer of primary materials.

B. Emissions: Provide carpet that complies with testing and product requirements of CRI's "Green Label Plus" program.

2.3 TILE CARPETING

A. Basis of Design (Product Standard):

1. Selections: As scheduled or as indicated in Interior Finish Legend on drawings.

2.4 ACCESSORY MATERIALS

A. Concrete Slab Primer: Non-staining type as recommended by carpeting manufacturer.

B. Trowelable Leveling and Patching Compounds: Latex-modified, hydraulic-cement-based formulation provided by or recommended by carpeting manufacturer.

C. Adhesives: Water-resistant, mildew-resistant, nonstaining type to suit products and subfloor conditions indicated, that complies with flammability requirements for installed carpeting and is recommended or provided by carpeting manufacturer.

1. Use adhesives that comply with the following limits for VOC content when calculated according to 40 CFR 59, Subpart D (EPA Method 24):

a. Not more than 50 g/L.

D. Concrete Moisture Barrier Floor Treatment:

1. Epoxy-Based Moisture Barrier Floor Treatment: Two-component, high-performance, non-flammable, rapid drying, water based, low odor, low VOC, two-component, penetrating epoxy; formulated to reduce moisture vapor transmission and surface alkalinity from concrete substrates, including aged or freshly placed ("green") concrete, prior to installation of impervious glued-down finish flooring specified in other Division 09 sections.

a. Basis of Design (Product Standard): Bostik, Inc.; D-250.

2. Cementitious Overcoat: Fast-setting latex-fortified Portland cement skim coating intended for interior uses.

a. Basis of Design (Product Standard): Bostik, Inc.; Webcrete 95.

PART 3 - EXECUTION

3.1 EXAMINATION

A. Acceptance of Surfaces and Conditions: Examine substrates to receive products and systems and associated work for compliance with requirements and other conditions affecting performance. Proceed only when unsatisfactory conditions have been corrected in a manner complying with Contract Documents. Starting work within a particular area will be construed as acceptance of surface conditions.

3.2 INSTALLATION, GENERAL

A. Installation Quality Standards: In addition to standards listed elsewhere, perform Work according to following, unless otherwise specified:

1. Respective manufacturer's written installation instructions.
2. Accepted submittals.
3. Contract Documents.

3.3 PREPARATION

A. General: Comply with manufacturer's instructions, recommendations, and specifications for cleaning and surface preparation. Surfaces shall have no defects, contaminants, or errors which would result in poor or potentially defective installation or would cause latent defects in Work.

B. Comply with CRI 104, Section 6.2, "Site Conditions; Floor Preparation" and carpeting manufacturer's written installation instructions for preparing substrates indicated to receive carpeting installation.

C. Concrete Substrates: Prepare according to ASTM F 710.

1. Verify that concrete substrate finishes comply with requirements specified in Division 03 Section "Concrete Finishing" for concrete substrates receiving carpeting.
2. Verify that concrete substrates are free of cracks, ridges, depressions, scale, and foreign deposits.
3. Verify that concrete substrates are dry and free of curing compounds, sealers, hardeners, and other materials that may interfere with adhesive bond. Unless concrete has been water-cured, then proceed with the following:

    a. Shot-blast concrete substrate with an apparatus that abrades the surface, contains the dispensed shot within the apparatus, and recirculates the shot by vacuum pickup.
    b. Repair damaged and deteriorated concrete according to flooring manufacturer's written recommendations.

4. Determine adhesion and dryness characteristics by performing the following tests as recommended by flooring manufacturer.
5. Alkalinity and Adhesion Testing: Perform tests recommended by flooring manufacturer. A pH range of 5 to 9 is required when substrate is wetted with distilled water and pHydrion paper is applied. Proceed with installation only after concrete substrates pass testing.

6. Moisture Testing: Perform one or both of the following tests as recommended by flooring manufacturer. Perform 3 moisture tests for first 1000 sf (92.9 sm) of concrete substrate scheduled to receive flooring and 1 test for each additional 1000 sf (92.9 sm) or fraction thereof. Proceed with installation only after concrete substrates pass testing.

    a. Perform anhydrous calcium chloride test in accordance with ASTM F 1869. Proceed with installation only after concrete substrates have maximum moisture-vapor-emission rate of 3 lbs of water/1000 sf (1.36 kg of water/92.9 sm) in 24 hours.
    b. Perform relative humidity test using in situ probes in accordance with ASTM F 2170. Proceed with installation only after concrete substrates have a maximum 75 percent relative humidity level measurement.

7. Moisture Barrier Floor Treatment: For concrete substrates not meeting moisture test standards specified above, apply epoxy-based moisture barrier treatment and cementitious overcoat to concrete substrate in accordance with manufacturer's written instructions.

D. Use trowelable leveling and patching compounds, according to manufacturer's written instructions, to fill cracks, holes, and depressions in substrates.

E. Broom and vacuum clean substrates to be covered immediately before installing carpeting. After cleaning, reexamine substrates for moisture, alkaline salts, carbonation, or dust. Proceed with installation only after unsatisfactory conditions have been corrected.

3.4 INSTALLATION OF CARPETING

A. Scribe, cut, and fit carpeting to butt neatly and tightly to vertical surfaces and permanent fixtures, including built-in furniture, cabinets, pipes, outlets, edgings, door frames, thresholds, and nosings.

B. Extend carpeting into toe spaces, door reveals, closets, and similar openings. Extend carpeting to center of door openings.

C. Maintain reference markers, holes, and openings that are in place or marked for future cutting by repeating on finish carpeting as marked on substrate. Use chalk or other nonpermanent, non-staining marking device.

D. Do not bridge building expansion joints with carpet.

E. Bind or seal cut edges as recommended by carpeting manufacturer.

F. Install pattern parallel to walls and borders unless otherwise indicated.

G. Hand-roll carpeting in both directions from center out to embed carpeting in adhesive and eliminate trapped air according to manufacturer's written instructions. At walls, door casings, and other locations where access by roller is impractical, press carpeting firmly in place with flat-bladed instrument.

3.5 INSTALLATION OF TILE CARPETING

A. Tile Carpet at Concrete Substrates: Comply with CRI 104, Section 13, "Carpet Modules (Tiles)" and carpet manufacturer's written recommendations for full glue-down installation of every tile with releasable adhesive.

B. Install pattern parallel to walls and borders unless otherwise indicated.

3.6 INSTALLATION OF ADHERED SHEET CARPETING

A. Apply concrete slab primer, if recommended by carpeting manufacturer, prior to applying adhesive. Apply according to manufacturer's directions.

B. Adhere to concrete substrates using a full spread of adhesive applied to substrate to comply with carpeting manufacturer's written instructions, including those for trowel notching, adhesive mixing, and adhesive open and working times.

1. Provide completed installation without open cracks, voids, raising and puckering at joints, telegraphing of adhesive spreader marks, and other surface imperfections.

C. Comply with carpeting manufacturer's written recommendations for seam locations and direction of carpeting; maintain uniformity of carpeting direction and lay of pile. At doorways, center seams under the door in closed position.

3.7 CLEANING AND PROTECTION

A. Perform the following operations immediately after installing carpeting:

1. Remove excess adhesive and other surface blemishes from exposed surfaces using cleaner recommended by carpeting manufacturer.
2. Remove yarns that protrude from carpeting surface.
3. Vacuum carpeting using commercial machine with face-beater element.

B. Protect installed carpeting to comply with CRI 104, Section 16, "Protecting Indoor Installations".

C. Protect carpeting against damage from construction operations and placement of equipment and fixtures during the remainder of construction period. Use protection methods indicated or recommended in writing by carpeting manufacturer.

3.8 CARPETING SCHEDULE

A. Selections: As shown in interior Finish Legend on drawings.

END OF SECTION

SECTION 09 7200

WALL COVERINGS

PART 1 - GENERAL

1.1 SUMMARY

A. Section Includes: Wall coverings and supplementary items necessary for installation.

1.2 ACTION SUBMITTALS

A. Product Data: Manufacturer's technical literature for each product and system indicated.

1. Include manufacturer's specifications for materials, finishes, installation instructions, and recommendations for maintenance.
2. Include data on physical characteristics, durability, fade resistance, and flame resistance characteristics.

B. Shop Drawings: Show location and extent of each wall covering type. Indicate seams and termination points.

C. Samples for Initial Selection: Manufacturer's color charts consisting of actual units or sections of units showing the full range of colors, textures, and patterns available.

D. Samples for Verification Purposes: Sets for each color, texture, and pattern specified, showing the full range of variations expected in these characteristics.

1. Full-width sample, not less than 36 in (900 mm) long, from dye lot used for the Work.
2. Submit sample with specified treatments applied for products specified.
3. Show complete pattern repeat where applicable.

E. Product Schedule: Use same designations indicated on the Finish Schedule and Drawings.

1.3 INFORMATIONAL SUBMITTALS

A. Product Test Reports: Written reports based on evaluation of comprehensive tests performed by qualified testing agency indicating that each product complies with requirements.

B. Qualification Data:

1. For firms and persons specified in "Quality Assurance" to demonstrate their capabilities and experience. Include list of completed projects.

1.4 CLOSEOUT SUBMITTALS

A. Maintenance Data: To include in maintenance manuals.

1.5 MAINTENANCE MATERIAL SUBMITTALS

A. Extra Materials: Furnish the following extra materials that match and are from same production runs as products installed, packaged with protective covering for storage and identified with labels describing contents:

1. Wall-Covering Materials: For each type, full-size units equal to 5 percent of amount installed.

1.6 QUALITY ASSURANCE

A. Manufacturer Qualifications: Manufacturer with not less than 5 years of experience in the successful production and in-service performance of products and systems similar to scope of this Project.

B. Fire-Test-Response Characteristics: As determined by testing identical wall coverings applied with identical adhesives to substrates according to test method indicated below by a qualified testing agency. Identify products with appropriate markings of applicable testing agency.

1. Surface-Burning Characteristics: As follows, per ASTM E 84:

a. Flame-Spread Index: 25 or less.
b. Smoke-Developed Index: 50 or less.

C. Mock-ups: Prior to fabrication and installation, build mock-up for each form of construction and finish required to verify selections made under sample Submittals and to demonstrate aesthetic effects and qualities of materials and execution. Build mock-up to comply with the following requirements, using materials indicated for the completed Work:

1. Build mock-up in the location and of the size indicated or, if not indicated, as directed by Architect. Contractor shall provide structural support framework.

a. Show typical components and requirements of installation.

2. Notify Architect seven days in advance of the dates and times when mock-up will be installed.
3. Obtain Architect's acceptance of mock-ups before starting fabrication or installation.
4. Acceptance of mock-ups does not constitute acceptance of deviations from the Contract Documents contained in mock-ups unless such deviations are specifically noted by Contractor and accepted by Architect in writing.
5. Demolish and remove mock-ups when directed by Architect unless accepted to become part of the completed Work.

1.7 PRE-INSTALLATION CONFERENCE

A. Pre-Installation Conference: Before Work begins, conduct conference at Project site.

1.8 PROJECT CONDITIONS

A. Do not install wall coverings until space is enclosed and weatherproof, wet-work in space is completed and nominally dry, work above ceilings is complete, and ambient temperature and humidity conditions are and will be continuously maintained at values near those indicated for final occupancy.

B. Environmental Limitations: Do not deliver or install wall coverings until spaces are enclosed and weathertight, wet work in spaces is complete and dry, work above ceilings is complete, and temporary HVAC system is operating and maintaining ambient temperature and humidity conditions at occupancy levels during the remainder of the construction period.

1. Wood-Veneer Wall Coverings: Condition spaces for not less than 48 hours before installation.

C. Lighting: Do not install wall covering until a lighting level of not less than 15 foot-candles (160 lux) is provided on the surfaces to receive wall covering.

D. Ventilation: Provide continuous ventilation during installation and for not less than the time recommended by the wall covering manufacturer for full drying or curing.

1.9 COORDINATION

A. Coordinate installation of products and systems with interfacing and adjoining construction to provide a successful installation without failure.

PART 2 - PRODUCTS

2.1 MANUFACTURERS

A. Acceptable Manufacturers: Subject to compliance with requirements of Contract Documents as judged by the Architect, provide product by one of manufacturers listed. If not listed, submit as substitution according to the Conditions of the Contract and Division 01 Section "Substitution Procedures".

B. Available Manufacturers: Subject to compliance with requirements of Contract Documents as judged by the Architect, manufacturers offering products that may be incorporated into the Work include, but are not limited to, those listed.

C. Basis of Design (Product Standard): Contract Documents are based on product and systems specified to establish a standard of quality. Other manufacturers offering products having equivalent characteristics may be considered, provided deviations are minor and comply with requirements of Contract Documents as judged by the Architect.

1. Manufacturer and Product: As scheduled or as indicated in the Interior Finish Legend.

2.2 MATERIALS, GENERAL

A. Single Source Responsibility: Furnish each type of product from single manufacturer. Provide secondary materials only as recommended by manufacturer of primary materials.

2.3 WALL COVERING MATERIALS

A. Vinyl Wall Covering: Provide integrally pigmented, opaque virgin vinyl calendared film vinyl wall covering material treated with mildew and antimicrobial additives and laminated to suitable backing. Comply with FS CCC-W-408D, Type II (except where Type I is specifically scheduled), Class 1, and CFFA W-101-D.

1. Stain-Resistant: Provide material for toilet rooms wet walls with delustered clear polyvinyl fluoride film not less than 0.0005 in (1/2 mil) thick as top coating complying with FS L-P-1040, Type I, Grade B, Class 2 (DuPont "Tedlar"). Do not include weight of stain-resistant coating as part of required vinyl coating weight or total fabric weight.

B. Textile Wall Coverings: Provide textile wall fabric affixed to suitable backing, and complying with requirements of ASTM F 793, Category III, Decorative with High Serviceability. Provide material which has been treated for stain and mildew resistance.

C. Wallpaper: Provide printed wallpaper complying with requirements of ASTM F 793, Category I, Decorative Only.

D. Wood Veneer Wall Covering:

1. Species and Graining: Refer to Basis of Design (Product Standard) portion of this Specification.
2. Matching and Numbering: Each sheet shall be architecturally matched and sheets numbered in sequence for perfect continuity on the wall (except Random or Staved grade).
3. Finish: Factory applied using wall-covering manufacturer's standard stain and polyurethane system.

a. Colors: Match Architect's sample.

2.4 ACCESSORY ITEMS

A. Adhesive: Mildew-resistant, nonstaining, strippable adhesive, for use with specific wall covering and substrate application; as recommended in writing by wall-covering manufacturer.

1. Adhesive shall have VOC content of 50 g/L or less when calculated according to 40 CFR 59, Subpart D (EPA Method 24).
2. Adhesive shall comply with the testing and product requirements of the California Department of Health Services' "Standard Practice for the Testing of Volatile Organic Emissions from Various Sources Using Small-Scale Environmental Chambers."

B. Wall Liner: Nonwoven, synthetic underlayment and adhesive as recommended by wall covering manufacturer.

PART 3 - EXECUTION

3.1 EXAMINATION

A. Acceptance of Surfaces and Conditions: Examine substrates to receive products and systems and associated work for compliance with requirements and other conditions affecting performance. Proceed only when unsatisfactory conditions have been corrected in a manner complying with Contract Documents. Starting work within a particular area will be construed as acceptance of surface conditions.

3.2 INSTALLATION, GENERAL

A. Installation Quality Standards: In addition to standards listed elsewhere, perform Work according to following, unless otherwise specified:

1. Respective manufacturer/fabricator's written installation instructions.
2. Accepted submittals.
3. Contract Documents.

3.3 PREPARATION

A. General: Comply with manufacturer's instructions, recommendations, and specifications for cleaning and surface preparation. Surfaces shall have no defects, contaminants, or errors which would result in poor or potentially defective installation or would cause latent defects in Work.

B. Acclimatize wall covering materials by removing them from packaging in the installation areas not less than 24 hours before installation.

C. Comply with manufacturer's written instructions for surface preparation.

D. Clean substrates of substances that could impair wall covering's bond, including mold, mildew, oil, grease, incompatible primers, and dirt. Prepare substrates to achieve a smooth, dry, clean surface free of flaking, unsound coatings, cracks, and defects.

1. Prime new gypsum board with primer recommended by wall covering manufacturer.

E. Remove hardware and hardware accessories, electrical plates and covers, light fixture trims, and similar items.

F. Wall Liner: Where recommended by wall covering manufacturer install wall liner to form smooth wrinkle-free surface for finished installation. Do not begin wall covering installation until wall liner has dried.

3.4 INSTALLATION OF WALL COVERINGS

A. Comply with wall coverings manufacturers' written installation instructions applicable to products and applications indicated, except where more stringent requirements apply.

B. Cut wall covering panels in roll number sequence. Change run numbers at partition breaks and corners only.

C. Install wall covering with no gaps or overlaps, no lifted or curling edges, and no visible shrinkage. Install seams vertical and plumb at least 6 in (150 mm) from outside corners and 3 in (75 mm) from inside corners. No horizontal seams are permitted.

D. Fully bond wall covering to substrate. Remove air bubbles, wrinkles, blisters, and other defects.

E. Trim edges for color uniformity, pattern match, and tight closure at seams and edges. Butt seams without any overlay or spacing between strips.

3.5 CLEANING

A. Remove excess adhesive at finished seams, perimeter edges, and adjacent surfaces. Use cleaning methods recommended by the wall covering manufacturer.

B. Replace strips that cannot be cleaned.

C. Reinstall hardware and hardware accessories, electrical plates and covers, light fixture trims, and similar items.

3.6 WALL COVERING SCHEDULE: as indicated in the interior finish legend.

END OF SECTION

SECTION 09 8433

ACOUSTICAL WALL PANELS

PART 1 - GENERAL

1.1 SUMMARY

A. Work required for this section includes acoustical wall panels and supplementary items necessary to complete their installation.

B. Refer to Division 9 ‘‘Fabric-Wrapped Panels’’ for custom-fabricated wall panels.

C. Refer to Division 9 Section "Stretched-Fabric Wall Systems" for site-upholstered wall systems.

D. Refer to Division 9 Section "Wall Coverings" for direct glued fabric wall covering.

1.2 ACTION SUBMITTALS

A. Product Data: For each type of product indicated.

B. Shop Drawings: Show fabrication and installation details for acoustical wall panels, including plans, elevations, sections, details, and attachments to other Work. Show orientation of fabric application, pattern matching, and seams.

C. Samples for Initial Selection: Manufacturer's color charts showing the full range of colors, textures, and patterns available for facing materials for each type of acoustical wall panel indicated. Include samples of installation devices and accessories.

D. Samples for Verification: 8 in (200 mm) by 11 in (275 mm) units of each type of acoustical wall panel indicated; in sets for each color, texture, and pattern specified for facing materials, showing the full range of variations expected in these characteristics. Include samples of installation devices and accessories.

1.3 INFORMATIONAL SUBMITTALS

A. Product Certificates: Signed by manufacturers of acoustical wall panels certifying that products furnished comply with requirements.

B. Product Test Reports: From a qualified testing agency indicating acoustical wall panels comply with requirements, based on comprehensive testing of current products.

1.4 CLOSEOUT SUBMITTALS

A. Maintenance Data: For acoustical wall panels and facings to include in maintenance manuals specified in Division 1.

1.5 MAINTENANCE MATERIAL SUBMITTALS

A. Furnish extra materials described below, before installation begins, that match products installed and that are packaged with protective covering for storage and identified with labels describing contents.

1. Acoustical Wall Panels: Full-size units equal to 2 percent of amount installed.

1.6 QUALITY ASSURANCE

A. Manufacturer Qualifications: A firm experienced in manufacturing acoustical wall panels similar to those indicated for this Project and with a record of successful in-service performance.

B. Testing Agency Qualifications: An independent testing agency, acceptable to authorities having jurisdiction, with the experience and capability to conduct the testing indicated, as documented according to ASTM E 548.

C. Fire-Test-Response Characteristics: Provide acoustical wall panels with the following surface-burning characteristics as determined by testing identical products per ASTM E 84 by UL or another testing and inspecting agency acceptable to authorities having jurisdiction. Identify acoustical wall panels with appropriate markings of applicable testing and inspecting agency.

1. Flame Spread: 25 or less.
2. Smoke Developed: 450 or less.

D. Mockup: Before installing acoustical wall panels, build mockup for each form of construction and finish required to verify selections made under sample Submittals and to demonstrate aesthetic effects and qualities of materials and execution. Build mockups to comply with the following requirements, using materials indicated for the completed Work:

1. Build mockup in the location and of the size indicated or, if not indicated, a minimum of three panels.
2. Notify Architect seven days in advance of the dates and times when mock-up will be installed.
3. Obtain Architect's acceptance of mock-ups before starting fabrication or installation.
4. Acceptance of mock-ups does not constitute acceptance of deviations from the Contract Documents contained in mock-ups unless such deviations are specifically noted by Contractor and accepted by Architect in writing.
5. Demolish and remove mock-ups when directed by Architect unless accepted to become part of the completed Work.

1.7 DELIVERY, STORAGE, AND HANDLING

A. Protect acoustical wall panels from excessive moisture when shipping, storing, and handling. Deliver in unopened bundles and store in a dry place with adequate air circulation. Do not deliver material to building until wet-work, such as concrete and plaster, has been completed and cured to a condition of equilibrium. Protect panel edges from crushing and impact.

1.8 PROJECT CONDITIONS

A. Environmental Limitations: Do not install acoustical wall panels until construction in spaces is complete and ambient temperature and humidity conditions are maintained at the levels indicated for Project when occupied for its intended use.

B. Air-Quality Limitations: Protect acoustical wall panels from exposure to airborne odors, such as tobacco smoke, and install panels under conditions free from odor contamination of ambient air.

C. Field Measurements: Where products and systems are indicated to fit walls and other construction, verify dimensions by field measurements before fabrication.

1.9 WARRANTY

A. Special Warranty: Written warranty, signed by manufacturer agreeing to repair or replace components of acoustical wall panel system that fail in performance, materials, or workmanship within specified warranty period. Failure in performance includes, but is not limited to, acoustical performance. Failure in materials includes, but is not limited to, sagging or distortion of facing or warping of core.

B. Warranty Period: Two years from date of Substantial Completion.

PART 2 - PRODUCTS

2.1 MATERIALS, GENERAL

A. Source Limitations for Acoustical Wall Panels: Obtain acoustical wall panels from one source with resources to provide products of consistent quality in appearance and physical properties.

2.2 ACOUSTICAL WALL PANELS

A. Provide manufacturer's standard panel construction consisting of facing material laminated to front face, edges, and back border of dimensionally stable, rigid glass fiber board core; with edges chemically hardened to reinforce panel perimeter against warpage and damage.

1. Panel Selection: Refer to Schedule at end of this Section.
2. Panel Selection: Refer to Division 1 Section “Design Selections”

B. Fabricate panels to sizes and configurations indicated; attach facing materials to cores to produce installed panels with visible surfaces fully covered and free from waves in fabric weave, wrinkles, sags, blisters, seams, adhesive, or other foreign matter.

1. Fabricate back-mounted panels in factory to exact sizes required to fit wall surfaces, based on field measurements of completed substrates indicated to receive acoustical wall panels.
2. Tailor corners and attach facing material so there are no seams or gathering of material.
3. Where fabrics with directional or repeating patterns, or directional weave, are indicated, mark fabric top and attach fabric in same direction.
4. Where fabric facings with seams are indicated, fabricate invisible seams and comply with Shop Drawings for location.

C. Dimensional Tolerances of Finished Units: Plus or minus 1/16 in (1.5 mm) for width length, straightness, squareness, and thickness.

D. Sound-Absorption Performance: Provide acoustical wall panels with minimum noise reduction coefficients indicated, as determined by testing per ASTM C 423 for mounting type specified under individual product requirements in the Acoustical Wall Panel Schedule.

E. Panel Characteristics: Comply with requirements indicated in the Acoustical Wall Panel Schedule.

F. Spline-Mounting Accessories: Manufacturer's standard concealed, extruded-aluminum or plastic connecting splines designed and fabricated for screw attachment to walls, with other moldings and trim for interior and exterior corners, leveling and base support, and as required. Provide panel manufacturer's standard factory-applied finish on exposed items in color as selected.

G. Back-Mounting Accessories: Manufacturer's standard or recommended accessories for securely mounting panels, of type and size indicated, to substrates provided; and complying with the following requirements:

1. Mechanically Mounted Edge-Reinforced Panels: Metal panel-clip and base-support bracket system consisting of two-part panel clips, with one part of each clip mechanically attached to back of panel and the other part to wall substrate, designed to support panels laterally; and base-support brackets designed to support full weight of panels; with both designed to allow for panel removal.

PART 3 - EXECUTION

3.1 EXAMINATION

A. Examine substrates surfaces to receive acoustical wall panels and associated work and conditions under which work will be installed. Do not proceed with installation until unsatisfactory conditions have been corrected in a manner acceptable to installer. Starting work within a particular area will be construed as installer's acceptance of surface conditions.

3.2 INSTALLATION

A. Install acoustical wall panels in locations indicated with vertical surfaces and edges plumb, top edges level and in alignment with other panels, and scribed to fit adjoining work accurately at borders and at penetrations. Comply with panel manufacturer's written instructions for installation of panels using type of mounting accessories indicated or, if not indicated, as recommended by manufacturer.

B. Construction Tolerances: As follows:

1. Variation from Plumb and Level: Plus or minus 1/16 in (1.5 mm).
2. Variation of Joints from Hairline: Not more than 1/16 in (1.5 mm).

3.3 CLEANING

A. Clip loose threads; remove pills and extraneous materials.

B. Clean panels with fabric facing, on completion of installation, to remove dust and other foreign materials according to manufacturer's written instructions.

C. Remove surplus materials, rubbish, and debris resulting from acoustical wall panel installation, on completion of the Work, and leave areas of installation in a neat and clean condition.

3.4 PROTECTION

A. Provide final protection and maintain conditions, in a manner acceptable to manufacturer and Installer, that ensure acoustical wall panels are without damage or deterioration at time of Substantial Completion.

B. Replace panels that cannot be cleaned and repaired, before time of Substantial Completion.

3.5 ACOUSTICAL WALL PANEL SCHEDULE: As scheduled in the Interior Finish Legend.

END OF SECTION

SECTION 09 9100

PAINTING

PART 1 - GENERAL

1.1 SUMMARY

A. Section Includes: Surface preparation and field painting of exposed interior items, exterior items and surfaces.

1. Surface preparation, priming, and finish coats specified in this Section are in addition to shop priming and surface treatment specified in other Sections.

B. Paint exposed surfaces, except where indicated that the surface or material is not to be painted or is to remain natural. If an item or a surface is not specifically mentioned, paint the item or surface the same as similar adjacent materials or surfaces. If a color of finish is not indicated, Architect will select from standard colors and finishes available.

1. Painting includes field painting of exposed bare and covered pipes and ducts, hangers, exposed steel and iron supports, and surfaces of mechanical and electrical equipment that do not have a factory-applied final finish.

C. Do not paint prefinished items, concealed surfaces, finished metal surfaces, operating parts, and labels, unless indicated otherwise.

1. Prefinished items include the following factory-finished components:

a. Prefinished wood doors.
b. Acoustical materials.
c. Prefinished Architectural woodwork and cabinets.
d. Elevator equipment.
e. Finished mechanical and electrical equipment.
f. Light fixtures.
g. Distribution cabinets.
h. Baked enamel coated items.
i. Fluorocarbon coated items.
j. Integral colored plaster.
k. Integral colored PVC.

2. Concealed surfaces include walls or ceilings in the following generally inaccessible spaces:

a. Foundation spaces.
b. Furred areas.
c. Ceiling plenums.
d. Utility tunnels.
e. Pipe spaces.
f. Duct shafts.
g. Elevator shafts.

3. Finished metal surfaces include the following:

    a. Anodized aluminum.
    b. Stainless steel.
    c. Chromium plate.
    d. Copper and copper alloys.
    e. Bronze and brass.

4. Operating parts include moving parts of operating equipment and the following:

    a. Valve and damper operators.
    b. Linkages.
    c. Sensing devices.
    d. Motor and fan shafts.

5. Labels: Do not paint over UL, FMG, or other code-required labels or equipment name, identification, performance rating, or nomenclature plates.

    a. Embossed UL labels may be used and painted where acceptable to authority having jurisdiction

D. Related Sections:

1. Division 09 Section "Gypsum Board Assemblies" for surface preparation of gypsum board assemblies.

1.2 DEFINITIONS

A. MPI Gloss Levels: MPI Gloss and Sheen Standard values are measured per ASTM D523, Method D and are as follows:

1. Gloss Level 1: Not more than 5 units at 60 degrees and 10 units at 85 degrees.
2. Gloss Level 2: Not more than 10 units at 60 degrees and 10 to 35 units at 85 degrees.
3. Gloss Level 3: 10 to 25 units at 60 degrees and 10 to 35 units at 85 degrees.
4. Gloss Level 4: 20 to 35 units at 60 degrees and not less than 35 units at 85 degrees.
5. Gloss Level 5: 35 to 70 units at 60 degrees.
6. Gloss Level 6: 70 to 85 units at 60 degrees.
7. Gloss Level 7: More than 85 units at 60 degrees.

B. Exterior Painting: Generally includes surfaces located in unconditioned spaces.

C. Interior Painting: Generally includes surfaces located in conditioned spaces.

1.3 ACTION SUBMITTALS

A. Product Data: Manufacturer's technical literature for each product and system indicated.

1. Include manufacturer's specifications for materials, finishes, installation instructions, and recommendations for maintenance.

B. Product List: For each product indicated, include the following:

1. Cross-reference to paint system and locations of application areas. Use same designations indicated on Drawings and in schedules.
2. Printout of current "MPI Approved Products List" for each product category specified, with the proposed product highlighted.

C. Samples for Verification: For each type of paint system and each color and gloss of topcoat indicated.

1. Submit Samples on rigid backing, 8 in (200 mm) square.
2. Step coats on Samples to show each coat required for system.
3. Label each coat of each Sample.
4. Label each Sample for location and application area.

1.4 INFORMATIONAL SUBMITTALS

A. Manufacturers Project Acceptance Document: Certification that products are approved, acceptable, suitable for use in specific locations, for specific details, and for applications indicated, specified, or required, and that warranty will be issued.

1. Certifications by manufacturer that products supplied comply with local regulations controlling use of volatile organic compounds (VOCs).

1.5 MAINTENANCE MATERIAL SUBMITTALS

A. Furnish extra materials described below that are from same production run (batch mix) as materials applied and that are packaged for storage and identified with labels describing contents.

1. Quantity: Furnish an additional 5 percent, but not less than 1 gal. (3.8 L) of each material and color applied.

1.6 QUALITY ASSURANCE

A. MPI Standards:

1. Products: Complying with MPI standards indicated and listed in "MPI Approved Products List."
2. Preparation and Workmanship: Comply with requirements in "MPI Architectural Painting Specification Manual" and "MPI Maintenance Repainting Manual" for products and paint systems indicated.

B. Mockups: Apply benchmark samples of each paint system indicated and each color and finish selected to verify preliminary selections made under sample submittals and to demonstrate aesthetic effects and set quality standards for materials and execution.

1. Install mockup in the location and of the size indicated or, if not indicated, as directed by Architect.

a. Architect will select one surface to represent surfaces and conditions for application of each paint system.

1) Vertical and Horizontal Surfaces: Provide samples of at least 100 sq. ft. (9 sq. m).

2) Other Items: Architect will designate items or areas required.
3) Demonstrate repair procedures for damaged surfaces.

b. Apply samples, according to requirements for the completed Work, after permanent lighting and other environmental services have been activated. Provide required sheen, color, and texture on each surface.
c. Final approval of color selections will be based on benchmark samples.

1) If preliminary color selections are not approved, apply additional benchmark samples of additional colors selected by Architect at no added cost to Owner.

2. Notify Architect seven days in advance of the dates and times when mock-up will be installed.
3. Obtain Architect's acceptance of mock-ups before starting fabrication or installation.
4. Acceptance of mock-ups does not constitute acceptance of deviations from the Contract Documents contained in mock-ups unless such deviations are specifically noted by Contractor and accepted by Architect in writing.
5. Demolish and remove mock-ups when directed by Architect unless accepted to become part of the completed Work.

1.7 PRE-INSTALLATION CONFERENCE

A. Pre-Installation Conference: Before Work begins, conduct conference at Project site.

1.8 DELIVERY, STORAGE, AND HANDLING

A. Store materials not in use in tightly covered containers in well-ventilated areas with ambient temperatures continuously maintained at not less than 45 deg F (7 deg C).

1. Maintain containers in clean condition, free of foreign materials and residue.
2. Remove rags and waste from storage areas daily.

1.9 PROJECT CONDITIONS

A. Apply paints only when temperatures of surfaces to be painted and surrounding air are between minimum and maximum range recommended by manufacturer.

B. Do not apply paints in snow, rain, fog, or mist; when relative humidity exceeds 85 percent; at temperatures less than 5 deg F (3 deg C) above the dew point; or to damp or wet surfaces.

1.10 COORDINATION

A. Coordinate installation of products and systems with interfacing and adjoining construction to provide a successful installation without failure.

PART 2 - PRODUCTS

2.1 MANUFACTURERS

A. Acceptable Manufacturers and Products: Subject to compliance with requirements of Contract Documents as judged by the Architect, provide product by one of manufacturers listed. If not listed, submit as substitution according to the Conditions of the Contract and Division 01 Section "Substitution Procedures".

1. Behr.
2. Benjamin Moore & Co.
3. Dunn-Edwards Corporation.
4. Kelly-Moore Paints.
5. PPG Paints.
6. Pratt & Lambert Paints.
7. Sherwin-Williams Company (The).

B. Color and Gloss: As scheduled or as indicated in Interior Finish Legend on drawings.

2.2 PAINT, GENERAL

A. MPI Standards: Products shall comply with MPI standards indicated and shall be listed in its "MPI Approved Products Lists."

B. Source Limitations: Obtain block fillers and field applied primers for each coating system from the same manufacturer as the finish coats.

C. Material Compatibility:

1. Provide materials for use within each paint system that are compatible with one another and substrates indicated, under conditions of service and application as demonstrated by manufacturer, based on testing and field experience.
2. For each coat in a paint system, provide products recommended in writing by manufacturers of topcoat for use in paint system and on substrate indicated.

PART 3 - EXECUTION

3.1 EXAMINATION

A. Acceptance of Surfaces and Conditions: Examine substrates to receive products and systems and associated work for compliance with requirements and other conditions affecting performance. Proceed only when unsatisfactory conditions have been corrected in a manner complying with Contract Documents. Starting work within a particular area will be construed as acceptance of surface conditions.

B. Coordination of Work: Review other Sections in which primers are provided to ensure compatibility of the total system for various substrates. On request, furnish information on characteristics of finish materials to shop applicators to ensure use of compatible primers.

3.2 INSTALLATION

A. Installation Quality Standards: In addition to standards listed elsewhere, perform work according to the following, unless otherwise specified in this Section:

1. Respective manufacturer's written installation instructions.
2. Approved submittals.
3. Contract Documents.
4. MPI Architectural Painting Specification Manual" or "MPI Maintenance Repainting Manual", as applicable.

3.3 PREPARATION

A. General: Comply with manufacturer's instructions, recommendations and specifications for cleaning and surface preparation. Surfaces shall have no defects or errors which would result in poor or potentially defective installation or would cause latent defects in Work.

B. Comply with manufacturer's written instructions and recommendations in "MPI Architectural Painting Specification Manual" and "MPI Maintenance Repainting Manual" applicable to substrates and paint systems indicated.

C. Remove plates, machined surfaces, and similar items already in place that are not to be painted. If removal is impractical or impossible because of size or weight of item, provide surface-applied protection before surface preparation and painting.

1. After completing painting operations, use workers skilled in the trades involved to reinstall items that were removed. Remove surface-applied protection if any.
2. Do not paint over labels of independent testing agencies or equipment name, identification, performance rating, or nomenclature plates, unless expressly permitted by authorities having jurisdiction for labels intended to be painted.

D. Clean substrates of substances that could impair bond of paints, including dirt, oil, grease, and incompatible paints and encapsulants.

1. Remove incompatible primers and reprime substrate with compatible primers as required to produce paint systems indicated.

E. Steel Substrates: Remove rust and loose mill scale. Clean using methods recommended in writing by paint manufacturer.

1. Touch up bare areas and shop-applied prime coats that have been damaged. Wire-brush, clean with solvents recommended by paint manufacturer, and touch up with same primer as the shop coat.

F. Galvanized-Metal Substrates: Remove grease and oil residue from galvanized sheet metal fabricated from coil stock by mechanical methods to produce clean, lightly etched surfaces that promote adhesion of subsequently applied paints.

1. Galvanized metal substrates shall not be chromate passivated. If galvanized metal is chromate passivated, provide surface preparation and primers recommended by manufacturer.

G. Wood Substrates:

1. Scrape and clean knots, and apply coat of knot sealer before applying primer.
2. Sand surfaces that will be exposed to view, and dust off.
3. Prime edges, ends, faces, undersides, and backsides of wood.
4. After priming, fill holes and imperfections in the finish surfaces with putty or plastic wood filler. Sand smooth when dried.

H. Gypsum Board Substrates: Do not begin paint application until finishing compound is dry and sanded smooth.

I. Plaster Substrates: Do not begin paint application until plaster is fully cured and dry.

J. Cotton or Canvas Insulation Covering Substrates: Remove dust, dirt, and other foreign material that might impair bond of paints to substrates.

3.4 APPLICATION

A. Apply paints according to manufacturer's written instructions.

1. Use applicators and techniques suited for paint and substrate indicated.
2. Paint surfaces behind movable items, equipment, and furniture same as similar exposed surfaces. Before final installation, paint surfaces behind permanently fixed items, equipment, or furniture with prime coat only.
3. Paint front and backsides of access panels, removable or hinged covers, and similar hinged items to match exposed surfaces.
4. Finish exterior doors on tops, bottoms, and side edges the same as exterior faces.
5. The number of coats and film thickness required are the same regardless of application method.
6. If sanding is required to produce a smooth, even surface according to manufacturer's written instructions, sand between applications.
7. Omit primer over metal surfaces that have been shop primed and touchup painted.
8. Allow sufficient time between successive coats to permit proper drying.

B. Tint each undercoat a lighter shade to facilitate identification of each coat if multiple coats of same material are to be applied. Tint undercoats to match color of topcoat, but provide sufficient difference in shade of undercoats to distinguish each separate coat. Tint per manufacturer's technical data for each type of primer or undercoat.

C. If undercoats or other conditions show through topcoat, apply additional coats until cured film has a uniform paint finish, color, and appearance.

D. Apply paints to produce surface films without cloudiness, spotting, holidays, laps, brush marks, roller tracking, runs, sags, ropiness, or other surface imperfections. Cut in sharp lines and color breaks.

E. Minimum Coating Thickness: Apply paint materials no thinner than manufacturer's recommended spreading rate to achieve total dry film thickness of the entire system as recommended by manufacturer.

3.5 MECHANICAL AND ELECTRICAL WORK PAINTING AND IDENTIFICATION

A. Painting of Fire Suppression, Plumbing, HVAC, Electrical, Communication, and Electronic Safety and Security Work to be done when exposed in the following locations:

1. Equipment Rooms.
2. Occupied Spaces.
3. Exterior Walls.
4. Roof Areas.

B. Equipment includes, but is not limited to, the following:

1. Uninsulated piping.
2. Pipe hangers and supports.
3. Tanks that do not have factory-applied final finishes.
4. Duct, equipment, and pipe insulation having cotton or canvas insulation covering or other paintable jacket material.
5. Equipment that is indicated to have a factory-primed finish for field painting.

C. Paint portions of internal surfaces of metal ducts, without liner, behind air inlets and outlets that are visible from occupied spaces. Paint with a flat, nonspecular black paint.

D. Pipe Identification: Conform to requirements of ANSI/ASME A13.1 "Scheme for the Identification of Piping Systems".

3.6 FIRE AND SMOKE BARRIER IDENTIFICATION

A. Fire and smoke resistant rated walls shall be effectively and permanently identified with signs, labels or stencils in a manner acceptable to authority having jurisdiction.

1. Identification shall be above decorative ceiling and in concealed spaces, on each segment of the wall and 6'-0" O.C. maximum on each side of wall.

3.7 CLEANING AND PROTECTION

A. At end of each workday, remove rubbish, empty cans, rags, and other discarded materials from Project site.

B. After completing paint application, clean spattered surfaces. Remove spattered paints by washing, scraping, or other methods. Do not scratch or damage adjacent finished surfaces.

C. Protect work of other trades against damage from paint application. Correct damage to work of other trades by cleaning, repairing, replacing, and refinishing, as approved by Architect, and leave in an undamaged condition.

D. Provide "Wet Paint" signs to protect newly painted finishes. Remove temporary protective wrappings provided by others to protect their work after completing painting operations.

E. At completion of construction activities of other trades, touch up and restore damaged or defaced painted surfaces to match approved samples.

3.8 EXTERIOR PAINTING SCHEDULE

A. Concrete Substrates, Nontraffic Surfaces:

1. Latex Over Alkali-Resistant Primer System: MPI EXT 3.1A.

a. Prime Coat: Primer, alkali resistant, water based, MPI #3; VOC 100 g/L max.

b. Intermediate Coat: Exterior latex matching topcoat.
c. Topcoat: Latex, exterior, flat (MPI Gloss Level 1), MPI #10; VOC 50 g/L max.
d. Topcoat: Latex, exterior, low sheen (MPI Gloss Level 3-4), MPI #15; VOC 100 g/L max.
e. Topcoat: Latex, exterior, semi-gloss (MPI Gloss Level 5), MPI #11; VOC 100 g/L max.
f. Topcoat: Latex, exterior, gloss (MPI Gloss Level 6), MPI #119; VOC 100 g/L max.

B. CMU Substrates:

1. Latex System: MPI EXT 4.2A.

a. Prime Coat: Block filler, latex, interior/exterior**,** MPI #4; VOC 100g/L max.
b. Intermediate Coat: Exterior latex matching topcoat.
c. Topcoat: Latex, exterior, flat (MPI Gloss Level 1), MPI #10; VOC 50 g/L max.
d. Topcoat: Latex, exterior, low sheen (MPI Gloss Level 3-4), MPI #15; VOC 100 g/L max.
e. Topcoat: Latex, exterior, semi-gloss (MPI Gloss Level 5), MPI #11; VOC 100 g/L max.
f. Topcoat: Latex, exterior, gloss (MPI Gloss Level 6), MPI #119; VOC 100 g/L max.
g. Gloss and Sheen: As scheduled or as indicated in Design Selections.

C. Stucco (Portland Cement Plaster) Substrates:

1. Latex over Alkali-Resistant, Water-Based Primer System: MPI EXT 9.1J.

a. Prime Coat: Primer, alkali resistant, water based, MPI #3; VOC 100 g/L max.
b. Intermediate Coat: Exterior latex matching topcoat.
c. Topcoat: Latex, exterior, flat (MPI Gloss Level 1), MPI #10; VOC 50 g/L max.
d. Topcoat: Latex, exterior, low sheen (MPI Gloss Level 3-4), MPI #15; VOC 100 g/L max.
e. Topcoat: Latex, exterior, semi-gloss (MPI Gloss Level 5), MPI #11; VOC 100 g/L max.
f. Topcoat: Latex, exterior, gloss (MPI Gloss Level 6), MPI #119; VOC 100 g/L max.
g. Gloss and Sheen: As scheduled or as indicated in Design Selections.

D. Steel Substrates (Ferrous Metal):

1. Water-Based, Light-Industrial Coating System: MPI EXT 5.1M

a. Prime Coat: Rust-inhibitive primer, (water based), primer, MPI #107, VOC 100 g/L max.
b. Intermediate Coat: Water-based, light-industrial coating, matching topcoat.
c. Topcoat: Light industrial coating, exterior, water based (MPI Gloss Level 3), MPI #161, VOC 100 g/L max.
d. Topcoat: Light industrial coating, exterior, water based, semi-gloss (MPI Gloss Level 5), MPI #163, VOC 100 g/L max.
e. Topcoat: Light industrial coating, exterior, water based, gloss (MPI Gloss Level 6), MPI #164, VOC 100 g/L max.
f. Gloss and Sheen: As scheduled or as indicated in Design Selections.

E. Galvanized-Metal Substrates:

1. Water-Based, Light-Industrial Coating System: MPI EXT 5.3J.

    a. Prime Coat: Waterborne galvanized-metal primer, MPI #134, VOC 100 g/L max.
    b. Intermediate Coat: Water-based, light-industrial coating, matching topcoat.
    c. Topcoat: Light industrial coating, exterior, water based (MPI Gloss Level 3), MPI #161, VOC 100 g/L max.
    d. Topcoat: Light industrial coating, exterior, water based, semi-gloss (MPI Gloss Level 5), MPI #163, VOC 100 g/L max.
    e. Topcoat: Light industrial coating, exterior, water based, gloss (MPI Gloss Level 6), MPI #164, VOC 100 g/L max.
    f. Gloss and Sheen: As scheduled or as indicated in Design Selections.

3.9 INTERIOR PAINTING SCHEDULE

A. Steel Substrates:

1. Institutional Low-Odor/VOC Latex System: MPI INT 5.1S.

    a. Prime Coat: Rust-inhibitive primer (water based), MPI #107, VOC 100 g/L max.
    b. Intermediate Coat: Institutional low-odor/VOC interior latex matching topcoat.
    c. Topcoat: Latex, interior, institutional low odor/VOC, flat (MPI Gloss Level 1), MPI #143, VOC 10 g/L max.
    d. Topcoat: Latex, interior, institutional low odor/VOC (MPI Gloss Level 2), MPI #144, VOC 10 g/L max.
    e. Topcoat: Latex, interior, institutional low odor/VOC (MPI Gloss Level 3), MPI #145, VOC 10 g/L max.
    f. Topcoat: Latex, interior, institutional low odor/VOC (MPI Gloss Level 4), MPI #146, VOC 10 g/L max.
    g. Topcoat: Latex, interior, institutional low odor/VOC, semi-gloss (MPI Gloss Level 5), MPI #147, VOC 10 g/L max.
    h. Topcoat: Latex, interior, institutional low odor/VOC, gloss (MPI Gloss Level 6), MPI #148, VOC 10 g/L max.
    i. Gloss and Sheen: As scheduled or as indicated in Design Selections.

B. Galvanized-Metal Substrates:

1. Institutional Low-Odor/VOC Latex System: MPI INT 5.3N.

    a. Prime Coat: Waterborne galvanized-metal primer, MPI #134, VOC 100 g/l max.
    b. Intermediate Coat: Institutional low-odor/VOC interior latex matching topcoat.
    c. Topcoat: Latex, interior, institutional low odor/VOC, flat (MPI Gloss Level 1), MPI #143, VOC 10 g/l max.
    d. Topcoat: Latex, interior, institutional low odor/VOC (MPI Gloss Level 2), MPI #144, VOC 10 g/L max.
    e. Topcoat: Latex, interior, institutional low odor/VOC (MPI Gloss Level 3), MPI #145, VOC 10 g/L max.
    f. Topcoat: Latex, interior, institutional low odor/VOC (MPI Gloss Level 4), MPI #146, VOC 10 g/L max.
    g. Topcoat: Latex, interior, institutional low odor/VOC, semi-gloss (MPI Gloss Level 5), MPI #147, VOC 10 g/l max.
    h. Topcoat: Latex, interior, institutional low odor/VOC, gloss (MPI Gloss Level 6), MPI #148, VOC 10 g/l max.
    i. Gloss and Sheen: As scheduled or as indicated in Design Selections.

C. Wood Panel Substrates: Including painted plywood, medium-density fiberboard, hardboard.

1. Institutional Low-Odor/VOC Latex System: MPI INT 6.4T.

a. Prime Coat: Interior latex-based wood primer, MPI #39, VOC 100 g/L max.
b. Intermediate Coat: Institutional low-odor/VOC interior latex matching topcoat.
c. Topcoat: Latex, interior, institutional low odor/VOC, flat (MPI Gloss Level 1), MPI #143, VOC 10 g/L max.
d. Topcoat: Latex, interior, institutional low odor/VOC (MPI Gloss Level 2), MPI #144, VOC 10 g/L max.
e. Topcoat: Latex, interior, institutional low odor/VOC (MPI Gloss Level 3), MPI #145, VOC 10 g/L max.
f. Topcoat: Latex, interior, institutional low odor/VOC (MPI Gloss Level 4), MPI #146, VOC 10 g/L max.
g. Topcoat: Latex, interior, institutional low odor/VOC, semi-gloss (MPI Gloss Level 5), MPI #147, VOC 10 g/L max.
h. Topcoat: Latex, interior, institutional low odor/VOC, gloss (MPI Gloss Level 6), MPI #148, VOC 10 g/L max.
i. Gloss and Sheen: As scheduled or as indicated in Design Selections.

D. Gypsum Board and Plaster (Gypsum and Portland Cement) Substrates:

1. Institutional Low-Odor/VOC Latex System: MPI INT 9.2M.

a. Prime Coat: Institutional low-odor/VOC primer/sealer, MPI 149, VOC 10 g/L max.
b. Intermediate Coat: Institutional low-odor/VOC interior latex matching topcoat.
c. Topcoat: Latex, interior, institutional low odor/VOC, flat (MPI Gloss Level 1), MPI #143, VOC 10 g/L max.
d. Topcoat: Latex, interior, institutional low odor/VOC (MPI Gloss Level 2), MPI #144, VOC 10 g/L max.
e. Topcoat: Latex, interior, institutional low odor/VOC (MPI Gloss Level 3), MPI #145, VOC 10 g/L max.
f. Topcoat: Latex, interior, institutional low odor/VOC (MPI Gloss Level 4), MPI #146, VOC 10 g/L max.
g. Topcoat: Latex, interior, institutional low odor/VOC, semi-gloss (MPI Gloss Level 5), MPI #147, VOC 10 g/L max.
h. Topcoat: Latex, interior, institutional low odor/VOC, gloss (MPI Gloss Level 6), MPI #148, VOC 10 g/L max.
i. Gloss and Sheen: As scheduled or as indicated in Design Selections.
j. Gloss and Sheen: As scheduled or as indicated in Design Selections.

E. Cotton or Canvas Insulation-Covering Substrates: Including pipe and duct coverings.

1. Institutional Low-Odor/VOC Latex System: MPI INT 10.1D.

a. Prime Coat: Institutional low-odor/VOC primer/sealer, MPI #50, VOC 100 g/L max.
b. Intermediate Coat: Institutional low-odor/VOC interior latex matching topcoat.
c. Topcoat: Latex, interior, institutional low odor/VOC, flat (MPI Gloss Level 1), MPI #143, VOC 10 g/L max.
d. Topcoat: Latex, interior, institutional low odor/VOC (MPI Gloss Level 2), MPI #144, VOC 10 g/L max.
e. Topcoat: Latex, interior, institutional low odor/VOC (MPI Gloss Level 3), MPI #145, VOC 10 g/L max.

f. Topcoat: Latex, interior, institutional low odor/VOC (MPI Gloss Level 4), MPI #146, VOC 10 g/L max.
g. Topcoat: Latex, interior, institutional low odor/VOC, semi-gloss (MPI Gloss Level 5), MPI #147, VOC 10 g/L max.
h. Topcoat: Latex, interior, institutional low odor/VOC, gloss (MPI Gloss Level 6), MPI #148, VOC 10 g/L max.
i. Gloss and Sheen: As scheduled or as indicated in Design Selections.

3.10 PAINTING FINISH SCHEDULE

A. See Interior Finish Legend on drawings.

END OF SECTION

SECTION 09 9653

ELASTOMERIC COATINGS

PART 1 - GENERAL

1.1 SUMMARY

A. Section Includes: Elastomeric coatings and supplementary items necessary for installation.

1.2 ACTION SUBMITTALS

A. Product Data: Manufacturer's technical literature for each product and system indicated.

1. Include manufacturer's specifications for materials, finishes, construction details, installation instructions, and recommendations for maintenance.
2. Include manufacturer's technical information and instructions for handling, storing, and applying each coating material proposed for use.

B. Samples for Initial Selection: Manufacturer's color charts showing the full range of colors available for each type of finish-coat material indicated.

1. After color selection, the Architect will return color chips indicating colors selected for surfaces to be coated.

C. Samples for Verification Purposes: Of each color and material to be applied, with texture to simulate actual conditions, on representative samples of actual substrate.

1. Submit samples on same type of substrate as that to receive application, 8 in (200 mm) square.
2. Step coats on samples to show each separate coat, including primers and block fillers as applicable. Use representative colors when preparing samples for review. Resubmit until required sheen, color, and texture are achieved.
3. Provide a list of materials and applications for each coat of each sample. Label each sample for location and application.

D. Product List: For each product indicated, including the following:

1. Cross-reference to coating system and locations of application areas. Use same designations indicated on Drawings and in schedules.
2. Manufacturer's recommended spreading rate for each separate coat, including primers and block fillers, for each type of substrate as applicable.

1.3 INFORMATIONAL SUBMITTALS

A. Manufacturer's Project Acceptance Document: Certification by the manufacturer that its product(s) are approved, acceptable, suitable for use in specific locations, for specific details, and for applications indicated, specified, or required and that a warranty will be issued.

B. Qualification Data:

1. For firms and persons specified in "Quality Assurance" to demonstrate their capabilities and experience. Include list of completed projects.

C. Warranty: Sample of warranty.

1. Provide manufacturer's written warranty covering materials and installation (labor) stating obligations, remedies, limitations and exclusions.

1.4 CLOSEOUT SUBMITTALS

A. Maintenance Data: To include in maintenance manuals.

1.5 MAINTENANCE MATERIAL SUBMITTALS

A. Extra Materials: Furnish extra elastomeric coating materials, from the same production run as the materials applied, in quantities described below. Package materials in unopened, factory-sealed containers for storage and identify with labels describing contents. Deliver extra materials to the Owner.

1. Quantity: Furnish the Owner with an additional 5 percent, but not less than 1 gal. (3.8 L) of each color applied.

1.6 QUALITY ASSURANCE

A. Manufacturer Qualifications: Manufacturer with not less than 10 years of experience in the successful production and in-service performance of products and systems similar to scope of this Project.

B. Applicator Qualifications:

1. Experience: Installer's personnel with not less than 5 years of experience in the successful performance of Work similar to scope of this Project.
2. Supervision: Installer shall maintain a competent supervisor at Project while the Work is in progress, and who has not less than 5 years of experience installing products and systems similar to scope of this Project.

C. Mock-ups: Prior to fabrication and installation, build mock-up for each form of construction and finish required to verify selections made under sample Submittals and to demonstrate aesthetic effects and qualities of materials and execution. Build mock-up using materials indicated for the completed Work.

1. Build mock-up in the location and of the size indicated or, if not indicated, as directed by Architect. Contractor shall provide structural support framework.

a. Show typical components, attachments to building structure, and requirements of installation.

2. Notify Architect seven days in advance of the dates and times when mock-up will be installed.
3. Obtain Architect's acceptance of mock-ups before starting fabrication or installation.
4. Acceptance of mock-ups does not constitute acceptance of deviations from the Contract Documents contained in mock-ups unless such deviations are specifically noted by Contractor and accepted by Architect in writing.

5. Demolish and remove mock-ups when directed by Architect unless accepted to become part of the completed Work.

1.7 PRE-INSTALLATION CONFERENCE

A. Pre-Installation Conference: Before Work begins, conduct conference at Project site.

1. Participants:

a. Architect.
b. Contractor, including superintendent.
c. Installer, including project manager and supervisor.
d. If requested, Manufacturer's qualified technical representative.
e. Installers of other construction interfaced with Work.

2. Minimum Agenda: Installer shall demonstrate understanding of the Work required by describing detailed procedures for preparing, installing, and cleaning the Work. Demonstration shall include, but not be limited to, following topics:

a. Tour representative areas of Work, inspect and discuss condition of substrate, and other preparatory work performed by other trades.
b. Review Contract Document requirements.
c. Review approved submittals.
d. Review inspection and testing requirements.
e. Review environmental conditions and procedures for coping with unfavorable conditions.
f. Resolve deviations or differences between Contract Documents and the manufacturer's specifications.

3. Record discussions, including decisions and agreements, and prepare report.

1.8 DELIVERY, STORAGE, AND HANDLING

A. Deliver materials in manufacturer's original, unopened, undamaged containers with identification labels intact.

B. Store materials not in use in tightly covered containers in well-ventilated areas with ambient temperatures continuously maintained at not less than 45 deg F (7 deg C).

1. Maintain containers in clean condition, free of foreign materials and residue.
2. Remove rags and waste from storage areas daily.

1.9 PROJECT CONDITIONS

A. Apply coatings only when temperature of surfaces to be coated and ambient air temperatures are between 50 and 90 deg F (10 and 32 deg C) unless otherwise permitted by manufacturer's written instructions.

B. Do not apply coatings in snow, rain, fog, or mist; when relative humidity exceeds 85 percent; or at temperatures less than 5 deg F (-15 deg C) above the dew point; or to damp or wet surfaces.

1. Allow wet surfaces to dry thoroughly and attain temperature and conditions recommended by manufacturer before starting or continuing coating operation.

C. Do not apply elastomeric coatings over sealant joints.

1.10 COORDINATION

A. Coordinate installation of products and systems with interfacing and adjoining construction to provide a successful installation without failure.

1.11 WARRANTY

A. Manufacturer's Warranty: Furnish manufacturer's written material and labor warranty signed by an authorized representative using manufacturer's standard form agreeing to furnish materials and labor required to repair or replace work which exhibits material defects caused by manufacture or design and installation of product. "Defects" is defined to include but not limited to deterioration or failure to perform as required and water penetration through the coating.

1. Warranty Period: Manufacturer shall warrant the products to be free from material and labor Defects for a period of 5 years from date of Substantial Completion

B. Applicator's Warranty: Furnish applicator's written workmanship warranty signed by an authorized representative using applicator's standard form agreeing to provide labor required to repair or replace work which exhibits workmanship defects. "Defects" is defined to include but not limited to deterioration or failure to perform as required and water penetration through the coating.

1. Warranty Period: Applicator shall warrant the application to be free from workmanship Defects for a period of 2 years from date of Substantial Completion.

PART 2 - PRODUCTS

2.1 MANUFACTURERS AND PRODUCTS

A. Acceptable Manufacturers and Products: Subject to compliance with requirements of Contract Documents as judged by the Architect, provide product by one of manufacturers listed. If not listed, submit as substitution according to the Conditions of the Contract and Division 01 Section "Substitution Procedures".

1. AkzoNobel, dba Glidden Professional (formerly ICI Paints); Decra-Flex Elastomeric Coating.
2. BASF Building Systems; MasterProtect EL 750 (Formerly Thoro Thorolastic or Sonneborn Flexcoat).
3. Benjamin Moore & Co.; Moorlastic.
4. Euclid Chemical Company; Tamms Tammolastic.
5. ICI Paints; Decra-Flex Elastomeric Coating.
6. PPG Industries, Inc.; Pitt-Flex
7. Sherwin-Williams Company; Sherlastic Elastomeric Coating.
8. Sto Corporation; StoLastic.

2.2 MATERIALS, GENERAL

A. Single Source Responsibility: Furnish each type of product from single manufacturer. Provide secondary materials only as recommended by manufacturer of primary materials.

B. Material Compatibility: Provide elastomeric finish coat system materials and related accessory materials that are compatible with one another and the substrates indicated under conditions of service and application, as demonstrated by elastomeric coating manufacturer based on testing and field experience.

1. For each material or coat, provide products and spreading rates recommended in writing by elastomeric coating manufacturer for use on substrate indicated.

2.3 PERFORMANCE REQUIREMENTS

A. Provide elastomeric coating systems with the following properties as determined by the test methods indicated:

1. Elongation at Break: Not less than 300 percent at 77 deg F (25 deg C) and not less than 50 percent at 0 deg F (-17.7 deg C) according to ASTM D 412.
2. Low-Temperature Flexibility: Passes a 1/8 in (3 mm) mandrel at -30 deg F (-34 deg C) according to ASTM D 522.
3. Moisture-Vapor Transmission: 10 to 12 perms according to ASTM E 96.
4. Wind-Driven Rain Resistance: Passes according to TT-C-555B.
5. Tensile Properties: Tensile strength of 220 psi (1.5 MPa) according to ASTM D 412.
6. Crack Bridging per PR EN 1062-7:

    a. At -77 deg F (-60 deg C): 12 mils (0.3 microns).
    b. At 32 deg F (0 deg C): 19.5 mils (0.5 microns).
    c. At 73 deg F (23 deg C): 27 mils (0.7 microns).

7. Pull-Off Strength Adhesion: 210 psi (1.4 MPa) according to ASTM D 4541.
8. Minimum Solids Content by Volume: Not less than 50 percent according to ASTM D 5201.

2.4 ELASTOMERIC COATING SYSTEM

A. Description: High-build, water-based, 100% acrylic, pigmented elastomeric waterproof coating system, designed to bridge dynamic cracks and retain flexibility.

1. Elastomeric Finish Coats: Minimum two coats with a total dry film thickness per manufacturer's recommendation for condition of substrate.

B. Colors and Textures: Provide the following colors and textures of the finished elastomeric coating system:

1. As scheduled or as indicated in Design Selections.

2.5 ACCESSORY MATERIALS

A. Provide the following related accessory materials necessary for complete installation of elastomeric coating system as recommended by elastomeric coating manufacturer for substrate conditions and application requirements.

B. Crack Filler: Elastomeric coating manufacturer's recommended, factory-formulated crack filler or sealants, including crack filler primer, compatible with substrate and other materials indicated.

C. Primer: Elastomeric coating manufacturer's recommended, factory-formulated, alkali-resistant primer compatible with substrate and other materials indicated.

D. Concrete Unit Masonry Block Filler: Elastomeric coating manufacturer's recommended, factory-formulated, high-performance latex block filler compatible with substrate and other materials indicated.

PART 3 - EXECUTION

3.1 EXAMINATION

A. Acceptance of Surfaces and Conditions: Examine substrates to receive products and systems and associated work for compliance with requirements and other conditions affecting performance. Proceed only when unsatisfactory conditions have been corrected in a manner complying with Contract Documents. Starting work within a particular area will be construed as acceptance of surface conditions.

B. Begin coating only when moisture content of substrate is 12% or less when measured with an electronic moisture meter.

C. Begin coating no sooner than 28 days after substrate is constructed and is visually dry on both sides.

D. Substrates:

1. New: Verify that substrate is within the range of alkalinity recommended by elastomeric coating manufacturer.
2. Existing: Verify suitability of substrates including surface conditions and compatibility with existing finishes and primers.

3.2 APPLICATION, GENERAL

A. Application Quality Standards: In addition to standards listed elsewhere, perform Work according to following, unless otherwise specified:

1. Respective manufacturer’s written application instructions.
2. Accepted submittals.
3. Contract Documents.

3.3 PREPARATION

A. General: Comply with manufacturer’s instructions, recommendations, and specifications for cleaning and surface preparation. Surfaces shall have no defects, contaminants, or errors which would result in poor or potentially defective application or would cause latent defects in Work.

B. Remove items already installed that are not to be coated. If removal is impractical or impossible because of size or weight of item, provide surface-applied protection before surface preparation and coating. After completing coating operations in each area, reinstall items removed, using workers skilled in trades involved.

C. Cleaning: Before applying coatings or other surface treatments, clean substrates of substances that could impair bond of coating systems. Remove oil and grease before cleaning. Schedule cleaning and coating application so dust and other contaminates will not fall on wet, newly coated surfaces.

D. Surface Preparation: Clean and prepare surfaces to be coated according to manufacturer's written instructions for the particular substrate conditions and as specified.

1. Cementitious Surfaces: Prepare concrete, concrete masonry, stucco, and similar surfaces to receive elastomeric coatings. Remove efflorescence, chalk, dust, dirt, release agents, grease, oils, and similar conditions by water blasting followed by a clear water rinse.

    a. Remove mildew and neutralize surfaces according to manufacturer's written recommendations before patching materials are applied.
    b. Roughen as required to remove glaze. Use abrasive blast-cleaning methods if recommended by coating manufacturer.
    c. If hardeners or sealers have been used to improve concrete curing, use mechanical methods for surface preparation.
    d. Determine alkalinity and moisture content of surfaces to be coated by performing appropriate tests. Do not apply coatings over surfaces where moisture content exceeds that permitted in manufacturer's written instructions.

2. Crack Repair: Fill cracks according to manufacturer's written recommendations before coating surfaces.
3. Deep Hairline Cracks: Remove dust and dirt from around cracks. Remove mildew by sterilizing before filling. Apply manufacturer's recommended primer to cracks before patching. If shrinkage occurs after applying crack filler, apply additional filler material to cracks before initially applying elastomeric coatings.

    a. Cracks up to 1/16 in (1.5 mm): Clean surface around cracks. Apply primer penetrating cracks as deeply as possible, overflowing crack 2 in (50 mm) on each side. When primer is dry, apply crack filler forced well into cracks. Smooth edges around cracks over primed area. Allow for shrinkage when applying.
    b. Cracks up to 3/8 in (10 mm): Open cracks to 1/4 in to 3/8 in (6 mm to 10 mm) wide and 1/8 in (3 mm) deep. Clean cracks and surrounding area removing dust, dirt, and other impurities. Apply primer to obtain uniform coverage and spread approximately 2 in (50 mm) on each side of cracks. Fill cracks with manufacturer's recommended crack filler, and allow for shrinkage. If excessive shrinkage occurs, reapply crack filler.

E. Material Preparation: Mix and prepare materials according to coating manufacturer's written instructions.

1. Stir materials before application to produce a mixture of uniform density. Stir as required during application. Do not stir surface film that may form into material. Remove film and, if necessary, strain coating material before using.
2. If manufacturer permits thinning, use only thinners recommended by manufacturer, and only within limits recommended by manufacturer.

3.4 APPLICATION OF ELASTOMERIC COATINGS

A. General: Apply elastomeric coatings to exposed surfaces indicated, according to manufacturer's written instructions.

B. Labels: Do not paint over UL, FM, or other code-required labels or equipment name, identification, performance rating, or nomenclature plates.

C. Coating: Apply first coat to surfaces that have been cleaned, pretreated, or otherwise prepared for painting as soon as practicable after preparation and before subsequent surface deterioration.

1. The number of coats and film thickness required are the same regardless of application method.
2. Do not apply succeeding coats until previous coat has cured as recommended by manufacturer.
3. If undercoats or other conditions show through final coat, apply additional coats until coating film is of uniform finish, color, and appearance.
4. Ensure that surfaces, including edges, corners, and crevices receive a dry film thickness equivalent to that of flat surfaces.
5. Allow sufficient time between successive coats to permit proper drying.
6. Do not recoat surfaces where application of another coat would cause undercoat to lift or lose adhesion.

D. Application Procedures: Apply elastomeric coatings by roller or spray according to manufacturer's written instructions.

1. Rollers: Use professional-quality quick-release rollers of carpet, velvet back, or high-pile sheep's wool covers as recommended by the manufacturer for material and texture required.
2. Spray Equipment: Use airless spray equipment with orifice size as recommended by the manufacturer for material and texture required.
3. Minimum Coating Thickness: Apply each material no thinner than manufacturer's recommended spreading rate. Provide total dry film thickness as recommended by the manufacturer.
4. Wherever spray application is used, apply each coat to provide adequate coverage. Do not double back with spray equipment, building up film thickness of 2 coats in 1 pass.

E. Block Fillers: Apply block fillers to concrete masonry block at a rate to ensure complete coverage with pores filled.

F. Prime Coats: If recommended by the manufacturer, apply primer to substrate being coated before applying finish coats. Apply at a rate to ensure complete coverage.

G. Roller Application: Keep the cover wet at all times; do not dry roll. Work in sections. Lay on required amount of material, working material into grooves and rough areas; then level material, working it into surface.

H. Spray Application: Use spray equipment for application only when permitted by manufacturer's written recommendations and authorities having jurisdiction. Wherever spray application is used, do not double back with spray equipment to build up film thickness of two coats in one pass.

I. Completed Work: Match accepted samples for color, texture, and coverage. Remove, refinish, or recoat work not complying with specified requirements.

3.5 FIELD QUALITY CONTROL

A. Manufacturer's Field Service: Manufacturer's qualified technical representative shall periodically inspect Work to ensure installation is proceeding in accordance with manufacturer's designs, recommendations, instructions, and warranty requirements. Representative shall submit written reports of each visit indicating observations, findings, and conclusions of inspection.

1. Manufacturer's Technical Representative Qualifications: Direct employee of technical services department of manufacturer with experience in providing recommendations, observations, evaluations, and problem diagnostics.

3.6 CLEANING

A. At end of each workday, remove rubbish, empty cans, rags, and other discarded materials from the Project site.

B. After completing coating work, clean glass and spattered surfaces. Remove spattered coatings by washing, scraping, or other methods, being careful not to scratch or damage adjacent finished surfaces.

3.7 PROTECTION

A. Protect work of other trades from damage whether being coated or not. Correct damage by cleaning, repairing, replacing, and recoating as approved by the Architect. Leave in an undamaged condition.

B. Provide "Wet Paint" signs to protect newly coated finishes. Remove temporary protective wrappings provided by others to protect their work after completing coating operations.

C. After construction activities of other trades are complete, touch up and restore damaged or defaced coated surfaces.

3.8 ELASTOMERIC COATING SCHEDULE

A. Color and Texture: As selected by Architect from full range of manufacturer's colors and textures

END OF SECTION

SECTION 09 9663

TEXTURED ACRYLIC COATINGS

PART 1 - GENERAL

1.1 SUMMARY

A. Section Includes: Textured acrylic coatings and supplementary items necessary for installation.

1.2 ACTION SUBMITTALS

A. Product Data: Manufacturer's technical literature for each product and system indicated.

1. Include manufacturer's specifications for materials, finishes, construction details, installation instructions, and recommendations for maintenance.
2. Include manufacturer's technical information and instructions for handling, storing, and applying each coating material proposed for use.

B. Samples for Initial Selection: Manufacturer's color charts showing the full range of colors available for each type of finish-coat material indicated.

1. After color selection, the Architect will return color chips indicating colors selected for surfaces to be coated.

C. Samples for Verification Purposes: Of each color and material to be applied, with texture to simulate actual conditions, on representative samples of actual substrate.

1. Submit samples on same type of substrate as that to receive application, 8 in (200 mm) square.
2. Step coats on samples to show each separate coat, including primers and block fillers as applicable. Use representative colors when preparing samples for review. Resubmit until required sheen, color, and texture are achieved.
3. Provide a list of materials and applications for each coat of each sample. Label each sample for location and application.

D. Product List: For each product indicated, including the following:

1. Cross-reference to coating system and locations of application areas. Use same designations indicated on Drawings and in schedules.
2. Manufacturer's recommended spreading rate for each separate coat, including primers and block fillers as applicable, for each type of substrate as applicable.

1.3 INFORMATIONAL SUBMITTALS

A. Manufacturer's Project Acceptance Document: Certification by the manufacturer that its product(s) are approved, acceptable, suitable for use in specific locations, for specific details, and for applications indicated, specified, or required and that a warranty will be issued.

B. Qualification Data:

1. For firms and persons specified in "Quality Assurance" to demonstrate their capabilities and experience. Include list of completed projects.

C. Warranty: Sample of warranty.

1. Provide manufacturer's written warranty covering materials and installation (labor) stating obligations, remedies, limitations and exclusions.

1.4 CLOSEOUT SUBMITTALS

A. Maintenance Data: To include in maintenance manuals.

1.5 MAINTENANCE MATERIAL SUBMITTALS

A. Extra Materials: Furnish extra textured acrylic coating materials, from the same production run as the materials applied, in quantities described below. Package materials in unopened, factory-sealed containers for storage and identify with labels describing contents. Deliver extra materials to the Owner.

1. Quantity: Furnish the Owner with an additional 5 percent, but not less than 1 gal. (3.8 L) of each color applied.

1.6 QUALITY ASSURANCE

A. Manufacturer Qualifications: Manufacturer with not less than 10 years of experience in the successful production and in-service performance of products and systems similar to scope of this Project.

B. Applicator Qualifications:

1. Experience: Installer's personnel with not less than 5 years of experience in the successful performance of Work similar to scope of this Project.
2. Supervision: Installer shall maintain a competent supervisor at Project while the Work is in progress, and who has not less than 5 years of experience installing products and systems similar to scope of this Project.

C. Mock-ups: Prior to fabrication and installation, build mock-up for each form of construction and finish required to verify selections made under sample Submittals and to demonstrate aesthetic effects and qualities of materials and execution. Build mock-up using materials indicated for the completed Work.

1. Build mock-up in the location and of the size indicated or, if not indicated, as directed by Architect. Contractor shall provide structural support framework.

a. Show typical components, attachments to building structure, and requirements of installation.

2. Notify Architect seven days in advance of the dates and times when mock-up will be installed.
3. Obtain Architect's acceptance of mock-ups before starting fabrication or installation.
4. Acceptance of mock-ups does not constitute acceptance of deviations from the Contract Documents contained in mock-ups unless such deviations are specifically noted by Contractor and accepted by Architect in writing.

5. Demolish and remove mock-ups when directed by Architect unless accepted to become part of the completed Work.

1.7 PRE-INSTALLATION CONFERENCE

A. Pre-Installation Conference: Before Work begins, conduct conference at Project site.

1. Participants:

a. Architect.
b. Contractor, including superintendent.
c. Installer, including project manager and supervisor.
d. If requested, Manufacturer's qualified technical representative.
e. Installers of other construction interfaced with Work.

2. Minimum Agenda: Installer shall demonstrate understanding of the Work required by describing detailed procedures for preparing, installing, and cleaning the Work. Demonstration shall include, but not be limited to, following topics:

a. Tour representative areas of Work, inspect and discuss condition of substrate, and other preparatory work performed by other trades.
b. Review Contract Document requirements.
c. Review approved submittals.
d. Review inspection and testing requirements.
e. Review environmental conditions and procedures for coping with unfavorable conditions.
f. Resolve deviations or differences between Contract Documents and the manufacturer's specifications.

3. Record discussions, including decisions and agreements, and prepare report.

1.8 DELIVERY, STORAGE, AND HANDLING

A. Deliver materials in manufacturer's original, unopened, undamaged containers with identification labels intact.

B. Store materials not in use in tightly covered containers in well-ventilated areas with ambient temperatures continuously maintained at not less than 45 deg F (7 deg C).

1. Maintain containers in clean condition, free of foreign materials and residue.
2. Remove rags and waste from storage areas daily.

1.9 PROJECT CONDITIONS

A. Apply coatings only when temperature of surfaces to be coated and ambient air temperatures are between 50 and 90 deg F (10 and 32 deg C) unless otherwise permitted by manufacturer's written instructions.

B. Do not apply coatings in snow, rain, fog, or mist; when relative humidity exceeds 85 percent; or at temperatures less than 5 deg F (-15 deg C) above the dew point; or to damp or wet surfaces.

1. Allow wet surfaces to dry thoroughly and attain temperature and conditions recommended by manufacturer before starting or continuing coating operation.

C. Do not apply textured acrylic coatings over sealant joints.

1.10 COORDINATION

A. Coordinate installation of products and systems with interfacing and adjoining construction to provide a successful installation without failure.

1.11 WARRANTY

A. Manufacturer's Warranty: Furnish manufacturer's written material and labor warranty signed by an authorized representative using manufacturer's standard form agreeing to furnish materials and labor required to repair or replace work which exhibits material defects caused by manufacture or design and installation of product. "Defects" is defined to include but not limited to deterioration or failure to perform as required and water penetration through the coating.

1. Warranty Period: Manufacturer shall warrant the products to be free from material and labor Defects for a period of 5 years from date of Substantial Completion

B. Applicator's Warranty: Furnish applicator's written workmanship warranty signed by an authorized representative using applicator's standard form agreeing to provide labor required to repair or replace work which exhibits workmanship defects. "Defects" is defined to include but not limited to deterioration or failure to perform as required and water penetration through the coating.

1. Warranty Period: Applicator shall warrant the application to be free from workmanship Defects for a period of 2 years from date of Substantial Completion.

PART 2 - PRODUCTS

2.1 MANUFACTURERS AND PRODUCTS

A. Acceptable Manufacturers and Products: Subject to compliance with requirements of Contract Documents as judged by the Architect, provide product by one of manufacturers listed. If not listed, submit as substitution according to the Conditions of the Contract and Division 01 Section "Substitution Procedures".

1. BASF Building Systems; MasterProtect HB 400 (Formerly Thoro Thorocoat Tex).
2. Euclid Chemical Company; Tamms Tammscoat.
3. PPG Industries, Inc.; Perma-Crete Texture Finishings
4. Sherwin-Williams Company; UltraCrete Textured Masonry Topcoat.
5. Textured Coatings of America, Inc.; Tex-Cote 600 Textured Coating.

2.2 MATERIALS, GENERAL

A. Single Source Responsibility: Furnish each type of product from single manufacturer. Provide secondary materials only as recommended by manufacturer of primary materials.

B. Material Compatibility: Provide textured acrylic finish coat system materials and related accessory materials that are compatible with one another and the substrates indicated under conditions of service and application, as demonstrated by textured acrylic coating manufacturer based on testing and field experience.

1. For each material or coat, provide products and spreading rates recommended in writing by textured acrylic coating manufacturer for use on substrate indicated.

2.3 PERFORMANCE REQUIREMENTS

A. Provide textured acrylic coating systems with the following properties as determined by the test methods indicated:

1. Flexibility: No cracking per ASTM D 522, 1 in (25 mm) mandrel.
2. Wind-Driven Rain Resistance: Passes according to TT-C-555B.
3. Moisture-Vapor Transmission: 6 perms per ASTM E 96, Procedure A.
4. Accelerated Weathering at 5,000 Hours: Passes per ASTM G 53.
5. Salt Fog Resistance: Passes per ASTM B 117 at 300 hours.
6. Heat Age Stability: Passes per Fed Standard 141 C #3019.1. 30 days at 140 deg F (60 deg C).
7. Fungus Resistance: No growth per ASTM D3273.
8. Minimum Solids Content by Volume: Not less than 50 percent according to ASTM D 5201.

2.4 TEXTURED ACRYLIC COATING SYSTEM

A. Description: High-build, water-based, 100% acrylic, pigmented elastomeric, waterproof coating system with graded aggregate according to texture selection.

1. Textured Acrylic Finish Coats: Minimum two coats with a total dry film thickness per manufacturer's recommendation for condition of substrate.

B. Colors and Textures: Provide the following colors and textures of the finished textured acrylic coating system:

1. As scheduled or as indicated in Design Selections.

2.5 MODIFIED CEMENT WATERPROOFING

A. Modified Cement Waterproofing:

1. Product Description: Proprietary prepackaged blend of dry cementitious and other ingredients for mixing with polymer admixture to produce a waterproof coating suitable for vertical applications behind Portland cement plaster; with following minimum physical properties:

    a. Permeability: Minimum 12 perms according to ASTM E 96 / E 96M.
    b. Salt Spray Resistance: No defect according to ASTM B 117.
    c. Artificial Weathering: No failure after 5,000 hours according to ASTM G 26.

2. Basis of Design: BASF; MasterSeal 581 with MasterEmaco A 660 (Formerly Thoroseal with Acryl 60).
3. Manufacturers:

    a. AQUAFIN, Inc.
    b. BASF
    c. Sika Corp., Inc.
    d. Tamms Industries, Inc.

e. Vandex International, Inc.

2.6 ACCESSORY MATERIALS

A. Provide the following related accessory materials necessary for complete installation of textured acrylic coating system as recommended by textured acrylic coating manufacturer for substrate conditions and application requirements.

B. Crack Filler: Textured acrylic coating manufacturer's recommended, factory-formulated crack filler or sealants, including crack filler primer, compatible with substrate and other materials indicated.

C. Primer: Textured acrylic coating manufacturer's recommended, factory-formulated, alkali-resistant primer compatible with substrate and other materials indicated.

D. Concrete Unit Masonry Block Filler: Textured acrylic coating manufacturer's recommended, factory-formulated, high-performance latex block filler compatible with substrate and other materials indicated.

PART 3 - EXECUTION

3.1 EXAMINATION

A. Acceptance of Surfaces and Conditions: Examine substrates to receive products and systems and associated work for compliance with requirements and other conditions affecting performance. Proceed only when unsatisfactory conditions have been corrected in a manner complying with Contract Documents. Starting work within a particular area will be construed as acceptance of surface conditions.

B. Begin coating only when moisture content of substrate is 12% or less when measured with an electronic moisture meter.

C. Begin coating no sooner than 28 days after substrate is constructed and is visually dry on both sides.

D. Substrates:

1. New: Verify that substrate is within the range of alkalinity recommended by textured acrylic coating manufacturer.
2. Existing: Verify suitability of substrates including surface conditions and compatibility with existing finishes and primers.

3.2 APPLICATION, GENERAL

A. Application Quality Standards: In addition to standards listed elsewhere, perform Work according to following, unless otherwise specified:

1. Respective manufacturer's written application instructions.
2. Accepted submittals.
3. Contract Documents.

3.3 PREPARATION

A. General: Comply with manufacturer's instructions, recommendations, and specifications for cleaning and surface preparation. Surfaces shall have no defects, contaminants, or errors which would result in poor or potentially defective application or would cause latent defects in Work.

B. Remove items already installed that are not to be coated. If removal is impractical or impossible because of size or weight of item, provide surface-applied protection before surface preparation and coating. After completing coating operations in each area, reinstall items removed, using workers skilled in trades involved.

C. Cleaning: Before applying coatings or other surface treatments, clean substrates of substances that could impair bond of coating systems. Remove oil and grease before cleaning. Schedule cleaning and coating application so dust and other contaminates will not fall on wet, newly coated surfaces.

D. Modified Cement Waterproofing

1. Apply number of coats recommended by manufacturer, but not less than two, by method suitable for substrate.
2. Allow sufficient time between coatings to eliminate possibility of cementitious substrate joints telegraphing.
3. Allow sufficient time for curing before applying textured acrylic coating.

E. Surface Preparation: Clean and prepare surfaces to be coated according to manufacturer's written instructions for the particular substrate conditions and as specified.

1. Cementitious Surfaces: Prepare concrete, concrete masonry, stucco, and similar surfaces to receive textured acrylic coatings. Remove efflorescence, chalk, dust, dirt, release agents, grease, oils, and similar conditions by water blasting followed by a clear water rinse.

    a. Remove mildew and neutralize surfaces according to manufacturer's written recommendations before patching materials are applied.
    b. Roughen as required to remove glaze. Use abrasive blast-cleaning methods if recommended by coating manufacturer.
    c. If hardeners or sealers have been used to improve concrete curing, use mechanical methods for surface preparation.
    d. Determine alkalinity and moisture content of surfaces to be coated by performing appropriate tests. Do not apply coatings over surfaces where moisture content exceeds that permitted in manufacturer's written instructions.

2. Crack Repair: Fill cracks according to manufacturer's written recommendations before coating surfaces.
3. Deep Hairline Cracks: Remove dust and dirt from around cracks. Remove mildew by sterilizing before filling. Apply manufacturer's recommended primer to cracks before patching. If shrinkage occurs after applying crack filler, apply additional filler material to cracks before initially applying textured acrylic coatings.

a. Cracks up to 1/16 in (1.5 mm): Clean surface around cracks. Apply primer penetrating cracks as deeply as possible, overflowing crack 2 in (50 mm) on each side. When primer is dry, apply crack filler forced well into cracks. Smooth edges around cracks over primed area. Allow for shrinkage when applying.
b. Cracks up to 3/8 in (10 mm): Open cracks to 1/4 in to 3/8 in (6 mm to 10 mm) wide and 1/8 in (3 mm) deep. Clean cracks and surrounding area removing dust, dirt, and other impurities. Apply primer to obtain uniform coverage and spread approximately 2 in (50 mm) on each side of cracks. Fill cracks with manufacturer's recommended crack filler, and allow for shrinkage. If excessive shrinkage occurs, reapply crack filler.

F. Material Preparation: Mix and prepare materials according to coating manufacturer's written instructions.

1. Stir materials before application to produce a mixture of uniform density. Stir as required during application. Do not stir surface film that may form into material. Remove film and, if necessary, strain coating material before using.
2. If manufacturer permits thinning, use only thinners recommended by manufacturer, and only within limits recommended by manufacturer.

3.4 APPLICATION OF TEXTURED ACRYLIC COATINGS

A. General: Apply textured acrylic coatings to exposed surfaces indicated, according to manufacturer's written instructions.

B. Labels: Do not paint over UL, FM, or other code-required labels or equipment name, identification, performance rating, or nomenclature plates.

C. Coating: Apply first coat to surfaces that have been cleaned, pretreated, or otherwise prepared for painting as soon as practicable after preparation and before subsequent surface deterioration.

1. The number of coats and film thickness required are the same regardless of application method.
2. Do not apply succeeding coats until previous coat has cured as recommended by manufacturer.
3. If undercoats or other conditions show through final coat, apply additional coats until coating film is of uniform finish, color, and appearance.
4. Ensure that surfaces, including edges, corners, and crevices receive a dry film thickness equivalent to that of flat surfaces.
5. Allow sufficient time between successive coats to permit proper drying.
6. Do not recoat surfaces where application of another coat would cause undercoat to lift or lose adhesion.

D. Application Procedures: Apply textured acrylic coatings by roller or spray according to manufacturer's written instructions.

1. Rollers: Use professional-quality quick-release rollers of carpet, velvet back, or high-pile sheep's wool covers as recommended by the manufacturer for material and texture required.
2. Spray Equipment: Use airless spray equipment with orifice size as recommended by the manufacturer for material and texture required.

3. Minimum Coating Thickness: Apply each material no thinner than manufacturer's recommended spreading rate. Provide total dry film thickness as recommended by the manufacturer.
4. Wherever spray application is used, apply each coat to provide adequate coverage. Do not double back with spray equipment, building up film thickness of 2 coats in 1 pass.

E. Block Fillers: Apply block fillers to concrete masonry block at a rate to ensure complete coverage with pores filled.

F. Prime Coats: If recommended by the manufacturer, apply primer to substrate being coated before applying finish coats. Apply at a rate to ensure complete coverage.

G. Roller Application: Keep the cover wet at all times; do not dry roll. Work in sections. Lay on required amount of material, working material into grooves and rough areas; then level material, working it into surface.

H. Spray Application: Use spray equipment for application only when permitted by manufacturer's written recommendations and authorities having jurisdiction. Wherever spray application is used, do not double back with spray equipment to build up film thickness of two coats in one pass.

I. Completed Work: Match accepted samples for color, texture, and coverage. Remove, refinish, or recoat work not complying with specified requirements.

3.5 FIELD QUALITY CONTROL

A. Manufacturer's Field Service: Manufacturer's qualified technical representative shall periodically inspect Work to ensure installation is proceeding in accordance with manufacturer's designs, recommendations, instructions, and warranty requirements. Representative shall submit written reports of each visit indicating observations, findings, and conclusions of inspection.

1. Manufacturer's Technical Representative Qualifications: Direct employee of technical services department of manufacturer with experience in providing recommendations, observations, evaluations, and problem diagnostics.

3.6 CLEANING

A. At end of each workday, remove rubbish, empty cans, rags, and other discarded materials from the Project site.

B. After completing coating work, clean glass and spattered surfaces. Remove spattered coatings by washing, scraping, or other methods, being careful not to scratch or damage adjacent finished surfaces.

3.7 PROTECTION

A. Protect work of other trades from damage whether being coated or not. Correct damage by cleaning, repairing, replacing, and recoating as approved by the Architect. Leave in an undamaged condition.

B. Provide "Wet Paint" signs to protect newly coated finishes. Remove temporary protective wrappings provided by others to protect their work after completing coating operations.

C. After construction activities of other trades are complete, touch up and restore damaged or defaced coated surfaces.

3.8 TEXTURED ACRYLIC COATING SCHEDULE

A. Color and Texture: As selected by Architect from full range of manufacturer's colors and textures.

END OF SECTION

SECTION 10 1100

VISUAL DISPLAY BOARDS

PART 1 - GENERAL

1.1 SUMMARY

A. Work for this section includes visual display surfaces and supplementary items necessary to complete their installation for the following:

1. Metal-framed markerboards.
2. Metal-framed tackboards.
3. Glass markerboards.

1.2 ACTION SUBMITTALS

A. Product Data: Manufacturer's technical literature for each product and system indicated.

1. Include manufacturer's specifications for materials, finishes, construction details, installation instructions, and recommendations for maintenance.

B. Shop Drawings: Show details of fabrication and installation, including plans, elevations, sections, details of components and attachments to other work. Distinguish between shop and field-assembled work.

C. Samples for Initial Selection: For each type of visual display unit indicated, for units with factory-applied color finishes.

D. Samples for Verification: For each type of visual display unit indicated.

1. Visual Display Panel: Not less than 8-1/2 by 11 inches (215 by 280 mm), with facing, core, and backing indicated for final Work. Include one panel for each type, color, and texture required.
2. Trim: 6-inch- (150-mm-) long sections of each trim profile.
3. Display Rail: 6-inch- (150-mm-) long section of each type.
4. Accessories: Full-size Sample of each type of accessory.

E. Product Schedule: For visual display boards. Use same designations indicated on Drawings.

1.3 INFORMATIONAL SUBMITTALS

A. Product Test Reports for Vinyl-Fabric-Faced Tackboards: Based on evaluation of comprehensive tests performed by a qualified testing agency, for surface-burning characteristics of tackboards.

B. Qualification Data:

1. For firms and persons specified in "Quality Assurance" to demonstrate their capabilities and experience. Include list of completed projects.

C. Warranty: Sample of warranty.

1. Provide manufacturer's written warranty covering materials and installation (labor) stating obligations, remedies, limitations and exclusions.

1.4 CLOSEOUT SUBMITTALS

A. Maintenance Data: For visual display units to include in maintenance manuals.

1.5 QUALITY ASSURANCE

A. Manufacturer Qualifications: Manufacturer with not less than 5 years of experience in the successful production and in-service performance of products and systems similar to scope of this Project.

B. Fire-Test-Response Characteristics for Vinyl-Fabric-Faced Tackboards: Provide vinyl-fabric-faced tackboards with the following surface-burning characteristics as determined by testing assembled materials composed of facings and backings identical to those required in this Section per ASTM E 84 by a testing and inspecting agency acceptable to authorities having jurisdiction. Identify vinyl-fabric-faced tackboards with appropriate markings of applicable testing and inspecting agency.

1. Flame Spread: 25 or less (Class A).
2. Smoke Developed: 10 or less.

1.6 WARRANTY

A. Porcelain Enamel Warranty: Submit a written warranty executed by manufacturer agreeing to replace porcelain enamel boards that do not retain their original writing and erasing qualities, exhibit excessive fading of color, or exhibit crazing, cracking, or flaking for the lifetime of the original installation, provided the manufacturer's written instructions for handling, installation, protection, and maintenance have been followed.

PART 2 - PRODUCTS

2.1 MANUFACTURERS AND PRODUCTS

A. Acceptable Manufacturers and Products: Subject to compliance with requirements of Contract Documents as judged by the Architect, provide product by one of manufacturers listed. If not listed, submit as substitution according to the Conditions of the Contract and Division 01 Section "Substitution Procedures".

B. Available Manufacturers and Products: Subject to compliance with requirements of Contract Documents as judged by the Architect, manufacturers offering products that may be incorporated into the Work include, but are not limited to, those listed.

1. ADP Lemco, Inc.
2. Best-Rite Manufacturing.
3. Claridge Products and Equipment, Inc.
4. Ghent Manufacturing, Inc.
5. Marsh Industries, Inc.; Visual Products Group.

2.2 MATERIALS, GENERAL

A. Single Source Responsibility: Furnish each type of product from single manufacturer. Provide secondary materials only as recommended by manufacturer of primary materials.

2.3 MARKERBOARDS

A. Porcelain Enamel Panels: Balanced, high-pressure-laminated, porcelain enamel panels of 3-ply construction consisting of face sheet, core material, and backing.

1. Face Sheet: 0.024-inch (0.61-mm) enameling grade steel especially processed for temperatures used in coating porcelain on steel. Coat exposed face and edges with a 3-coat process consisting of primer, ground coat, and color cover coat. Coat concealed face with a 2-coat process consisting of primer and ground coat. Fuse cover and ground coats to steel at manufacturer's standard firing temperatures, but not less than 1200 deg F (649 deg C).

    a. Markerboard Cover Coat: Provide manufacturer's standard, light-colored, special writing surface with gloss finish intended for use with erasable dry markers.

2. Core: 3/8-inch- (9.5-mm-) thick, particleboard core material complying with requirements of ANSI A208.1, Grade 1-M-1.
3. Backing Sheet: 0.015-inch- (0.38-mm-) thick, aluminum-sheet backing.
4. Laminating Adhesive: Manufacturer's standard, moisture-resistant, thermoplastic-type adhesive.

2.4 TACKBOARDS

A. Natural-Cork Tackboards: Single-layer, 1/4-inch- (6.4-mm-) thick, seamless, compressed fine-grain, bulletin board quality, natural-cork sheet; face sanded for natural finish.

B. Plastic-Impregnated Cork Tackboards: Seamless sheet, 1/4-inch- (6.4-mm-) thick, ground natural cork compressed with a resinous binder with washable vinyl finish and integral color throughout, laminated to burlap backing.

1. Color: As scheduled or as indicated in Design Selections.

C. Vinyl-Fabric-Faced Tackboards: Mildew-resistant, washable vinyl fabric complying with FS CCC-W-408, Type II, weighing not less than 13 oz./sq. yd. (440 g/sq. m), laminated to 1/4-inch- (6.4-mm-) thick cork sheet. Provide fabric with a flame-spread rating of 25 or less when tested according to ASTM E 84.

1. Color: As scheduled or as indicated in Design Selections.

D. Backing: Factory laminate cork face sheet under pressure to 1/4-inch- (6.4-mm-) thick hardboard backing.

2.5 GLASS MARKERBOARDS

A. Glass Markerboards: 1/4 inch (6 mm) tempered glass markerboard, with smooth polished edge and eased corners.

1. Clear Tempered Glass: ASTM C 1048, Kind FT, Condition A, Type I, Class 1, Quality Q3, with exposed edges seamed before tempering.
2. Mounting: Round, stainless-steel standoffs, holding glass approximately 1 inch (25 mm) from wall surface; mounted in notches in standoffs at top and bottom edges of markerboard.
3. Color and Surface: clear.
4. Marker Tray: Glass, supported by stainless-steel clips.
5. Sizes: as indicated on drawings.

2.6 ACCESSORIES

A. Metal Trim and Accessories: Fabricate frames and trim of not less than 0.062-inch- (1.57-mm-) thick, extruded-aluminum alloy, size and shape as indicated, to suit type of installation. Provide straight, single-length units. Keep joints to a minimum. Miter corners to a neat, hairline closure.

1. Where size of visual display surfaces or other conditions require support in addition to normal trim, provide structural supports or modify trim as selected by Architect from manufacturer's standard structural support accessories to suit conditions indicated.
2. Factory-Applied Trim: Manufacturer's standard narrow trim with no visible screws or exposed joints.

3. Chalktray: Manufacturer's standard, continuous, solid, extrusion-type, aluminum chalktray with ribbed section and smoothly curved exposed ends for each chalkboard.
4. Map Rail: Furnish map rail at top of each unit, complete with continuous cork display rail approximately 1 or 2 inches (25 or 50 mm) wide, integral with map rail and end stops at each end of map rail.

2.7 FABRICATION

A. Porcelain Enamel Boards: Laminate facing sheet and backing sheet to core material under pressure with manufacturer's recommended flexible, waterproof adhesive.

B. Assembly: Provide factory-assembled units, unless field-assembled units are required.

1. Make joints only where total length exceeds maximum manufactured length. Fabricate with minimum number of joints, balanced around center of board, as acceptable to Architect.
2. Provide manufacturer's standard vertical joint system between abutting sections of chalkboards.

2.8 FINISHES

A. General: Comply with NAAMM's "Metal Finishes Manual for Architectural and Metal Products" for recommendations relative to applying and designating finishes.

B. Finish designations prefixed by AA conform to the system established by the Aluminum Association for designating aluminum finishes.

C. Aluminum Frame Finish: As scheduled or as indicated in Design Selections.

PART 3 - EXECUTION

3.1 EXAMINATION

A. Acceptance of Surfaces and Conditions: Examine substrates to receive products and systems and associated work for compliance with requirements and other conditions affecting performance. Proceed only when unsatisfactory conditions have been corrected in a manner complying with Contract Documents. Starting work within a particular area will be construed as acceptance of surface conditions.

3.2 INSTALLATION, GENERAL

A. Installation Quality Standards: In addition to standards listed elsewhere, perform Work according to following, unless otherwise specified:

1. Respective manufacturer written installation instructions.
2. Accepted submittals.
3. Contract Documents.

3.3 PREPARATION

A. General: Comply with manufacturer's instructions, recommendations, and specifications for cleaning and surface preparation. Surfaces shall have no defects, contaminants, or errors which would result in poor or potentially defective installation or would cause latent defects in Work.

3.4 INSTALLATION

A. Deliver factory-built visual display boards completely assembled in one piece without joints, where possible. If dimensions exceed panel size, provide 2 or more pieces of equal length as acceptable to Architect. When overall dimensions require delivery in separate units, prefit components at the factory, disassemble for delivery, and make final joints at the site. Use splines at joints to maintain surface alignment.

B. Install units in locations and at mounting heights indicated and according to manufacturer's written instructions. Keep perimeter lines straight, plumb, and level. Provide grounds, clips, backing materials, adhesives, brackets, anchors, trim, and accessories necessary for complete installation.

3.5 CLEANING AND PROTECTION

A. Clean visual display boards according to manufacturer's written instructions. Attach one removable cleaning instructions label to visual display unit in each room.

B. Touch up factory-applied finishes to restore damaged or soiled areas.

C. Cover and protect visual display boards after installation and cleaning.

3.6 FINISH SCHEDULE: As indicated in the Interior Finish Legend.

END OF SECTION

SECTION 10 1400

INTERIOR SIGNAGE

PART 1 - GENERAL

1.1 SUMMARY

A. Work required for this section includes code required signs, including ADA, and supplementary items necessary to complete their installation.

1.2 ACTION SUBMITTALS

A. Product Data: Manufacturer's technical literature for each product and system indicated.

1. Include manufacturer's specifications for materials, finishes, construction details, installation instructions, and recommendations for maintenance.

B. Shop Drawings: Show details of fabrication and installation, including plans, elevations, sections, mounting heights, spacing, reinforcemnt, details of components and attachments to other work. Distinguish between shop and field-assembled work.

1. Provide message list for each sign, including large-scale details of wording, lettering, and Braille layout.

C. Samples for Initial Selection: For each type of sign material indicated that involves color selection.

D. Samples for Verification: For each type of sign, include the following Samples to verify color selected:

1. Panel Signs: Full-size Samples of each type of sign required.
2. Dimensional Characters: Full-size Samples of each type of dimensional character (letter and number) required. Show character style, material, finish, and method of attachment.
3. Approved samples will not be returned for installation into Project.

1.3 INFORMATIONAL SUBMITTALS

A. Qualification Data:

1. For firms and persons specified in "Quality Assurance" to demonstrate their capabilities and experience. Include list of completed projects.

1.4 QUALITY ASSURANCE

A. Manufacturer/Fabricator Qualifications: Manufacturer with experience in the successful production and in-service performance of products and systems similar to scope of this Project.

B. Regulatory Requirements: Comply with code provisions as adopted by authorities having jurisdiction and with Americans with Disabilities Act (ADA) for the following:

1. Tactile and Braille Characters.
2. Typestyles.
3. Character Height.
4. Pictograms (Symbols).
5. Finish and Contrast.
6. Mounting Location and Height.

PART 2 - PRODUCTS

2.1 ACCEPTABLE MANUFACTURERS

A. Acceptable Manufacturers and Products: Subject to compliance with requirements of Contract Documents as judged by the Architect, provide product by one of manufacturers listed. If not listed, submit as substitution according to the Conditions of the Contract and Division 01 Section "Substitution Procedures".

1. ASI Sign Systems, Inc.
2. Best Manufacturing Company.
3. Mohawk Sign Systems.
4. Seton Identification Products
5. The Supersine Company.

2.2 MATERIALS, GENERAL

A. Single Source Responsibility: Furnish each type of product from single manufacturer. Provide secondary materials only as recommended by manufacturer of primary materials.

2.3 MATERIALS

A. Plastic Laminate: Provide melamine plastic laminate engraving stock with face and core plies in contrasting colors.

B. Cast Acrylic Sheet: Provide cast (not extruded or continuous cast) methyl methacrylate monomer plastic sheet, in sizes and thicknesses indicated, with a minimum flexural strength of 16,000 psi when tested according to ASTM D 790, with a minimum allowable continuous service temperature of 176 deg F.

1. Colored Coatings: Use colored coatings, including inks and paints for copy and background colors, that are recommended by acrylic manufacturers for optimum adherence to acrylic surface and are nonfading for the application intended.
2. Mounting Fasteners: Use concealed fasteners fabricated from materials that are not corrosive to the sign material and mounting surface.

2.4 FABRICATION

A. Unframed Panel Signs: Fabricate signs with edges mechanically and smoothly finished with square coat edge condition and square corner condition.

B. Graphic Content and Style: Provide sign copy that complies with requirements indicated and ADA for size, style, spacing, content, mounting height and location, material, finishes, and colors of signage.

C. Tactile and Braille Copy: Manufacturer's standard process for producing copy complying with ADA Accessibility Guidelines and ICC/ANSI A117.1. Text shall be accompanied by Grade 2 Braille. Produce precisely formed characters with square cut edges free from burrs and cut marks.

D. Typical Sign Design:

E. Material: Cast-acrylic sheet or Plastic laminate.

F. Perimeter: Unframed.

G. Copy: Tactile and Braille.

H. Character Style: Helvetica.

I. Text: As indicated in the Sign Schedule to identify location.

J. Message: Fixed.

K. Sizes: Minimum required to meet code and ADA requirements.

L. Colors: As selected from manufacturer’s standard colors.

2.5 FINISHES

A. Colors and Surface Textures: For exposed sign material that requires selection of materials with integral or applied colors, surface textures or other characteristics related to appearance, provide color matches indicated, or if not indicated, as selected by the Architect from the manufacturer's standards.

PART 3 - EXECUTION

3.1 EXAMINATION

A. Acceptance of Surfaces and Conditions: Examine substrates to receive products and systems and associated work for compliance with requirements and other conditions affecting performance. Proceed only when unsatisfactory conditions have been corrected in a manner complying with Contract Documents. Starting work within a particular area will be construed as acceptance of surface conditions.

3.2 INSTALLATION, GENERAL

A. Installation Quality Standards: In addition to standards listed elsewhere, perform Work according to following, unless otherwise specified:

1. Respective manufacturer written installation instructions.
2. Accepted submittals.
3. Contract Documents.

B. Control of Corrosion: Prevent galvanic action and other forms of corrosion by isolating metals and other materials from direct contact with incompatible materials.

3.3 PREPARATION

A. General: Comply with manufacturer's instructions, recommendations, and specifications for cleaning and surface preparation. Surfaces shall have no defects, contaminants, or errors which would result in poor or potentially defective installation or would cause latent defects in Work.

3.4 INSTALLATION

A. General: Locate sign units and accessories where indicated, using mounting methods of the type described and in compliance with the manufacturer's instructions.

1. Install signs level, plumb, and at the height indicated, with sign surfaces free from distortion or other defects in appearance.
2. Wall Signs: Install signs on walls adjacent to latch side of door where applicable. Where not indicated or possible, such as double doors, install signs on nearest adjacent walls. Locate to allow approach within 3 in (75 mm) of sign without encountering protruding objects or standing within swing of door.

B. Wall-Mounted Panel Signs: Attach panel signs to wall surfaces using one method indicated below:

1. Vinyl-Tape Mounting: Use double-sided foam tape to mount signs to smooth, nonporous surfaces. Do not use this method for vinyl-covered or rough surfaces.
2. Hook-and-Loop Tapes: Use hook-and-loop tapes to mount signs to smooth, nonporous surfaces.
3. Magnetic Tape: Use magnetic tape to mount signs to smooth, nonporous surfaces.
4. Silicone-Adhesive Mounting: Use liquid-silicone adhesive recommended in writing by sign manufacturer to attach signs to irregular, porous, or vinyl-covered surfaces. Use double-sided vinyl tape where recommended in writing by sign manufacturer to hold sign in place until adhesive has fully cured.

3.5 CLEANING AND PROTECTION

A. After installation, clean soiled sign surfaces according to the manufacturer's instructions. Protect units from damage until acceptance by the Owner.

3.6 SCHEDULE OF SIGNS

A. See drawings for plan locations, schedules, and elevations.

B. Stairs:

1. Provide a sign at each door to each stairway on each floor.
2. Message:

    a. Required wording for exiting as required by the local code authorities. "**STAIR WAY**".
    b. Braille message as required by ADA.

C. Stairs To Roof:

1. Provide a sign at each door on Level One to each stairway that goes to Roof.

2. Message: Required wording as required by the local code authorities. "**STAIRS GOES TO ROOF**".

D. Inside Stairs:

1. Provide a sign at each door in stairways.
2. Message: As required by local code authorities.

    a. Identify stair location.
    b. Identify floor level.
    c. Identify all floors served.
    d. Identify stairway's upper terminus.

3. Braille message as required by ADA.

E. Elevator Lobbies:

1. Provide a sign at each elevator group on other than Level One.
2. Provide a sign at each elevator group on all levels.

    a. Message:

        1) Required wording and diagram for exiting as required by the local code authorities.
            "IN CASE OF FIRE
            DO NOT USE ELEVATORS
            USE STAIRS"
        2) Graphic symbols that are appropriate, including Fire Evacuation Map.
        3) Braille message as required by ADA.

    b. Mount above elevator call button.

F. Toilet Rooms:

1. Provide a sign at the door to each public toilet room.
2. Message:

    a. "**MEN**" or "**WOMEN**" as appropriate for the room.
    b. Graphic symbol that is appropriate for the room.
    c. Symbol of accessibity.
    d. Braille message as required by ADA.

G. Other Rooms:

1. Provide a sign at each door that leads into the following rooms:

2. **TELEPHONE ROOM**
3. **ELECTRICAL ROOM**
4. **JANITOR CLOSET**
5. **MECHANICAL ROOM**
6. **MAIN TELEPHONE ROOM**
7. **MAIN ELECTRICAL ROOM**
8. **FIRE PUMP ROOM**

9. **FIRE CONTROL ROOM**
10. **SERVICE ELEVATOR**
11. **ELEVATOR MACHINE ROOM**
12. Braille message as required by ADA.

END OF SECTION

SECTION 10 2113

TOILET COMPARTMENTS

PART 1 - GENERAL

1.1 SUMMARY

A. Work for this section includes standard, manufactured toilet compartments and supplementary items necessary to complete work required for their installation.

1.2 ACTION SUBMITTALS

A. Product Data: For each type and style of toilet compartment and screen specified. Include details of construction relative to materials, fabrication, and installation. Include details of anchors, hardware, and fastenings.

B. Shop Drawings: For fabrication and installation of toilet compartment and screen assemblies. Include plans, elevations, sections, details, and attachments to other work.

1. Show locations of reinforcement and cutouts for compartment-mounted toilet accessories.

C. Samples for Verification: Of each compartment or screen color and finish required, prepared on 6-inch- (150-mm-) square Samples of same thickness and material indicated for Work.

1.3 QUALITY ASSURANCE

A. Surface-Burning Characteristics: As determined by testing identical products according to ASTM E 84, or another standard acceptable to authorities having jurisdiction, by a qualified testing agency. Identify products with appropriate markings of applicable testing agency.

1. Flame-Spread Index: 25 or less.
2. Smoke-Developed Index: 450 or less.

B. Regulatory Requirements: Comply with applicable provisions in the U.S. Architectural & Transportation Barriers Compliance Board's "Americans with Disabilities Act (ADA) and Architectural Barriers Act (ABA) Accessibility Guidelines for Buildings and Facilities" for toilet compartments designated as accessible.

1.4 PROJECT CONDITIONS

A. Field Measurements: Where products and systems are indicated to fit walls and other construction, verify dimensions by field measurements before fabrication.

PART 2 - PRODUCTS

2.1 MANUFACTURERS

A. Acceptable Manufacturers: Subject to compliance with requirements of Contract Documents as judged by the Architect, provide product by one of manufacturers listed. If not listed, submit as substitution according to the Conditions of the Contract and Division 01 Section "Substitution Procedures".

1. Stainless Steel Units:

a. Accurate Partitions Corporation.
b. All American Metal Corp.
c. American Sanitary Partition Corporation.
d. Ampco, Inc.
e. Bradley Corporation; Mills Partitions.
f. Flush Metal Partition Corp.
g. General Partitions Mfg. Corp.
h. Global Steel Products Corp.
i. Hadrian Manufacturing Inc.
j. Knickerbocker Partition Corporation.
k. Metpar Corp.
l. Sanymetal; a Crane Plumbing company.

2.2 MATERIALS

A. General: Provide materials that have been selected for surface flatness and smoothness. Exposed surfaces that exhibit pitting, seam marks, roller marks, stains, discolorations, telegraphing of core material, or other imperfections on finished units are unacceptable.

B. Stainless-Steel Sheet: ASTM A 666, Type 302 or 304, that is leveled to stretcher-leveled flatness, finished on exposed faces as indicated in the "Stainless-Steel Sheet Finishes" Article, and of the following minimum thicknesses:

1. Pilasters:

a. Overhead Braced Units: 0.0375 in (0.9 mm).
b. Unbraced Units: 0.0500 in (1.25 mm).

2. Panels and Screens: 0.0375 in (0.9 mm).
3. Doors: 0.0312 in (0.78 mm).
4. Tapping Reinforcement: 0.0781 in (1.9 mm).

C. Core Material for Metal-Faced Units: Manufacturer's standard sound-deadening honeycomb of resin-impregnated kraft paper in thickness required to provide finished thickness of 1 in (25 mm) minimum for doors, panels, and screens and 1-1/4 in (32 mm) minimum for pilasters.

D. Pilaster Shoes and Sleeves (Caps): ASTM A 666, Type 302 or 304 stainless steel, not less than 0.0312 in (0.78 mm) thick and 3 in (75 mm) high, finished to match hardware.

E. Stirrup Brackets: Manufacturer's standard Chrome-plated, nonferrous, case zinc alloy (zamac) or clear-anodized aluminum ear or U-brackets for attaching panels to walls and pilasters.

F. Hardware and Accessories: Manufacturer's standard design, heavy-duty Chrome-plated, nonferrous, cast zinc alloy (zamac) or clear-anodized aluminum operating hardware and accessories.

G. Anchorages and Fasteners: Manufacturer's standard exposed fasteners of stainless steel or chrome-plated steel or brass, finished to match hardware, with theft-resistant-type heads. Provide sex-type bolts for through-bolt applications. For concealed anchors, use hot-dip galvanized or other rust-resistant, protective-coated steel.

1. Floor Mounted Units: Anchorages and fasteners in contact with or in close proximity to floor shall be stainless steel

2.3 FABRICATION

A. General: Provide standard doors, panels, screens, and pilasters fabricated for compartment system. Provide units with cutouts and drilled holes to receive compartment-mounted hardware, accessories, and grab bars.

B. Metal-Faced Toilet Compartments and Screens: Pressure laminate seamless face sheets to core material and provide continuous, interlocking molding strip or lapped and formed edges. Seal corners by welding or clips. Grind exposed welds smooth. Provide internal reinforcement for compartment-mounted hardware, accessories, and grab bars, as indicated.

C. Floor-Anchored Compartments: Provide manufacturer's standard corrosion-resistant anchoring assemblies complete with threaded rods, lock washers, and leveling adjustment nuts at pilasters for structural connection to floor. Provide shoes at pilasters to conceal anchorage.

D. Floor-Anchored Screens: Provide pilasters and panels of same construction and finish as toilet compartments. Provide manufacturer's standard corrosion-resistant anchoring assemblies complete with threaded rods, lock washers, and leveling adjustment nuts at pilasters for structural connection to floor. Provide shoes at pilasters to conceal anchorage.

E. Doors: Unless otherwise indicated, provide 30 in (750 mm) wide clear opening in-swinging doors for standard toilet compartments and 36 in (900 mm) wide out-swinging doors with a minimum 32 in (800 mm) wide clear opening for compartments indicated to be accessible.

1. Hinges: Manufacturer's standard self-closing type that can be adjusted to hold door open at any angle up to 90 degrees.
2. Latch and Keeper: Manufacturer's standard surface-mounted latch unit with combination rubber-faced door strike and keeper designed for emergency access. Provide units that comply with accessibility requirements of authorities having jurisdiction at compartments indicated to be accessible.
3. Coat Hook: Manufacturer's standard combination hook and rubber-tipped bumper, sized to prevent door from hitting compartment-mounted accessories.
4. Door Bumper: Manufacturer's standard rubber-tipped bumpers at out-swinging doors.
5. Door Pull: Manufacturer's standard unit that complies with accessibility requirements of authorities having jurisdiction at out-swinging doors. Provide units on both sides of doors at compartments indicated to be accessible.

2.4 STAINLESS-STEEL SHEET FINISHES

A. General: Comply with NAAMM's "Metal Finishes Manual for Architectural and Metal Products" for recommendations relative to applying and designating finishes.

1. Remove or blend tool and die marks and stretch lines into finish.
2. Grind and polish surfaces to produce uniform, directional textured, polished finish indicated, free of cross scratches. Run grain with long dimension of each piece.

B. Finish: No. 4 bright, directional polish.

C. When polishing is completed, passivate and rinse surfaces. Remove embedded foreign matter and leave surfaces chemically clean.

D. Protect mechanical finishes on exposed surfaces from damage by applying a strippable, temporary protective covering before shipment.

PART 3 - EXECUTION

3.1 EXAMINATION

A. Acceptance of Surfaces and Conditions: Examine substrates to receive products and systems and associated work for compliance with requirements and other conditions affecting performance. Proceed only when unsatisfactory conditions have been corrected in a manner complying with Contract Documents. Starting work within a particular area will be construed as acceptance of surface conditions.

3.2 INSTALLATION, GENERAL

A. Installation Quality Standards: In addition to standards listed elsewhere, perform Work according to following, unless otherwise specified:

1. Respective manufacturer’s written installation instructions.
2. Accepted submittals.
3. Contract Documents.

3.3 INSTALLATION

A. General: Comply with manufacturer's written installation instructions. Install units rigid, straight, plumb, and level. Provide clearances of not more than 1/2 in (12 mm) between pilasters and panels and not more than 1 in (25 mm) between panels and walls. Secure units in position with manufacturer's recommended anchoring devices.

1. Secure panels to walls and panels with not less than 2 stirrup brackets attached near top and bottom of panel. Locate wall brackets so holes for wall anchors occur in masonry or tile joints. Align brackets at pilasters with brackets at walls.

B. Floor-Anchored Compartments: Set pilaster units with anchors penetrating not less than 2 in (50 mm) into structural floor, unless otherwise indicated in manufacturer's written instructions. Level, plumb, and tighten pilasters. Hang doors and adjust so tops of doors are level with tops of pilasters when doors are in closed position.

C. Screens: Attach with anchoring devices according to manufacturer's written instructions and to suit supporting structure. Set units level and plumb and to resist lateral impact.

3.4 ADJUSTING AND CLEANING

A. Hardware Adjustment: Adjust and lubricate hardware according to manufacturer's written instructions for proper operation. Set hinges on in-swinging doors to hold open approximately 30 degrees from closed position when unlatched. Set hinges on out-swinging doors and swing doors in entrance screens to return to fully closed position.

B. Provide final protection and maintain conditions that ensure toilet compartments and screens are without damage or deterioration at the time of Substantial Completion.

3.5 FINISH SCHEDULE: As per Interior Finish Legend.

A. Steel Units - Baked Enamel Finish:

1. Color Selection: As selected from manufacturer's standard colors and approved by the Architect

END OF SECTION

SECTION 10 2115

CUBICLE SPECIALTIES

PART 1 - GENERAL

1.1 SUMMARY

A. Work required for this section includes cubicle specialties and supplementary items necessary to complete their installation.

1.2 SUBMITTALS

A. Product Data: Submit manufacturer's specifications to evidence compliance with these specifications.

B. Shop Drawings:

1. Show details of the system, related construction and reflected layout of ceiling areas showing location of tracks in relation to other ceiling mounted items.
2. Indicate materials, finishes, dimensions, thicknesses and/or gages of parts, reinforcement, where applicable, and anchorage including items of hardware and accessories necessary for complete installation.

C. Samples for Verification: Full-size units of each type of the following products:

1. Curtain Fabric: 12 in (300 mm) square swatch or larger Sample as required to show complete pattern repeat, from dye lot used for the Work, with specified treatments applied. Mark top and face of material.
2. Curtain Track: Not less than 4 in (100 mm) long.
3. Curtain Carrier: Full-size unit.
4. IV Track: Not less than 4 in (100 mm) long.
5. IV Hanger: Full-size unit.

D. Cubicle Schedule: Use same room designations as indicated on Drawings.

1.3 CLOSEOUT SUBMITTALS

A. Maintenance Data: For each product if specified to include in maintenance manuals specified in Division 01.

1.4 MAINTENANCE MATERIAL SUBMITTALS

A. Furnish extra materials described below, before installation begins, that match products installed and that are packaged with protective covering for storage and identified with labels describing contents.

1. Curtain Carriers and Track End Caps: Full-size units equal to 3 percent of quantity installed for each size indicated, but not less than 10 units.
2. Curtains: Full-size units equal to 10 percent of quantity installed, but not less than 2 units.

1.5 QUALITY ASSURANCE

A. Mockup: Build mockup to verify selections made under Sample submittals and to demonstrate aesthetic effects and qualities of materials and execution.

1. Build mockup of typical cubicle, complete with tracks, IV hanger, and curtain if specified.
2. Approved mockup may become part of the completed Work if undisturbed at time of Substantial Completion.

1.6 PROJECT CONDITIONS

A. Environmental Limitations: Do not install cubicle specialties until spaces are enclosed and weatherproof, wet work in spaces is complete and dry, work above ceilings is complete, and ambient temperature and humidity conditions are maintained at the levels indicated for Project when occupied for its intended use.

B. Field Measurements: Where products and systems are indicated to fit walls and other construction, verify dimensions by field measurements before fabrication.

PART 2 - PRODUCTS

2.1 MANUFACTURERS AND PRODUCTS

A. Acceptable Manufacturers and Products: Subject to compliance with requirements of Contract Documents as judged by the Architect, provide product by one of manufacturers listed. If not listed, submit as substitution according to the Conditions of the Contract and Division 01 Section "Substitution Procedures".

1. C/S Cubicle Curtains.
2. Imperial Fastener Company, Inc.
3. InPro Corporation.
4. A. R. Nelson Co.
5. Salsbury Industries.

2.2 CURTAIN TRACKS

A. Extruded-Aluminum Track: Not less than 1-1/4 inches wide by 3/4 inch high, with minimum wall thickness of 0.058 inch.

1. Curved Track: Factory fabricated 12-inch-radius bends.
2. Finish: Baked enamel, acrylic, or epoxy, white color.

B. Track Accessories: Fabricate splices, end caps, connectors, end stops, coupling and joining sleeves, wall flanges, brackets, ceiling clips, and other accessories from same material and with same finish as track.

C. Curtain Carriers: Two nylon rollers and nylon axle with chrome-plated steel, stainless steel, or aluminum hook with nickel plated steel beaded chain curtain drop.

D. Breakaway Curtain Carriers (Detention/Psychiatric): One-piece nylon breakaway curtain carriers designed to allow curtains to detach from tracks with a pulling force of no more than 22 lbf (98 N).

E. Exposed Fasteners: Stainless steel.

F. Concealed Fasteners: Hot-dip galvanized.

2.3 CURTAINS

A. Cubicle Curtain Fabric: Cubicle manufacturer's standard, as follows:

1. Color: As selected by Architect from manufacturer's full range.
2. Fiber Content: 100 percent polyester, inherently and permanently flame resistant.

B. Cubicle Curtain Fabric: Subject to compliance with requirements, provide the following:

1. Refer to Division 01 Section “Interior Design Selections”:

C. Shower Curtain Fabric: Subject to compliance with requirements, provide the following:

1. Refer to Design Selections.
2. Refer to Division 10 Section "Toilet Accessories'.

D. Mesh Top: No. 50 (1/2 inch) nylon mesh. Top 20 in (500 mm) of curtain.

1. Color: As selected by Architect from manufacturer's full range.

E. Curtain Grommets: Two-piece, rolled-edge, rustproof, nickel-plated brass; spaced not more than 6 in (150 mm) o.c.; machined into top hem.

F. Curtain Tieback: Nickel-plated brass chain; one at each curtain termination.

G. Fabrication: Fabricate curtains to comply with the following requirements:

1. Width: Finished width of panel to be 3 in (75 mm) less than specified fabric width.
2. Length: Equal to floor-to-ceiling height minus depth of track and carrier at top, and minus 15 inch distance above finished floor at bottom.
3. Mesh Top: Top hem not less than 1 in (25 mm) and not more than 1-1/2 in (38 mm) wide, triple thickness, reinforced with integral web, and double lock stitched. Double lock stitch bottom of mesh directly to 1/2 in (12 mm) triple thickness, top hem of curtain fabric.
4. Bottom Hem: Not less than 1 inch and not more than 1-1/2 in (38 mm) wide, double thickness and double lock stitched.
5. Side Hems: Not less than 1 in (25 mm) and not more than 1-1/2 in (38 mm) wide, with double thickness and double lock stitch.
6. Vertical Seams: Not less than 1/2 in (12 mm) wide, double turned and double stitched.
7. Top Hem: Triple thickness with edges turned and stitched top and bottom.

PART 3 - EXECUTION

3.1 EXAMINATION

A. Examine substrates and conditions, with Installer present, for compliance with requirements for installation tolerances, and other conditions affecting performance of work.

1. Proceed with installation only after unsatisfactory conditions have been corrected.

3.2 INSTALLATION

A. General: Install tracks level and plumb, according to manufacturer's written instructions. Provide track fabricated from one continuous length up to 16 feet.

1. Track Mounting:

a. Ceilings Heights 9'-0" and Less: Surface.
b. Ceilings Heights Greater than 9'-0": Suspended.

B. Surface Track Mounting: Fasten surface-mounted tracks at intervals of not less than 24 in (600 mm). Fasten support at each splice and tangent point of each corner. Center fasteners in track to ensure unencumbered carrier operation. Mechanically fasten to suspended ceiling grid with screws.

C. Suspended Track Mounting for High Ceilings: At ceiling heights greater than 9'-0" Install track with suspended supports at intervals of not more than 48 in (1200 mm). Fasten support at each splice and tangent point of each corner. Secure ends of track to wall with flanged fittings or brackets.

D. Track Accessories: Install splices, end caps, connectors, end stops, coupling and joining sleeves, and other accessories as required for a secure and operational installation.

E. IV Hangers: Unless otherwise indicated, install one IV hook on each IV track and hang one IV hanger.

F. Curtain Carriers: Provide curtain carriers adequate for 6 in (150 mm) spacing along the full length of the curtain plus an additional carrier.

G. Curtains: Hang curtains on each curtain track. Secure with curtain tieback.

1. Install number of curtain panel units necessary for length of track to ensure that the total length is not less than 10 percent longer than length of track.
2. Top corners of each curtain panel is to share one curtain carrier so that when leading curtain panel is pulled, then all panels are interlocked and move as one continuous curtain.

END OF SECTION

SECTION 10 2238

OPERABLE PANEL PARTITIONS

PART 1 - GENERAL

1.1 SUMMARY

A. Work required for this section includes operable panel partitions and supplementary items necessary to complete their installation.

1. Operable partitions shall be furnished as shown on the drawings complete with track, jambs, hardware as required for attaching track and jambs to the building structure, and supplementary items required to provide a complete and properly functioning installation. Exact construction details shall provide specified acoustical and functional performance.

B. Independent Testing Laboratory: This Section specifies testing and coordination for testing by Independent Testing Laboratory employed by Contractor and accepted by Architect.

1. Cost of Testing Laboratory Services shall be paid for by Contractor.
2. In event that system failures necessitate retesting, Contractor shall pay additional Testing Laboratory Service fees and any fees and expenses incurred by Owner and Architects as result of retesting.
3. Contractor shall be liable for any failure of the work to meet test requirements without adjustment to Contract Sum or Contract Schedule.

1.2 DELEGATED ENGINEERING REQUIREMENTS

A. Contract Documents Design Intent: Drawings and Specifications indicate design intent for products and systems and do not necessarily indicate or specify total Work required. Contract Documents shall not be construed as an engineered design; furnish and install all Work required for a complete installation.

B. Delegated Engineering Responsibility: Contractor shall employ a qualified professional engineer to provide engineering for products and systems including attachment to building structure required to meet design intent of Contract Documents.
1. Preparation of structural analysis data including engineering calculations, shop drawings and other submittals signed and sealed by the qualified professional engineer.

C. Delegated Engineering Professional Qualifications: Professional engineer legally authorized to practice in jurisdiction where Project is located and experienced in providing engineering services of kind indicated for products and systems similar to this Project and has a record of successful in-service performance.

D. Coordination of Work:

1. Product Variations: In the event of minor differences between products and systems of acceptable or available manufacturers, Contractor shall notify Architect of such differences and resolve conflicts in a timely manner. Failure of Contractor to provide notification shall be construed as acceptance of conditions indicated, and changes caused by minor differences between products and Contract Documents shall be included in the Work at no additional cost to Owner.
2. Allowable Adjustments: Minor dimension and profile adjustments may be made in interest of fabrication or erection methods or techniques or ability to satisfy design intent, provided design intent is maintained as determined by Architect. Proposed deviations shall include a detailed analysis of impact to adjacent substrates or other building systems, including related design or construction cost impacts. If accepted by Architect, deviations causing changes in materials, constructability, substrates, or conditions shall be included in the Work at no additional cost to Owner.

1.3 ACTION SUBMITTALS

A. Product Data: Manufacturer's technical literature for each product and system indicated.

1. Include manufacturer's specifications for materials, finishes, construction details, installation instructions, and recommendations for maintenance.
2. Include data on acoustical performance, surface-burning characteristics, and durability.

B. Shop Drawings: Show details of fabrication and installation, including plans, elevations, sections, details of components and attachments to other work. Distinguish between shop and field-assembled work.

1. Show location and extent of operable panel partitions. Include plans, elevations, sections, details, numbered panel installation sequence, attachments to other construction, and accessories. Indicate dimensions; weights; conditions at openings and for storage; and required installation, storage, and operating clearances. Indicate location and installation requirements for hardware and track, and direction of travel.

    a. Calculate requirements for supporting operable panel partitions and verify capacity of carriers and track components to support loads; indicate deflection limits for partition and adjacent construction.

2. Wiring Diagrams: For power, signal, and control wiring.

C. Coordination Drawings: Reflected ceiling plans, drawn to scale, on which the following items are shown and coordinated with each other, based on input from installers of the items involved:

1. Suspended ceiling components.
2. Structural members to which suspension systems will be attached.
3. Items penetrating finished ceiling, including the following:

    a. Lighting fixtures.
    b. HVAC ductwork, outlets, and inlets.
    c. Speakers.
    d. Sprinklers.
    e. Smoke detectors.
    f. Access panels.

4. Plenum fire and acoustical barriers.

D. Setting Drawings: For embedded items and cutouts required in other work, including support beam punching template.

E. Samples for Verification: For each type of exposed finish required, prepared on Samples of size indicated below and of same thickness and material indicated for the Work. If finishes involve normal color, pattern or texture variations, include sample sets showing the full range of variations expected.

1. Panel Facing Material: Manufacturer's standard-size unit, not less than 3 inches (75 mm) square.
2. Panel Edge Material: Not less than full width by 6 inches (150 mm) long.
3. Hardware: Mechanically operated bottom seal operating device.

1.4 INFORMATIONAL SUBMITTALS

A. Delegated Engineering Calculations: Informational submittal for products indicated to comply with design loads, include structural analysis data signed and sealed by the approved qualified engineer responsible for their preparation; test reports are not acceptable substitute for calculations.

B. Product Test Reports: Written reports based on evaluation of comprehensive tests performed by an approved qualified testing laboratory indicating that each product complies with requirements.

C. Field Quality Control Reports: Written report of testing and inspection required by "Field Quality Control".

1. After completion of installation, submit field sound transmission test data on installed work as specified hereinafter.

D. Manufacturer’s Project Acceptance Document: Certification by the manufacturer that its products and systems are approved, acceptable, suitable for use in specific locations, for specific details, and for applications indicated, specified, or required, and that a warranty will be issued.

E. Qualification Data:

1. For firms and persons specified in "Quality Assurance" to demonstrate their capabilities and experience. Include list of completed projects.

F. Warranty: Sample of warranty.

1. Provide manufacturer’s written warranty covering materials and installation (labor) stating obligations, remedies, limitations and exclusions.

1.5 CLOSEOUT SUBMITTALS

A. Maintenance Data: To include in maintenance manuals.

1. User Guide: Furnish Owner with three (3) copies of complete brochure including recommended maintenance procedures, spare parts list, operating instructions and name and address of nearest service agent.
2. Panel face finishes and finishes for exposed trim and accessories. Include precautions for cleaning materials and methods that could be detrimental to finishes and performance.
3. Seals, hardware, track, carriers, and other operating components.
4. Electric operator and controls.

1.6 MAINTENANCE MATERIAL SUBMITTALS

A. Furnish extra materials described below that match products installed and that are packaged with protective covering for storage and identified with labels describing contents.

1. Panel-Face Finish Material: Furnish full-width in quantity to cover both sides of tallest two panels when installed.

1.7 MAINTENANCE SERVICE

A. Initial Maintenance Service: Beginning at Substantial Completion, provide 12 months' full maintenance service by Installer. Include preventive maintenance, repair or replacement of worn or defective components, lubrication, cleaning, and adjusting as required for proper operation. Provide parts and supplies as used in the manufacture and installation of original equipment.

1. Perform maintenance, including emergency callback service, during normal working hours.

B. Continuing Maintenance Proposal: Provide a continuing maintenance proposal from Installer to Owner in the form of a standard yearly (or other period) maintenance agreement, starting on date initial maintenance service is concluded. State services, obligations, conditions, and terms for agreement period and for future renewal options.

1.8 QUALITY ASSURANCE

A. Manufacturer Qualifications: Manufacturer with not less than 10 years of experience in the successful production and in-service performance of products and systems similar to scope of this Project.

B. Installer Qualifications:

1. Experience: Installer's personnel with not less than 5 years of experience in the successful performance of Work similar to scope of this Project.
2. Supervision: Installer shall maintain a competent supervisor at Project while the Work is in progress, and who has not less than 5 years of experience installing products and systems similar to scope of this Project.

C. Fire-Test-Response Characteristics: Provide operable panel partitions with the following fire-test-response characteristics, as determined by testing identical products per test method indicated below by UL or another testing and inspecting agency acceptable to authorities having jurisdiction. Identify materials with appropriate markings of applicable testing and inspecting agency.

1. Surface-Burning Characteristics: As follows, per ASTM E 84:

    a. Flame Spread: 25 or less.
    b. Smoke Developed: 450 or less.

2. Fire Growth Contribution: Textile wall coverings complying with the acceptance criteria of local building code requirements.

D. Mock-ups: Prior to fabrication and installation, build mock-up for each form of construction and finish required to verify selections made under sample Submittals and to demonstrate aesthetic effects and qualities of materials and execution. Build mock-up using materials indicated for the completed Work.

1. Build mock-up in the location and of the size indicated or, if not indicated, as directed by Architect. Contractor shall provide structural support framework.

    a. Show typical components, attachments to building structure, and requirements of installation.

2. Notify Architect seven days in advance of the dates and times when mock-up will be installed.
3. Obtain Architect's acceptance of mock-ups before starting fabrication or installation.
4. Acceptance of mock-ups does not constitute acceptance of deviations from the Contract Documents contained in mock-ups unless such deviations are specifically noted by Contractor and accepted by Architect in writing.
5. Demolish and remove mock-ups when directed by Architect unless accepted to become part of the completed Work.

1.9 PRE-INSTALLATION CONFERENCE

A. Pre-Installation Conference: Before Work begins, conduct conference at Project site to comply with requirements of applicable Division 01 Sections.

1. Participants:

    a. Architect.
    b. Contractor, including superintendent.
    c. Installer, including project manager and supervisor.
    d. If requested, Manufacturer’s qualified technical representative.
    e. Installers of other construction interfaced with Work.
    f. Contractor’s Independent Testing Laboratory.

2. Minimum Agenda: Installer shall demonstrate understanding of the Work required by describing detailed procedures for preparing, installing, and cleaning the Work. Demonstration shall include, but not be limited to, following topics:

    a. Tour representative areas of Work, inspect and discuss condition of substrate, and other preparatory work performed by other trades.
    b. Review Contract Document requirements.
    c. Review approved submittals.
    d. Review inspection and testing requirements.
    e. Review environmental conditions and procedures for coping with unfavorable conditions.

f. Resolve deviations or differences between Contract Documents and the manufacturer's specifications.

3. Record discussions, including decisions and agreements, and prepare report.

1.10 PROJECT CONDITIONS

A. Field Measurements: Where products and systems are indicated to fit walls and other construction, verify dimensions by field measurements before fabrication.

1. Operable partition shall be installed to close across area with smooth floor surface, with variance less than or equal to 1/8 inch (3 mm).
2. Preparation of opening shall conform to the criteria set forth per ASTM E557 Standard Practice for Architectural Application and Installation of Operable Partitions. Plenum barrier construction shall provide an STC rating greater than or equal to that of scheduled Operable Partitions.

1.11 COORDINATION

A. Coordinate installation of products and systems with interfacing and adjoining construction to provide a successful installation without failure.

1.12 WARRANTY

A. Manufacturer's Warranty: Manufacturer agrees to repair or replace components of operable panel partitions that fail in materials or workmanship within specified warranty period.

1. Failures include, but are not limited to, the following:

a. Faulty operation of operable panel partitions.
b. Deterioration of metals, metal finishes, and other materials beyond normal use.

2. Warranty Period: 2 years from date of Substantial Completion.

B. Manufacturer's Warranty: Furnish manufacturer's written material and labor warranty signed by an authorized representative using manufacturer's standard form agreeing to furnish materials and labor required to repair or replace work which exhibits material defects caused by manufacture or design and installation of product. "Defects" is defined to include but not limited to deterioration or failure to perform as required.

1. Failures include, but are not limited to, the following:

a. Structural failures including, but not limited to, excessive deflection.
b. Faulty operation of operable panel partitions
c. Deterioration of metals, metal finishes and other materials beyond normal wear.

2. Warranty Period: Manufacturer shall warrant the products to be free from material and labor Defects for the following period of years from date of issuance of The Certificate of Substantial Completion.

a. Panel Warranty Period:

1) Base Bid: 2 years.

2) Alternate Bid: 10 years.

b. Trolley and Mechanically Operated Retractable Seals: 10 years.
c. Track, Brackets, Switches and Curves: 10 years.
d. Fixed Horizontal Top Seals: Lifetime of installation

C. Installer's Warranty: Furnish installer's written workmanship warranty signed by an authorized representative using installer's standard form agreeing to provide labor required to repair or replace work which exhibits workmanship defects. "Defects" is defined to include but not limited to deterioration or failure to perform as required.

1. Warranty Period: Installer shall warrant the installation to be free from workmanship Defects for a period of 2 years from date of issuance of The Certificate of Substantial Completion.

PART 2 - PRODUCTS

2.1 MANUFACTURERS AND PRODUCTS

A. Acceptable Manufacturers and Products: Subject to compliance with requirements of Contract Documents as judged by the Architect, provide product by one of manufacturers listed. If not listed, submit as substitution according to the Conditions of the Contract and Division 01 Section "Substitution Procedures".

B. Available Manufacturers and Products: Subject to compliance with requirements of Contract Documents as judged by the Architect, manufacturers offering products that may be incorporated into the Work include, but are not limited to, those listed.

1. Manufacturers and Products - Ballrooms:

a. Advanced Equipment Corporation; Alpha Series, Type U.
b. Hufcor Inc.; 641 Series, Track 11.
c. Modernfold Inc.; Encore Series, Track 14.

2. Manufacturers and Products - Meeting Rooms:

a. Advanced Equipment Corporation; Alpha Series, Type T.
b. Hufcor Inc.; 631 Series, Track 11.
c. Modernfold Inc.; Encore Series, Track 14.

C. Basis of Design (Product Standard): Contract Documents are based on products and systems specified to establish a standard of quality. Other manufacturers offering products having equivalent characteristics may be considered, provided deviations are minor and comply with requirements of Contract Documents as judged by the Architect.

1. Manufacturer and Product: Modernfold, Inc.; Encore Series

2.2 MATERIALS, GENERAL

A. Single Source Responsibility: Furnish each type of product from single manufacturer. Provide secondary materials only as recommended by manufacturer of primary materials.

2.3 PERFORMANCE REQUIREMENTS

A. General Performance: Engineer products and systems to withstand loads within limits of allowable working stresses of the materials involved under conditions indicated and without permanent deformation or failure of materials.

B. Design Loads: Engineer to withstand design loads including but not limited to gravity, wind, seismic, and erection design loads and thermal movements established by authorities having jurisdiction, applicable local building codes, and as indicated.

1. Structural Movement: Engineer to withstand movements of structure including, but not limited to, drift, twist, column shortening, long-term creep and deflection from uniformly distributed and concentrated live loads. Contractor shall obtain required design data and identify movements accommodated on submittal drawings.

a. Review partition loading with Architect to verify that allowable deflection of supporting structure will not restrict partition operation nor affect partition acoustics

2. Deflection of Supporting Structure: Operable panel wall system shall be capable of withstanding building movements within the following limitations:

a. Total Deflection - Ballrooms: Not to exceed 1.5 inch (38 mm).
b. Total Deflection - Meeting Rooms: Not to exceed 0.75 inch (19 mm).
c. Total Deflection: Not to exceed 0.75 inch (19 mm).

C. Acoustical Characteristics:

1. Noise Isolation Class (NIC): Manufacturer shall submit results of Noise Isolation Class (NIC) tests conducted by an independent testing agency of the same type wall systems, and of similar height and width, in accordance with ASTM E336-90.

a. Single Partitions: Refer to schedule at end of this section.

2. Sound Transmission Class (STC): Manufacturer shall submit Laboratory test data performed in accordance with ASTM E90 and E413.

a. Single Partitions: Refer to schedule at end of this section.
b. STC: Not less than 52.

D. Dimensional Tolerances: Engineer products and systems to accommodate dimensional tolerances of framing members and adjacent construction.

2.4 MATERIALS

A. Steel Frame: Steel sheet, not less than 0.0598 inch (1.5 mm), 16 gage nominal specified thickness for uncoated steel.

B. Aluminum Trim: Alloy and temper recommended by aluminum producer and finisher for type of use, corrosion resistance, and finish indicated; ASTM B 221 for extrusions; manufacturer's standard strengths and thicknesses for type of use.

C. Steel Face/Liner Sheets: Tension-leveled steel sheet, not less than nominal specified thickness for uncoated steel.

2.5 OPERABLE PANEL PARTITIONS

A. Panel Construction: Provide top reinforcement as required to support panel from suspension components and provide reinforcement for hardware attachment. Fabricate panels with tight hairline joints and concealed fasteners. Fabricate panels so finished in-place partition is rigid; level; plumb; aligned, with tight joints and uniform appearance; and free of bow, warp, twist, deformation, and surface and finish irregularities.

1. Panel Faces: Tension-leveled steel sheet, minimum 16 gage nominal thickness or 18 gage nominal thickness; with laminated gypsum backer panel.

B. Dimensions: Fabricate operable panel partitions, from manufacturer's standard sizes, to form an assembled system of dimensions indicated on Drawings and verified by field measurements.

C. Cap-Trimmed Edges: If applicable, protective aluminum top and bottom edge trim with tight hairline joints concealing edges of panel and finish facing. One of the following as selected by Architect:

1. Anodized Finish: Manufacturer's standard clear anodized.
2. Powder Coat Finish: Manufacturer's standard baked polymer thermosetting powder finish.

D. Vertical Trimless Edges: Fabricate vertical exposed panel edges so finish facing wraps uninterrupted around panel, covering edge and resulting in an installed partition with facing visible on vertical panel edges, without trim, for minimal sightlines at panel-to-panel joints.

E. Operable Panel Partition Characteristics:

1. Each partition shall consist of panels of steel frame construction with internal glass fiber fill and sound barrier septum, as required, to achieve the specified design criteria. Panel construction shall be fabricated from formed steel with overlapped and welded corners for rigidity. Top channel shall be reinforced to support suspension system components.
2. Individual panels shall have roll-formed steel wrapping around panel edge. Panel skins shall be lock formed and welded directly to the frame for unitized construction.

F. Hardware: Manufacturer's standard as required to operate operable panel partition and accessories; with decorative, protective finish.

G. Panel Thickness: As scheduled at the end of this section.

2.6 SEALS

A. General: Provide types of acoustical seals that produce operable panel partitions complying with acoustical performance requirements and the following:

1. Seals made from materials and profiles that minimize sound leakage.
2. Seals fitting tight at contact surfaces and sealing continuously between adjacent panels and between operable panel partition perimeter and adjacent surfaces, when operable panel partition is extended, closed, and in place.

B. Vertical Seals: Deep-nesting, interlocking astragals mounted on each edge of panel, with continuous PVC acoustical seal.

C. Horizontal Top Seals: Continuous contact extruded vinyl bulb shaped sweeps with pairs of non-contacting vinyl fingers or PVC-faced, mechanical, constant-force-contact seal exerting uniform constant pressure on track when extended, ensuring horizontal and vertical sealing and resisting panel movement.

D. Horizontal Bottom Seals: PVC-faced, mechanical, retractable, constant-force-contact seal exerting uniform constant pressure on floor when extended, ensuring horizontal and vertical sealing and resisting panel movement.

1. Mechanically Operated: Extension and retraction of bottom seal by operating handle or built-in operating mechanism, with operating range and required operating clearance between retracted seal and floor finish. Partition manufacturer shall confirm deflection requirements to confirm bottom seal operating clearance and requirements.

a. Horizontal Bottom Drop Seals: As scheduled at the end of this section.

2.7 FINISH FACING

A. General: Install finish facings that comply with indicated fire-test-response characteristics and that are factory applied to operable panel partitions with appropriate backing, using mildew-resistant nonstaining adhesive as recommended by facing manufacturer's written instructions.

1. Apply one-piece, seamless facings free of air bubbles, wrinkles, blisters, and other defects, with edges tightly butted, and with invisible seams complying with Shop Drawings for location, and with no gaps or overlaps. Horizontal butted edges and seams are not permitted. Tightly secure and conceal raw and selvage edges of facing for finished appearance.
2. Where facings with directional or repeating patterns or directional weave are indicated, mark facing top and attach facing in same direction.
3. Match facing pattern 72 inches (1800 mm) above finished floor.

B. Vinyl-Coated Fabric Wall Covering: Manufacturer's standard, mildew-resistant, washable, vinyl-coated fabric wall covering; complying with CFFA-W-101-D for type indicated; Class A.

1. Antimicrobial Treatment: Additives capable of inhibiting growth of bacteria, fungi, and yeasts.

2.8 SUSPENSION SYSTEMS

A. Suspension Tracks: Steel tracks with steel running surfaces and adjustable steel hanger rods for overhead support, designed for type of operation, size, and weight of operable panel partition indicated. Size track to support partition operation and storage without damage to suspension system, operable panel partitions, or adjacent construction. Limit track deflection to no more than 0.10 inch (2.5 mm) between bracket supports. Provide a continuous system of track sections and accessories to accommodate configuration and layout indicated for partition operation and storage.

1. Panel Guide: Aluminum; finished with factory-applied, decorative, protective finish.
2. Head Closure Trim: As required for acoustical performance; with factory-applied, decorative, protective finish selected by Architect from manufacturer's full range.

B. Carriers: Trolley system as required for configuration type, size, and weight of partition and for easy operation; with precision ground, sealed, ball-bearing, steel-tired wheels. Trolley shall be pre-programmed at the factory to allow automatic indexing of panels into pocket areas.

C. Track Intersections, Switches, and Accessories: As required for type of operation, storage, track configuration, and layout indicated for operable panel partition and compatible with partition assembly specified. Fabricate track intersections and switches from steel with steel running surfaces. Track design will incorporate smooth switches and curves to accommodate pre-programmed automatic indexing trolleys.

D. Aluminum Finish: Clear anodized, factory-applied, decorative finish, unless otherwise indicated.

E. Steel Finish: Factory-applied, corrosion-resistant, protective coating, unless otherwise indicated.

2.9 ELECTRIC OPERATORS

A. General: Factory-assembled electric operation system of size and capacity recommended and provided by operable panel partition manufacturer for partition specified; with electric motor and factory-prewired motor controls, speed reducer, chain drive, control stations, control devices, and accessories required for operation. Include wiring from control stations to motor. Coordinate operator wiring requirements and electrical characteristics with building electrical system.

B. Comply with NFPA 70.

C. Control Equipment: Comply with NEMA ICS 1, NEMA ICS 2, and NEMA ICS 6.

D. Motor Electrical Characteristics: Sufficient to start, accelerate, and operate connected loads at designated speeds, within installed environment, with indicated operating sequence, and without exceeding nameplate rating or considering service factor. Comply with NEMA MG 1.

E. Control Stations: Two single-key-operated, constant-pressure control stations located remotely from each other on opposite sides and opposite ends of partition run. Wire in series to require simultaneous activation of both key stations to operate partition. Each three-position control station labeled "Open," "Close," and "Off." Furnish two keys per station.

F. Obstruction-Detection Devices: Equip each motorized operable panel partition with indicated automatic safety sensor that causes operator to immediately stop and reverse direction.

1. Sensor Edge: Contact-pressure-sensitive safety edge along partition's leading edge.
2. Sensor Mat: Electrically operated, contact-weight-sensitive safety mat in storage pocket area.

G. Limit Switches: Adjustable switches, interlocked with motor controls and set to automatically stop operable panel partition at fully extended and fully stacked positions.

H. Emergency Release Mechanism: Quick disconnect-release of electric-motor drive system, permitting manual operation in event of operating failure.

I. Electric Interlock: Equip each motorized operable panel partition with electric interlocks at locations indicated, to prevent operation of operable panel partition under the following conditions:

1. On storage pocket door, to prevent operation if door is not in fully open position.
2. On partitions at location of convergence by another partition, to prevent operation if merging partitions are in place.

2.10 ACCESSORIES

A. Storage Pocket Door: Full height at end of partition runs to conceal stacked partition; of same materials, finish, construction, thickness, and acoustical qualities as panels; complete with operating hardware. Hinges in finish to match other exposed hardware. Provide pocket door configuration that allows partition seal to back of pocket.

1. Rim Lock: Deadlock to receive cylinder, to secure storage pocket door in closed position. See Division 08 section "Door Hardware" for lock cylinder and keying requirements.

B. Pass Door; Single Leaf:

1. Pass Door: Matching pass door same thickness and appearance as partition panels. ADA compliant pass door shall be trimless and equipped with lever latch and push bar for panic operation. Threshold will not be permitted.
2. Closers: Concealed automatic door closures with full 180 degree opening range and hold open capability.
3. Exit Signs: Self illuminated chemical exit signs.
4. Panic Hardware: Recessed lever latch and recessed push bar. Surface mount push bar is not permitted. Push/pull knob or drop ring latch is not permitted.
5. Hinges: SOSS invisible hinges. Barrel or piano hinges are not permitted.
6. Trimless: Perimeter trim around door is not permitted. Splice in panel face at top of door is not permitted.
7. Viewer: Recessed door viewer.
8. Deadbolt Lock: Prepare door for lock cylinder.
9. Seals: Operable seals in door and adjacent panel legs, operable from edge of panel and door. Face operated seals on door or panel leg are not permitted.

PART 3 - EXECUTION

3.1 EXAMINATION

A. Acceptance of Surfaces and Conditions: Examine substrates to receive products and systems and associated work for compliance with requirements and other conditions affecting performance. Proceed only when unsatisfactory conditions have been corrected in a manner complying with Contract Documents. Starting work within a particular area will be construed as acceptance of surface conditions.

B. Examine flooring, structural support, and opening, with Installer present, for compliance with requirements for installation tolerances and other conditions affecting performance of operable panel partitions.

1. The operable wall sub-contractor shall take responsibility for the ceiling/floor void barriers, interfaces with walls, etc and other associated constructions which may form possible significant noise flanking paths (if deemed necessary by the sub-contractor). These constructions shall be designed and installed such that the overall site sound separation performance requirements are met. The sub-contractor shall include the associated works within the sub-contract and/or approve the design and site installation of the associated constructions, prior to site level difference testing, sufficient for the sub-contractor to guarantee overall performance without doubt as to contractual responsibilities.

3.2 INSTALLATION, GENERAL

A. Installation Quality Standards: In addition to standards listed elsewhere, perform Work according to following, unless otherwise specified:

1. Comply with ASTM E 557.
2. Respective manufacturer's written installation instructions.
3. Accepted submittals.
4. Contract Documents.

3.3 PREPARATION

A. General: Comply with manufacturer's instructions, recommendations, and specifications for cleaning and surface preparation. Surfaces shall have no defects, contaminants, or errors which would result in poor or potentially defective installation or would cause latent defects in Work.

3.4 INSTALLATION OF OPERABLE PANEL PARTITIONS

A. Install operable panel partitions and accessories after other finishing operations, including painting, have been completed. Broken, cracked, chipped, deformed, or unmatched panels are not acceptable.

B. Installation personnel, experienced in the erection of the particular operable wall system furnished, shall be closely supervised by technician employed directly by the partition manufacturer.

3.5 FIELD QUALITY CONTROL

A. Manufacturer's Field Service: Manufacturer's qualified technical representative shall periodically inspect Work to ensure installation is proceeding in accordance with manufacturer's designs, recommendations, instructions and warranty requirements. Representative shall submit written reports of each visit indicating observations, findings, and conclusions of inspection.

1. Manufacturer's Technical Representative Qualifications: Direct employee of technical services department of manufacturer with experience in providing recommendations, observations, evaluations, and problem diagnostics.

B. Testing Laboratory Field Service: Contractor shall engage and pay an approved qualified independent testing laboratory to perform field quality control. Materials and installation failing to meet specified requirements shall be replaced at Contractor's expense. Retesting of materials and installations failing to meet specified requirements shall be done at Contractor's expense.

1. Upon completion of this portion of the work, and prior to its acceptance by the Owner, the partition shall be set up by the manufacturer and field sound tested. Test price shall be included in the bid price. Prior to testing the operable partitions, the Architect and the partition manufacturer's representative will examine flanking paths through the surrounding building construction to determine that they will not significantly affect the performance of the operable partitions. The manufacturer shall complete the test with the Owner's Representative in attendance and shall make partition adjustments as required.
2. Light Leakage Testing: Illuminate one side of partition installation and observe vertical joints and top / bottom seals; adjust partitions to eliminate voids.
3. Noise Isolation Class (NIC) Testing: Perform testing of installed operable panel partitions for noise isolation according to ASTM E 336, determined by ASTM E413, and rated for not less than NIC indicated. Adjust partitions to comply with requirements.
4. Extent of Testing: Testing agency shall randomly select partition installation for testing.
5. Repair or replace partitions where test results indicate partitions do not comply with requirements; retest partitions.
6. Additional testing and inspections, at Contractor's expense, shall be performed to determine compliance with requirements.

3.6 ADJUSTING

A. Adjust operable panel partitions and pocket doors to operate smoothly, easily, and quietly, free from binding, warp, excessive deflection, distortion, nonalignment, misplacement, disruption, or malfunction, throughout entire operational range. Lubricate hardware and other moving parts.

B. Electric Operator: Adjust operable panel partitions, hardware, electric operator, and other moving parts to function smoothly, and lubricate as recommended by manufacturer.

C. Storage Pocket Doors: Adjust storage pocket doors to operate smoothly and easily, without binding or warping.

D. Pass Doors: Adjust pass doors to operate smoothly and easily, without binding or warping.

3.7 CLEANING AND PROTECTION

A. Clean soiled surfaces on completing installation of operable panel partitions, to remove dust, adhesives, and other foreign materials according to manufacturer's written instructions.

B. Provide final protection and maintain conditions, in a manner acceptable to manufacturer and installer that ensure operable panel partitions are without damage or deterioration at time of Substantial Completion.

C. Replace panels that cannot be cleaned and repaired, in a manner accepted by Architect, before time of Substantial Completion.

3.8 DEMONSTRATION

A. Engage a factory-authorized service representative to train Owner's maintenance personnel to adjust, operate, and maintain operable panel partitions.

1. Test and adjust seals, hardware, carriers, tracks, and other operable components. Replace damaged or malfunctioning operable components.
2. Train Owner's maintenance personnel on procedures and schedules for starting and stopping, troubleshooting, servicing, and maintaining equipment and schedules.
3. Review data in maintenance manuals. Refer to Division 01 Section "Closeout Procedures".

A. **OPERABLE PANEL PARTITION SCHEDULE:** See Interior Finish Legend on drawings.

END OF SECTION

SECTION 10 2115

CUBICLE SPECIALTIES

PART 1 - GENERAL

1.1 SUMMARY

A. Work required for this section includes cubicle specialties and supplementary items necessary to complete their installation.

1.2 SUBMITTALS

A. Product Data: Submit manufacturer's specifications to evidence compliance with these specifications.

B. Shop Drawings:

1. Show details of the system, related construction and reflected layout of ceiling areas showing location of tracks in relation to other ceiling mounted items.
2. Indicate materials, finishes, dimensions, thicknesses and/or gages of parts, reinforcement, where applicable, and anchorage including items of hardware and accessories necessary for complete installation.

C. Samples for Verification: Full-size units of each type of the following products:

1. Curtain Fabric: 12 in (300 mm) square swatch or larger Sample as required to show complete pattern repeat, from dye lot used for the Work, with specified treatments applied. Mark top and face of material.
2. Curtain Track: Not less than 4 in (100 mm) long.
3. Curtain Carrier: Full-size unit.
4. IV Track: Not less than 4 in (100 mm) long.
5. IV Hanger: Full-size unit.

D. Cubicle Schedule: Use same room designations as indicated on Drawings.

1.3 CLOSEOUT SUBMITTALS

A. Maintenance Data: For each product if specified to include in maintenance manuals specified in Division 01.

1.4 MAINTENANCE MATERIAL SUBMITTALS

A. Furnish extra materials described below, before installation begins, that match products installed and that are packaged with protective covering for storage and identified with labels describing contents.

1. Curtain Carriers and Track End Caps: Full-size units equal to 3 percent of quantity installed for each size indicated, but not less than 10 units.
2. Curtains: Full-size units equal to 10 percent of quantity installed, but not less than 2 units.

1.5 QUALITY ASSURANCE

A. Mockup: Build mockup to verify selections made under Sample submittals and to demonstrate aesthetic effects and qualities of materials and execution.

1. Build mockup of typical cubicle, complete with tracks, IV hanger, and curtain if specified.
2. Approved mockup may become part of the completed Work if undisturbed at time of Substantial Completion.

1.6 PROJECT CONDITIONS

A. Environmental Limitations: Do not install cubicle specialties until spaces are enclosed and weatherproof, wet work in spaces is complete and dry, work above ceilings is complete, and ambient temperature and humidity conditions are maintained at the levels indicated for Project when occupied for its intended use.

B. Field Measurements: Where products and systems are indicated to fit walls and other construction, verify dimensions by field measurements before fabrication.

PART 2 - PRODUCTS

2.1 MANUFACTURERS AND PRODUCTS

A. Acceptable Manufacturers and Products: Subject to compliance with requirements of Contract Documents as judged by the Architect, provide product by one of manufacturers listed. If not listed, submit as substitution according to the Conditions of the Contract and Division 01 Section "Substitution Procedures".

1. C/S Cubicle Curtains.
2. Imperial Fastener Company, Inc.
3. InPro Corporation.
4. A. R. Nelson Co.
5. Salsbury Industries.

2.2 CURTAIN TRACKS

A. Extruded-Aluminum Track: Not less than 1-1/4 inches wide by 3/4 inch high, with minimum wall thickness of 0.058 inch.

1. Curved Track: Factory fabricated 12-inch-radius bends.
2. Finish: Baked enamel, acrylic, or epoxy, white color.

B. Track Accessories: Fabricate splices, end caps, connectors, end stops, coupling and joining sleeves, wall flanges, brackets, ceiling clips, and other accessories from same material and with same finish as track.

C. Curtain Carriers: Two nylon rollers and nylon axle with chrome-plated steel, stainless steel, or aluminum hook with nickel plated steel beaded chain curtain drop.

D. Breakaway Curtain Carriers (Detention/Psychiatric): One-piece nylon breakaway curtain carriers designed to allow curtains to detach from tracks with a pulling force of no more than 22 lbf (98 N).

E. Exposed Fasteners: Stainless steel.

F. Concealed Fasteners: Hot-dip galvanized.

2.3 CURTAINS

A. Cubicle Curtain Fabric: Cubicle manufacturer's standard, as follows:

1. Color: As selected by Architect from manufacturer's full range.
2. Fiber Content: 100 percent polyester, inherently and permanently flame resistant.

B. Cubicle Curtain Fabric: Subject to compliance with requirements, provide the following:

1. Refer to Division 01 Section “Interior Design Selections”:

C. Shower Curtain Fabric: Subject to compliance with requirements, provide the following:

1. Refer to Design Selections.
2. Refer to Division 10 Section "Toilet Accessories'.

D. Mesh Top: No. 50 (1/2 inch) nylon mesh. Top 20 in (500 mm) of curtain.

1. Color: As selected by Architect from manufacturer's full range.

E. Curtain Grommets: Two-piece, rolled-edge, rustproof, nickel-plated brass; spaced not more than 6 in (150 mm) o.c.; machined into top hem.

F. Curtain Tieback: Nickel-plated brass chain; one at each curtain termination.

G. Fabrication: Fabricate curtains to comply with the following requirements:

1. Width: Finished width of panel to be 3 in (75 mm) less than specified fabric width.
2. Length: Equal to floor-to-ceiling height minus depth of track and carrier at top, and minus 15 inch distance above finished floor at bottom.
3. Mesh Top: Top hem not less than 1 in (25 mm) and not more than 1-1/2 in (38 mm) wide, triple thickness, reinforced with integral web, and double lock stitched. Double lock stitch bottom of mesh directly to 1/2 in (12 mm) triple thickness, top hem of curtain fabric.
4. Bottom Hem: Not less than 1 inch and not more than 1-1/2 in (38 mm) wide, double thickness and double lock stitched.
5. Side Hems: Not less than 1 in (25 mm) and not more than 1-1/2 in (38 mm) wide, with double thickness and double lock stitch.
6. Vertical Seams: Not less than 1/2 in (12 mm) wide, double turned and double stitched.
7. Top Hem: Triple thickness with edges turned and stitched top and bottom.

PART 3 - EXECUTION

3.1 EXAMINATION

A. Examine substrates and conditions, with Installer present, for compliance with requirements for installation tolerances, and other conditions affecting performance of work.

1. Proceed with installation only after unsatisfactory conditions have been corrected.

3.2 INSTALLATION

A. General: Install tracks level and plumb, according to manufacturer's written instructions. Provide track fabricated from one continuous length up to 16 feet.

1. Track Mounting:

a. Ceilings Heights 9'-0" and Less: Surface.
b. Ceilings Heights Greater than 9'-0": Suspended.

B. Surface Track Mounting: Fasten surface-mounted tracks at intervals of not less than 24 in (600 mm). Fasten support at each splice and tangent point of each corner. Center fasteners in track to ensure unencumbered carrier operation. Mechanically fasten to suspended ceiling grid with screws.

C. Suspended Track Mounting for High Ceilings: At ceiling heights greater than 9'-0" Install track with suspended supports at intervals of not more than 48 in (1200 mm). Fasten support at each splice and tangent point of each corner. Secure ends of track to wall with flanged fittings or brackets.

D. Track Accessories: Install splices, end caps, connectors, end stops, coupling and joining sleeves, and other accessories as required for a secure and operational installation.

E. IV Hangers: Unless otherwise indicated, install one IV hook on each IV track and hang one IV hanger.

F. Curtain Carriers: Provide curtain carriers adequate for 6 in (150 mm) spacing along the full length of the curtain plus an additional carrier.

G. Curtains: Hang curtains on each curtain track. Secure with curtain tieback.

1. Install number of curtain panel units necessary for length of track to ensure that the total length is not less than 10 percent longer than length of track.
2. Top corners of each curtain panel is to share one curtain carrier so that when leading curtain panel is pulled, then all panels are interlocked and move as one continuous curtain.

END OF SECTION

SECTION 10 2238

OPERABLE PANEL PARTITIONS

PART 1 - GENERAL

1.1 SUMMARY

A. Work required for this section includes operable panel partitions and supplementary items necessary to complete their installation.

1. Operable partitions shall be furnished as shown on the drawings complete with track, jambs, hardware as required for attaching track and jambs to the building structure, and supplementary items required to provide a complete and properly functioning installation. Exact construction details shall provide specified acoustical and functional performance.

B. Independent Testing Laboratory: This Section specifies testing and coordination for testing by Independent Testing Laboratory employed by Contractor and accepted by Architect.

1. Cost of Testing Laboratory Services shall be paid for by Contractor.
2. In event that system failures necessitate retesting, Contractor shall pay additional Testing Laboratory Service fees and any fees and expenses incurred by Owner and Architects as result of retesting.
3. Contractor shall be liable for any failure of the work to meet test requirements without adjustment to Contract Sum or Contract Schedule.

~~1.2 DELEGATED ENGINEERING REQUIREMENTS~~

~~A. Contract Documents Design Intent: Drawings and Specifications indicate design intent for products and systems and do not necessarily indicate or specify total Work required. Contract Documents shall not be construed as an engineered design; furnish and install all Work required for a complete installation.~~

~~B. Delegated Engineering Responsibility: Contractor shall employ a qualified professional engineer to provide engineering for products and systems including attachment to building structure required to meet design intent of Contract Documents.~~

~~1. Preparation of structural analysis data including engineering calculations, shop drawings and other submittals signed and sealed by the qualified professional engineer.~~

~~C. Delegated Engineering Professional Qualifications: Professional engineer legally authorized to practice in jurisdiction where Project is located and experienced in providing engineering services of kind indicated for products and systems similar to this Project and has a record of successful in-service performance.~~

~~D. Coordination of Work:~~

1. ~~Product Variations: In the event of minor differences between products and systems of acceptable or available manufacturers, Contractor shall notify Architect of such differences and resolve conflicts in a timely manner. Failure of Contractor to provide notification shall be construed as acceptance of conditions indicated, and changes caused by minor differences between products and Contract Documents shall be included in the Work at no additional cost to Owner.~~
2. ~~Allowable Adjustments: Minor dimension and profile adjustments may be made in interest of fabrication or erection methods or techniques or ability to satisfy design intent, provided design intent is maintained as determined by Architect. Proposed deviations shall include a detailed analysis of impact to adjacent substrates or other building systems, including related design or construction cost impacts. If accepted by Architect, deviations causing changes in materials, constructability, substrates, or conditions shall be included in the Work at no additional cost to Owner.~~

1.3 ACTION SUBMITTALS

A. Product Data: Manufacturer's technical literature for each product and system indicated.

1. Include manufacturer's specifications for materials, finishes, construction details, installation instructions, and recommendations for maintenance.
2. Include data on acoustical performance, surface-burning characteristics, and durability.

B. Shop Drawings: Show details of fabrication and installation, including plans, elevations, sections, details of components and attachments to other work. Distinguish between shop and field-assembled work.

1. Show location and extent of operable panel partitions. Include plans, elevations, sections, details, numbered panel installation sequence, attachments to other construction, and accessories. Indicate dimensions; weights; conditions at openings and for storage; and required installation, storage, and operating clearances. Indicate location and installation requirements for hardware and track, and direction of travel.

    a. Calculate requirements for supporting operable panel partitions and verify capacity of carriers and track components to support loads; indicate deflection limits for partition and adjacent construction.

2. Wiring Diagrams: For power, signal, and control wiring.

C. Coordination Drawings: Reflected ceiling plans, drawn to scale, on which the following items are shown and coordinated with each other, based on input from installers of the items involved:

1. Suspended ceiling components.
2. Structural members to which suspension systems will be attached.
3. Items penetrating finished ceiling, including the following:

    a. Lighting fixtures.
    b. HVAC ductwork, outlets, and inlets.
    c. Speakers.
    d. Sprinklers.
    e. Smoke detectors.
    f. Access panels.

4. Plenum fire and acoustical barriers.

D. Setting Drawings: For embedded items and cutouts required in other work, including support beam punching template.

E. Samples for Verification: For each type of exposed finish required, prepared on Samples of size indicated below and of same thickness and material indicated for the Work. If finishes involve normal color, pattern or texture variations, include sample sets showing the full range of variations expected.

1. Panel Facing Material: Manufacturer's standard-size unit, not less than 3 inches (75 mm) square.
2. Panel Edge Material: Not less than full width by 6 inches (150 mm) long.
3. Hardware: Mechanically operated bottom seal operating device.

1.4 INFORMATIONAL SUBMITTALS

A. Delegated Engineering Calculations: Informational submittal for products indicated to comply with design loads, include structural analysis data signed and sealed by the approved qualified engineer responsible for their preparation; test reports are not acceptable substitute for calculations.

B. Product Test Reports: Written reports based on evaluation of comprehensive tests performed by an approved qualified testing laboratory indicating that each product complies with requirements.

C. Field Quality Control Reports: Written report of testing and inspection required by "Field Quality Control".

1. After completion of installation, submit field sound transmission test data on installed work as specified hereinafter.

D. Manufacturer’s Project Acceptance Document: Certification by the manufacturer that its products and systems are approved, acceptable, suitable for use in specific locations, for specific details, and for applications indicated, specified, or required, and that a warranty will be issued.

E. Qualification Data:

1. For firms and persons specified in "Quality Assurance" to demonstrate their capabilities and experience. Include list of completed projects.

F. Warranty: Sample of warranty.

1. Provide manufacturer’s written warranty covering materials and installation (labor) stating obligations, remedies, limitations and exclusions.

1.5 CLOSEOUT SUBMITTALS

A. Maintenance Data: To include in maintenance manuals.

1. User Guide: Furnish Owner with three (3) copies of complete brochure including recommended maintenance procedures, spare parts list, operating instructions and name and address of nearest service agent.
2. Panel face finishes and finishes for exposed trim and accessories. Include precautions for cleaning materials and methods that could be detrimental to finishes and performance.
3. Seals, hardware, track, carriers, and other operating components.
4. Electric operator and controls.

1.6 MAINTENANCE MATERIAL SUBMITTALS

A. Furnish extra materials described below that match products installed and that are packaged with protective covering for storage and identified with labels describing contents.

1. Panel-Face Finish Material: Furnish full-width in quantity to cover both sides of tallest two panels when installed.

1.7 MAINTENANCE SERVICE

A. Initial Maintenance Service: Beginning at Substantial Completion, provide 12 months' full maintenance service by Installer. Include preventive maintenance, repair or replacement of worn or defective components, lubrication, cleaning, and adjusting as required for proper operation. Provide parts and supplies as used in the manufacture and installation of original equipment.

1. Perform maintenance, including emergency callback service, during normal working hours.

B. Continuing Maintenance Proposal: Provide a continuing maintenance proposal from Installer to Owner in the form of a standard yearly (or other period) maintenance agreement, starting on date initial maintenance service is concluded. State services, obligations, conditions, and terms for agreement period and for future renewal options.

1.8 QUALITY ASSURANCE

A. Manufacturer Qualifications: Manufacturer with not less than 10 years of experience in the successful production and in-service performance of products and systems similar to scope of this Project.

B. Installer Qualifications:

1. Experience: Installer's personnel with not less than 5 years of experience in the successful performance of Work similar to scope of this Project.
2. Supervision: Installer shall maintain a competent supervisor at Project while the Work is in progress, and who has not less than 5 years of experience installing products and systems similar to scope of this Project.

C. Fire-Test-Response Characteristics: Provide operable panel partitions with the following fire-test-response characteristics, as determined by testing identical products per test method indicated below by UL or another testing and inspecting agency acceptable to authorities having jurisdiction. Identify materials with appropriate markings of applicable testing and inspecting agency.

1. Surface-Burning Characteristics: As follows, per ASTM E 84:

    a. Flame Spread: 25 or less.
    b. Smoke Developed: 450 or less.

2. Fire Growth Contribution: Textile wall coverings complying with the acceptance criteria of local building code requirements.

D. Mock-ups: Prior to fabrication and installation, build mock-up for each form of construction and finish required to verify selections made under sample Submittals and to demonstrate aesthetic effects and qualities of materials and execution. Build mock-up using materials indicated for the completed Work.

1. Build mock-up in the location and of the size indicated or, if not indicated, as directed by Architect. Contractor shall provide structural support framework.

    a. Show typical components, attachments to building structure, and requirements of installation.

2. Notify Architect seven days in advance of the dates and times when mock-up will be installed.
3. Obtain Architect's acceptance of mock-ups before starting fabrication or installation.
4. Acceptance of mock-ups does not constitute acceptance of deviations from the Contract Documents contained in mock-ups unless such deviations are specifically noted by Contractor and accepted by Architect in writing.
5. Demolish and remove mock-ups when directed by Architect unless accepted to become part of the completed Work.

1.9 PRE-INSTALLATION CONFERENCE

A. Pre-Installation Conference: Before Work begins, conduct conference at Project site to comply with requirements of applicable Division 01 Sections.

1. Participants:

    a. Architect.
    b. Contractor, including superintendent.
    c. Installer, including project manager and supervisor.
    d. If requested, Manufacturer’s qualified technical representative.
    e. Installers of other construction interfaced with Work.
    f. Contractor’s Independent Testing Laboratory.

2. Minimum Agenda: Installer shall demonstrate understanding of the Work required by describing detailed procedures for preparing, installing, and cleaning the Work. Demonstration shall include, but not be limited to, following topics:

    a. Tour representative areas of Work, inspect and discuss condition of substrate, and other preparatory work performed by other trades.
    b. Review Contract Document requirements.
    c. Review approved submittals.
    d. Review inspection and testing requirements.
    e. Review environmental conditions and procedures for coping with unfavorable conditions.

f. Resolve deviations or differences between Contract Documents and the manufacturer's specifications.

3. Record discussions, including decisions and agreements, and prepare report.

1.10 PROJECT CONDITIONS

A. Field Measurements: Where products and systems are indicated to fit walls and other construction, verify dimensions by field measurements before fabrication.

1. Operable partition shall be installed to close across area with smooth floor surface, with variance less than or equal to 1/8 inch (3 mm).
2. Preparation of opening shall conform to the criteria set forth per ASTM E557 Standard Practice for Architectural Application and Installation of Operable Partitions. Plenum barrier construction shall provide an STC rating greater than or equal to that of scheduled Operable Partitions.

1.11 COORDINATION

A. Coordinate installation of products and systems with interfacing and adjoining construction to provide a successful installation without failure.

1.12 WARRANTY

A. Manufacturer's Warranty: Manufacturer agrees to repair or replace components of operable panel partitions that fail in materials or workmanship within specified warranty period.

1. Failures include, but are not limited to, the following:

a. Faulty operation of operable panel partitions.
b. Deterioration of metals, metal finishes, and other materials beyond normal use.

2. Warranty Period: 2 years from date of Substantial Completion.

B. Manufacturer's Warranty: Furnish manufacturer's written material and labor warranty signed by an authorized representative using manufacturer's standard form agreeing to furnish materials and labor required to repair or replace work which exhibits material defects caused by manufacture or design and installation of product. "Defects" is defined to include but not limited to deterioration or failure to perform as required.

1. Failures include, but are not limited to, the following:

a. Structural failures including, but not limited to, excessive deflection.
b. Faulty operation of operable panel partitions
c. Deterioration of metals, metal finishes and other materials beyond normal wear.

2. Warranty Period: Manufacturer shall warrant the products to be free from material and labor Defects for the following period of years from date of issuance of The Certificate of Substantial Completion.

a. Panel Warranty Period:

1) Base Bid: 2 years.

2) Alternate Bid: 10 years.

b. Trolley and Mechanically Operated Retractable Seals: 10 years.
c. Track, Brackets, Switches and Curves: 10 years.
d. Fixed Horizontal Top Seals: Lifetime of installation

C. Installer's Warranty: Furnish installer's written workmanship warranty signed by an authorized representative using installer's standard form agreeing to provide labor required to repair or replace work which exhibits workmanship defects. "Defects" is defined to include but not limited to deterioration or failure to perform as required.

1. Warranty Period: Installer shall warrant the installation to be free from workmanship Defects for a period of 2 years from date of issuance of The Certificate of Substantial Completion.

PART 2 - PRODUCTS

2.1 MANUFACTURERS AND PRODUCTS

A. Acceptable Manufacturers and Products: Subject to compliance with requirements of Contract Documents as judged by the Architect, provide product by one of manufacturers listed. If not listed, submit as substitution according to the Conditions of the Contract and Division 01 Section "Substitution Procedures".

B. Available Manufacturers and Products: Subject to compliance with requirements of Contract Documents as judged by the Architect, manufacturers offering products that may be incorporated into the Work include, but are not limited to, those listed.

1. Manufacturers and Products - Ballrooms:

a. Advanced Equipment Corporation; Alpha Series, Type U.
b. Hufcor Inc.; 641 Series, Track 11.
c. Modernfold Inc.; Encore Series, Track 14.

2. Manufacturers and Products - Meeting Rooms:

a. Advanced Equipment Corporation; Alpha Series, Type T.
b. Hufcor Inc.; 631 Series, Track 11.
c. Modernfold Inc.; Encore Series, Track 14.

C. Basis of Design (Product Standard): Contract Documents are based on products and systems specified to establish a standard of quality. Other manufacturers offering products having equivalent characteristics may be considered, provided deviations are minor and comply with requirements of Contract Documents as judged by the Architect.

1. Manufacturer and Product: Modernfold, Inc.; Encore Series

2.2 MATERIALS, GENERAL

A. Single Source Responsibility: Furnish each type of product from single manufacturer. Provide secondary materials only as recommended by manufacturer of primary materials.

2.3 PERFORMANCE REQUIREMENTS

A. General Performance: Engineer products and systems to withstand loads within limits of allowable working stresses of the materials involved under conditions indicated and without permanent deformation or failure of materials.

B. Design Loads: Engineer to withstand design loads including but not limited to gravity, wind, seismic, and erection design loads and thermal movements established by authorities having jurisdiction, applicable local building codes, and as indicated.

1. Structural Movement: Engineer to withstand movements of structure including, but not limited to, drift, twist, column shortening, long-term creep and deflection from uniformly distributed and concentrated live loads. Contractor shall obtain required design data and identify movements accommodated on submittal drawings.

    a. Review partition loading with Architect to verify that allowable deflection of supporting structure will not restrict partition operation nor affect partition acoustics

2. Deflection of Supporting Structure: Operable panel wall system shall be capable of withstanding building movements within the following limitations:

    a. Total Deflection - Ballrooms: Not to exceed 1.5 inch (38 mm).
    b. Total Deflection - Meeting Rooms: Not to exceed 0.75 inch (19 mm).
    c. Total Deflection: Not to exceed 0.75 inch (19 mm).

C. Acoustical Characteristics:

1. Noise Isolation Class (NIC): Manufacturer shall submit results of Noise Isolation Class (NIC) tests conducted by an independent testing agency of the same type wall systems, and of similar height and width, in accordance with ASTM E336-90.

    a. Single Partitions: Refer to schedule at end of this section.

2. Sound Transmission Class (STC): Manufacturer shall submit Laboratory test data performed in accordance with ASTM E90 and E413.

    a. Single Partitions: Refer to schedule at end of this section.
    b. STC: Not less than 52.

D. Dimensional Tolerances: Engineer products and systems to accommodate dimensional tolerances of framing members and adjacent construction.

2.4 MATERIALS

A. Steel Frame: Steel sheet, not less than 0.0598 inch (1.5 mm), 16 gage nominal specified thickness for uncoated steel.

B. Aluminum Trim: Alloy and temper recommended by aluminum producer and finisher for type of use, corrosion resistance, and finish indicated; ASTM B 221 for extrusions; manufacturer's standard strengths and thicknesses for type of use.

C. Steel Face/Liner Sheets: Tension-leveled steel sheet, not less than nominal specified thickness for uncoated steel.

2.5 OPERABLE PANEL PARTITIONS

A. Panel Construction: Provide top reinforcement as required to support panel from suspension components and provide reinforcement for hardware attachment. Fabricate panels with tight hairline joints and concealed fasteners. Fabricate panels so finished in-place partition is rigid; level; plumb; aligned, with tight joints and uniform appearance; and free of bow, warp, twist, deformation, and surface and finish irregularities.

1. Panel Faces: Tension-leveled steel sheet, minimum 16 gage nominal thickness or 18 gage nominal thickness; with laminated gypsum backer panel.

B. Dimensions: Fabricate operable panel partitions, from manufacturer's standard sizes, to form an assembled system of dimensions indicated on Drawings and verified by field measurements.

C. Cap-Trimmed Edges: If applicable, protective aluminum top and bottom edge trim with tight hairline joints concealing edges of panel and finish facing. One of the following as selected by Architect:

1. Anodized Finish: Manufacturer's standard clear anodized.
2. Powder Coat Finish: Manufacturer's standard baked polymer thermosetting powder finish.

D. Vertical Trimless Edges: Fabricate vertical exposed panel edges so finish facing wraps uninterrupted around panel, covering edge and resulting in an installed partition with facing visible on vertical panel edges, without trim, for minimal sightlines at panel-to-panel joints.

E. Operable Panel Partition Characteristics:

1. Each partition shall consist of panels of steel frame construction with internal glass fiber fill and sound barrier septum, as required, to achieve the specified design criteria. Panel construction shall be fabricated from formed steel with overlapped and welded corners for rigidity. Top channel shall be reinforced to support suspension system components.
2. Individual panels shall have roll-formed steel wrapping around panel edge. Panel skins shall be lock formed and welded directly to the frame for unitized construction.

F. Hardware: Manufacturer's standard as required to operate operable panel partition and accessories; with decorative, protective finish.

G. Panel Thickness: As scheduled at the end of this section.

2.6 SEALS

A. General: Provide types of acoustical seals that produce operable panel partitions complying with acoustical performance requirements and the following:

1. Seals made from materials and profiles that minimize sound leakage.
2. Seals fitting tight at contact surfaces and sealing continuously between adjacent panels and between operable panel partition perimeter and adjacent surfaces, when operable panel partition is extended, closed, and in place.

B. Vertical Seals: Deep-nesting, interlocking astragals mounted on each edge of panel, with continuous PVC acoustical seal.

C. Horizontal Top Seals: Continuous contact extruded vinyl bulb shaped sweeps with pairs of non-contacting vinyl fingers or PVC-faced, mechanical, constant-force-contact seal exerting uniform constant pressure on track when extended, ensuring horizontal and vertical sealing and resisting panel movement.

D. Horizontal Bottom Seals: PVC-faced, mechanical, retractable, constant-force-contact seal exerting uniform constant pressure on floor when extended, ensuring horizontal and vertical sealing and resisting panel movement.

1. Mechanically Operated: Extension and retraction of bottom seal by operating handle or built-in operating mechanism, with operating range and required operating clearance between retracted seal and floor finish. Partition manufacturer shall confirm deflection requirements to confirm bottom seal operating clearance and requirements.

a. Horizontal Bottom Drop Seals: As scheduled at the end of this section.

2.7 FINISH FACING

A. General: Install finish facings that comply with indicated fire-test-response characteristics and that are factory applied to operable panel partitions with appropriate backing, using mildew-resistant nonstaining adhesive as recommended by facing manufacturer's written instructions.

1. Apply one-piece, seamless facings free of air bubbles, wrinkles, blisters, and other defects, with edges tightly butted, and with invisible seams complying with Shop Drawings for location, and with no gaps or overlaps. Horizontal butted edges and seams are not permitted. Tightly secure and conceal raw and selvage edges of facing for finished appearance.
2. Where facings with directional or repeating patterns or directional weave are indicated, mark facing top and attach facing in same direction.
3. Match facing pattern 72 inches (1800 mm) above finished floor.

B. Vinyl-Coated Fabric Wall Covering: Manufacturer's standard, mildew-resistant, washable, vinyl-coated fabric wall covering; complying with CFFA-W-101-D for type indicated; Class A.

1. Antimicrobial Treatment: Additives capable of inhibiting growth of bacteria, fungi, and yeasts.

2.8 SUSPENSION SYSTEMS

A. Suspension Tracks: Steel tracks with steel running surfaces and adjustable steel hanger rods for overhead support, designed for type of operation, size, and weight of operable panel partition indicated. Size track to support partition operation and storage without damage to suspension system, operable panel partitions, or adjacent construction. Limit track deflection to no more than 0.10 inch (2.5 mm) between bracket supports. Provide a continuous system of track sections and accessories to accommodate configuration and layout indicated for partition operation and storage.

1. Panel Guide: Aluminum; finished with factory-applied, decorative, protective finish.
2. Head Closure Trim: As required for acoustical performance; with factory-applied, decorative, protective finish selected by Architect from manufacturer's full range.

B. Carriers: Trolley system as required for configuration type, size, and weight of partition and for easy operation; with precision ground, sealed, ball-bearing, steel-tired wheels. Trolley shall be pre-programmed at the factory to allow automatic indexing of panels into pocket areas.

C. Track Intersections, Switches, and Accessories: As required for type of operation, storage, track configuration, and layout indicated for operable panel partition and compatible with partition assembly specified. Fabricate track intersections and switches from steel with steel running surfaces. Track design will incorporate smooth switches and curves to accommodate pre-programmed automatic indexing trolleys.

D. Aluminum Finish: Clear anodized, factory-applied, decorative finish, unless otherwise indicated.

E. Steel Finish: Factory-applied, corrosion-resistant, protective coating, unless otherwise indicated.

2.9 ELECTRIC OPERATORS

A. General: Factory-assembled electric operation system of size and capacity recommended and provided by operable panel partition manufacturer for partition specified; with electric motor and factory-prewired motor controls, speed reducer, chain drive, control stations, control devices, and accessories required for operation. Include wiring from control stations to motor. Coordinate operator wiring requirements and electrical characteristics with building electrical system.

B. Comply with NFPA 70.

C. Control Equipment: Comply with NEMA ICS 1, NEMA ICS 2, and NEMA ICS 6.

D. Motor Electrical Characteristics: Sufficient to start, accelerate, and operate connected loads at designated speeds, within installed environment, with indicated operating sequence, and without exceeding nameplate rating or considering service factor. Comply with NEMA MG 1.

E. Control Stations: Two single-key-operated, constant-pressure control stations located remotely from each other on opposite sides and opposite ends of partition run. Wire in series to require simultaneous activation of both key stations to operate partition. Each three-position control station labeled "Open," "Close," and "Off." Furnish two keys per station.

F. Obstruction-Detection Devices: Equip each motorized operable panel partition with indicated automatic safety sensor that causes operator to immediately stop and reverse direction.

1. Sensor Edge: Contact-pressure-sensitive safety edge along partition's leading edge.
2. Sensor Mat: Electrically operated, contact-weight-sensitive safety mat in storage pocket area.

G. Limit Switches: Adjustable switches, interlocked with motor controls and set to automatically stop operable panel partition at fully extended and fully stacked positions.

H. Emergency Release Mechanism: Quick disconnect-release of electric-motor drive system, permitting manual operation in event of operating failure.

I. Electric Interlock: Equip each motorized operable panel partition with electric interlocks at locations indicated, to prevent operation of operable panel partition under the following conditions:

1. On storage pocket door, to prevent operation if door is not in fully open position.
2. On partitions at location of convergence by another partition, to prevent operation if merging partitions are in place.

2.10 ACCESSORIES

A. Storage Pocket Door: Full height at end of partition runs to conceal stacked partition; of same materials, finish, construction, thickness, and acoustical qualities as panels; complete with operating hardware. Hinges in finish to match other exposed hardware. Provide pocket door configuration that allows partition seal to back of pocket.

1. Rim Lock: Deadlock to receive cylinder, to secure storage pocket door in closed position. See Division 08 section "Door Hardware" for lock cylinder and keying requirements.

B. Pass Door; Single Leaf:

1. Pass Door: Matching pass door same thickness and appearance as partition panels. ADA compliant pass door shall be trimless and equipped with lever latch and push bar for panic operation. Threshold will not be permitted.
2. Closers: Concealed automatic door closures with full 180 degree opening range and hold open capability.
3. Exit Signs: Self illuminated chemical exit signs.
4. Panic Hardware: Recessed lever latch and recessed push bar. Surface mount push bar is not permitted. Push/pull knob or drop ring latch is not permitted.
5. Hinges: SOSS invisible hinges. Barrel or piano hinges are not permitted.
6. Trimless: Perimeter trim around door is not permitted. Splice in panel face at top of door is not permitted.
7. Viewer: Recessed door viewer.
8. Deadbolt Lock: Prepare door for lock cylinder.
9. Seals: Operable seals in door and adjacent panel legs, operable from edge of panel and door. Face operated seals on door or panel leg are not permitted.

PART 3 - EXECUTION

3.1 EXAMINATION

A. Acceptance of Surfaces and Conditions: Examine substrates to receive products and systems and associated work for compliance with requirements and other conditions affecting performance. Proceed only when unsatisfactory conditions have been corrected in a manner complying with Contract Documents. Starting work within a particular area will be construed as acceptance of surface conditions.

B. Examine flooring, structural support, and opening, with Installer present, for compliance with requirements for installation tolerances and other conditions affecting performance of operable panel partitions.

1. The operable wall sub-contractor shall take responsibility for the ceiling/floor void barriers, interfaces with walls, etc and other associated constructions which may form possible significant noise flanking paths (if deemed necessary by the sub-contractor). These constructions shall be designed and installed such that the overall site sound separation performance requirements are met. The sub-contractor shall include the associated works within the sub-contract and/or approve the design and site installation of the associated constructions, prior to site level difference testing, sufficient for the sub-contractor to guarantee overall performance without doubt as to contractual responsibilities.

3.2 INSTALLATION, GENERAL

A. Installation Quality Standards: In addition to standards listed elsewhere, perform Work according to following, unless otherwise specified:

1. Comply with ASTM E 557.
2. Respective manufacturer's written installation instructions.
3. Accepted submittals.
4. Contract Documents.

3.3 PREPARATION

A. General: Comply with manufacturer's instructions, recommendations, and specifications for cleaning and surface preparation. Surfaces shall have no defects, contaminants, or errors which would result in poor or potentially defective installation or would cause latent defects in Work.

3.4 INSTALLATION OF OPERABLE PANEL PARTITIONS

A. Install operable panel partitions and accessories after other finishing operations, including painting, have been completed. Broken, cracked, chipped, deformed, or unmatched panels are not acceptable.

B. Installation personnel, experienced in the erection of the particular operable wall system furnished, shall be closely supervised by technician employed directly by the partition manufacturer.

3.5 FIELD QUALITY CONTROL

A. Manufacturer's Field Service: Manufacturer's qualified technical representative shall periodically inspect Work to ensure installation is proceeding in accordance with manufacturer's designs, recommendations, instructions and warranty requirements. Representative shall submit written reports of each visit indicating observations, findings, and conclusions of inspection.

1. Manufacturer's Technical Representative Qualifications: Direct employee of technical services department of manufacturer with experience in providing recommendations, observations, evaluations, and problem diagnostics.

B. Testing Laboratory Field Service: Contractor shall engage and pay an approved qualified independent testing laboratory to perform field quality control. Materials and installation failing to meet specified requirements shall be replaced at Contractor's expense. Retesting of materials and installations failing to meet specified requirements shall be done at Contractor's expense.

1. Upon completion of this portion of the work, and prior to its acceptance by the Owner, the partition shall be set up by the manufacturer and field sound tested. Test price shall be included in the bid price. Prior to testing the operable partitions, the Architect and the partition manufacturer's representative will examine flanking paths through the surrounding building construction to determine that they will not significantly affect the performance of the operable partitions. The manufacturer shall complete the test with the Owner's Representative in attendance and shall make partition adjustments as required.
2. Light Leakage Testing: Illuminate one side of partition installation and observe vertical joints and top / bottom seals; adjust partitions to eliminate voids.
3. Noise Isolation Class (NIC) Testing: Perform testing of installed operable panel partitions for noise isolation according to ASTM E 336, determined by ASTM E413, and rated for not less than NIC indicated. Adjust partitions to comply with requirements.
4. Extent of Testing: Testing agency shall randomly select partition installation for testing.
5. Repair or replace partitions where test results indicate partitions do not comply with requirements; retest partitions.
6. Additional testing and inspections, at Contractor's expense, shall be performed to determine compliance with requirements.

3.6 ADJUSTING

A. Adjust operable panel partitions and pocket doors to operate smoothly, easily, and quietly, free from binding, warp, excessive deflection, distortion, nonalignment, misplacement, disruption, or malfunction, throughout entire operational range. Lubricate hardware and other moving parts.

B. Electric Operator: Adjust operable panel partitions, hardware, electric operator, and other moving parts to function smoothly, and lubricate as recommended by manufacturer.

C. Storage Pocket Doors: Adjust storage pocket doors to operate smoothly and easily, without binding or warping.

D. Pass Doors: Adjust pass doors to operate smoothly and easily, without binding or warping.

3.7 CLEANING AND PROTECTION

A. Clean soiled surfaces on completing installation of operable panel partitions, to remove dust, adhesives, and other foreign materials according to manufacturer's written instructions.

B. Provide final protection and maintain conditions, in a manner acceptable to manufacturer and installer that ensure operable panel partitions are without damage or deterioration at time of Substantial Completion.

C. Replace panels that cannot be cleaned and repaired, in a manner accepted by Architect, before time of Substantial Completion.

3.8 DEMONSTRATION

A. Engage a factory-authorized service representative to train Owner's maintenance personnel to adjust, operate, and maintain operable panel partitions.

1. Test and adjust seals, hardware, carriers, tracks, and other operable components. Replace damaged or malfunctioning operable components.
2. Train Owner's maintenance personnel on procedures and schedules for starting and stopping, troubleshooting, servicing, and maintaining equipment and schedules.
3. Review data in maintenance manuals. Refer to Division 01 Section "Closeout Procedures".

A. **OPERABLE PANEL PARTITION SCHEDULE:** See Interior Finish Legend on drawings.

END OF SECTION

SECTION 10 2613

WALL AND CORNER GUARDS

PART 1 - GENERAL

1.1 SUMMARY

A. Scope: Impact-resistant wall protection systems, wall and corner guards, and supplementary items necessary for installation.

B. Related Section:

1. Division 06 Section "Plastic (FRP) Panels" for non-impact resistant, glass-fiber reinforced (FRP) plastic panels.

1.2 ACTION SUBMITTALS

A. Product Data: Manufacturer's technical literature for each product and system indicated.

1. Include manufacturer's specifications for materials, finishes, physical characteristics such as durability, resistance to fading, and flame resistance, construction details, installation instructions, and recommendations for maintenance

B. Shop Drawings: Show details of fabrication and installation, including plans, elevations, sections, details of components and attachments to other work. Distinguish between shop and field-assembled work

1.3 INFORMATIONAL SUBMITTALS

A. Qualification Data:

1. For firms and persons specified in "Quality Assurance" to demonstrate their capabilities and experience. Include list of completed projects.

1.4 CLOSEOUT SUBMITTALS

A. Maintenance Data: Include for each wall protection system component to include in maintenance manuals specified in Division 1. Include recommended methods and frequency for maintaining optimum condition of plastic covers under anticipated traffic and use conditions, and precautions against using cleaning materials and methods that may be detrimental to plastic finishes and performance.

1.5 MAINTENANCE MATERIAL SUBMITTALS

A. Extra Materials: Furnish as described below packaged with protective covering and identified with labels describing contents.

1. Full-size units of maximum length, including plastic cover and aluminum retainer, equal to 2 percent of each type, color, and texture of each type of unit installed, but not less than 2 units.

2. Accessory components from same production run as materials installed.

1.6 QUALITY ASSURANCE

A. Fire-Test-Response Characteristics: Provide wall protection system components with surface-burning characteristics indicated, as determined by testing identical materials according to ASTM E 84 by a testing and inspecting agency acceptable to authorities having jurisdiction. Identify wall protection system components with appropriate markings of applicable testing and inspecting agency.

B. Regulatory Requirements: Comply with applicable provisions in the U.S. Architectural & Transportation Barriers Compliance Board's ADA-ABA Accessibility Guidelines.

1.7 PRE-INSTALLATION CONFERENCE

A. Pre-Installation Conference: Before Work begins, conduct conference at Project site.

1. Participants:

   a. Architect.
   b. Contractor, including superintendent.
   c. Installer, including project manager and supervisor.
   d. If requested, Manufacturer's qualified technical representative.
   e. Installers of other construction interfaced with Work.

2. Minimum Agenda: Installer shall demonstrate understanding of the Work required by describing detailed procedures for preparing, installing, and cleaning the Work. Demonstration shall include, but not be limited to, following topics:

   a. Tour representative areas of Work, inspect and discuss condition of substrate, and other preparatory work performed by other trades.
   b. Review Contract Document requirements.
   c. Review approved submittals.
   d. Review inspection and testing requirements.
   e. Review environmental conditions and procedures for coping with unfavorable conditions.
   f. Resolve deviations or differences between Contract Documents and the manufacturer's specifications.

3. Record discussions, including decisions and agreements, and prepare report.

1.8 PROJECT CONDITIONS

A. Environmental Limitations: Do not deliver or install impact-resistant wall protection units until building is enclosed and weatherproof, wet work is complete and dry, and HVAC system is operating and maintaining temperature at 70 deg F (21 deg C) for not less than 72 hours before beginning installation and for the remainder of the construction period.

1.9 COORDINATION

A. Coordinate installation of products and systems with interfacing and adjoining construction to provide a successful installation without failure.

PART 2 - PRODUCTS

2.1 MANUFACTURERS

A. Acceptable Manufacturers: Subject to compliance with requirements of Contract Documents as judged by the Architect, provide product by one of manufacturers listed. If not listed, submit as substitution according to the Conditions of the Contract and Division 01 Section "Substitution Procedures".

1. Alpar Architectural Products.
2. American Floor Products Co., Inc.
3. Arden Architectural Specialties, Inc.
4. Construction Specialties, Inc. (C/S Group)
5. IPC Door and Wall Protection Systems; Division of InPro Corporation.
6. Korogard Wall Protection Systems; a division of RJF International Corporation.
7. Pawling Corporation.
8. Tepromark International, Inc.

B. Basis of Design (Product Standard): Contract Documents are based on products and systems specified to establish a standard of quality. Other manufacturers/fabricators offering products having equivalent characteristics may be considered, provided deviations are minor and comply with requirements of Contract Documents as judged by the Architect.

2.2 MATERIALS, GENERAL

A. Single Source Responsibility: Furnish each type of product from single manufacturer. Provide secondary materials only as recommended by manufacturer of primary materials.

2.3 MATERIALS

A. PVC Plastic: ASTM D 1784, Class 1, textured, chemical- and stain-resistant, high-impact-resistant PVC or acrylic-modified vinyl plastic with integral color throughout; extruded and sheet material, thickness as indicated.

B. Engineered PETG (Polyethylene Terepthalate Glycol) Material: Textured, chemical- and stain-resistant, high-impact-resistant co-polymer plastic with integral color throughout; PVC-free with no PBTs or BPA, extruded and sheet material, thickness as indicated.

1. Impact Resistance: Minimum 25.4 ft-lbf/in. (1356 J/m) of notch when tested according to ASTM D 256, Test Method A.
2. Chemical and Stain Resistance: Tested according to ASTM D 543 or ASTM D 1308.
3. Self-extinguishing when tested according to ASTM D 635.
4. Flame-Spread Index: 25 or less.
5. Smoke-Developed Index: 450 or less.
6. Color and Texture: As scheduled or as indicated in Design Selections.

C. Polycarbonate Plastic Sheet: ASTM D 6098, S-PC01, Class 1 or 2, abrasion resistant; with a minimum impact-resistance rating of 15 ft-lbf/in. (800 J/m) of notch when tested according to ASTM D 256, Test Method A.

D. Aluminum Extrusions: Alloy and temper recommended by manufacturer for type of use and finish indicated, but with not less than strength and durability properties specified in ASTM B 221 (ASTM B 221M) for Alloy 6063-T5.

E. Brass: ASTM B 249/B 249M for extruded shapes and ASTM B 36/B 36 M for sheet.

F. Solid Wood: Clear hardwood lumber of species indicated, free of appearance defects, and selected for compatible grain and color.

G. Fasteners: Aluminum, nonmagnetic stainless-steel, or other noncorrosive metal screws, bolts, and other fasteners compatible with items being fastened. Use security-type fasteners where exposed to view.

H. Adhesive: As recommended by impact-resistant plastic wall protection manufacturer and with a VOC content of 70 g/L or less when calculated according to 40 CFR 59, Subpart D (EPA Method 24).

2.4 WALL AND CORNER GUARDS

A. Basis of Design (Product Standard): Contract Documents are based on products and systems specified to establish a standard of quality. Other manufacturers/fabricators offering products having equivalent characteristics may be considered, provided deviations are minor and comply with requirements of Contract Documents as judged by the Architect.

1. Manufacturers and Products: As scheduled or as indicated in Interior Finish Schedule.

B. Drawing Designation BG - Surface-Mounted Bumper Rail Type Wall Guards:

1. Description:

a. Cover: Snap-on type, extruded plastic; nominal 0.078 in (1.98 mm) thick; continuous in profile indicated.
b. Mounting Retainer: Continuous extruded aluminum retainer; nominal 0.072 in (1.83 mm) thick; with resilient cushion material between retainer and wall.
c. Accessories: Prefabricated, injection-molded matching end caps, inside and outside corners with concealed splices, mounting hardware and other accessories as required.

2. Product Standard:

a. Drawing Designation BG: Refer to Interior Finish Legend.

2.5 PLASTIC / ALUMINUM RETAINER TYPE CORNER GUARDS

A. Drawing Designations CG-1, Surface-Mounted Non-Fire Rated Corner Guards:

1. Description:

a. Cover: Snap-on type, extruded plastic; nominal 0.078 in (1.98 mm) thick; continuous in profile indicated with 1/4 inch corner radius.
b. Retainer: Continuous extruded aluminum retainer; nominal 0.070 in (1.78 mm) thick.
c. Accessories: Prefabricated, injection-molded matching top cap with concealed splices, mounting hardware and other accessories as required.

2. Product Standards:

a. Drawing Designations CG-1: Refer to Interior Finish Legend.

B. Drawing Designations EG - Surface-Mounted Non-Fire Rated End-of-Wall Corner Guards With Wall Protection Inset:

1. Description:

a. Cover: Snap-on type, extruded plastic; nominal 0.078 in (1.98 mm) thick; continuous in profile indicated with 1/4 inch corner radius.
b. Retainer: Continuous extruded aluminum retainer; nominal 0.070 in (1.78 mm) thick.
c. Accessories: Prefabricated, injection-molded matching top cap with concealed splices, mounting hardware and other accessories as required.
d. Inset: Surface–mounted plastic wall protection (WP) as indicated below.

2.6 STAINLESS STEEL TYPE CORNER GUARDS

A. Drawing Designation CG-02 - Surface-Mounted Stainless Steel Corner Guards:

1. Description: Fabricated from 16 gage, type 304 stainless steel; 3-1/2 in x 3-1/2 in (87 by 87 mm) wings; with formed edges and 90 degree corner; with No. 4 directional, satin finish, with strippable plastic temporary protection.
2. Mounting Method: Stainless steel flat-head screws.
3. Product Standard:

a. Drawing Designation CG-02 : Refer to Interior Finish Legend.

2.7 PLASTIC WALL PROTECTION

A. Drawing Designation WPC - Surface-Mounted Plastic Wall Protection:

1. Description: Fabricated from nominal 0.060 in (1.52 mm) thick extruded plastic sheets; with match wainscot and joint moldings and outside and inside corner trims as required.
2. Mounting Method: Adhesive.
3. Product Standard: Refer to Interior Finish Legend.

B. Glass-Fiber Reinforced Plastic (FRP) Wall Protection: Refer to Division 06 Section "Plastic (FRP) Paneling".

2.8 FABRICATION

A. General Requirements: Fabricate wall protection system components to comply with requirements indicated for design, dimensions, details, finish, and member sizes, including thicknesses of components.

1. Preassemble components in shop to greatest extent possible to minimize field assembly.
2. Fabricate components with tight seams and joints with exposed edges rolled. Provide surfaces free of wrinkles, chips, dents, uneven coloration, and other imperfections. Fabricate members and fittings to produce flush, smooth, and rigid hairline joints.

PART 3 - EXECUTION

3.1 EXAMINATION

A. Acceptance of Surfaces and Conditions: Examine substrates to receive products and systems and associated work for compliance with requirements and other conditions affecting performance. Proceed only when unsatisfactory conditions have been corrected in a manner complying with Contract Documents. Starting work within a particular area will be construed as acceptance of surface conditions.

3.2 INSTALLATION, GENERAL

A. Installation Quality Standards: In addition to standards listed elsewhere, perform Work according to following, unless otherwise specified:

1. Respective manufacturer/fabricator's written installation instructions.
2. Accepted submittals.
3. Contract Documents.

3.3 PREPARATION

A. General: Comply with manufacturer's instructions, recommendations, and specifications for cleaning and surface preparation. Surfaces shall have no defects, contaminants, or errors which would result in poor or potentially defective installation or would cause latent defects in Work.

3.4 EXAMINATION

A. Acceptance of Conditions: Examine substrate surfaces to which wall protection system components will be installed for compliance with requirements, installation tolerances and other conditions affecting performance. Proceed only when unsatisfactory conditions have been corrected in a manner complying with Contract Documents. Starting work within a particular area will be construed as acceptance.

3.5 INSTALLATION

A. General: Install impact-resistant wall protection units level, plumb, and true to line without distortions. Do not use materials with chips, cracks, voids, stains, or other defects that might be visible in the finished Work.

1. Install impact-resistant wall protection units in locations and at mounting heights indicated on Drawings.
2. Provide splices, mounting hardware, anchors, and other accessories required for a complete installation.

    a. Provide anchoring devices to withstand imposed loads.
    b. Where splices occur in horizontal runs of more than 20 ft (6.1 m), splice aluminum retainers and plastic covers at different locations along the run, but no closer than 12 in (300 mm).
    c. Adjust end and top caps as required to ensure tight seams.

B. Impact-Resistant Wall Covering: Install top and edge moldings, corners, and divider bars as required for a complete installation.

3.6 CLEANING

A. Immediately after completion of installation, clean plastic covers and accessories using a standard, ammonia-based, household cleaning agent.

B. Remove excess adhesive using methods and materials recommended in writing by manufacturer.

3.7 FINISH SCHEDULE

A. Color and Texture: As selected by Architect from full range of industry colors.

END OF SECTION

SECTION 10 2813

TOILET ACCESSORIES

PART 1 - GENERAL

1.1 SUMMARY

A. Section Includes: Toilet accessories and supplementary items necessary for installation.

1.2 ACTION SUBMITTALS

A. Product Data: Manufacturer's technical literature for each product indicated.

1. Include manufacturer's specifications for materials, finishes, construction details, installation instructions, dimensions, and profiles of individual components.
2. Include details for cutouts required in other Work; include templates, substrate preparation instructions, and directions for preparing cutouts and installing anchoring devices.

1.3 INFORMATIONAL SUBMITTALS

A. Qualification Data:

1. For firms and persons specified in "Quality Assurance" to demonstrate their capabilities and experience. Include list of completed projects.

B. Warranty: Sample of special warranty.

1. Provide manufacturer's written warranty covering materials and installation (labor) stating obligations, remedies, limitations and exclusions.

1.4 CLOSEOUT SUBMITTALS

A. Maintenance Data: For inclusion in operation and maintenance manual as required by Division 01 Section "Operation and Maintenance Data". Include manufacturer's instructions for maintenance of installed Work, including methods and frequency for maintaining optimum condition under anticipated use. Include precautions against cleaning products and methods which may be detrimental to finishes and performance.

1.5 PRE-INSTALLATION CONFERENCE

A. Pre-Installation Conference: Before Work begins, conduct conference at Project site.

1. Participants:

a. Architect.
b. Contractor, including superintendent.
c. Installer, including project manager and supervisor.
d. If requested, Manufacturer's qualified technical representative.
e. Installers of other construction interfaced with Work.

2. Minimum Agenda: Installer shall demonstrate understanding of the Work required by describing detailed procedures for preparing, installing, and cleaning the Work. Demonstration shall include, but not be limited to, following topics:

    a. Tour representative areas of Work, inspect and discuss condition of substrate, and other preparatory work performed by other trades.
    b. Review Contract Document requirements.
    c. Review approved submittals.
    d. Review inspection and testing requirements.
    e. Review environmental conditions and procedures for coping with unfavorable conditions.
    f. Resolve deviations or differences between Contract Documents and the manufacturer's specifications.

3. Record discussions, including decisions and agreements, and prepare report.

1.6 COORDINATION

A. Coordinate installation of products with interfacing and adjoining construction to provide a successful installation without failure.

1.7 WARRANTY

A. Mirror Manufacturer's Warranty: Furnish warranty for a period of 15 years from date of Substantial Completion agreeing to replace mirrors that develop visible silver spoilage defects, signed by an authorized representative using manufacturer's standard form.

B. Hand Dryer Manufacturer's Warranty: Furnish warranty for a period of 10 years from date of Substantial Completion agreeing to repair or replace defective or faulty dryers, signed by an authorized representative using manufacturer's standard form.

PART 2 - PRODUCTS

2.1 MANUFACTURERS AND PRODUCTS

A. Acceptable Manufacturers and Products: Subject to compliance with requirements of Contract Documents as judged by the Architect, provide product by one of manufacturers listed. If not listed, submit as substitution according to Conditions of the Contract and Division 01 Section "Substitution Procedures".

1. A & J Washroom Accessories, Inc.
2. American Specialties, Inc.
3. Bobrick Washroom Equipment, Inc.
4. Bradley Corp.
5. Brey Krause Manufacturing.
6. GAMCO, a Division of Bobrick.

B. Shower Curtain Products Only:

1. Barjan Manufacturing Ltd.
2. Brite Inc.
3. Gary Manufacturing.

C. Basis of Design: Contract Documents are based on products specified to establish a standard of quality. Other manufacturers with products having equivalent characteristics may be considered, provided deviations are minor and do not change intended aesthetic, functional and performance requirements as judged by Architect.

2.2 MATERIALS, GENERAL

A. Single Source Responsibility: Furnish each type of product from single manufacturer. Provide secondary materials only as recommended by manufacturer of primary materials.

B. General Requirements:

1. Unless otherwise indicated, fabricate units of all-welded construction, with corners and returns as indicated, tight seams and joints, and exposed edges rolled.
2. Fabricate frames drawn and leveled, one-piece seamless construction.
3. Hang doors and access panels with full-length, stainless-steel hinges.
4. Equip units for concealed anchorage and with corrosion-resistant backing plates.

C. Manufacturer Names or Labels: Not permitted on exposed faces of accessories. Provide printed label or stamped metal nameplate indicating manufacturer's name and product model number on an easily noticeable interior surface or on back surface of each accessory.

D. Keys: Provide minimum of 6 universal keys for internal access to accessories for servicing and resupplying.

E. Accessibility Requirements: Products and installation shall comply with Americans with Disabilities Act (ADA), ANSI A 117.1, and state and local accessibility standards.

2.3 MATERIALS

A. Stainless Steel: ASTM A 666, Type 304, with No. 4 satin finish; minimum 0.0312 in (0.8 mm) (22 gage) nominal thickness unless otherwise indicated.

B. Mirror Glass: ASTM C 1036, Type I, Class 1, Quality q2, nominal 1/4 in (6 mm) thick, with silvering, electroplated copper coating, and protective organic coating.

C. Chrome Plating: ASTM B 456, Service Condition Number SC 2 (moderate service).

D. ABS Plastic: Moldable acrylonitrile-butadiene-styrene resin formulation.

E. Galvanized Steel Mounting Devices: ASTM A 153, hot-dip galvanized after fabrication.

F. Fasteners: Screws, bolts, and other devices of same material as accessory unit, tamper and theft resistant when exposed, and of non-corrosive metal when concealed.

G. Sealant: Silicone mildew resistant sealant specified in Division 07 Section "Joint Sealants".

2.4 PAPER TOWEL DISPENSERS

A. Drawing Designation A1 - Surface-Mounted Paper Towel Dispenser:

1. Description: Fabricated of stainless steel; with hinged front equipped with full length stainless steel piano hinge and tumbler lock; pierced slots at sides as refill indicators; and sized to dispense not less than 400 C-fold or 525 multi-fold paper towels without special adapters.
2. Basis of Design: Bobrick Washroom Equipment, Inc. Model B-262.

B. Drawing Designation A2 – Surface Mounted Automatic Paper Towel (Roll) Dispenser:

1. Description: Surface mounted, automatic motion sensing mechanism with user-adjustable delay and paper towel length; battery powered. Sized to dispense 8-inch-(203-mm-) wide, 800-foot- (244-m-) long roll. Lockset: Tumbler type.
2. Basis of Design: Bobrick Washroom Equipment, Inc. Model B-72974.

C. Drawing Designation A3 - Recessed-Mounted Paper Towel Dispenser:

1. Description: Fabricated of stainless steel; with seamless exposed flange and hinged front equipped with full length stainless steel piano hinge, door-swing cable limiter, and tumbler lock; sized to dispense not less than 350 C-fold or 475 multi-fold paper towels without use of special adapters; for nominal 4 in (100 mm) wall depth.
2. Basis of Design: Bobrick Washroom Equipment, Inc. Model B-359.

2.5 TOILET TISSUE DISPENSERS

A. Drawing Designation B1 - Surface-Mounted Single-Roll Toilet Tissue Dispenser:

1. Description: Fabricated of heavy duty cast aluminum; sized to accommodate 5 in (125 mm) diameter core type tissue roll; molded ABS spindle, theft-resistant, with retractable pin and concealed locking mechanism.
2. Basis of Design: Bobrick Washroom Equipment, Inc. Model B-2730.

B. Drawing Designation B2 - Surface-Mounted Double-Roll Toilet Tissue Dispenser:

1. Description: Fabricated of heavy duty cast aluminum; sized to accommodate two separate 5 in (125 mm) diameter core type tissue rolls; molded ABS spindle, theft-resistant, with retractable pin and concealed locking mechanism.
2. Basis of Design: Bobrick Washroom Equipment, Inc. Model B-2740.

C. Drawing Designation B3 - Surface-Mounted Multi Roll Toilet Tissue Dispenser:

1. Description: Fabricated of stainless steel; with hinged front equipped with pivot hinge and tumbler lock; sized to store and dispense two 5 in (125 mm) diameter core type tissue rolls with reserve roll placed in service automatically when bottom roll is depleted; molded ABS spindle, theft-resistant, and held in dispenser when door is locked.
2. Basis of Design: Bobrick Washroom Equipment, Inc. Model B-2888.

D. Drawing Designation B4: SURFACE – PARTITION-MOUNTED
   1) Manufacturer: Bobrick Washroom Equipment, Inc.
   2) Model Number: B-386

D. Drawing Designation B5 - Recessed-Mounted Toilet Paper Holder (Psychiatric Use):

1. Description: Fabricated of stainless steel with seamless exposed flange; concealed mounting clamp studs for stud walls with spanner head exposed fasteners; chrome plated spindle with internal spring.
2. Basis of Design: Bobrick Washroom Equipment, Inc. Model B-6677.

E. Drawing Designation B6 - Recessed-Mounted Multi Roll Toilet Tissue Dispenser:

1. Description: Fabricated of stainless steel; with seamless exposed flange and hinged front equipped with pivot hinge and tumbler lock; sized to store and dispense two 5 in (125 mm) diameter core type tissue rolls with reserve roll placed in service automatically when bottom roll is depleted; molded ABS spindle, theft-resistant and held in dispenser when door is locked; for nominal 4 in (100 mm) wall depth.
2. Basis of Design: Bobrick Washroom Equipment, Inc. Model B-3888.

2.6 SANTARY NAPKIN DISPOSALS

A. Drawing Designation E1 - Surface-Mounted Sanitary Napkin Disposal Unit:

1. Description: Fabricated of stainless steel; with flush door equipped with continuous piano hinge and tumbler lock; self-closing disposal panel with spring-loaded full length stainless steel piano hinge and international symbol for sanitary napkin disposal; with removable 1.2 gal (4.6 L) capacity molded polyethylene receptacle.
2. Basis of Design: Bobrick Washroom Equipment, Inc. Model B-254.

B. Drawing Designation E2 - Recessed-Mounted Sanitary Napkin Disposal Unit:

1. Description: Fabricated of stainless steel; with seamless exposed flange; with flush door equipped with continuous piano hinge and tumbler lock; self-closing disposal panel with spring-loaded full length stainless steel piano hinge and international symbol for sanitary napkin disposal; with removable 1.2 gal (4.6 L) capacity molded polyethylene receptacle; for nominal 4 in (100 mm) wall depth.
2. Basis of Design: Bobrick Washroom Equipment, Inc. Model B-353.

C. Drawing Designation E3 - Partition-Mounted Dual-Access Sanitary Napkin Disposal Unit:

1. Description: Fabricated of stainless steel; with seamless adjustable exposed flange at both partition faces; self-closing disposal panel at both partition faces with spring-loaded full length stainless steel piano hinge and international symbol for sanitary napkin disposal; with removable 1.2 gal (4.6 L) capacity molded polyethylene receptacle.
2. Basis of Design: Bobrick Washroom Equipment, Inc. Model B-354.

2.7 GRAB BARS

A. Drawing Designation G1, G2, G3, G4, G5, G6 G8, G9, G10 - Straight Surface-Mounted Satin Finish Grab Bar with Slip-Resistant Gripping Surface:

1. Description: Fabricated of stainless steel tube; with minimum 0.050 in (1.25 mm) (18 gage) wall thickness and 1-1/2 in (38 mm) outside diameter, with 1-1/2 in (38 mm) clearance between wall surface and inside face of bar.

    a. Gripping Surfaces: Satin texture with peened gripping surfaces.
    b. Shapes: Either as indicated, or as required by condition requiring grab bar.
    c. Mounting: Concealed flanged steel plate welded to end of bar, as required by mounting condition, with snap-on cover; engineered to support minimum 300 lbs (136 kg).

Basis of Design:

a. TYPE 1: HORIZONTAL – 18 INCHES
    1) Manufacturer: Bobrick Washroom Equipment, Inc.
    2) Model Number: B-6806 x 18

b. TYPE 2: HORIZONTAL – 24 INCHES
    1) Manufacturer: Bobrick Washroom Equipment, Inc.
    2) Model Number: B-6806 x 24

c. TYPE 3: HORIZONTAL – 30 INCHES
    1) Manufacturer: Bobrick Washroom Equipment, Inc.
    2) Model Number: B-6806 x 30

d. TYPE 4: HORIZONTAL – 36 INCHES
    1) Manufacturer: Bobrick Washroom Equipment, Inc.
    2) Model Number: B-6806 x 36

e. TYPE 5: HORIZONTAL – 42 INCHES
    1) Manufacturer: Bobrick Washroom Equipment, Inc.
    2) Model Number: B-6806 x 42

f. TYPE 6: VERTICAL – 18 INCHES
    1) Manufacturer: Bobrick Washroom Equipment, Inc.
    2) Model Number: B-6806 x 18

g. TYPE 8: L-SHAPED, HORIZONTAL – 42”x54”
    1) Manufacturer: Bobrick Washroom Equipment, Inc.
    2) Model Number: B-6897

h. TYPE 9: L-SHAPED, HORIZONTAL – 16”x30”
    1) Manufacturer: A & J Washroom Accessories
    2) Model Number: UG30X-G3016

i. TYPE 10: U-SHAPED, HORIZONTAL – 24”x60”x24”
    1) Manufacturer: A & J Washroom Accessories
    2) Model Number: UG30X-V246024

2.8 SOAP DISPENSERS

A. Drawing Designation – ITEM J:
    1. Basis of Design:
        a. TYPE 1: SURFACE - MANUAL
            1) Manufacturer: Bobrick Washroom Equipment, Inc.
            2) Model Number: B-4112

b. TYPE 2: SURFACE - AUTOMATIC
   1) Manufacturer: Bobrick Washroom Equipment, Inc.
   2) Model Number: B-2012
c. TYPE 3: RECESSED - MANUAL
   1) Manufacturer: Bobrick Washroom Equipment, Inc.
   2) Model Number: B-4063
d. TYPE 5: COUNTER - MANUAL
   1) Manufacturer: Bobrick Washroom Equipment, Inc.
   2) Model Number: B-822
e. TYPE 6: COUNTER - AUTOMATIC
   1) Manufacturer: Bobrick Washroom Equipment, Inc.
   2) Model Number: B-826

2.9 SOAP DISHS

A. Drawing Designation – ITEM K
1. Basis of Design:
   a. TYPE 1 SURFACE
      1) Manufacturer: Bobrick Washroom Equipment, Inc.
      2) Model Number: B-6807
   b. TYPE 2: RECESSED
      1) Manufacturer: Bobrick Washroom Equipment, Inc.
      2) Model Number: B-4380
   c. TYPE 3: RECESSED - CERAMIC
      1) Refer to Division 09, Section “TILING”.

2.10 FOLDING SHOWER SEATS

A. Drawing Designation – ITEM L:

1. Basis of Design:
   a. TYPE 1: WALL-MOUNTED – PADDED
      1) Manufacturer: Bobrick Washroom Equipment, Inc.
      2) Model Number: B-517 (right hand); B-518 (left hand)
   b. TYPE 2: WALL-MOUNTED – COMPOSITE
      1) Manufacturer: Bobrick Washroom Equipment, Inc.
      2) Model Number: B-5181 (reversable)

2.11 CHANGING STATIONS

A. Drawing Designation – ITEM M:

1. Basis of Design:
   a. TYPE 1: SURFACE - HDPE
      1) Manufacturer: Koala Kare Products / Bobrick
      2) Model Number: KB200 (horizontal)
   b. TYPE 2: SURFACE – STAINLESS STEEL
      1) Manufacturer: Koala Kare Products / Bobrick
      2) Model Number: KB110-SSWM (horizontal)
   c. TYPE 3: RECESSED - HDPE
      1) Manufacturer: Koala Kare Products / Bobrick
      2) Model Number: KB100-ST (horizontal)
   d. TYPE 4: RECESSED – STAINLESS STEEL
      1) Manufacturer: Koala Kare Products / Bobrick
      2) Model Number: KB110-SSRE (horizontal)

2.17 MIRRORS

A. Drawing Designation – ITEM P:

1. Basis of Design:
   a. TYPE 1: STAINLESS STEEL FRAME
      1) Manufacturer: Bobrick Washroom Equipment, Inc.
      2) Model Number: B-295 x 18
   b. TYPE 2: STAINLESS STEEL FRAME WITH SHELF
      1) Manufacturer: Bobrick Washroom Equipment, Inc.
      2) Model Number: B-676 x 24
   c. TYPE 3: TILT STAINLESS STEEL FRAME
      1) Manufacturer: Bobrick Washroom Equipment, Inc.
      2) Model Number: B-287
   d. TYPE 4: SELF-ILLUMINATED
      1) Manufacturer: Electric Mirror
      2) Model Number: Novo Lighted Mirror
      3) Sizes:
         a) 24 inch x 36 inch

2.19 ROBE HOOKS

B. Drawing Designation – ITEM R:

1. Basis of Design:
   a. TYPE 1: SINGLE
      1) Manufacturer: Bobrick Washroom Equipment, Inc.
      2) Model Number: B-6717
   b. TYPE 2: DOUBLE
      1) Manufacturer: Bobrick Washroom Equipment, Inc.
      2) Model Number: B-76727

2.20 SANITIZER DISPENSERS

A. Drawing Designation – ITEM T:

1. Basis of Design:
   a. TYPE 1: SURFACE - MANUAL
      1) Manufacturer: Purell Hand Sanitizer
      2) Model Number: S-14836
   b. TYPE 2: SURFACE - AUTOMATIC
      1) Manufacturer: Purell Hand Sanitizer
      2) Model Number: H-1950

2.21 MOP AND BROOM HOLDERS

A. Drawing Designation – ITEM U:

1. Basis of Design:
   a. TYPE 1: WITH SHELF
      1) Manufacturer: Bobrick Washroom Equipment, Inc.
      2) Model Number: B-224 x 36
   b. TYPE 2: WITHOUT SHELF
      1) Manufacturer: Bobrick Washroom Equipment, Inc.
      2) Model Number: B-223 x 36

2.22 ROD, HOOKS, AND CURTAINS

A. Drawing Designation – ITEM V:

1. Basis of Design:
   a. TYPE 1: CURVED ROD
      1) Manufacturer: Bobrick Washroom Equipment, Inc.
      2) Model Numbers:
         a) Rod: B-4207 x 72 (72 inch); B-4207 x 60 (60 inch)
         b) Hooks: B-204-1
         c) Curtain: B-204-2 (42 inch); B-204-3 (70 inch)
   b. TYPE 2: STRAIGHT ROD
      1) Manufacturer: Bobrick Washroom Equipment, Inc.
      2) Model Numbers:
         a) Rod: B-207 x 72 (72 inch); B-207 x 60 (60 inch); B-207 x 48 (48 inch); B-207 x 36 (36 inch).
         b) Hooks: B-204-1
         c) Curtain: B-204-2 (42 inch); B-204-3 (70 inch)

2.25 GLOVE DISPENSERS

A. Drawing Designation – ITEM X:

1. Basis of Design:
   a. TYPE1: STAINLESS STEEL - DOUBLE
      1) Manufacturer: Dynamic Diagnostics
      2) Model Numbers: 300015
   b. TYPE 2: STAINLESS STEEL - TRIPLE
      1) Manufacturer: Dynamic Diagnostics
      2) Model Numbers: 300014
   c. TYPE 3: STAINLESS STEEL - QUAD
      1) Manufacturer: Dynamic Diagnostics
      2) Model Numbers: 300013

3 EXECUTION

3.19.1.1 EXAMINATION

3.19.1.1.1 Acceptance of Surfaces and Conditions: Examine substrates to receive products and associated work for compliance with requirements and other conditions affecting performance. Proceed only when unsatisfactory conditions have been corrected in a manner complying with Contract Documents. Starting work within a particular area will be construed as acceptance of surface conditions.

3.19.1.2 INSTALLATION, GENERAL

3.19.1.2.1 Installation Quality Standards: In addition to standards listed elsewhere, install toilet accessories according to the following, unless otherwise specified in this Section:

3.19.1.2.1.1 Respective manufacturer's written installation instructions.
3.19.1.2.1.2 Accepted submittals.
3.19.1.2.1.3 Contract Documents.

3.19.1.3 PREPARATION

3.19.1.3.1 General: Comply with manufacturer's instructions, recommendations and specifications for cleaning and surface preparation. Surfaces shall have no defects, contaminants, or errors which would result in poor or potentially defective installation or would cause latent defects in Work.

3.19.1.4 INSTALLATION

3.19.1.4.1 General Requirements: Install toilet accessories level, plumb, and firmly anchored in locations and at heights indicated. Use fasteners that are appropriate to substrate indicated and as recommended by respective product manufacturer.

3.19.1.4.2 Grab Bars: Install to withstand downward load of minimum 250 lbf (1.10 kN) according to ASTM F 446.

3.19.1.4.3 Accessories within Shower and Tub Alcoves: Set flanges of accessories in sealant, install sealant in screw holes prior setting screws, and cover screw head prior to snapping on cover, to prevent water infiltration.

3.19.1.4.4 Mirrors: Secure to walls in concealed, tamper-resistant manner with special hangers, toggle bolts, or screws.

END OF SECTION

SECTION 104116

EMERGENCY KEY CABINETS

PART 1 - GENERAL

1.1 SUMMARY

A. Section Includes: Emergency key cabinets and supplementary items necessary for installation.

1.2 ACTION SUBMITTALS

A. Product Data: Manufacturer's technical literature for each product and system indicated.

1. Include manufacturer's specifications for materials, finishes, construction details, installation instructions, and recommendations for maintenance.

B. Samples for Verification Purposes: 3 in (75 mm) square sample of exposed metal to indicate compliance with finish specified.

1.3 QUALITY ASSURANCE

A. Local Authority Approval: Obtain approval of local fire department for keyway access and exact location and type of emergency key cabinet mounting prior to Product Data submittal.

B. Emergency key cabinet will be required at building entrance(s) designated by the fire department or at the building's fire control room; as appropriate.

1.4 COORDINATION

A. Coordinate installation of products and systems with interfacing and adjoining construction to provide a successful installation without failure.

PART 2 - PRODUCTS

2.1 MANUFACTURERS AND PRODUCTS

A. Basis of Design (Product Standard): Contract Documents are based on products and systems specified to establish a standard of quality. Other manufacturers offering products having equivalent characteristics may be considered, provided deviations are minor and comply with requirements of Contract Documents as judged by the Architect.

1. Knox Company.

2.2 MATERIALS, GENERAL

A. Single Source Responsibility: Furnish each type of product from single manufacturer. Provide secondary materials only as recommended by manufacturer of primary materials.

2.3 EMERGENCY KEY CABINET

A. Product Standard: Knox Company; Knox-Box 3200 Series Hinged or Lift-Off Door Model, as required by local jurisdiction. 1/4 in (6 mm) thick steel plate housing, 1/2 in (12 mm) thick steel door with interior gasket seal and stainless steel door hinge. Box and lock shall be UL Listed.

1. Lock shall have 1/8 in (3 mm) thick stainless steel dust cover with tamper seal mounting capability.
2. Lock shall have double-action rotating tumblers and hardened steel pins accessed by a biased cut key.
3. Coordinate other necessary requirements with local fire department.
4. Provide UL Listed alarm tamper switches as required by local fire department.

B. Size: One of the following, recessed or surface mount; as indicated on drawings:

1. Recessed Mount: 7 in (175 mm) wide by 7 in (175 mm) high by 3 in (75 mm) deep.

a. Provide manufacturer's standard recessed mounting kit (RMK) including shell housing and mounting hardware for cast-in construction.

2. Surface Mount: One of the following as required by local jurisdiction:

a. Hinged Door Model: 5 in (125 mm) wide by 4 in (100 mm) high by 3-3/4 in (94 mm) deep.
b. Surface Mount - Lift-Off Door Model: 4 in (100 mm) wide by 5 in (125 mm) high by 3-3/4 in (94 mm) deep.

C. Finish: Manufacturer's standard weather resistant polyester powder coat.

1. Color: As selected by Architect from manufacturer's standard colors.

PART 3 - EXECUTION

3.1 EXAMINATION

A. Acceptance of Surfaces and Conditions: Examine substrates to receive products and systems and associated work for compliance with requirements and other conditions affecting performance. Proceed only when unsatisfactory conditions have been corrected in a manner complying with Contract Documents. Starting work within a particular area will be construed as acceptance of surface conditions.

3.2 INSTALLATION, GENERAL

A. Installation Quality Standards: In addition to standards listed elsewhere, perform Work according to following, unless otherwise specified:

1. Respective manufacturer's written installation instructions.
2. Accepted submittals.
3. Contract Documents.

B. Control of Corrosion: Prevent galvanic action and other forms of corrosion by isolating metals and other materials from direct contact with incompatible materials.

3.3 PREPARATION

A. General: Comply with manufacturer's instructions, recommendations, and specifications for cleaning and surface preparation. Surfaces shall have no defects, contaminants, or errors which would result in poor or potentially defective installation or would cause latent defects in Work.

3.4 INSTALLATION OF EMERGENCY KEY CABINETS

A. Install in accordance with manufacturer's latest published requirements.

B. Recess Mount Units: Securely attach recessed mounting kit within cast-in wall construction. Shell housing box shall be flush with face of finished wall and plumb and level to ensure vertical alignment of box.

C. Tamper Switches: Install switches, including control wiring, as follows:

1. Refer to Division 26 Sections for connection to electrical power distribution system.
2. Coordinate tamper switches with building security system.

END OF SECTION

SECTION 10 4400

FIRE-PROTECTION SPECIALTIES

PART 1 - GENERAL

1.1 SUMMARY

A. Work required for this section includes fire protection specialties (fire extinguishers, cabinets, accessories) and supplementary items necessary to complete their installation.

B. Cabinets for fire protection standpipe and hose systems are specified in Division 21.

1.2 ACTION SUBMITTALS

A. Product Data: Manufacturer's technical literature for each product and system indicated.

1. Include manufacturer's specifications for materials, finishes, construction details, installation instructions, and recommendations for maintenance.
2. Fire Extinguishers: Include rating and classification.
3. Cabinets: Include roughing-in dimensions, details showing mounting methods, relationships of box and trim to surrounding construction, door hardware, cabinet type, trim style, and panel style.

1.3 QUALITY ASSURANCE

A. NFPA Compliance: Fabricate and label fire extinguishers to comply with NFPA 10, "Standard for Portable Fire Extinguishers."

B. Fire Extinguishers: Listed and labeled for type, rating, and classification by an independent testing agency acceptable to authorities having jurisdiction.

1.4 PRE-INSTALLATION CONFERENCE

A. Pre-Installation Conference: Before Work begins, conduct conference at Project site.

1.5 COORDINATION

A. Coordinate installation of products and systems with interfacing and adjoining construction to provide a successful installation without failure.

PART 2 - PRODUCTS

2.1 MANUFACTURERS AND PRODUCTS

A. Acceptable Manufacturers and Products: Subject to compliance with requirements of Contract Documents as judged by the Architect, provide product by one of manufacturers listed. If not listed, submit as substitution according to the Conditions of the Contract and Division 01 Section "Substitution Procedures".

1. J. L. Industries, Inc.; a division of Activar Construction Products Group.
2. Larsen's Manufacturing Company.
3. Potter Roemer LLC.

2.2 MATERIALS, GENERAL

A. Single Source Responsibility: Furnish each type of product from single manufacturer. Provide secondary materials only as recommended by manufacturer of primary materials.

2.3 MATERIALS

A. Stainless-Steel Sheet: ASTM A 666/A 666M, Type 302 or Type 304 alloy.

2.4 PORTABLE FIRE EXTINGUISHERS

A. General: Provide fire extinguishers of type, size, and capacity for each cabinet and other locations indicated.

B. Multipurpose Dry Chemical Type; typical unless otherwise indicated or specified: UL-rated 2A:10B:C, 5-lb nominal capacity, in enameled steel container.

2.5 FIRE-PROTECTION CABINETS

A. Cabinet Construction: Provide manufacturer's standard box (tub), with trim, frame, door, and hardware to suit cabinet type, trim style, and door style indicated. Weld joints and grind smooth. Miter and weld perimeter door frames.

B. Cabinet:

1. Material:
   a. Stainless steel.

2. Type: Suitable for 10 lb. Fire extinguisher.
3. Mounting:
   a. Semi-recessed Cabinet: One-piece combination trim and perimeter door frame overlapping surrounding wall surface with exposed trim face and wall return at outer edge (backbend).

4. Trim Style: Fabricate cabinet trim in one piece with corners mitered, welded, and ground smooth. Same metal and finish as door.

   a. Exposed Trim: One-piece combination trim and perimeter door frame overlapping surrounding wall surface with exposed trim face and wall return at outer edge (backbend).
      1) Square-Edge Trim: 1-1/4 in (32 mm) to 1-1/2 in (38 mm) backbend depth.

5. Door Material:
   a. Stainless steel.

6. Door Glazing: Manufacturer's standard tempered float glass (clear).
7. Door Style: Manufacturer's standard vertical duo panel design.
8. Door Construction: Fabricate doors according to manufacturer's standards, of materials indicated, and coordinated with cabinet types and trim styles selected. Provide minimum

1/2 in (12mm) thick door frames, fabricated with tubular stiles and rails, and hollow-metal design.

9. Door Hardware: Provide manufacturer's standard door-operating hardware of proper type for cabinet type, trim style, and door material and style indicated. Provide either lever handle with cam-action latch, or exposed or concealed door pull and friction latch. Provide concealed or continuous-type hinge permitting door to open 180 degrees.

2.6 ACCESSORIES

A. Mounting Brackets: Manufacturer's standard steel, designed to secure extinguisher, of sizes required for types and capacities of extinguishers indicated, with plated or baked-enamel finish. Provide brackets for extinguishers not located in cabinets.

B. Identification: Provide lettering to comply with authorities having jurisdiction for letter style, color, size, spacing, and location.

1. Bracket-Mounted Extinguishers: Identify with the words "FIRE EXTINGUISHER" in red letter decals applied to wall surface.
2. Fire Extinguisher Cabinet: Identify with the words "FIRE EXTINGUISHER" in black die cut vinyl letters applied to door.

2.7 GENERAL FINISH REQUIREMENTS, FIRE-PROTECTION CABINETS

A. Comply with NAAMM's "Metal Finishes Manual for Architectural and Metal Products" for recommendations for applying and designating finishes.

B. Protect mechanical finishes on exposed surfaces of fire protection cabinets from damage by applying a strippable, temporary protective covering before shipping.

C. Finish fire protection cabinets after assembly.

D. Appearance of Finished Work: Noticeable variations in same piece are not acceptable. Variations in appearance of adjoining components are acceptable if they are within the range of approved Samples and are assembled or installed to minimize contrast.

2.8 STEEL FINISHES, FIRE-PROTECTION CABINETS

A. Surface Preparation: Remove mill scale and rust, if present, from uncoated steel, complying with SSPC-SP 5/NACE No. 1, "White Metal Blast Cleaning" or SSPC-SP 8, "Pickling". After cleaning, apply a conversion coating suited to the organic coating to be applied over it.

B. Baked-Enamel or Powder-Coat Finish: Immediately after cleaning and pretreating, apply manufacturer's standard two-coat, baked-on finish consisting of prime coat and thermosetting topcoat. Comply with coating manufacturer's written instructions for applying and baking to achieve a minimum dry film thickness of 2 mils (0.05 mm).

1. Color and Gloss: As selected by Architect from manufacturer's full range.

2.9 STAINLESS-STEEL FINISHES, FIRE-PROTECTION CABINETS

A. Surface Preparation: Remove tool and die marks and stretch lines, or blend into finish.

B. Polished Finishes: Grind and polish surfaces to produce uniform finish, free of cross scratches.

1. Run grain of directional finishes with long dimension of each piece.
2. When polishing is completed, passivate and rinse surfaces. Remove embedded foreign matter and leave surfaces chemically clean.
3. Directional Satin Finish: No. 4.

PART 3 - EXECUTION

3.1 EXAMINATION

A. Acceptance of Surfaces and Conditions: Examine substrates to receive products and systems and associated work for compliance with requirements and other conditions affecting performance. Proceed only when unsatisfactory conditions have been corrected in a manner complying with Contract Documents. Starting work within a particular area will be construed as acceptance of surface conditions.

B. Examine fire extinguishers for proper charging and tagging.

1. Remove and replace damaged, defective, or undercharged fire extinguishers.

3.2 INSTALLATION, GENERAL

A. Installation Quality Standards: In addition to standards listed elsewhere, perform Work according to following, unless otherwise specified:

1. Respective manufacturer written installation instructions.
2. Accepted submittals.
3. Contract Documents.

B. Control of Corrosion: Prevent galvanic action and other forms of corrosion by isolating metals and other materials from direct contact with incompatible materials.

3.3 PREPARATION

A. General: Comply with manufacturer's instructions, recommendations, and specifications for cleaning and surface preparation. Surfaces shall have no defects, contaminants, or errors which would result in poor or potentially defective installation or would cause latent defects in Work.

3.4 INSTALLATION

A. Comply with manufacturer's written instructions for installing fire-protection specialties.

B. Install in locations and at mounting heights indicated or, if not indicated, at heights acceptable to authorities having jurisdiction.

1. Prepare recesses for cabinets as required by type and size of cabinet and trim style.
2. Fasten cabinets to structure, square and plumb.

3.5 ADJUSTING, CLEANING, AND PROTECTION

A. Adjust cabinet doors that do not swing or operate freely.

B. Refinish or replace cabinets and doors damaged during installation.

C. Provide final protection and maintain conditions that ensure that cabinets and doors are without damage or deterioration at the time of Substantial Completion.

END OF SECTION

SECTION 10 5113

METAL LOCKERS

PART 1 - GENERAL

1.1 SUMMARY

A. Work required for this Section includes metal lockers and supplementary items necessary to complete their installation.

1.2 ACTION SUBMITTALS

A. Product Data: Manufacturer's technical literature for each product and system indicated.

1. Include manufacturer's specifications for materials, finishes, construction details, installation instructions, and recommendations for maintenance for each type of locker and bench.

B. Shop Drawings: Show details of fabrication and installation, including plans, elevations, sections, details of components and attachments to other work. Distinguish between shop and field-assembled work

1. Show locker fillers, trim, base, tops, and accessories. Include locker-numbering sequence.

C. Samples for Initial Selection: Manufacturer's color charts showing the full range of colors available for units with factory-applied color finishes.

D. Samples for Verification: For each locker color selected, in manufacturer's standard size samples, but not less than 4 inch square, showing the full range of color, texture, and pattern variations expected. Prepare Samples from the same material to be used for the Work.

1.3 CLOSEOUT SUBMITTALS

A. Maintenance Data: For adjusting, repairing, and replacing locker doors and latching mechanisms to include in maintenance manuals specified in Division 01.

1.4 QUALITY ASSURANCE

A. Regulatory Requirements: Unless otherwise indicated, at least 5 percent but no less than one of each type of lockers shall comply with accessibility requirements, of the U.S. Architectural & Transportation Barriers Compliance Board's "Americans with Disabilities Act (ADA), Accessibility Guidelines for Buildings and Facilities (ADAAG).

1. Provide not less than one shelf located within required reach ranges.
2. Provide hardware that does not require tight grasping, pinching, or twisting of the wrist, and that operates with a force of not more than 5 lbf.

1.5 PRE-INSTALLATION CONFERENCE

A. Pre-Installation Conference: Before Work begins, conduct conference at Project site.

1.6 COORDINATION

A. Coordinate installation of products and systems with interfacing and adjoining construction to provide a successful installation without failure.

PART 2 - PRODUCTS

2.1 MANUFACTURERS AND PRODUCTS

A. Acceptable Manufacturers and Products: Subject to compliance with requirements of Contract Documents as judged by the Architect, provide product by one of manufacturers listed. If not listed, submit as substitution according to the Conditions of the Contract and Division 01 Section "Substitution Procedures".

B. Bases of design:

a. 6’ high, 12”W X 24”H X15” D triple tier, one wide, and three wide. With sloping top, end and front base, with resettable factory installed combination lock.

b. 6’ high, 12”W X 24”H X15” D four tier one wide and three wide. With sloping top, end and front base.

c. 6’ High, 15” W X 24”H X 18” D triple tier, one wide and three wide. With sloping top, end and front base.

1. Art Metal Products; Standard K.D. Lockers.
2. ASI Storage Solutions Inc.; Traditional Collection.
3. DeBourgh Mfg. Co.; Worley Lockers.
4. List Industries Inc.; Classic Line of Superior KD Lockers.
5. Lyon Workspace Products, LLC; Standard Lockers.
6. Penco Products, Inc.; Vanguard Lockers.
7. Republic Storage Systems Company; Standard Lockers.
8. Salsbury industries

2.2 MATERIALS, GENERAL

A. Single Source Responsibility: Furnish each type of product from single manufacturer. Provide secondary materials only as recommended by manufacturer of primary materials.

2.3 MATERIALS

A. Cold-Rolled Steel Sheet: ASTM A 366, matte finish, suitable for exposed applications, and stretcher leveled or roller leveled to stretcher-leveled flatness.

B. Fasteners: Zinc- or nickel-plated steel, slotless-type exposed bolt heads, and self-locking nuts or lock washers for nuts on moving parts.

2.4 WARDROBE LOCKERS

A. Body: Form backs, tops, bottoms, sides, and intermediate partitions from 0.0239 inch (24 gage) minimum steel sheet; flanged for double thickness at back vertical corners.

B. Frames: Form channel frames from minimum 0.0598-inch- thick steel sheet; lapped and welded at corners. Form continuous integral door strike on vertical frame members. Provide resilient bumpers to cushion door closing.

1. Latch Hooks: Form from minimum 0.1046-inch- thick steel; welded or riveted to door frames.

2. Cross Frames for Multi-Tier Lockers: Form intermediate channel cross frames between tiers from minimum 0.0598-inch- (1.50-mm-) thick steel sheet. Weld to vertical frame members.

C. Doors: One-piece 0.0598 inch (16 gage) minimum steel sheet, formed into channel shape at vertical edges and flanged at right angles at top and bottom edges. Fabricate to prevent springing when opening or closing, and to swing 180 degrees.

1. Reinforcement: Brace or reinforce inner face of doors more than 15 inches wide.

2. Acoustical Treatment: Fabricate lockers for quiet operation with manufacturer's standard rattle-free latching mechanism and moving components isolated to prevent metal-to-metal contact.

3. Louvered Vents: Stamped, louvered vents in door face, as follows:

a. Single-Tier Lockers: No fewer than six louver openings at top and bottom.

b. Double-Tier Lockers: No fewer than three louver openings at top and bottom.

c. Multiple-Tier Lockers: No fewer than two louver openings at top and bottom, or three louver openings at top or bottom.

D. Shelves: Provide hat shelf in single-tier units; fabricated from minimum 0.0239-inch- thick, formed steel sheet; flanged on all edges.

E. Hinges: Steel, full loop, five or seven knuckle; tight pin; minimum 2 inches high. Weld to inside of door frame and attach to door with at least two factory-installed fasteners that are completely concealed and tamper resistant when door is closed.

1. Provide at least three hinges for each door more than 42 inches high and at least two hinges for each door 42 inches high or less.

F. Recessed Handle and Latch: Manufacturer's standard housing, formed from 0.0359-inch- thick nickel-plated steel or stainless steel, with integral door pull, recessed for latch lifter and locking devices; nonprotruding latch lifter; and automatic, prelocking, pry-resistant latch, as follows:

1. Provide minimum three-point latching for each door more than 42 inches high; minimum two-point latching for each door 42 inches high or less.

a. Provide strike and eye for padlock.

2.5 BUILT-IN LOCKS

A. Fabricate lockers to receive the following locking devices, installed on lockers using security-type fasteners:

1. Combination Locks: Built-in key-controlled, three-number dialing combination locks; capable of at least five combination changes made automatically with a control key. Comply with the following:

a. Bolt Operation: Manually locking dead bolt or automatically locking spring bolt, as standard with manufacturer.

2.6 LOCKER ACCESSORIES

A. Interior Equipment: Furnish each locker with the following items, unless otherwise indicated:

1. Hooks: Manufacturer's standard zinc-plated, ball-pointed steel. Provide one double-prong ceiling hook, and not fewer than two single-prong wall hooks for single-, double-, and triple-tier units. Attach hooks with at least two fasteners.

2. Coat Rods: Manufacturer's standard galvanized steel. Provide rod in lieu of ceiling hook for lockers 18 inches deep or greater.

B. Number Plates: Manufacturer's standard etched, embossed, or stamped, aluminum number plates with numerals at least 3/8 inch high. Number lockers in sequence indicated. Attach plates to each locker door, near top, centered, with at least two aluminum rivets.

C. Continuous Metal Base: Minimum 0.0598-inch- (16 gage) thick steel sheet, 6 inch high channel or zee profiled for stiffness, fabricated in lengths as long as practicable to enclose base and base ends of lockers, and finished to match lockers.

D. Continuously Sloping Tops for Non-Recessed Units: Manufacturer's standard, fabricated from minimum 0.0359-inch- (20 gage) thick steel sheet, for installation over lockers with separate flat tops. Fabricate tops in lengths as long as practicable, without visible fasteners at splice locations, finished to match lockers. Provide fasteners, filler plates, supports, and vertical end closures.

E. Recess Trim for Recessed Units: Manufacturer's standard; fabricated from minimum 0.0478-inch- (18 gage) thick steel sheet, minimum 2-1/2-inch face width, and finished to match lockers. Fabricate trim in lengths as long as practicable.

F. Filler Panels: Manufacturer's standard; fabricated from minimum 0.0478-inch- (18 gage) thick steel sheet in an unequal leg angle shape, and finished to match lockers. Provide slip joint filler angle formed to receive filler panel.

G. Finished End Panels for Non-Recessed Units: Manufacturer's standard; fabricated from minimum 0.0239-inch- (24 gage) thick steel sheet, finished to match lockers, and designed for concealing exposed ends of non recessed lockers.

2.7 LOCKER BENCHES

A. Bench Tops: Manufacturer's standard one-piece units, with rounded corners and edges, of the following material; minimum 9-1/2 inches wide by 1-1/4 inches thick (241 mm wide by 32 mm thick) except provide minimum 20-inch- (508-mm-) wide tops where accessible benches are indicated.

1. Laminated Maple: Laminated maple with one coat of clear sealer on all surfaces, and one coat of clear lacquer on top and sides.

B. Pedestals: Provide manufacturer's standard pedestal supports, with predrilled fastener holes, complete with fasteners and anchors, and as follows:

1. Fixed Type: Tubular steel, minimum 1-1/4-inch diameter, with minimum 0.1345-inch-thick steel flanges welded at top and base, and baked-enamel finish; floor anchored with exposed fasteners.

2. Color: Match locker units.

C. Furnish a minimum of two pedestals for each bench, with pedestal spacing not more than 72 inches o.c.

2.8 FABRICATION

A. Unit Principle: Fabricate each locker with an individual door and frame, individual top, bottom, back, and shelves, and common intermediate uprights separating compartments.

B. Knocked-Down Construction: Fabricate lockers for nominal assembly at Project site.

C. Fabricate lockers square, rigid, and without warp, with metal faces flat and free of dents or distortion. Make exposed metal edges free of sharp edges and burrs, and safe to touch. Weld frame members together to form a rigid, one-piece assembly.

1. Form locker-body panels, doors, shelves and accessories from one-piece steel sheet, unless otherwise indicated.

2.9 FINISHES, GENERAL

A. Comply with NAAMM's "Metal Finishes Manual for Architectural and Metal Products" for recommendations for applying and designating finishes.

B. Protect mechanical finishes on exposed surfaces from damage by applying a strippable, temporary protective covering before shipping.

C. Appearance of Finished Work: Variations in appearance of abutting or adjacent pieces are acceptable if they are within one-half of the range of approved Samples. Noticeable variations in the same piece are not acceptable. Variations in appearance of other components are acceptable if they are within the range of approved Samples and are assembled or installed to minimize contrast.

2.10 STEEL SHEET FINISHES

A. Surface Preparation: Clean surfaces of dirt, oil, grease, mill scale, rust, and other contaminants that could impair paint bond. Use manufacturer's standard methods.

B. Baked-Enamel Finish: Immediately after cleaning and pretreating, apply manufacturer's standard baked-enamel finish consisting of a thermosetting topcoat. Comply with paint manufacturer's written instructions for applying and baking to achieve a minimum dry film thickness of 1.4 mils on doors, frames, and legs, and 1.1 mils elsewhere.

1. Color and Gloss: Gray.

PART 3 - EXECUTION

3.1 EXAMINATION

A. Acceptance of Surfaces and Conditions: Examine substrates to receive products and systems and associated work for compliance with requirements and other conditions affecting performance. Proceed only when unsatisfactory conditions have been corrected in a manner complying with Contract Documents. Starting work within a particular area will be construed as acceptance of surface conditions.

3.2 INSTALLATION, GENERAL

A. Installation Quality Standards: In addition to standards listed elsewhere, perform Work according to following, unless otherwise specified:

1. Respective manufacturer written installation instructions.
2. Accepted submittals.
3. Contract Documents.

3.3 PREPARATION

A. General: Comply with manufacturer's instructions, recommendations, and specifications for cleaning and surface preparation. Surfaces shall have no defects, contaminants, or errors which would result in poor or potentially defective installation or would cause latent defects in Work.

3.4 INSTALLATION

A. Install metal lockers and accessories level, plumb, rigid, and flush according to manufacturer's written instructions.

B. Assemble knocked-down lockers with standard fasteners, with no exposed fasteners on door faces and face frames.

C. Anchor lockers to floors and walls at intervals recommended by manufacturer, but not more than 36 inches o.c. Install anchors through backup reinforcing plates where necessary to avoid metal distortion, using concealed fasteners.

D. Fit exposed connections of trim, fillers, and closures accurately together to form tight, hairline joints, with concealed fasteners and splice plates.

1. Recessed Units:

a. Attach recess trim to recessed lockers with concealed clips.

2. Non-Recessed Units:

a. Attach sloping top units to lockers, with closures at exposed ends.
b. Attach finished end panels with fasteners only at perimeter to conceal exposed ends of non-recessed lockers.

E. Fixed Locker Benches: Anchor locker benches to floor. Uniformly space pedestals not more than 72 inches apart and securely fasten to bench top and anchor to floor.

3.5 ADJUSTING, CLEANING, AND PROTECTION

A. Adjust doors and latches to operate easily without binding. Verify that integral locking devices operate properly.

B. Clean interior and exposed exterior surfaces and polish stainless-steel and nonferrous-metal surfaces.

C. Protect lockers from damage, abuse, dust, dirt, stain, or paint. Do not permit locker use during construction.

D. Touch up marred finishes, or replace locker units that cannot be restored to factory-finished appearance. Use only materials and procedures recommended or furnished by locker manufacturer.

3.6 LOCKER SCHEDULE

A. Refer to Interior Finish Schedule on drawings.

3.7 FINISH SCHEDULE

A. Locker Color and Gloss: Gray.

END OF SECTION

SECTION 10 5713

WALL MOUNTED COAT RACK AND SHELF

PART 1 - GENERAL

1.1 SUMMARY

A. Section Includes: Wall mounted coat rack and shelf along with supplementary items necessary for installation.

1.2 ACTION SUBMITTALS

A. Product Data: Manufacturer's technical literature for each product and system indicated.

1. Include manufacturer's specifications for materials, finishes, construction details, installation instructions, and recommendations for maintenance.

B. Shop Drawings: Show details of fabrication and installation, including plans, elevations, sections, details of components and attachments to other work. Distinguish between shop and field-assembled work.

1.3 INFORMATIONAL SUBMITTALS

A. Qualification Data:

1. For firms and persons specified in "Quality Assurance" to demonstrate their capabilities and experience. Include list of completed projects.

1.4 QUALITY ASSURANCE

A. Manufacturer Qualifications: Manufacturer with not less than 5 years of experience in the successful production and in-service performance of products and systems similar to scope of this Project.

1.5 PROJECT CONDITIONS

A. Field Measurements: Where products and systems are indicated to fit walls and other construction, verify dimensions by field measurements before fabrication.

1.6 COORDINATION

A. Coordinate installation of products and systems with interfacing and adjoining construction to provide a successful installation without failure.

PART 2 - PRODUCTS

2.1 MANUFACTURERS AND PRODUCTS

A. Acceptable Manufacturers and Products: Subject to compliance with requirements of Contract Documents as judged by the Architect, provide product by one of manufacturers listed. If not listed, submit as substitution according to the Conditions of the Contract and Division 01 Section "Substitution Procedures".

B. Available Manufacturers and Products: Subject to compliance with requirements of Contract Documents as judged by the Architect, manufacturers offering products that may be incorporated into the Work include, but are not limited to, those listed.

C. Basis of Design (Product Standard): Contract Documents are based on products and systems specified to establish a standard of quality. Other manufacturers offering products having equivalent characteristics may be considered, provided deviations are minor and comply with requirements of Contract Documents as judged by the Architect.

1. EMCO Specialty Products, Inc.; Model R1, satin finish; identified on the drawings as Miscellaneous Specialty and Equipment item CR.

PART 3 - EXECUTION

3.1 EXAMINATION

A. Acceptance of Surfaces and Conditions: Examine substrates to receive products and systems and associated work for compliance with requirements and other conditions affecting performance. Proceed only when unsatisfactory conditions have been corrected in a manner complying with Contract Documents. Starting work within a particular area will be construed as acceptance of surface conditions.

3.2 INSTALLATION, GENERAL

A. Installation Quality Standards: In addition to standards listed elsewhere, perform Work according to following, unless otherwise specified:

1. Respective manufacturer/fabricator's written installation instructions.
2. Accepted submittals.
3. Contract Documents.

B. Control of Corrosion: Prevent galvanic action and other forms of corrosion by isolating metals and other materials from direct contact with incompatible materials.

3.3 PREPARATION

A. General: Comply with manufacturer's instructions, recommendations, and specifications for cleaning and surface preparation. Surfaces shall have no defects, contaminants, or errors which would result in poor or potentially defective installation or would cause latent defects in Work.

1. Install wall blocking as required.

3.4 INSTALLATION

A. Install coat rack and shelf level and plumb, according to manufacturers instructions.

1. Where dissimilar metals contact each other, protect against galvanic action by painting contact surfaces with bituminous coating or by applying other permanent separation as recommended by manufacturer.

B. Install wall strip using fasteners required for wall type. Height to be based on specified height of shelf.

C. Install brackets, slat and rod using fasteners approved by manufacturer.

END OF SECTION

SECTION 10 7310

ALUMINUM WALKWAYS AND CANOPIES

PART 1 - GENERAL

1.1 SUMMARY

A. Section Includes: Aluminum walkway covers and canopies and supplementary items necessary for installation.

1.2 DESCRIPTION OF WORK

A. Definition: Aluminum walkways and canopies shall consist entirely of extruded aluminum sections (roll-formed not acceptable). System shall consist of heli-arc welded, one-piece rigid structural bents (column and beam assemblies), decking, fascia, accessory items and hardware to provide a complete system.

B. Water shall drain from deck into designated beams and out at grade level of columns through weepholes.

1.3 DELEGATED ENGINEERING REQUIREMENTS

A. Contract Documents Design Intent: Drawings and Specifications indicate design intent for products and systems and do not necessarily indicate or specify total Work required and shall not be construed as an engineered design. Furnish and install all Work required for a complete installation.

B. Delegated Engineering Responsibility: Contractor shall employ a qualified professional engineer to provide engineering for products and systems including attachment to building structure required to meet design intent of Contract Documents including, but not limited to, the following.

1. Preparation of structural analysis data including engineering calculations, shop drawings and other submittals signed and sealed by the qualified professional engineer responsible for their preparation.

C. Delegated Engineering Professional Qualifications: Professional engineer legally authorized to practice in Florida and experienced in providing engineering services of kind indicated for products and systems similar to this Project and has a record of successful in-service performance.

D. Coordination of Contract Documents and Work:

1. Product Variations: In the event of minor differences between products and systems of acceptable or available manufacturers, Contractor shall notify Architect of such differences and resolve conflicts in a timely manner. Failure of Contractor to provide notification shall be construed as acceptance of conditions indicated, and changes caused by minor differences between products and Contract Documents shall be included in the Work at no additional cost to Owner.

2. Allowable Adjustments: Minor dimension and profile adjustments may be made in interest of fabrication or erection methods or techniques or ability to satisfy design intent, provided design intent is maintained as determined by Architect. Proposed deviations shall include a detailed analysis of impact to adjacent substrates or other building systems, including related design or construction cost impacts. If accepted by Architect, deviations causing changes in materials, constructability, substrates, or conditions shall be included in the Work at no additional cost to Owner.

1.4 ACTION SUBMITTALS

A. Product Data: Manufacturer's technical literature for each product and system indicated.

1. Include manufacturer's specifications for materials, finishes, construction details, installation instructions, and recommendations for maintenance.

B. Shop Drawings: Show details of fabrication and installation, including plans, elevations, sections, details of components and attachments to other work. Distinguish between shop and field-assembled work.

1. Submit detailed drawings, layout of canopies system, bent locations (identify drain columns and wet bents), all mechanical joint locations with complete details, connections, jointing and accessories. Include details of concrete footings and bent anchorage.
2. Submit complete details with structural properties (moment of inertia, section modules, modules of elasticity, etc.) for all proposed sections (beams, columns, decking and other structural members).

1.5 INFORMATIONAL SUBMITTALS

A. Delegated Engineering Calculations: Informational submittal for products indicated to comply with design loads, include structural analysis data signed and sealed by the qualified professional engineer responsible for their preparation; test reports are not acceptable substitute for calculations.

B. Manufacturer’s Project Acceptance Document: Certification by the manufacturer that its product(s) are approved, acceptable, suitable for use in specific locations, for specific details, and for applications indicated, specified, or required, and that a warranty will be issued.

C. Qualification Data: For manufacturer, installer, and professional engineer.

1. For firms and persons specified in "Quality Assurance" to demonstrate their capabilities and experience. Include lists of completed projects with project names and addresses, names and addresses of Architects and Owners, and other information specified.

1.6 QUALITY ASSURANCE

A. Manufacturer Qualifications: Manufacturer with not less than 10 years experience with successful production of products and systems similar to scope of this Project, with a record of successful in-service performance and completion of projects for a period of not less than 10 years, and with sufficient production capability, facilities, and personnel to produce required Work.

B. Installer Qualifications:

1. Experience: Installer with not less than 5 years experience in performing specified Work similar to scope of this Project, with a record of successful in-service performance and completion of projects for a period of not less than 5 years, and with sufficient production capability, facilities, and personnel to produce required Work.
2. Supervision: Installer shall maintain a competent supervisor who is at Project during times specified Work is in progress, and, who is experienced in installing systems similar to type and scope required for Project.
3. Manufacturer/Fabricator Acceptance: Installer shall be certified, approved, licensed, or acceptable to manufacturer to install products.

C. Manufacturer's Technical Representative Qualifications: Direct employee of technical services department of manufacturer with minimum of 5 years experience in providing recommendations, observations, evaluations, and problem diagnostics. Sales representatives are not acceptable.

D. Codes and Standards: Comply with provisions of the following except as other- wise indicated:

1. International Building Code, latest addition with amendments, if any.
2. AWS (American Welding Society) standards for structural aluminum welding.

1.7 DELIVERY, STORAGE AND HANDLING:

A. Deliver, store and handle covered walkway system components as recommended by manufacturer. Handle and store in a manner to avoid deforming members and to avoid excessive stresses.

1.8 PROJECT CONDITIONS

A. Field Measurements: Where products and systems are indicated to fit walls and other construction, verify dimensions by field measurements before fabrication and indicate measurements on Shop Drawings. Coordinate fabrication schedule with construction progress to avoid delaying the Work.

1.9 COORDINATION

A. Coordinate installation of products and systems with interfacing and adjoining construction to provide a successful installation without failure.

PART 2 - PRODUCTS

2.1 MANUFACTURERS

A. Basis of Design (Product Standard): Contract Documents are based on products and systems specified to establish a standard of quality. Other available manufacturers offering products having equivalent characteristics may be considered, provided deviations are minor and comply with requirements of Contract Documents as judged by the Architect.

1. DITT-Deck Extruded Aluminum Walkway Cover System.

B. Available Manufacturers and Products: Subject to compliance with requirements of Contract Documents as judged by the Architect, manufacturers offering products that may be incorporated into the Work include, but are not limited to, those listed.

1. AVAdek Walkway Cover Systems and Canopies.
2. DITT-Deck Extruded Aluminum Canopies System by Dittmer Architectural Aluminum.
3. Mapes Industries.
4. Peachtree Protective Covers, Inc.
5. Superior Metal Products, LLC

2.2 PERFORMANCE REQUIREMENTS

A. General Performance: Engineer products and systems to withstand loads within limits of allowable working stresses of the materials involved under conditions indicated and without permanent deformation or failure of materials.

B. System Performance: Provide aluminum covered walkway system that has been designed, produced, fabricated and installed to withstand normal temperature changes as well as live loading, dead loading and wind loading in compliance with International Building Code requirements for geographic area in which work is located and as follows:

1. Live Load: 20 psf minimum
2. Structural design for wind forces: Comply with ANSI A58.1-1982
3. Design Wind Velocity: 110 mph.
4. Stability Criteria: Florida Building Code

C. Sizes shown on drawings are to be considered minimum.

D. Structure shall be capable of sustaining severe icing, hail, hurricane force winds and supporting a concentrated load such as being walked upon.

2.3 MATERIALS

A. Single Source Responsibility: Furnish each type of product from single manufacturer. Provide secondary materials only as recommended by manufacturer of primary materials.

B. All aluminum extrusions shall be alloy 6063 heat treated to a T-6 temper.

C. Standard finish for all components shall be satin anodized 204-R1 meeting Aluminum Association Specification AA-M-10C-22A-21.

D. Fasteners:

1. Deck Screws (rivets not permitted): Type 18-8 non-magnetic stainless steel sealed with a neoprene "O" ring beneath 5/8" outside dimension, conical washer.
2. Fascia Rivets: Size 3/16" by 1/2" grip range aluminum rivets with aluminum mandrel.
3. Bolts: All bolts, nuts and washers to be 18-8 non-magnetic stainless steel.
4. Tek Screws: Not permitted.

2.4 FABRICATION

A. Comply with indicated profiles, dimensioned requirements, and structural requirements.

B. Use sections true to details with clean, straight, sharply defined profiles and smooth surfaces of uniform color and texture, free from defects impairing strength and durability.

C. All welding do be done by heli-arc process.

D. Mechanical joints shall consist of stainless steel bolts with a minimum of two (2) bolts per fastening. Bolts and nuts shall be installed in a concealed manner utilizing 1/2" thick by 1 1/2" aluminum bolt bars welded to structural members. All such mechanical joints must be detailed on shop drawings showing all locations.

E. Roof Deck: Extruded Aluminum shapes, interlocking self-flashing sections. Shop fabricate to lengths and panels widths required for field assembly. Depth of sections to comply with structural requirements. Provide shop induced camber in deck units with spans greater than 16'- 0" to offset dead load deflections. Welded dams are to be used at non-draining ends of deck.

F. Expansion joints, design structure for thermal expansion and contraction. Provide expansion joints as required.

G. Exposed rivets used to fasten bottom of fascia to deck to have finish to match fascia.

H. Apply a shop applied dip-coat of clear acrylic enamel to each column end terminating in concrete to insulate from electrolytic reaction. Column ends shall be pierced to "key" grout to bent for maximum uplift protection.

I. Shop Assembly: Preassemble units in shop to greatest extent possible and disassemble as necessary for shipping and handling limitations. Clearly mark units for reassembly and coordinated installation.

J. Concealed Drainage: Water shall drain from the roof deck to the beams to the columns and drain above ground or below ground and tie into storm sewer. Reference drawings for locations and type.

PART 3 - EXECUTION

3.1 EXAMINATION

A. Acceptance of Surfaces and Conditions: Examine substrates to receive products and systems and associated work for compliance with requirements and other conditions affecting performance. Proceed only when unsatisfactory conditions have been corrected in a manner complying with Contract Documents. Starting work within a particular area will be construed as acceptance of surface conditions.

3.2 INSTALLATION, GENERAL

A. Installation Quality Standards: In addition to standards listed elsewhere, perform Work according to following, unless otherwise specified:

1. Respective manufacturer’s written installation instructions.
2. Accepted submittals.
3. Contract Documents.

B. Control of Corrosion: Prevent galvanic action and other forms of corrosion by isolating metals and other materials from direct contact with incompatible materials. Protect aluminum embedded or otherwise in contact with concrete and masonry with alkali resistant clear acrylic.

3.3 PREPARATION

A. General: Comply with manufacturer's instructions, recommendations, and specifications for cleaning and surface preparation. Surfaces shall have no defects, contaminants, or errors which would result in poor or potentially defective installation or would cause latent defects in Work.

3.4 CONCRETE FOOTINGS

A. Concrete footings are not work of this section. Refer to Division 03 Section "Cast-in-Place Concrete".

B. Sleeves (styrofoam blockouts) shall be furnished by canopies manufacturer and placed by general contractor.

3.5 INSTALLATION

A. Erection: Set roof support frames into pockets provided in top of footings or anchor with anchor bolts and base plates as required; set to required elevations, align, plumb and level; and grout in place with 2,000 psi Portland cement grout. Assure that grout fills all voids and "keys" to columns. Fill downspout units with grout to bottom of discharge level. Install aluminum deflectors after grouting. Follow manufacturer's instructions. Match to finish and elevation of adjacent sidewalks.

B. Install roof deck sections, accessories and related flashing in accordance with manufacturer's instructions. Provide roof slope for rain drainage without ponding water. Align and anchor roof deck units to structural support frames.

C. Take extreme care to prevent damage or scratching. Replace damaged components prior to installation. All workmanship must be top quality with neat miters and fitted joints.

3.6 FLASHING

A. Flashings: Flashings required between covered walkway system and adjoining structures are not work of this section. Refer to Division 07 Section "Sheet metal Flashing and Trim".

3.7 FIELD QUALITY CONTROL

A. Manufacturer's Field Service: Manufacturer's qualified technical representative shall inspect first day's Work and periodically inspect Work to ensure installation is proceeding in accordance with manufacturer's designs, recommendations, instructions, and warranty requirements. Representative shall submit written reports of each visit indicating observations, findings, and conclusions of inspection.

3.8 CLEANING AND PROTECTION

A. Damaged Units: Replace roof deck panels and other components of the work which have been damaged or have deteriorated beyond successful minor repair.

B. Cleaning: Remove protective coverings at time in project construction sequence which will afford greatest protection of work. Clean finished surfaces as recommended by manufacturer. Maintain in a clean condition during construction.

C. Protection: Advise Contractor of protection and surveillance procedures, as required to ensure that work of this section will be without damage or deterioration at time of substantial completion.

END OF SECTION

SECTION 10 7310

ALUMINUM WALKWAYS AND CANOPIES

PART 1 - GENERAL

1.1 SUMMARY

A. Section Includes: Aluminum walkway covers and canopies and supplementary items necessary for installation.

1.2 DESCRIPTION OF WORK

A. Definition: Aluminum walkways and canopies shall consist entirely of extruded aluminum sections (roll-formed not acceptable). System shall consist of heli-arc welded, one-piece rigid structural bents (column and beam assemblies), decking, fascia, accessory items and hardware to provide a complete system.

B. Water shall drain from deck into designated beams and out at grade level of columns through weepholes.

1.3 DELEGATED ENGINEERING REQUIREMENTS

A. Contract Documents Design Intent: Drawings and Specifications indicate design intent for products and systems and do not necessarily indicate or specify total Work required and shall not be construed as an engineered design. Furnish and install all Work required for a complete installation.

B. Delegated Engineering Responsibility: Contractor shall employ a qualified professional engineer to provide engineering for products and systems including attachment to building structure required to meet design intent of Contract Documents including, but not limited to, the following.

1. Preparation of structural analysis data including engineering calculations, shop drawings and other submittals signed and sealed by the qualified professional engineer responsible for their preparation.

C. Delegated Engineering Professional Qualifications: Professional engineer legally authorized to practice in Florida and experienced in providing engineering services of kind indicated for products and systems similar to this Project and has a record of successful in-service performance.

D. Coordination of Contract Documents and Work:

1. Product Variations: In the event of minor differences between products and systems of acceptable or available manufacturers, Contractor shall notify Architect of such differences and resolve conflicts in a timely manner. Failure of Contractor to provide notification shall be construed as acceptance of conditions indicated, and changes caused by minor differences between products and Contract Documents shall be included in the Work at no additional cost to Owner.

2. Allowable Adjustments: Minor dimension and profile adjustments may be made in interest of fabrication or erection methods or techniques or ability to satisfy design intent, provided design intent is maintained as determined by Architect. Proposed deviations shall include a detailed analysis of impact to adjacent substrates or other building systems, including related design or construction cost impacts. If accepted by Architect, deviations causing changes in materials, constructability, substrates, or conditions shall be included in the Work at no additional cost to Owner.

1.4 ACTION SUBMITTALS

A. Product Data: Manufacturer's technical literature for each product and system indicated.

1. Include manufacturer's specifications for materials, finishes, construction details, installation instructions, and recommendations for maintenance.

B. Shop Drawings: Show details of fabrication and installation, including plans, elevations, sections, details of components and attachments to other work. Distinguish between shop and field-assembled work.

1. Submit detailed drawings, layout of canopies system, bent locations (identify drain columns and wet bents), all mechanical joint locations with complete details, connections, jointing and accessories. Include details of concrete footings and bent anchorage.
2. Submit complete details with structural properties (moment of inertia, section modules, modules of elasticity, etc.) for all proposed sections (beams, columns, decking and other structural members).

1.5 INFORMATIONAL SUBMITTALS

A. Delegated Engineering Calculations: Informational submittal for products indicated to comply with design loads, include structural analysis data signed and sealed by the qualified professional engineer responsible for their preparation; test reports are not acceptable substitute for calculations.

B. Manufacturer’s Project Acceptance Document: Certification by the manufacturer that its product(s) are approved, acceptable, suitable for use in specific locations, for specific details, and for applications indicated, specified, or required, and that a warranty will be issued.

C. Qualification Data: For manufacturer, installer, and professional engineer.

1. For firms and persons specified in "Quality Assurance" to demonstrate their capabilities and experience. Include lists of completed projects with project names and addresses, names and addresses of Architects and Owners, and other information specified.

1.6 QUALITY ASSURANCE

A. Manufacturer Qualifications: Manufacturer with not less than 10 years experience with successful production of products and systems similar to scope of this Project, with a record of successful in-service performance and completion of projects for a period of not less than 10 years, and with sufficient production capability, facilities, and personnel to produce required Work.

B. Installer Qualifications:

1. Experience: Installer with not less than 5 years experience in performing specified Work similar to scope of this Project, with a record of successful in-service performance and completion of projects for a period of not less than 5 years, and with sufficient production capability, facilities, and personnel to produce required Work.
2. Supervision: Installer shall maintain a competent supervisor who is at Project during times specified Work is in progress, and, who is experienced in installing systems similar to type and scope required for Project.
3. Manufacturer/Fabricator Acceptance: Installer shall be certified, approved, licensed, or acceptable to manufacturer to install products.

C. Manufacturer's Technical Representative Qualifications: Direct employee of technical services department of manufacturer with minimum of 5 years experience in providing recommendations, observations, evaluations, and problem diagnostics. Sales representatives are not acceptable.

D. Codes and Standards: Comply with provisions of the following except as other- wise indicated:

1. International Building Code, latest addition with amendments, if any.
2. AWS (American Welding Society) standards for structural aluminum welding.

1.7 DELIVERY, STORAGE AND HANDLING:

A. Deliver, store and handle covered walkway system components as recommended by manufacturer. Handle and store in a manner to avoid deforming members and to avoid excessive stresses.

1.8 PROJECT CONDITIONS

A. Field Measurements: Where products and systems are indicated to fit walls and other construction, verify dimensions by field measurements before fabrication and indicate measurements on Shop Drawings. Coordinate fabrication schedule with construction progress to avoid delaying the Work.

1.9 COORDINATION

A. Coordinate installation of products and systems with interfacing and adjoining construction to provide a successful installation without failure.

PART 2 - PRODUCTS

2.1 MANUFACTURERS

A. Basis of Design (Product Standard): Contract Documents are based on products and systems specified to establish a standard of quality. Other available manufacturers offering products having equivalent characteristics may be considered, provided deviations are minor and comply with requirements of Contract Documents as judged by the Architect.

1. DITT-Deck Extruded Aluminum Walkway Cover System.

B. Available Manufacturers and Products: Subject to compliance with requirements of Contract Documents as judged by the Architect, manufacturers offering products that may be incorporated into the Work include, but are not limited to, those listed.

1. AVAdek Walkway Cover Systems and Canopies.
2. DITT-Deck Extruded Aluminum Canopies System by Dittmer Architectural Aluminum.
3. Mapes Industries.
4. Peachtree Protective Covers, Inc.
5. Superior Metal Products, LLC

2.2 PERFORMANCE REQUIREMENTS

A. General Performance: Engineer products and systems to withstand loads within limits of allowable working stresses of the materials involved under conditions indicated and without permanent deformation or failure of materials.

B. System Performance: Provide aluminum covered walkway system that has been designed, produced, fabricated and installed to withstand normal temperature changes as well as live loading, dead loading and wind loading in compliance with International Building Code requirements for geographic area in which work is located and as follows:

1. Live Load: 20 psf minimum
2. Structural design for wind forces: Comply with ANSI A58.1-1982
3. Design Wind Velocity: 110 mph.
4. Stability Criteria: Florida Building Code

C. Sizes shown on drawings are to be considered minimum.

D. Structure shall be capable of sustaining severe icing, hail, hurricane force winds and supporting a concentrated load such as being walked upon.

2.3 MATERIALS

A. Single Source Responsibility: Furnish each type of product from single manufacturer. Provide secondary materials only as recommended by manufacturer of primary materials.

B. All aluminum extrusions shall be alloy 6063 heat treated to a T-6 temper.

C. Standard finish for all components shall be satin anodized 204-R1 meeting Aluminum Association Specification AA-M-10C-22A-21.

D. Fasteners:

1. Deck Screws (rivets not permitted): Type 18-8 non-magnetic stainless steel sealed with a neoprene "O" ring beneath 5/8" outside dimension, conical washer.
2. Fascia Rivets: Size 3/16" by 1/2" grip range aluminum rivets with aluminum mandrel.
3. Bolts: All bolts, nuts and washers to be 18-8 non-magnetic stainless steel.
4. Tek Screws: Not permitted.

2.4 FABRICATION

A. Comply with indicated profiles, dimensioned requirements, and structural requirements.

B. Use sections true to details with clean, straight, sharply defined profiles and smooth surfaces of uniform color and texture, free from defects impairing strength and durability.

C. All welding do be done by heli-arc process.

D. Mechanical joints shall consist of stainless steel bolts with a minimum of two (2) bolts per fastening. Bolts and nuts shall be installed in a concealed manner utilizing 1/2" thick by 1 1/2" aluminum bolt bars welded to structural members. All such mechanical joints must be detailed on shop drawings showing all locations.

E. Roof Deck: Extruded Aluminum shapes, interlocking self-flashing sections. Shop fabricate to lengths and panels widths required for field assembly. Depth of sections to comply with structural requirements. Provide shop induced camber in deck units with spans greater than 16'- 0" to offset dead load deflections. Welded dams are to be used at non-draining ends of deck.

F. Expansion joints, design structure for thermal expansion and contraction. Provide expansion joints as required.

G. Exposed rivets used to fasten bottom of fascia to deck to have finish to match fascia.

H. Apply a shop applied dip-coat of clear acrylic enamel to each column end terminating in concrete to insulate from electrolytic reaction. Column ends shall be pierced to "key" grout to bent for maximum uplift protection.

I. Shop Assembly: Preassemble units in shop to greatest extent possible and disassemble as necessary for shipping and handling limitations. Clearly mark units for reassembly and coordinated installation.

J. Concealed Drainage: Water shall drain from the roof deck to the beams to the columns and drain above ground or below ground and tie into storm sewer. Reference drawings for locations and type.

PART 3 - EXECUTION

3.1 EXAMINATION

A. Acceptance of Surfaces and Conditions: Examine substrates to receive products and systems and associated work for compliance with requirements and other conditions affecting performance. Proceed only when unsatisfactory conditions have been corrected in a manner complying with Contract Documents. Starting work within a particular area will be construed as acceptance of surface conditions.

3.2 INSTALLATION, GENERAL

A. Installation Quality Standards: In addition to standards listed elsewhere, perform Work according to following, unless otherwise specified:

1. Respective manufacturer’s written installation instructions.
2. Accepted submittals.
3. Contract Documents.

B. Control of Corrosion: Prevent galvanic action and other forms of corrosion by isolating metals and other materials from direct contact with incompatible materials. Protect aluminum embedded or otherwise in contact with concrete and masonry with alkali resistant clear acrylic.

3.3 PREPARATION

A. General: Comply with manufacturer's instructions, recommendations, and specifications for cleaning and surface preparation. Surfaces shall have no defects, contaminants, or errors which would result in poor or potentially defective installation or would cause latent defects in Work.

3.4 CONCRETE FOOTINGS

A. Concrete footings are not work of this section. Refer to Division 03 Section "Cast-in-Place Concrete".

B. Sleeves (styrofoam blockouts) shall be furnished by canopies manufacturer and placed by general contractor.

3.5 INSTALLATION

A. Erection: Set roof support frames into pockets provided in top of footings or anchor with anchor bolts and base plates as required; set to required elevations, align, plumb and level; and grout in place with 2,000 psi Portland cement grout. Assure that grout fills all voids and "keys" to columns. Fill downspout units with grout to bottom of discharge level. Install aluminum deflectors after grouting. Follow manufacturer's instructions. Match to finish and elevation of adjacent sidewalks.

B. Install roof deck sections, accessories and related flashing in accordance with manufacturer's instructions. Provide roof slope for rain drainage without ponding water. Align and anchor roof deck units to structural support frames.

C. Take extreme care to prevent damage or scratching. Replace damaged components prior to installation. All workmanship must be top quality with neat miters and fitted joints.

3.6 FLASHING

A. Flashings: Flashings required between covered walkway system and adjoining structures are not work of this section. Refer to Division 07 Section "Sheet metal Flashing and Trim".

3.7 FIELD QUALITY CONTROL

A. Manufacturer's Field Service: Manufacturer's qualified technical representative shall inspect first day's Work and periodically inspect Work to ensure installation is proceeding in accordance with manufacturer's designs, recommendations, instructions, and warranty requirements. Representative shall submit written reports of each visit indicating observations, findings, and conclusions of inspection.

3.8 CLEANING AND PROTECTION

A. Damaged Units: Replace roof deck panels and other components of the work which have been damaged or have deteriorated beyond successful minor repair.

B. Cleaning: Remove protective coverings at time in project construction sequence which will afford greatest protection of work. Clean finished surfaces as recommended by manufacturer. Maintain in a clean condition during construction.

C. Protection: Advise Contractor of protection and surveillance procedures, as required to ensure that work of this section will be without damage or deterioration at time of substantial completion.

END OF SECTION

SECTION 11 2400

BUILDING MAINTENANCE EQUIPMENT

PART 1 - GENERAL

1.1 SUMMARY

A. Section Includes: Building maintenance equipment system and supplementary items necessary for installation.

1.2 DELEGATED ENGINEERING REQUIREMENTS

A. Contract Documents Design Intent: Drawings and Specifications indicate design intent for products and systems and do not necessarily indicate or specify total Work required. Contract Documents shall not be construed as an engineered design; furnish and install all Work required for a complete installation.

B. Delegated Engineering Responsibility: Contractor shall employ a qualified professional engineer to provide engineering for products and systems including attachment to building structure required to meet design intent of Contract Documents.

1. Preparation of structural analysis data including engineering calculations, shop drawings and other submittals signed and sealed by the qualified professional engineer.

C. Delegated Engineering Professional Qualifications: Professional engineer legally authorized to practice in jurisdiction where Project is located and experienced in providing engineering services of kind indicated for products and systems similar to this Project and has a record of successful in-service performance.

D. Coordination of Work:

1. Product Variations: In the event of minor differences between products and systems of acceptable or available manufacturers, Contractor shall notify Architect of such differences and resolve conflicts in a timely manner. Failure of Contractor to provide notification shall be construed as acceptance of conditions indicated, and changes caused by minor differences between products and Contract Documents shall be included in the Work at no additional cost to Owner.
2. Allowable Adjustments: Minor dimension and profile adjustments may be made in interest of fabrication or erection methods or techniques or ability to satisfy design intent, provided design intent is maintained as determined by Architect. Proposed deviations shall include a detailed analysis of impact to adjacent substrates or other building systems, including related design or construction cost impacts. If accepted by Architect, deviations causing changes in materials, constructability, substrates, or conditions shall be included in the Work at no additional cost to Owner.

1.3 ACTION SUBMITTALS

A. Product Data: Manufacturer/fabricator’s technical literature for each product and system indicated.

1. Include manufacturer/fabricator's specifications for materials, finishes, construction details, installation instructions, and recommendations for maintenance.

B. Shop Drawings: Show details of fabrication and installation, including plans, elevations, sections, details of components and attachments to other work. Distinguish between shop and field-assembled work.

1. Locate anchorages to suit maintenance equipment to be used on the Project. Considerations shall be made addressing such items as reach, rigging, spacing, roof edge condition, and other similar items.
2. Design anchor components to provide adequate attachment to the building structure that is suited to suspended maintenance industry practices and to ensure compatibility with equipment to be provided in this Project.

1.4 INFORMATIONAL SUBMITTALS

A. Delegated Engineering Calculations: Informational submittal for products indicated to comply with design loads, include structural analysis data signed and sealed by the qualified professional engineer responsible for their preparation; test reports are not acceptable substitute for calculations.

B. Product Test Reports: Written reports based on evaluation of comprehensive tests performed by qualified testing agency indicating that each product complies with requirements.

C. Field Quality Control Reports: Written report of testing and inspection required by "Field Quality Control".

D. Manufacturer/fabricator's Project Acceptance Document: Certification by the manufacturer/fabricator that its product(s) are approved, acceptable, suitable for use in specific locations, for specific details, and for applications indicated, specified, or required, and that a warranty will be issued.

E. Qualification Data:

1. For firms and persons specified in "Quality Assurance" to demonstrate their capabilities and experience. Include list of completed projects.
2. Evidence of required insurance coverage.
3. Written explanation of nature of any litigation resulting in failure of equipment.

F. Welding Certification: Welding certificates required by "Quality Assurance" Article. Include names of firms and personnel certified.

1.5 CLOSEOUT SUBMITTALS

A. Maintenance Data: To include in maintenance manuals.

1. Posted Record Drawings: Provide plastic laminate encased record roof plan at each point of access to roof indicating equipment locations and details.
2. Inspection Forms: Copy of Equipment Manual & Inspection Log Book including completed "Initial Inspection - Certification for Use" and "Inspection Sign-Off" forms.

1.6 QUALITY ASSURANCE

A. Manufacturer Qualifications: Manufacturer with not less than 10 years of experience in the successful production and in-service performance of products and systems similar to scope of this Project.

1. Insurance Coverage: Manufacturer/fabricator shall carry specific liability insurance (products and completed operations) in the amount of $10,000,000.00 to protect against product / system failure of building maintenance equipment.
2. Litigation Disclosure: If any, submit written explanation of nature of litigation resulting in failure of equipment.

B. Installer Qualifications:

1. Experience: Installer's personnel with not less than 10 years of experience in the successful performance of Work similar to scope of this Project.
2. Supervision: Installer shall maintain a competent supervisor at Project while the Work is in progress, and who has not less than 10 years of experience installing products and systems similar to scope of this Project.
3. Manufacturer/Fabricator Acceptance: Installer shall be certified, approved, licensed, or acceptable to manufacturer/fabricator to install products.

C. Welding Qualifications: Qualify procedures and personnel according to AWS qualification requirements and following:

1. AWS D1.1/D1.1M, "Structural Welding Code - Steel".
2. AWS D1.2/D1.2M, "Structural Welding Code - Aluminum".

1.7 PRE-INSTALLATION CONFERENCE

A. Pre-Installation Conference: Before Work begins, conduct conference at Project site.

1. Participants:

a. Architect.
b. Contractor, including superintendent.
c. Installer, including project manager and supervisor.
d. If requested, Manufacturer's qualified technical representative.
e. Installers of other construction interfaced with Work.

2. Minimum Agenda: Installer shall demonstrate understanding of the Work required by describing detailed procedures for preparing, installing, and cleaning the Work. Demonstration shall include, but not be limited to, following topics:

a. Tour representative areas of Work, inspect and discuss condition of substrate, and other preparatory work performed by other trades.
b. Review Contract Document requirements.
c. Review approved submittals.
d. Review inspection and testing requirements.
e. Review environmental conditions and procedures for coping with unfavorable conditions.
f. Resolve deviations or differences between Contract Documents and the manufacturer's specifications.

3. Record discussions, including decisions and agreements, and prepare report.

1.8 PROJECT CONDITIONS

A. Field Measurements: Where products and systems are indicated to fit walls and other construction, verify dimensions by field measurements before fabrication.

1.9 COORDINATION

A. Coordinate installation of products and systems with interfacing and adjoining construction to provide a successful installation without failure.

PART 2 - PRODUCTS

2.1 MANUFACTURER AND PRODUCTS

A. Acceptable Manufacturers and Products: Subject to compliance with requirements of Contract Documents as judged by the Architect, provide product by one of manufacturers listed. If not listed, submit as substitution according to the Conditions of the Contract and Division 01 Section "Substitution Procedures".

B. Available Manufacturers and Products: Subject to compliance with requirements of Contract Documents as judged by the Architect, manufacturers offering products that may be incorporated into the Work include, but are not limited to, those listed.

1. HighRise Systems, Inc.
2. Guardian Fall Protection.
3. Pro-Bel Enterprises, Ltd.
4. Rooftop Anchors, Inc.
5. Spider, a Division of SafeWorks, LLC.
6. Sky Rider Equipment Co., Inc.
7. Tractel Group, Swingstage Division.

2.2 MATERIALS, GENERAL

A. Single Source Responsibility: Furnish each type of product from single manufacturer/fabricator. Provide secondary materials only as recommended by manufacturer/fabricator of primary materials.

2.3 PERFORMANCE REQUIREMENTS

A. General Performance: Engineer products and systems to withstand loads within limits of allowable working stresses of the materials involved under conditions indicated and without permanent deformation or failure of materials.

B. Design Loads: Engineer to withstand design loads including but not limited to gravity, wind, seismic, and erection design loads and thermal movements established by authorities having jurisdiction, applicable local building codes, and as indicated. Contractor shall obtain required design data and identify movements accommodated on submittal drawings.

C. Delegated Engineering Quality Standards: Determine allowable working stresses of materials according to authorities having jurisdiction, applicable local building codes, or information indicated, or, if standard not indicated, use latest editions of following:

1. Structural Steel: AISC S342L with Supplement No. 1, "Load and Resistance Factor Design Specification for Structural Steel Buildings".
2. Aluminum: AA ADM-1.
3. Window Cleaning Safety: ANSI/IWCA I-14.1 and OSHA 1910, Subpart D.
4. Personal Fall Arrest: Appendix C to OSHA 1910 Subpart F.
5. Powered Platforms:

    a. OSHA 1910.66, Subpart F.
    b. ASME A120.1.

6. Electrical: NEC with UL listed devices.

D. Thermal Movements: Engineer products and systems to accommodate thermal movements of supporting elements resulting from the following maximum change (range) in ambient and surface temperatures without buckling, damaging stresses, damaging loads on fasteners, failure of operating units to function properly, and other detrimental effects.

1. Temperature Change (Range): 120 deg F (49 deg C), ambient; 180 deg F (82 deg C), material surfaces.

E. Dimensional Tolerances: Engineer products and systems to accommodate dimensional tolerances of framing members and adjacent construction.

1. Equipment Layout and Coordination: Locate anchorages to suit suspension equipment that will be used on building with respect to items such as reach, rigging, spacing, roof edge condition, and similar items. Coordinate components with architectural and structural concept expressed in Contract Documents. Changes to Contract Documents, including reinforcing and concrete materials and installation, necessitated by equipment shall be considered as a substitution.
2. Interface with Roof Coverings: Exposed portion of roof mounted components shall not be less than height indicated so that it is suitable for enclosure by sheet metal flashing.

2.4 MATERIALS

A. Metal Material Qualities: Metal used for components with not less than strength and durability properties required to fulfill performance requirements for components.

B. Steel Plates, Shapes, and Bars: ASTM A 36 / A 36M.

C. Steel Pipe: ASTM A 53 / A 53M.

D. Aluminum:

1. Extruded Bars, Tubes and Shapes: ASTM B 221 / B 221M.
2. Plate and Sheet: ASTM B 209 / B 209M.
3. Drawn Seamless Tubes: ASTM B 483 / B 483M.
4. Castings: ASTM B 26 / B 26M.

E. Stainless Steel:

1. Tubing: ASTM A 554, Grade MT 304.
2. Pipe: ASTM A 312 / A 312M, Grade TP 316.
3. Sheet, Strip, Plate, and Flat Bar: ASTM A 666, Type 316.
4. Bars and Shapes: ASTM A 276, Type 316.
5. Castings: ASTM A 743 / A 743M, Grade CF 8 or CF 20.
6. Wire Rope: ASTM A 492, Type 316 wire, stranded according to engineered design.

F. Welding Rods and Bare Electrodes: Selected according to AWS specifications for metal alloy to be welded.

2.5 FASTENERS

A. Fastener Materials: Stainless steel fasteners of type, grade, and class required to produce connections suitable for anchoring indicated items, including to other types of construction indicated.

B. Stainless Steel Wire-Rope Fittings: Connectors of types indicated, fabricated from stainless steel, and with capability to sustain, without failure, a load equal to minimum breaking strength of wire rope with which they are used.

2.6 COMPONENTS

A. Component Quality: Size, thicknesses, and materials with not less than strength and durability properties required by delegated engineering.

B. Davit Base:

1. Roof Mounted: Assembly composed of welded steel plates and steel pipe suitable for bolted or welded anchoring to building roof structure; capable of receiving and supporting davit arms and socket housing; galvanized after fabrication.
2. Wall Mounted: Assembly composed of welded steel plates and steel pipe suitable for bolted or welded anchoring to building wall or parapet; capable of receiving and supporting davit arms and socket housing; galvanized after fabrication.

C. Davits:

1. Arms: High profile type tall enough to allow platform to be swung over building parapet into working position and back.

    a. Assembly composed of treated structural aluminum sections of sufficient length and size equipped with carrying handles to allow movement to be accomplished by not more than 2 people.
    b. Capable of rotating 360 degrees.
    c. Permanently attached bearing assembly consisting of cast aluminum housing and bearing system transmitting bending and vertical load to socket housing.
    d. Separate mechanical safety cable mounted in davit between wire rope rigging point and davit bearing block.
    e. Rotation locks.

2. Socket Housing: Assembly composed of welded steel plates and hard rubber wheel suitable for moving from davit base to davit base; capable of receiving and supporting davit arms; galvanized after fabrication.

3. Data Plate: Permanent, non-corrosive plate clearly stating maximum service capacity and allowable number of users; prominently displayed at access points to system.

D. Safety Tiebacks:

1. Wall Mounted: Minimum 3/4 in (19 mm) diameter stainless steel bar, formed in minimum 1- 1/2 in (38 mm) U-shape eye opening, welded to stainless steel base plate suitable for bolted mounting indicated.
2. Roof Mounted: Minimum 3/4 in (19 mm) diameter stainless steel bar, formed in minimum 1-1/2 in (38 mm) U-shape eye opening, welded to stainless steel cap attached to galvanized steel pipe; field welded to either steel building structure, or steel embed plates in concrete.

E. Rigging Sleeves: Galvanized steel pipe, not less than 6 in (150 mm) inside diameter, with flanges for mounting indicated, with removable galvanized steel cap assembly tethered to pipe assembly.

F. Intermittent Stabilization Anchors:

1. Surface Mounted Buttons: Exposed stainless steel rod with button-like head with threaded anchoring device of size and configuration for attachment to building facade.
2. Recessed Mounted Detent Pins: Recessed stainless steel insert with outside end machined to receive detent pin and inside end with threaded anchoring device of size and configuration for attachment to building facade.

G. "Hands Free" Horizontal Cable Lifeline System: Assembly composed of following components:

1. Cable: Stainless steel wire with permanently swedged ends.
2. End Terminal: Stainless steel swedged termination at one end and stainless steel tensioner with shock absorber at other end.
3. Mounting Devices: Stainless steel shape as required by mounting conditions.
4. Cable Runner: Stainless steel device with automatic runner bypass for continuous "hands free" operation that can be inserted or removed anywhere on cable.
5. Data Plate: Permanent, non-corrosive plate clearly stating maximum service capacity and allowable number of users; prominently displayed at access points to system.
6. Harness: Manufacturer's standard "Hands-free" full body harness and lanyard complete with shock absorber.

H. Monorails: Horizontal with manual or electric traversing trolleys composed of following components:

1. Track: Extruded aluminum profile with end caps, splice devices, expansion connections and other items as required for complete assembly; clear anodized finish.
2. Mounting Brackets:

   a. Exposed: Standard or custom configuration.
   b. Concealed: Steel or aluminum of configuration required.

3. Manual Traversing Trolleys: Stainless steel or cadmium plated steel suspension assembly with 4 traversing and 2 guide molded polymer wheels on hardened steel bearings; including locking device, safety and primary suspension points, and other items as required for complete assembly.

4. Powered Traversing Trolleys: Stainless steel encased geared motor, connected to manual traversing trolleys, with pinion engaging chain within track; including primary brake, overspeed brake, limits, controls, overload switch, thermal overload protection device, and other items as required for complete assembly; voltage as indicated on Electrical Drawings.
5. Data Plate: Permanent, non-corrosive plate clearly stating maximum service capacity and allowable number of users; prominently displayed at access points to system.

I. Vertical Personnel Access:

1. Cage: Rigid assembly fabricated of structural aluminum and galvanized steel consisting of following characteristics and components:

   a. Nominal 30 in (750 mm) by 36 in (900 mm) plan dimensions.
   b. Gross load capacity of not less than 1,250 pounds (565 kg).
   c. Non-slip aluminum deck.
   d. Tubular aluminum guardrails 42 in (1050 mm) high, with access gate.
   e. Sheet aluminum toeboards around base of deck.
   f. Self-contained, load-sensitive traction hoist below deck for controlled ascent and descent; including primary brake, overspeed brake, limits, controls, overload switch, thermal overload protection device, and other items as required for complete assembly; travel speed not less than 25 ft (7.5 m) per minute; voltage as indicated on Electrical Drawings.

2. Cable: Stainless steel wire with permanently swedged ends.
3. Minimum Controls:

   a. Up and down operation buttons.
   b. Variable speed control.
   c. Emergency stop button.
   d. Power on indicator light.
   e. Meter that records operating time.
   f. Hand crank for emergency descent in case of power failure.

4. Remote Control: Same controls as on cage in lockable cabinets located as directed by Owner or Architect; separate controls for each cage.

J. Accessories: Stainless steel brackets, shims, clips, and other items as required for complete assemblies. Pins and fittings subject to removal secured by wire rope lanyards.

2.7 FABRICATION

A. Shop Assembly: Preassemble components in shop to greatest extent possible.

B. Cutting and Forming:

1. Cut, drill, and punch metals cleanly and accurately.
2. Remove burrs and ease edges to a radius of approximately 1/32 in (0.8 mm), unless otherwise indicated.
3. Remove sharp or rough areas on exposed surfaces.
4. Form bent-metal corners to smallest radius possible without causing grain separation or otherwise impairing Work.

5. Form exposed Work true to line and level with accurate angles and surfaces and straight edges.

C. Welding:

1. Weld continuously using materials and methods that minimize distortion and develop strength and corrosion resistance of base metals.
2. Obtain fusion without undercut or overlap.
3. Remove welding flux immediately.
4. At exposed connections, finish exposed welds and surfaces smooth and blended so no roughness shows after finishing and contour of welded surface matches that of adjacent surface.

D. Assembling:

1. Form exposed connections with hairline joints, flush and smooth, using concealed fasteners where possible.
2. Where exposed fasteners are required, use Phillips flat-head (countersunk) screws or bolts, unless otherwise indicated.
3. Fabricate seams and other connections that will be exposed to weather in a manner to exclude water; provide weep holes where water may accumulate.

2.8 FINISHES

A. Clear Anodized Aluminum Finish: AA-M12C22A41 (Mechanical Finish: as fabricated, nonspecular; Chemical Finish: etched, medium matte; Anodic Coating: Class I Architectural, clear film thicker than 0.7 mil) complying with AAMA 611, Class 1.

B. Galvanized Steel: After fabrication of component, apply zinc-coating by hot-dip process complying with following requirements:

1. ASTM A 153 / A 153M for galvanizing iron and steel hardware.
2. ASTM A 123 / A 123M for galvanizing both fabricated and unfabricated iron and steel products made of uncoated rolled, pressed, and forged shapes, plates, bars, and strip 0.0299 in (0.7 mm) thick and heavier.

PART 3 - EXECUTION

3.1 EXAMINATION

A. Acceptance of Surfaces and Conditions: Examine substrates to receive products and systems and associated work for compliance with requirements and other conditions affecting performance. Proceed only when unsatisfactory conditions have been corrected in a manner complying with Contract Documents. Starting work within a particular area will be construed as acceptance of surface conditions.

3.2 INSTALLATION, GENERAL

A. Installation Quality Standards: In addition to standards listed elsewhere, perform building maintenance equipment Work according to following, unless otherwise specified:

1. Respective manufacturer/fabricator's installation written instructions.

2. Accepted submittals.
3. Contract Documents.

3.3 PREPARATION

A. General: Comply with manufacturer/fabricator's instructions, recommendations, and specifications for cleaning and surface preparation. Surfaces shall have no defects, contaminants, or errors which would result in poor or potentially defective installation or would cause latent defects in Work.

3.4 INSTALLATION OF BUILDING MAINTENANCE EQUIPMENT

A. Install components in locations shown on shop drawings in plumb and true vertical and horizontal alignment.

3.5 FIELD QUALITY CONTROL

A. Manufacturer's Field Service: Manufacturer's qualified technical representative shall periodically inspect Work to ensure installation is proceeding in accordance with manufacturer's designs, recommendations, instructions, and warranty requirements. Representative shall submit written reports of each visit indicating observations, findings, and conclusions of inspection.

1. Manufacturer's Technical Representative Qualifications: Direct employee of technical services department of manufacturer with experience in providing recommendations, observations, evaluations, and problem diagnostics.

B. Load Testing: After installation, conduct full live load and operational tests under maximum design live loading conditions, according to ANSI/IWCA I-14.1. Operate over full range (horizontally and vertically) of building surfaces for which equipment was intended to maintain.

C. Repairs and Corrections: Correct component deficiencies to assure compliance. Retesting and/or reinspection failing to meet specified requirements shall be done at no additional cost to Owner.

3.6 DEMONSTRATION

A. Operational and Maintenance Training: Provide on-site instruction by factory-trained and certified technicians for Owner's personnel. Provide bound copies of training materials for each attendee.

END OF SECTION

SECTION 11 5213

PROJECTION SCREENS

PART 1 - GENERAL

1.1 SUMMARY

A. Perform work required to complete the projection screens indicated by the contract documents and furnish supplementary items necessary for their proper installation.

1.2 ACTION SUBMITTALS

A. Samples: Submit for approval samples of screen materials showing construction and finish specified.

B. Shop Drawings: Submit manufacturer's literature and mark sufficiently to indicate compliance with these specifications. Show locations, methods of supporting, methods of anchoring and finishes of each projection screen.

PART 2 - PRODUCTS

2.1 MANUFACTURERS

A. Acceptable Manufacturers: Subject to compliance with requirements of Contract Documents as judged by the Architect, provide product by one of manufacturers listed. If not listed, submit as substitution according to the Conditions of the Contract and Division 01 Section ‘‘Substitution Procedures’’.

1. Da-Lite Screen Company
2. Draper Inc.
3. Stewart Filmscreen Corporation

2.2 MATERIALS

A. Projection Screens (Electrically Operated): Da-Lite Screen Co., Inc., "Professional Electrol" Automatic Electric Projection Screen, size as indicated on the drawings.

1. Screen shall be electrically operated with a 120 volt AC (60 Hz) 2.4 amp, three (3) wire quick reversal motor, especially designed for the purpose. Motor shall be ball bearing type, and oiled for life, with automatic thermal overload cut-out and integral interlocking gears.
2. Screen operating system shall have pre-set but accessible limit switches to automatically stop screen fabric in the "up" and "down" positions. Stop action shall be positive, to prevent coasting.
3. System shall include a rigid metal roller at least 3 in (75 mm) diameter (to be used for screens 12' or less in width), or 5-3/4 in (142 mm) diameter (to be used on screens 14' to 18’ in width), or 7 in (175 mm) diameter (to be used on screens where either height or width exceeds 20’). Roller shall be mounted on two cast aluminum brackets equipped with self-aligning bearings.

4. Screen surface shall be flame retardant and mildew resistant, black masking borders, and with the following viewing surface:

    a. Matte white.

5. Case shall be of wood with double top for extra rigidity and sound deadening.
6. Case shall be finished with a primer coat, ready to accept final finish by others.
7. Heavy metal adjustable brackets shall be furnished for mounting screen as follows:

    a. Ceiling.
    b. Walls.
    c. Structure above ceiling.

8. System shall be complete with three (3) position control switch in box with cover plate.
9. The complete screen unit shall be "Listed by Underwriters' Laboratories, Inc.", and shall bear the re-examination markers of the Underwriters' Laboratories, Inc.

B. Projection Screens (Manually Operated): Da-Lite Screen Co., Inc. Model "Video B", manually operated spring roller type Screen, size(s) as indicated.

1. Case: Heavy gage octagon shape steel case with flat back design with baked enamel finish, fitted with heavy duty chrome case end caps concealing roller ends with integral bearing surface or steel inner caps to support roller.
2. Mounting Brackets: Plated steel brackets attached to end caps for wall mounting by means of slotted screw holes and ceiling mounted by means of plated steel hanger rings. Furnish heavy angle adjustable steel extension wall brackets.
3. Screen Fabric:

    a. Viewing surface shall be as follows with masking borders on flame retardant and mildew resistant fabric.

        1) Matte white.
        2) Glass-beaded.

    b. Bottom of fabric shall be mounted into a metal strip in a tubular steel slat finished in baked enamel. Ends of slat shall be protected by plastic caps.
    c. Fabric shall be mounted into a metal strip in a metal "camlok" roller system without tape, glue, staples or cords, so that fabric may be easily replaced yet, cannot be pulled from roller.

PART 3 - EXECUTION

3.1 INSTALLATION

A. Installation shall be as indicated on the Drawings.

B. Installation shall be in accordance with the manufacturer's latest published requirements, specifications and details.

END OF SECTION

SECTION 11 7000

MEDICAL EQUIPMENT

PART 1 - GENERAL

1.1 SUMMARY

A. Work of this Section includes related wall support, mechanical and electrical connections for medical equipment provided by Owner.

B. Medical equipment information at the end of this Section is for reference only.

1.2 ACTION SUBMITTALS

A. Product Data: Furnished by Owner.

B. Shop Drawings: Contractor shall furnish shop drawings of equipment installation when necessary to ensure coordination of the Work.

PART 2 - PRODUCTS

2.1 OWNER FURNISHED / OWNER INSTALLED EQUIPMENT

A. Products: Identified as "OFOI". Product is provided by Owner and installed by Owner.

B. Contractor Responsibilities: Limited to interface, surface preparations and utilities indicated on the Drawings or specified in the Specifications.

2.2 OWNER FURNISHED / CONTRACTOR INSTALLED EQUIPMENT

A. Products: Identified as "OFCI". Product is provided by Owner and installed by the Contractor.

B. Contractor Responsibilities: Provide labor, transportation, materials, tools, appliances and utilities necessary for the following:

1. Transportation of product from Owner's facility to the job site.
2. Receiving and storage of product.
3. Installation of product, complete and in operating condition, including adjusting and calibration of product as necessary for proper operation.
4. Testing of product.
5. Paying of fees, licenses, and taxes in conjunction with installation of the product.
6. Roughing-in and final utility connections for product remain the work of specification sections governing the specific utility.

2.3 CONTRACTOR FURNISHED / CONTRACTOR INSTALLED EQUIPMENT

A. Products: Identified as "CFCI". Product is provided by Contractor and installed by Contractor.

B. Contractor Responsibilities: Furnish equipment and installation as indicated in other specification sections.

2.4 OWNER FURNISHED / VENDOR INSTALLED EQUIPMENT

A. Products: Identified as "OFVI". Product provided by Owner, and installed by Owner's vendor.

B. Contractor Responsibilities: Limited to interface, surface preparations and utilities indicated on the Drawings or specified in the Specifications.

2.5 FUTURE EQUIPMENT

A. Products: Identified as "Future". Product provided by Owner and installed by others in the future.

B. Contractor Responsibilities: Limited to interface, surface preparations and utilities indicated on the Drawings or specified in the Specifications.

PART 3 - EXECUTION

3.1 EXAMINATION

A. For Contractor installed medical equipment, examine substrate surfaces to receive medical equipment and associated work and conditions under which work will be installed. Do not proceed until unsatisfactory conditions have been corrected in a manner acceptable to the Installer. Starting of work within a particular area will be construed as installer's acceptance of surface conditions.

3.2 PREPARATION

A. Coordinate work of this Section with related work of other Sections to obtain proper installation of items. Become acquainted with the work of other Sections whose work abut, adjoin or are in any way affected by or related to work under this Section.

B. Carefully examine the drawings and directions and be responsible for proper installation of materials and product without substantial changes.

C. Indication of pipe connection sizes on the plans shall in no way relieve Contractor of the responsibility of checking and verifying their sizes and locations from the actual product to be installed and any available roughing-in diagrams.

3.3 SCOPE OF WORK

A. Back-up Support: Provide wall reinforcing, backing and bracing for wall mounted equipment.

B. Concrete: Provide work indicated or required including, but not limited to, the following:

1. Housekeeping pads.
2. Trenches.
3. Anchor bolts.
4. Vibration isolation devices.
5. Core drilling.

6. Sleeves.

C. Heating, Ventilating, and Air Conditioning (HVAC): Provide work indicated or required including, but not limited to, exhaust ducts from connection point of equipment to building exhaust system.

D. Plumbing: Provide work indicated or required, including, but not limited to, the following:

1. Devices such as vacuum breakers, pressure reducing valves, shut-off valves, trim, traps, filters, etc.
2. Water, waste, gas, air, and steam connections to equipment.

E. Electrical: Provide work indicated or required including, but not limited to, the following:

1. Wiring and devices.
2. Power and lighting service.
3. Connections to equipment.

3.4 SCHEDULE OF MEDICAL EQUIPMENT

A. Refer to separately bound document.

END OF SECTION

AIA® Document G710™ – 2017

Architect's Supplemental Instructions

PROJECT: *(name and address)*
17-13 OSU College of Med. at Hastings
Tahlequah, OK

CONTRACT INFORMATION:
Contract For: General Construction
Date: 04-22-2019

ASI INFORMATION:
ASI Number: 006
Date: 02-06-2020

OWNER: *(name and address)*
Cherokee Nation Business
777 West Catoosa St
Catoosa, OK 74015

ARCHITECT: *(name and address)*
Childers Architect
45 South 4th Street
Fort Smith, AR 72901

CONTRACTOR: *(name and address)*
Cooper / Flintco

The Contractor shall carry out the Work in accordance with the following supplemental instructions without change in Contract Sum or Contract Time. Proceeding with the Work in accordance with these instructions indicates your acknowledgment that there will be no change in the Contract Sum or Contract Time.
(Insert a detailed description of the Architect's supplemental instructions and, if applicable, attach or reference specific exhibits.)
See attached updated Equpment book/List/Specs.

ISSUED BY THE ARCHITECT:

Childers Architect
ARCHITECT *(Firm name)*

Blake Mahar
SIGNATURE

Blake Mahar
PRINTED NAME AND TITLE

02-06-20
DATE

AIA Document G710™ – 2017. Copyright © 1979, 1992 and 2017 by The American Institute of Architects. **All rights reserved. WARNING: This AIA® Document is protected by U.S. Copyright Law and International Treaties. Unauthorized reproduction or distribution of this AIA® Document, or any portion of it, may result in severe civil and criminal penalties, and will be prosecuted to the maximum extent possible under the law.** This document was produced by AIA software at 14:54:45 ET on 02/06/2020 under Order No. 8222682963 which expires on 11/26/2020, and is not for resale.
User Notes: (3B9ADA4F)

ADDENDUM 3: ITEMS PERTAINING TO EQUIPMENT CHANGES SINCE ADDENDUM 1

PROJECT: OSU HEALTH SCIENCES CENTER, TAHLEQUAH

DATE: 09-18-2019

GROUP	EQUIP #	DESCRIPTION	NOTES
OPSVCI	**8404**	**Headwall; Infant Patient Service**	**This item GROUP identifier has been changed to CPSVCI ITEM** as reflected by other headwalls (8403C, 8403D, 8403E) being designed by Modular Services; meaning contractor is to procure & coordinate with manufacturer issues regarding production, delivery & installation.
			LOCATIONS FOR HEADWALLS
			RM# 1032 (8403C) SIMMULATION ROOM, MEDICAL SURGICAL
			RM# 1040 (8403C) SIMMULATION ROOM, EMERGENCY
			RM# 1055 (8403D) SIMMULATION ROOM, PEDIATRIC
			RM# 1047 (8403E) SIMMULATION ROOM, MATERNITY
			RM# 1047 (8403) SIMMULATION ROOM, MATERNITY
OPSVCI	**8407**	**Bed Locator**	**This item 8407, GROUP identifier has been changed to CPSVCI ITEM** as it is a part of the Headwall Package being designed by Modular Services; meaning contractor is to procure & coordinate with manufacturer issues regarding production, delivery & in
			LOCATIONS FOR BED LOCATORS
			RM# 1032 (8403C) SIMMULATION ROOM, MEDICAL SURGICAL
			RM# 1040 (8403C) SIMMULATION ROOM, EMERGENCY
			RM# 1055 (8403D) SIMMULATION ROOM, PEDIATRIC
			RM# 1047 (8403E) SIMMULATION ROOM, MATERNITY
			RM# 1047 (8403) SIMMULATION ROOM, MATERNITY
OPSVCI	**3156**	**Scrub Sinks (SIMM LAB AREA)**	**This item (3156) is now a CPCI ITEM AND IS FOUND IN THE ARCHITECTURAL DRAWINGS AS PER MEP**; THEREFORE IS NO LONGER REFLECTED WITHIN THE EQUIPMENT LIST.
OPSVCI	**3278**	**Scrub Sink Cadaver Storage (BASEMENT LEVEL)**	**This item 3278 now has a new GROUPING IDENTIFIER OPCI, per owner request**. This specialty scrub sink will be purchased by OWNER AND INSTALLED BY CONTRACTOR; QTY IS REFLECTED AS 2 WITHIN THE EQUIPMENT LIST
OPCI	**1422**	**Lecture Hall Tables**	**This item 1422 now has a new GROUPING IDENTIFIER OF CPCI** due to installation coordination efforts required. CONTRACTOR will procure, coordinate finishes & features with OWNER
OPCI	**1424C**	**Lecture Hall Tables**	**This item 1422 now has a new GROUPING IDENTIFIER OF CPCI** due to installation coordination efforts required. CONTRACTOR will procure, coordinate finishes & features with OWNER

ADDENDUM 1: ITEMS PERTAINING TO EQUIPMENT CHANGES SINCE 100% SUBMITTAL			
PROJECT: OSU HEALTH SCIENCES CENTER, TAHLEQUAH			
DATE: 09-09-2019			
GROUP	**EQUIP #**	**DESCRIPTION**	**NOTES**
CPCI	3352	Dishwasher, Automatic, Undercounter, Commercial Unit; See MEP	This item has been changed to **(#3352a)** a non commercial dishwasher with sanitizer cycle and is now a OPCI item.
			LOCATIONS FOR 3352a UNDERCOUNTER DISHWASHER
			RM# 1052 SOILED ROOM & LAUNDRY
			RM# 2045A WET AREA/CLINICAL EXAM STORAGE
			RM# 3022 KITCHENETTE, EXECUTIVE AREA
			RM# 3112 BREAKROOM, FACULTY
CPCI	1419	Table, Rectangular, On Casters, With Flip Top	This item GROUP tag has been changed **from CPCI TO OPVI**
OPSVI	4137	Television, Flat Panel, 46" WITH WALL MOUNT; OWNER TO SPECIFY DETAILS: REQUIRES BACKING	Owner has requested these TV monitors be larger, therefor potentially impacting backing requirements; the new Equipment # is 4133 which represents a 49" TV monitor;
			LOCATIONS FOR THE 4133: SIM LAB AREA
			RM# 1032 SIMMULATION ROOM, MEDICAL SURGICAL
			RM# 1040 SIMMULATION ROOM, EMERGENCY
			RM# 1046 OFFICE, SIM
			RM# 1047 SIMMULATION ROOM, MATERNITY
			RM# 1055 SIMMULATION ROOM, PEDIATRIC
OPOI	2270	Cabinet, Tall Storage; Heavy Duty; 4 Adj Shelves; OWNER TO FIELD MEASURE PRIOR TO ORDERING; 48"w x 24"d x 78"h	**RM# B003 NEURO ANATOMY LABE: ITEMS 2270, 2271, 2272 IS REPLACING MILLWORK**
	2271	Cabinet, Tall Storage; Heavy Duty; 4 Adj Shelves; OWNER TO FIELD MEASURE PRIOR TO ORDERING; 36"w x 24"d x 78"h	
	2272	Cabinet, Tall Storage; Heavy Duty; 4 Adj Shelves; OWNER TO FIELD MEASURE PRIOR TO ORDERING; 30"w x 30"d x 78"h	
CPCI	3133	Shelf, Stainless Steel, of appropriate length & depth, INTEGRATE INTO SCRUB SINK CONFIGURATION	THIS ITEM IS NOW IDENTIFIED AS A **OPSVCI** ITEM SINCE OWNER IS NOW COORDINATING SCRUB SINKS WITH THEIR RESOURCE
OPVI	3125	Rack, Coat, Size up to 10 hooks for staff coats, heavy back packs, bags, etc…REQUIRES GOOD BACKING!	THE EQUIPMENT **#3125** (OPVI ITEM) HAS BEEN REPLACED WITH **#3126** WHICH IS TO BE CPCI AND IS REFLECTED IN ARCHITECTURAL ELEVATIONS; THESE ARE LOCATED IN ALL SC STUDY & STUDENT STUDY ROOMS
OPSVI	3279	Cabinet, Overhead Stainless Steel with Doors: Details by Owner & Mortech Design	AS INSTRUCTED ITEM **3279 LOCATED IN B006 CADAVER STORAGE HAS BEEN DELETED** FROM THE EQUIPMENT LIST & HAS BEEN ARCHITECTURALLY SPECIFIED; THEREFORE A CPCI ITEM

Ref. approved shop drawings for further information

ADDENDUM 3 : 09-18-2019

LEGEND

REQ	SYM	DESCRIPTION
2	O	OXYGEN OUTLET, CHEMETRON 400 SERIES LATCH-KEY STYLE QUICK CONNECT
2	A	AIR OUTLET, CHEMETRON 400 SERIES LATCH-KEY STYLE QUICK CONNECT
2	V	VACUUM OUTLET, CHEMETRON 400 SERIES LATCH-KEY STYLE QUICK CONNECT
6	E7	DUPLEX RECEPT., 8300SGI IVORY, 20A, 125V, HG, NP, SAFETY-TYPE
8	E8	DUPLEX RECEPT., 8300SGR BROWN 20A, 125V, H.G., EP, SAFETY-TYPE
1	S5	LOW VOLTAGE MOM CONTACT SWITCH, 1P, 3 POS, CENTER OFF, IVORY
1	NC	NURSE CALL PROVISION THREE GANG OPENING W/BLANK FACEPLATE
1	CB	CODE BLUE PROVISION SINGLE GANG OPENING W/BLANK FACEPLATE
4	DP	DATA PROVISION
1	BD	BED DOCKER (4)
4	VTF	VERTICAL EQUIPMENT MOUNTING TRACK, FASCIA
1	COL40	CLARITY OVERBED LIGHT, 4', MODEL MDL-C4LV22-T8 (4)
3	SW	513-1400 BASKET WITH SWIVEL BRACKET 10" X 10" X 4", TRACK MOUNT

QTY	ACCESSORIES NOT SHOWN (PER UNIT)
2	520-2700 VACUUM BOTTLE SLIDE, STRAIGHT POST MOUNT
2	511-1000 VERTICAL TRACK ADAPTOR
2	524-3371 OXYGEN FLOW METER LATCH KEY STYLE QUICK CONNECT
2	526-3769 AIR FLOW METER LATCH KEY STYLE QUICK CONNECT
2	224-2956 OHMEDA 3-MODE CONT. SUCT. REG. LATCH KEY STYLE QUICK CONNECT

NOTES:

1. COLOR TO MATCH FORMICA #923 'SURF'.
2. GAS OUTLETS TO BE MSC STANDARD BRAND OUTLET WITH CONNECTION TO MATCH EXISTING HOSPITAL EQUIPMENT
3. SERVICES REVERSED ON OPPOSITE HAND UNITS.
4. BED DOCKER AND CLARITY LIGHT PRICED SEPARATELY.

MODULAR SERVICES COMPANY
500 EAST BRITTON ROAD
OKLAHOMA CITY, OK 73114

PROJECT
OSU AT CHEROKEE NATION
TALEQUAH, OK
PEDIATRICS

REVISED
04/13/19
04/23/19
04/29/19
05/28/19

SURFACE MOUNT PROFILE® UNIT
MODEL 7112-S

SCALE: =1'

DATE	DRAWN BY	DRAWING #
04/01/19	ALF	PR-34792

1 REQ'D: __ AS SHOWN __ OPPOSITE

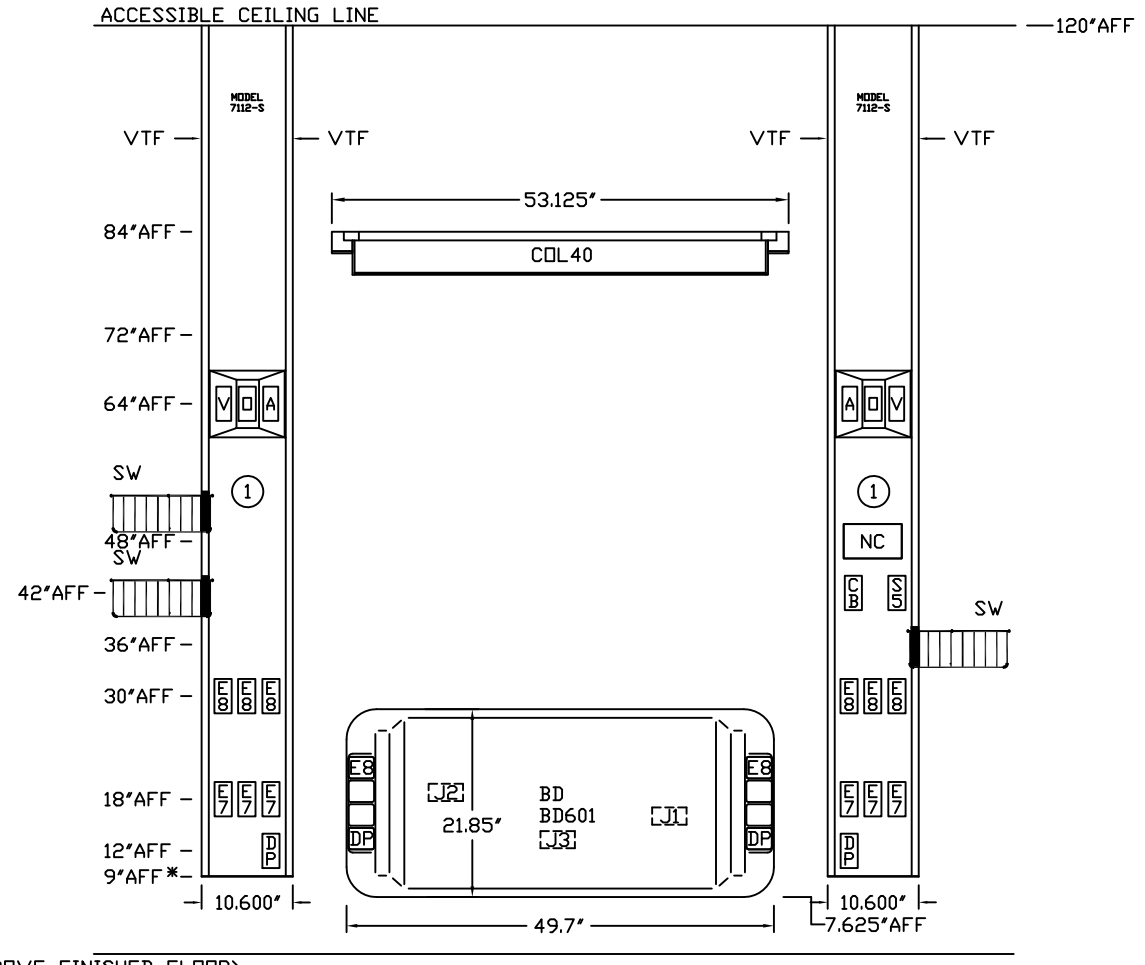

Ref. approved shop drawings for further information

ADDENDUM 3 : 09-18-2019

LEGEND

REQ	SYM	DESCRIPTION
2	O	OXYGEN OUTLET, CHEMETRON 400 SERIES LATCH-KEY STYLE QUICK CONNECT
2	A	AIR OUTLET, CHEMETRON 400 SERIES LATCH-KEY STYLE QUICK CONNECT
2	V	VACUUM OUTLET, CHEMETRON 400 SERIES LATCH-KEY STYLE QUICK CONNECT
2	SL	VACUUM BOTTLE SLIDE
2	E2	DUPLEX RECEPTACLE, 8300 IVORY, 20A, 125V, H.G., NORMAL POWER
10	E8	DUPLEX RECEPTACLE, 8300 BROWN, 20A, 125V, H.G., EMER. POWER
1	S1	LIGHT SWITCH, 1P, 15A, 125/277V, IVORY TOGGLE HANDLE
1	NC	NURSE CALL PROVISION
1	CB	CODE BLUE PROVISION
1	TV	TELEVISION OUTLET PROVISION
6	DP	DATA OUTLET PROVISION
3	FP	FUTURE PROVISION
2	SP	SCONCE LIGHT PROVISION (LIGHT BY OTHERS - NIGHT OWL 3
1	IB	INTERNAL BRACING ONLY
1	BD	BED DOCKER ⑦
4	AS	ADJUSTABLE SHELF

QTY	ACCESSORIES NOT SHOWN (PER UNIT)
2	524-3371 OXYGEN FLOW METER LATCH KEY STYLE QUICK CONNECT
2	526-3769 AIR FLOW METER LATCH KEY STYLE QUICK CONNECT
2	224-2956 OHMEDA 3-MODE CONT. SUCT. REG. LATCH KEY STYLE QUICK CONNECT

① GAS OUTLETS TO BE MSC STANDARD BRAND WITH CONNECTION TO MATCH EXISTING HOSPITAL EQUIPMENT.
② DEVICE MOUNTING PANELS; 3D LAMINATE SELECTION TO BE DETERMINED. WOOD GRAIN TO BE IN A VERTICAL ORIENTATION.
③ HORIZONTAL CHANNELS TO BE ANODIZED ALUMINUM AND DEVICE COVER PLATES TO BE STAINLESS STEEL.
④ THIS UNIT IS SURFACE MOUNTED.
⑤ INSET SURFACE PROVIDED FOR BASE MATERIAL (BY OTHERS).
⑥ CABINET HARDWARE TO BE MSC STANDARD BRAND.
⑦ BED DOCKER PRICED SEPARATELY.

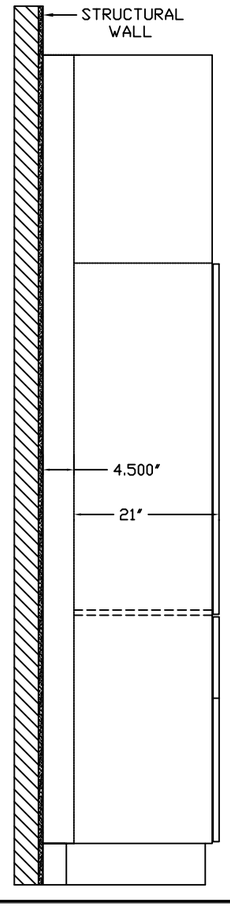

1 REQ'D: __AS SHOWN
__OPPOSITE

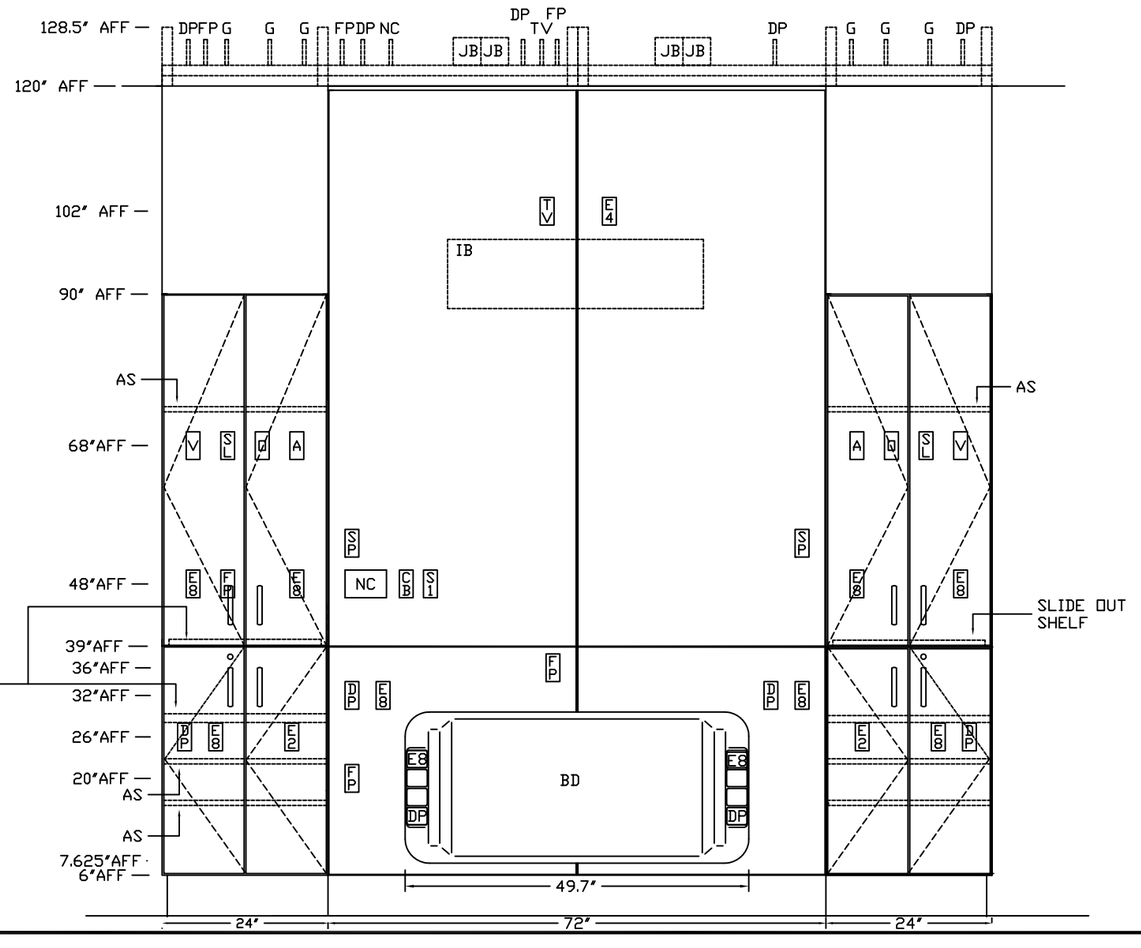

MODULAR SERVICES COMPANY 500 E. BRITTON ROAD OKLAHOMA CITY, OK. 73114

PROJECT
OSU AT CHEROKEE NATION
TALEQUAH, OK
MATERNITY

REVISED
04/13/19
04/23/19
04/29/19
05/28/19
08/15/19
08/29/19

FORM® HEADWALL SURFACE MOUNT

SCALE: =1'

DATE	DRAWN BY	DRAWING #
04/01/19	ALF	PR-34793

Ref. approved shop drawings for further information

ADDENDUM 3 : 09-18-2019

LEGEND

REQ	SYM	DESCRIPTION
2	O	OXYGEN OUTLET, CHEMETRON 400 SERIES LATCH-KEY STYLE QUICK CONNECT
2	A	AIR OUTLET, CHEMETRON 400 SERIES LATCH-KEY STYLE QUICK CONNECT
2	V	VACUUM OUTLET, CHEMETRON 400 SERIES LATCH-KEY STYLE QUICK CONNECT
3	E2	DUPLEX RECEPTACLE, 8300 IVORY, 20A, 125V, H.G., NORMAL POWER
5	E8	DUPLEX RECEPTACLE, 8300 BROWN 20A, 125V, H.G., EMER. POWER
1	S5	LOW VOLTAGE MOM CONTACT SWITCH, 1P, 3 POS, CENTER OFF, IVORY
4	DP	DATA PROVISION
1	NC	NURSE CALL PROVISION
1	CB	CODE BLUE PROVISION
2	HC	HORIZONTAL ACCESSORY CHANNEL
1	BD	BED DOCKER ②
1	COL40	CLARITY OVERBED LIGHT, 4', MODEL MDL-C4LV22-T8 ②
2	SB	513-1432 STORAGE BASKET, 14"W X 5.5"D X 7"H, CHANNEL MOUNT

QTY	ACCESSORIES NOT SHOWN (PER UNIT)
2	520-2703 VACUUM BOTTLE SLIDE, CHANNEL MOUNT
2	524-3371 OXYGEN FLOW METER LATCH KEY STYLE QUICK CONNECT
2	526-3769 AIR FLOW METER LATCH KEY STYLE QUICK CONNECT
2	224-2956 OHMEDA 3-MODE CONT. SUCT. REG. LATCH KEY STYLE QUICK CONNECT

NOTE:

① GAS OUTLETS TO BE MSC STANDARD BRAND OUTLET WITH CONNECTION TO MATCH EXISTING HOSPITAL EQUIPMENT

② BED DOCKER AND CLARITY LIGHT PRICED SEPARATELY.

MODULAR SERVICES COMPANY 500 EAST BRITTON ROAD OKLAHOMA CITY, OK 73114

PROJECT

OSU AT CHEROKEE NATION
TALEQUAH, OK
MED SURG

REVISED
04/13/19
04/23/19
04/29/19

PROVIDER PLUS®
DESIGNER SYSTEM
MODEL 6500-PC

SCALE: =1'

DATE	DRAWN BY	DRAWING #
04/01/19	ALF	PR-34794

NOTE: THIS APPLICATION IS NOT SUITABLE FOR EXISTING, INACCESSIBLE WALLS. PLEASE CONTACT YOUR SALES REPRESENTATIVE FOR AN ALTERNATE PROPOSAL.

1 REQ'D: __AS SHOWN
__OPPOSITE

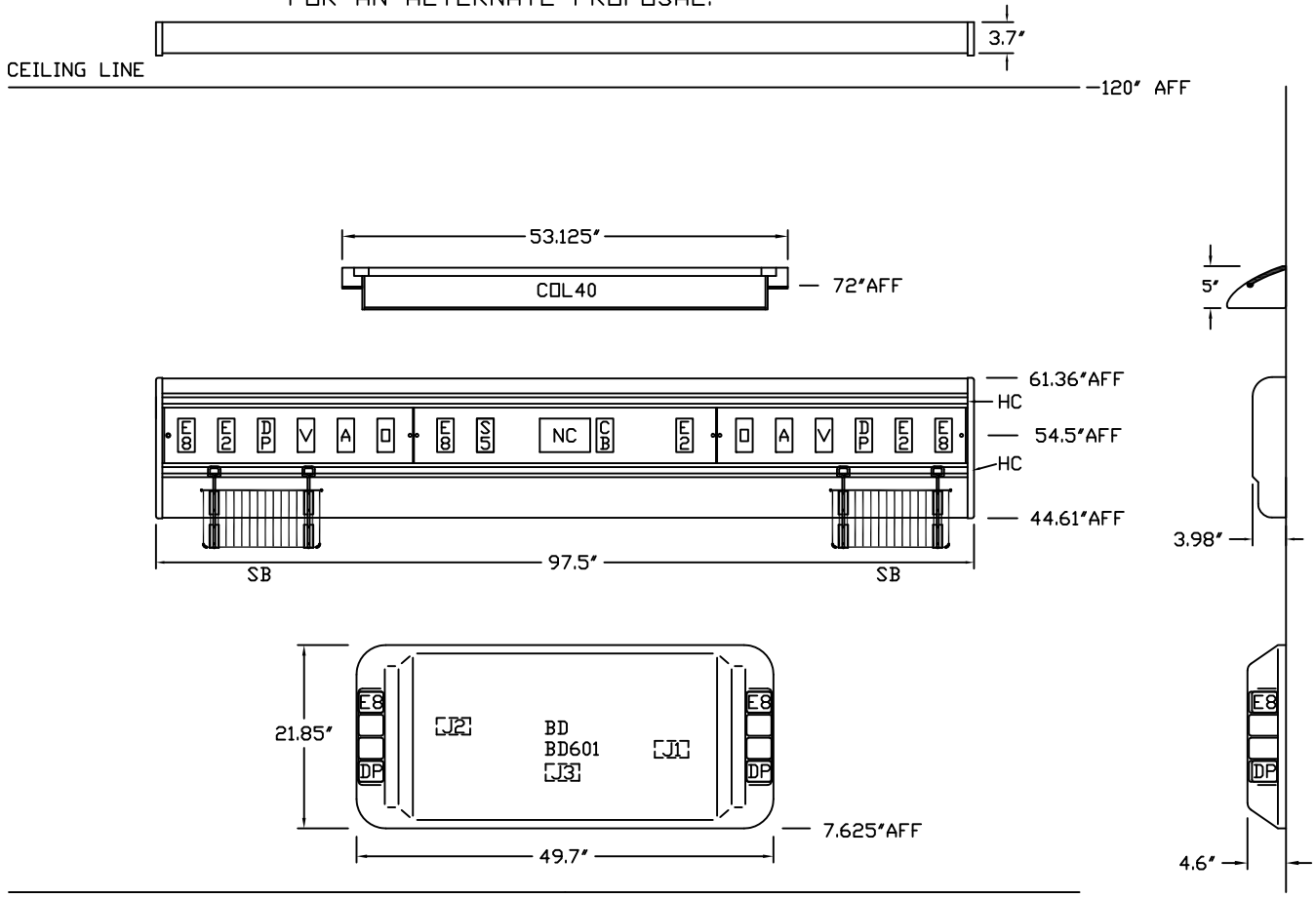

Ref. approved shop drawings for further information

ADDENDUM 3 : 09-18-2019

LEGEND

REQ	SYM	DESCRIPTION
2	O	OXYGEN OUTLET, CHEMETRON 400 SERIES LATCH-KEY STYLE QUICK CONNECT
2	A	AIR OUTLET, CHEMETRON 400 SERIES LATCH-KEY STYLE QUICK CONNECT
2	V	VACUUM OUTLET, CHEMETRON 400 SERIES LATCH-KEY STYLE QUICK CONNECT
2	E2	DUPLEX RECEPTACLE, 8300 IVORY, 20A, 125V, H.G., NORMAL POWER
4	E8	DUPLEX RECEPTACLE, 8300 BROWN 20A, 125V, H.G., EMER. POWER
4	DP	DATA PROVISION
1	S5	LOW VOLTAGE MOM CONTACT SWITCH, 1P, 3 POS, CENTER OFF, IVORY
1	NC	NURSE CALL PROVISION
1	CB	CODE BLUE PROVISION
2	HC	HORIZONTAL ACCESSORY CHANNEL
1	BD	BED DOCKER ②
1	COL40	CLARITY OVERBED LIGHT, 4', MODEL MDL-C4LV22-T8 ②
1	SB	513-1432 STORAGE BASKET, 14"W X 5.5"D X 7"H, CHANNEL MOUNT

QTY	ACCESSORIES NOT SHOWN (PER UNIT)
2	520-2703 VACUUM BOTTLE SLIDE, CHANNEL MOUNT
2	524-3371 OXYGEN FLOW METER LATCH KEY STYLE QUICK CONNECT
2	526-3769 AIR FLOW METER LATCH KEY STYLE QUICK CONNECT
2	224-2956 OHMEDA 3-MODE CONT. SUCT. REG. LATCH KEY STYLE QUICK CONNECT

NOTE:

① GAS OUTLETS TO BE MSC STANDARD BRAND OUTLET WITH CONNECTION TO MATCH EXISTING HOSPITAL EQUIPMENT

② BED DOCKER AND CLARITY LIGHT PRICED SEPARATELY.

MODULAR SERVICES COMPANY 500 EAST BRITTON ROAD OKLAHOMA CITY, OK 73114

PROJECT

OSU AT CHEROKEE NATION
TALEQUAH, OK
ER

REVISED
04/13/19
04/23/19
04/29/19

PROVIDER PLUS®
DESIGNER SYSTEM
MODEL 6500-PC

SCALE: =1'

DATE	DRAWN BY	DRAWING #
04/01/19	ALF	PR-34795

NOTE: THIS APPLICATION IS NOT SUITABLE FOR EXISTING, INACCESSIBLE WALLS. PLEASE CONTACT YOUR SALES REPRESENTATIVE FOR AN ALTERNATE PROPOSAL.

2 REQ'D: __AS SHOWN
__OPPOSITE

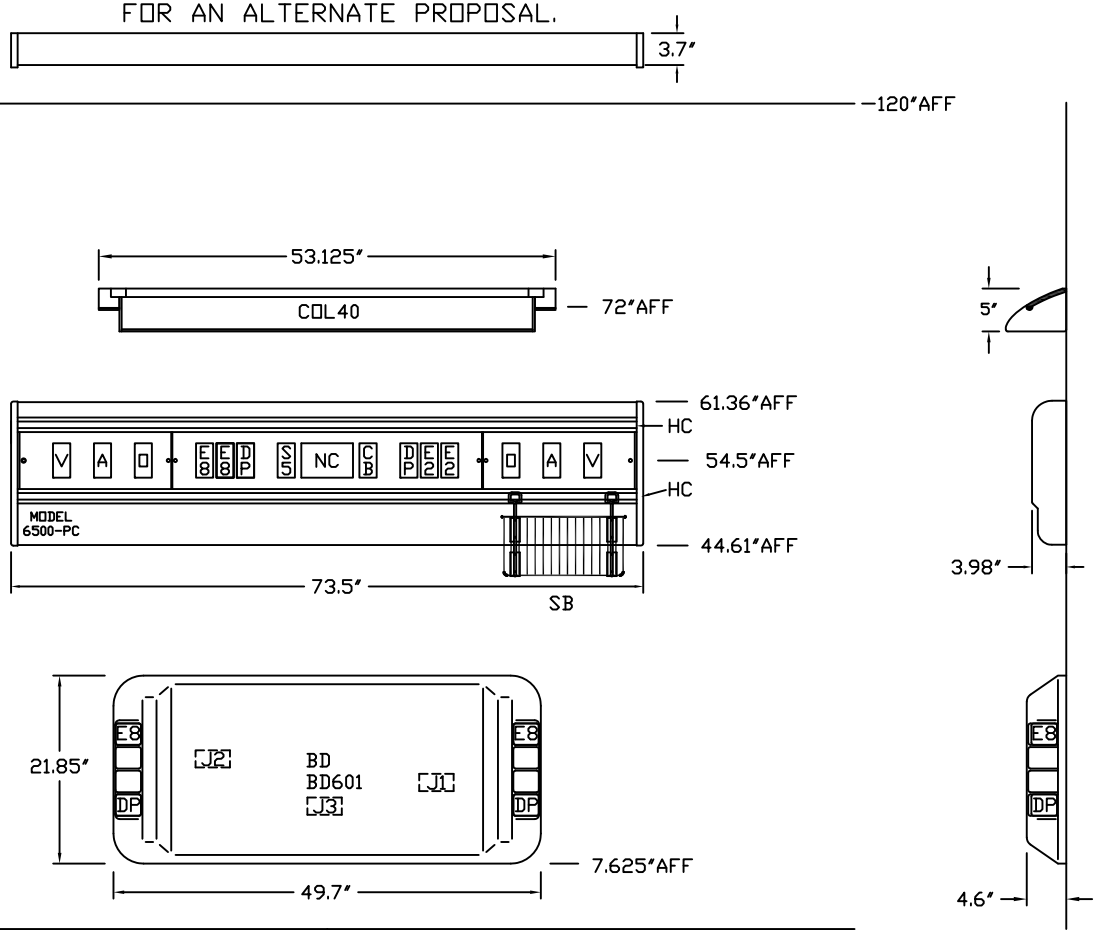

Ref. approved shop drawings for further information

ADDENDUM 3 : 09-18-2019

LEGEND

REQ	SYM	DESCRIPTION
2	O	OXYGEN OUTLET, CHEMETRON 400 SERIES LATCH-KEY STYLE QUICK CONNECT
1	A	AIR OUTLET, CHEMETRON 400 SERIES LATCH-KEY STYLE QUICK CONNECT
1	V	VACUUM OUTLET, CHEMETRON 400 SERIES LATCH-KEY STYLE QUICK CONNECT
1	FSL	FLIP DOWN VACUUM BOTTLE SLIDE
2	OS	524-3365 OXY. SWIVEL ASSEMBLY ONLY NO FLOWMETER, CHEMETRON
1	AS	526-3764 AIR SWIVEL ASSEMBLY ONLY NO FLOWMETER, CHEMETRON
1	VS	522-2949 VAC. SWIVEL ASSEMBLY ONLY NO REGULATOR, CHEMETRON
1	E2	DUPLEX RECEPTACLE, 8300 IVORY, 20A, 125V, H.G., NORMAL POWER
4	E8	DUPLEX RECEPTACLE, 8300 BROWN 20A, 125V, H.G., EMER. POWER
3	DP	DATA PROVISION
1	NC	NURSE CALL PROVISION
1	CB	CODE BLUE PROVISION

QTY	ACCESSORIES SHOWN (PER UNIT)
2	3-5/8" x 90" METAL STUDS

NOTES:

1. SERVICES TO BE REVERSED ON OPPOSITE HAND UNITS.
2. ALL UNITS ARE TO BE BUILT FOR MOUNTING INTO 3-5/8" METAL STUD WALLS WITH 5/8" DRYWALL.
3. PICTURE FRAME IS SHOWN IN UP POSITION. FRAME SLIDES DOWN AND TO THE SIDE TO CONCEAL GAS SERVICES.
4. CONSOLES ARE NOT PRE-WIRED. CONSOLES TO TO HAVE KNOCKOUTS IN THE TOP OF THE BACK BOX FOR CONDUIT CONNECTION (BY OTHERS).

MODULAR SERVICES COMPANY
500 EAST BRITTON ROAD
OKLAHOMA CITY, OK 73114

PROJECT: OSU AT CHEROKEE NATION
TALEQUAH, OK
MATERNITY

REVISED

ARTWORKS® WALL SYSTEM
3 GAS ONE SIDED, RECESSED
MODEL 6813-R (SP)

SCALE: =1'

DATE	DRAWN BY	DRAWING #
08/29/19	JRS	PR-35298

NOT FOR CONSTRUCTION
CONCEPTUAL ONLY

1 REQ'D: 1 AS SHOWN
0 OPPOSITE

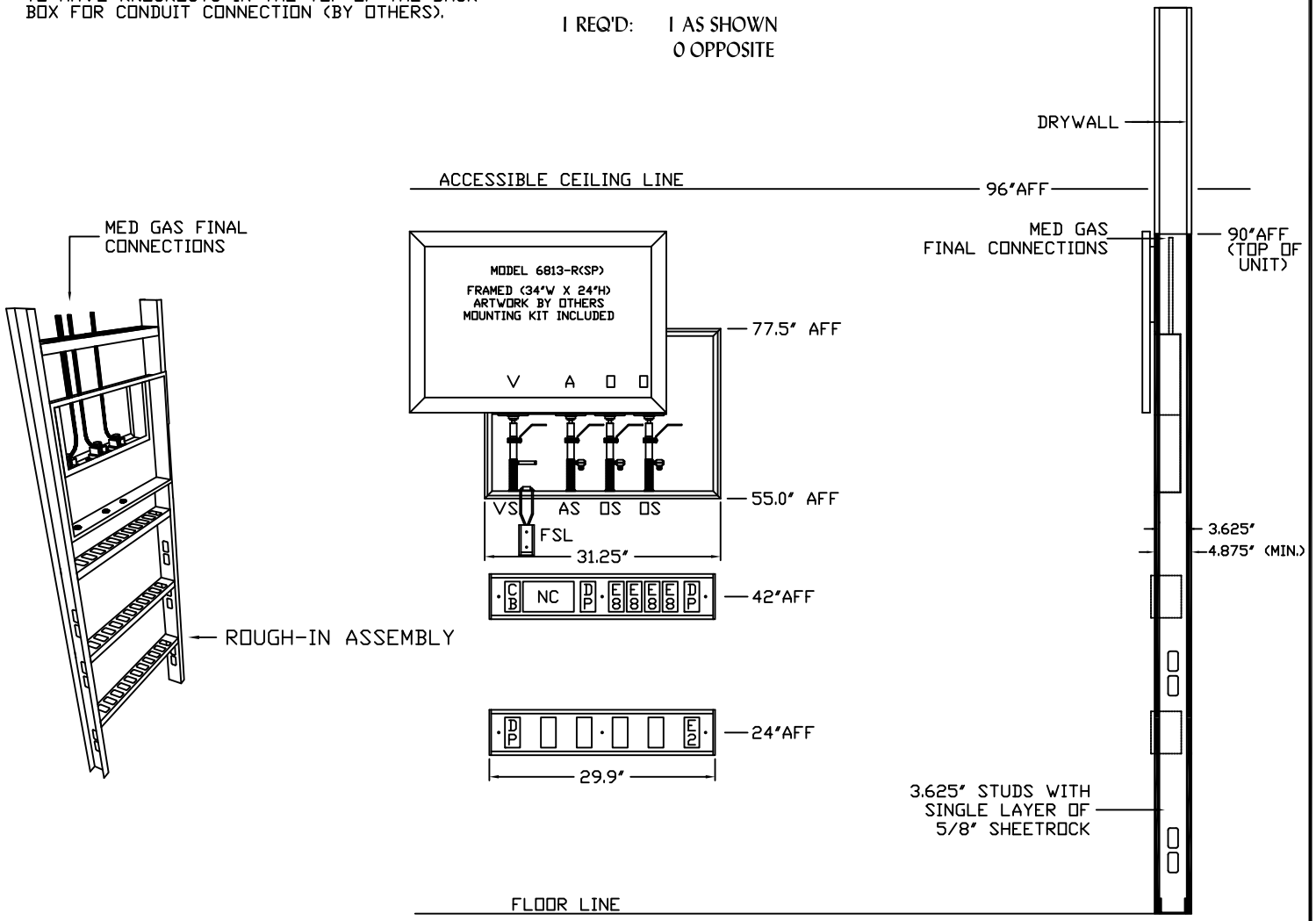

EQUIPMENT PLAN

OSU CENTER FOR HEALTH SCIENCES

January 31, 2020

Prepared by:
Interior Logistics

Interior Logistics

CPCI = CONTRACTOR PROVIDED-CONTRACTOR INSTALLED

OPCI = OWNER PROCURED-CONTRACTOR INSTALLED

OPVI = OWNER PROCURED-VENDOR INSTALLED

OPOI= OWNER PROCURED-OWNER INSTALLED

OPVICI = OWNER PROCURED-VENDOR & CONTRACTOR INSTALLED

OPSVI = OWNER PROCURED-SPECIALTY VENDOR INSTALLED

OPSVCI = OWNER PROCURED-SPECIALTY VENDOR & CONTRACTOR INSTALLED

PROPOSED EQUIPMENT PLANNING DOCUMENT

Interior Logistics

OSU CENTER FOR HEALTH SCIENCES

CHEROKEE NATION

January 31, 2020

Prepared by: Interior Logistics

DEPARTMENT #	DEPARTMENT TITLE	PAGE #'S
00	BASEMENT LEVEL: ANATOMY & SUPPORT SPACE	2-15
03	LEVEL ONE:LECTURE HALL 1;SIM LAB-STUDY-GYM-COMMUNITY AREAS	16-53
05	LEVEL TWO: STUDENT STUDY, LIBRARY & COMMUNITY AREAS	54-99
08	LEVEL THREE:ADMIN-FACULTY-STAFF OFFICES, SUPPORT & MTG SPACE	100-148

OSU-CNH TAHLEQUAH HEALTH SCIENCES CENTER: EQUIPMENT PLANNING

DEPT TITLE **BASEMENT LEVEL: ANATOMY & SUPPORT SPACE**

ARCH ROOM NO **B001**

ROOM TITLE **BASEMENT LOCKERS, LOBBY & CIRCULATION**

GROUP	EQNO	QTY	DESCRIPTION	LOCATION	SIZE-STD	UTILITIES
CPCI	1054	1	Clock System, Synchronized; Analogue, With Second Hand; Sized Appropriate for Space; Control System	wall	VARIES	E; Low Voltage
OPVI	3043	3	Wastebasket, Stainless Steel, Half Moon Shape 12 gal; Open Top; Perforated Panel	floor	18"w x32"hx12"D	None
OPOI	4129	1	Monitor, Digital Directory; REQUIRES BACKING; Size & Details by Owner I.T./3RD Party Vendor	wall mount	TBD	E 115V; Data-Com
OPOI	8202	1	Defibrillator, External, Automated (AED) With Accessories	Stored	16"w x 14.75"h x8.5"d	None
CPCI	8202a	1	Cabinet, SEMI Recessed AED; Stainless Steel battery alarm/safety clasp/optional custom logo	recessed wall	wall opening 15.25"w x15.25"h x3.75"d	None

ARCH ROOM NO **B003**

ROOM TITLE **LAB, NEURO ANATOMY**

GROUP	EQNO	QTY	DESCRIPTION	LOCATION	SIZE-STD	UTILITIES
CPCI	1054	2	Clock System, Synchronized; Analogue, With Second Hand; Sized Appropriate for Space; Control System	wall	VARIES	E; Low Voltage
OPVI	1340	51	Task Chair; Soft Casters for Hard Flooring, VINYL Upholstery, SITTING Height	floor	18"w x 19"d x 17.5 x23.25"h	None
OPVI	1400a	26	Table, Work, Adjustable Height; TRAPEZOID-HON	floor	24”D X 48”W X 25” – 35”H	None
OPOI	2270	2	Cabinet, Tall Storage; Heavy Duty; 4 Adj Shelves; OWNER TO FIELD MEASURE PRIOR TO ORDERING	floor	48"w x 24"d x 78"h	None
OPOI	2271	3	Cabinet, Tall Storage; Heavy Duty; 4 Adj Shelves; OWNER TO FIELD MEASURE PRIOR TO ORDERING	floor	36"w x 24"d x 78"h	None
OPOI	2272	1	Cabinet, Tall Storage; Heavy Duty; 4 Adj Shelves; OWNER TO FIELD MEASURE PRIOR TO ORDERING	floor	30"w x 30"d x 78"h	None
OPOI	2401	2	Cart, Utility; 3 Shelf; Mobile; Handles on Both Ends	floor	34"l x 19"d x 38"	None
CPCI	2505	1	Board, Bulletin, Rubber Tack, Aluminum Frame	wall	48"w x 48"h x2"d	None
CPCI	2518	12	Board, Marker, Magnetic Cleanable Surface,w/Tray, 48" x 48" x 1"d	wall	48"w x48"h x1"d	None
OPOI	2540	1	Anatomy Educational Models As Required to meet needs of classroom; Type & Qty TBD	stored	Varies	None

OPOI	2944	1	Telephone, Wall Mounted: TO BE SPECIFIED BY OWNER	wall	8x3X10	Comm.
OPVI	3040b	4	Wastebasket, END Step-On,Plastic,Rectangular, 24 gallon, Colors: SS with Black Trim	floor	22.5"w x 12.5"d x 28.75"h	None
OPOI	3100	5	Dispenser, Paper Towel: TYPE TBD ? BY OWNER-CURRENT JANITORIAL SERVICE	wall mount	TBD	None
OPOI	3103	5	Dispenser, Soap; Automatic	wall	7"w x5"d x10.25"h	None; Battery Operated
OPOI	3907	2	Computer With Dual Monitor, Wireless Keyboard & Mouse; TO BE SPECIFIED BY OWNER	desk top	TBD	E 115V; Data
OPOI	4103	1	Podium, Cabinet, Audio/Visual, Portable, For Up TO 2 PC & DUAL MONITOR; SPECS BY I.T. DEPT/3RD	floor	TBD By Design	E 115V Quad; 2 Data/?Com
OPOI	4106	1	Camera, Digital For Use in Labs: TO BE SPECIFIED BY OWNER I.T. DEPT	stored	n/a	None
OPOI	4108	1	Camera, Document for Classrooms: SPECS BY OWNER I.T. DEPT	Sits on 4103	11.7"w x19"d x18.8"h	E 115V, Data
OPOI	4131	4	Television Monitor, Flat Panel, 65"; Wall Mount; REQ BACKING: DETAILS BY I.T. & 3RD PARTY VENDOR	wall/ceiling mt	57.6"w x 2.5"d x 33.2"h	E 115V; Data
OPOI	4136	8	Television-Monitor, High Resolution Flat Panel, 55", WaMount; REQUIRES BACKING: SPEC BY OWNER	wall or ceiling	49.2"w x 29"h x 3.1"d	E 115V; Cabling; Data
OPOI	4228	1	First Aid Kit, Wall Mounted; SPECIFICATIONS BY OSU SAFETY DEPARTMENT: REQUIRES BACKING	wall mount	Typical 7" w x 7.5" h x 3" d	None
OPOI	4229	1	SDS Folder/Manual & Wall Rack; SPECIFICATIONS BY OSU SAFETY DEPARTMENT: REQUIRES BACKING	wall mount	Typical 20"w x14"h x 4"d	None
OPOI	9240	1	Stool, Kik Step, 350# Capacity, Available in Silver, Gray, Black	floor	16" DIAMETER X 14"H	None

ARCH ROOM NO **B004**

ROOM TITLE **OFFICE, FACULTY; ANATOMY LAB**

GROUP	EQNO	QTY	DESCRIPTION	LOCATION	SIZE-STD	UTILITIES
OPVI	0150b	1	Chair, Rotary,Std Mesh Back,5-Legged, SOFT CASTERS-HARD FLOORING , Ergonomic,Adj Arms,	floor	28.25"W 25.25"D 42.25”-47”H	None
OPVI	0200b	1	Chair, Desk Side Chair; SOFT GLIDES FOR HARD FLOORING: Upholstery: Stinson, Fuse, Tangelo	floor	25.25"W 22.25'1'D 33"H	None
OPVI	0700	2	Bookcase/Lateral file combination unit; High Pressure Laminate: Columbian Walnut?	floor	36"w x20"d x68"h	none
OPVI	1500	1	Workstation, Furniture System, Upper & Lower Storage: Laminate-Columbian Walnut; Fabric-Mandarian	floor	Various	E 115V Quads: Data-Comm

OPOI	2941	1	Telephone, Standard Desk: TO BE SPECIFIED BY OWNER	desktop	10"D X 8"W X 4"H	Data-Com
OPVI	3039a	1	Wastebasket, Rectangular, plastic, water/fire resistant,28qt	floor	14lx11wx16h	None
CPCI	3115	1	Robe Hook, Double	wall	6x6x3	None
OPOI	3907	1	Computer With Dual Monitor, Wireless Keyboard & Mouse; TO BE SPECIFIED BY OWNER	desk top	TBD	E 115V; Data

ARCH ROOM NO **B005**

ROOM TITLE **PREP ROOM, NEURO ANATOMY**

GROUP	EQNO	QTY	DESCRIPTION	LOCATION	SIZE-STD	UTILITIES
CPCI	1054	1	Clock System, Synchronized; Analogue, With Second Hand; Sized Appropriate for Space; Control System	wall	VARIES	E; Low Voltage
OPVI	3040b	1	Wastebasket, END Step-On,Plastic,Rectangular, 24 gallon, Colors: SS with Black Trim	floor	22.5"w x 12.5"d x 28.75"h	None
OPOI	3088a	2	Container, Sharps: Countertop; 1 GALLON; Drop In Top: VERIFY OWNER SOURCE	Countertop	7"D x10.25"W x6"H	None
OPOI	3100	1	Dispenser, Paper Towel: TYPE TBD ? BY OWNER-CURRENT JANITORIAL SERVICE	wall mount	TBD	None
OPOI	3103	1	Dispenser, Soap; Automatic	wall	7"w x5"d x10.25"h	None; Battery Operated
CPCI	3115	1	Robe Hook, Double	wall	6x6x3	None
OPVI	3269a	1	Refrigerator, Commercial, Single Solid Door, SS, on optional legs or casters	floor	27"w x 85"h x 29.5"d	E Ded 115V; 2.2 Amps; NEMA 5-15P
OPOI	4200	2	Autopsy Saw	stored	n/a	E 115V
OPOI	4205	15	Scissors, Dissetion, Sharp/Sharp, Straight	stored	n/a	None
OPOI	4209	2	Mallet, Bone; hammer for chiseling or striking bone	stored	n/a	None
OPOI	4212	2	Hammer, Claw, Hardwood Handle	stored	n/a	None
OPOI	4213	15	Scalpel Handle, #4, SS, for use with #22 style blades	stored	n/a	None
OPOI	4214	15	Dissection Probes, Seeker, Bent End	stored	n/a	None

OPOI	4221	100	Towels, Hand, Used	stored	n/a	None
OPOI	4222	60	Clip Boards,Hardboard; 8.5" x 14", Legal Brown	stored	n/a	None
OPOI	4223	20	Containers, Storage, with lids, White, 18"x12"x6"; Polyethylene (Rubbermaid FG350900WHT with LID)	stored	n/a	None
OPOI	4223a	15	Containers, Storage, with lids, White, 18"x12"x3.5"; Polyethylene (Rubbermaid FG350700WHT with LID)	stored	n/a	None
OPOI	4225	2	Containers, Disposable; 165 ounce; 7.75x7.75	stored	n/a	None
OPOI	4227	1	Nalgene, HDPE Carboy with Spigot, (5 gallon/20 liter)	countertop	approx 18"w x 18"d x 24"h	None
OPOI	4230	2	Dissecting Trays, Plastic, 12 Per Pack, Beige 14" x18"x1"	stored	n/a	None
OPOI	4231	15	Forceps, Dressing; 6", SS	stored	n/a	None
OPOI	4232	2	Knife, Autopsy Dissecting, Grooved Handle, Secure Grip, Rigid tapered blade with pointed tip	stored	n/a	None
OPOI	4233	1	Knife, Standard Grade, Disposable, 10 Per PK, Double Honed, Flexible Blade	stored	n/a	None
OPOI	4234	1	Meat Slicer, Commercial Grade, 12", Die Cast Aluminum Body, Counter Plate, blade cover & carriage	countertop	n/a	E 120V; 15 amp
OPOI	4235	9	Office Type Supplies Such As Eraser Board Markers	stored	n/a	None

ARCH ROOM NO **B006**

ROOM TITLE **CADAVER STORAGE & LOADING**

GROUP	EQNO	QTY	DESCRIPTION	LOCATION	SIZE-STD	UTILITIES
CPCI	1054	1	Clock System, Synchronized; Analogue, With Second Hand; Sized Appropriate for Space; Control System	wall	VARIES	E; Low Voltage
OPOI	2944	1	Telephone, Wall Mounted: TO BE SPECIFIED BY OWNER	wall	8x3X10	Comm.
OPVI	3040a	1	Wastebasket, Front Step-On,Plastic,Rectangular, 24 gallon, Colors: Beige	floor	22.5"w x 13.75"d x 32.5"h	None
OPVI	3072	4	Container, 55 Gallon, Plastic with Lids & Dolly, for Cadaver Disected Parts; COLOR: GRAY	floor	26.5" Diameter x 33"h	None
OPOI	3079	1	Bucket, Mop with ringer, Compact 26 Quart, on Casters, Yellow (FINISHING TOUCHES)	floor	15.6"w x 18.6"l x 16.7"h	None

OPOI	3100	1	Dispenser, Paper Towel: TYPE TBD ? BY OWNER-CURRENT JANITORIAL SERVICE	wall mount	TBD	None
OPOI	3103	2	Dispenser, Soap; Automatic	wall	7"w x5"d x10.25"h	None; Battery Operated
CPCI	3115	4	Robe Hook, Double	wall	6x6x3	None
OPCI	3132	1	Shelf, Stainless, With Raised Edge For Cadaver Storage Area (WILL REQUIRE BACKING)	wall mount	18"w x 6"d x 2"h	None
OPSVCI	3276	1	Refrigerator, Morgue for up to 30 cadaver trays; DETAILS BY MFG	Built In	SEE MFG DESIGN DETAILS	TBD BY MFG
OPSVI	3277	1	Lift, Cadaver, End Operation	floor	95.2"l x33.2"w x29.2 adj ht	Battery Operated
OPSVCI	3278	2	Sink, Scullery; for Cadaver Storage Area, Size/Style/Features TBD/Mortech Design	TBD	TBD by Design	Hot/Cold Water/Drain/
OPVI	3278b	2	Table, Cadaver, Prosection/Dissection; Style/Features TBD by Owner Review Board/Design Firm	floor	80"l x30"w x32-38" adj ht	None

ARCH ROOM NO **B007**

ROOM TITLE **LAB, GROSS ANATOMY**

GROUP	EQNO	QTY	DESCRIPTION	LOCATION	SIZE-STD	UTILITIES
CPCI	1054	2	Clock System, Synchronized; Analogue, With Second Hand; Sized Appropriate for Space; Control System	wall	VARIES	E; Low Voltage
OPVI	1340a	12	Stool, Backrest, Adj.Ht Soft Casters for Hard Flooring, (no footring) VINYL Upholstery; Stdg Height	floor	14 X 15 X 26” -37.5H	None
OPOI	2401	2	Cart, Utility; 3 Shelf; Mobile; Handles on Both Ends	floor	34"l x 19"d x 38"	None
CPCI	2505	1	Board, Bulletin, Rubber Tack, Aluminum Frame	wall	48"w x 48"h x2"d	None
CPCI	2518	13	Board, Marker, Magnetic Cleanable Surface,w/Tray, 48" x 48" x 1"d	wall	48"w x48"h x1"d	None
CPCI	2523	2	Board, Marker; Large for Stage Area/Conference Spaces; Wall Mounted	wall	8'w x 4'h x2"d	None
OPOI	2540	1	Anatomy Educational Models As Required to meet needs of classroom; Type & Qty TBD	stored	Varies	None
OPOI	2944	1	Telephone, Wall Mounted: TO BE SPECIFIED BY OWNER	wall	8x3X10	Comm.
OPVI	3040b	4	Wastebasket, END Step-On,Plastic,Rectangular, 24 gallon, Colors: SS with Black Trim	floor	22.5"w x 12.5"d x 28.75"h	None

OPOI	3088a	13	Container, Sharps: Countertop; 1 GALLON; Drop In Top: VERIFY OWNER SOURCE	Countertop	7"D x10.25"W x6"H	None
OPOI	3100	8	Dispenser, Paper Towel: TYPE TBD ? BY OWNER-CURRENT JANITORIAL SERVICE	wall mount	TBD	None
OPOI	3103	8	Dispenser, Soap; Automatic	wall	7"w x5"d x10.25"h	None; Battery Operated
OPVI	3278b	15	Table, Cadaver, Prosection/Dissection; Style/Features TBD by Owner Review Board/Design Firm	floor	80"l x30"w x32-38" adj ht	None
OPOI	3907	2	Computer With Dual Monitor, Wireless Keyboard & Mouse; TO BE SPECIFIED BY OWNER	desk top	TBD	E 115V; Data
OPOI	4103	1	Podium, Cabinet, Audio/Visual, Portable, For Up TO 2 PC & DUAL MONITOR; SPECS BY I.T. DEPT/3RD	floor	TBD By Design	E 115V Quad; 2 Data/?Com
OPOI	4106	1	Camera, Digital For Use in Labs: TO BE SPECIFIED BY OWNER I.T. DEPT	stored	n/a	None
OPOI	4108	1	Camera, Document for Classrooms: SPECS BY OWNER I.T. DEPT	Sits on 4103	11.7"w x19"d x18.8"h	E 115V, Data
OPOI	4131	4	Television Monitor, Flat Panel, 65"; Wall Mount; REQ BACKING: DETAILS BY I.T. & 3RD PARTY VENDOR	wall/ceiling mt	57.6"w x 2.5"d x 33.2"h	E 115V; Data
OPOI	4136	12	Television-Monitor, High Resolution Flat Panel, 55", WaMount; REQUIRES BACKING: SPEC BY OWNER	wall or ceiling	49.2"w x 29"h x 3.1"d	E 115V; Cabling; Data
OPOI	4228	1	First Aid Kit, Wall Mounted; SPECIFICATIONS BY OSU SAFETY DEPARTMENT: REQUIRES BACKING	wall mount	Typical 7" w x 7.5" h x 3" d	None
OPOI	4229	1	SDS Folder/Manual & Wall Rack; SPECIFICATIONS BY OSU SAFETY DEPARTMENT: REQUIRES BACKING	wall mount	Typical 20"w x14"h x 4"d	None
OPOI	8075	15	Bucket,Mobile,Stainless Steel,"Kickbucket", 12.5 Quart, Optional Kickstand & Cover	floor	12" diameter x 10"d	None
OPOI	9241	2	Stool, Rubber Foot Stool Platform, Single Step, Non Skid, 300# Capacity, Steel Construction	floor	14"w x11"d x9" step	None

ARCH ROOM NO **B008**

ROOM TITLE **WORKROOM, ANATOMY**

GROUP	EQNO	QTY	DESCRIPTION	LOCATION	SIZE-STD	UTILITIES
OPVI	0212b	4	Chair, Conference Type; MOLDED PLASTIC BACK & SEAT, Soft BLACK Casters for Hard Floors	floor	25.875"W 21.3125"D 32.625"H	None
CPCI	1054	1	Clock System, Synchronized; Analogue, With Second Hand; Sized Appropriate for Space; Control System	wall	VARIES	E; Low Voltage
OPVI	1412	1	Table, Round, Diameter, 36"	floor	36" diameter x 30"h	None

CPCI	2518	2	Board, Marker, Magnetic Cleanable Surface,w/Tray, 48" x 48" x 1"d	wall	48"w x48"h x1"d	None
OPVI	3062b	1	Wastebasket, Office,Tall, 23 gallon, Open Top; COLOR: GRAY	floor	11"w x 22"d x 30"h	None
CPCI	3115	2	Robe Hook, Double	wall	6x6x3	None
OPVI	3310	1	Refrigerator, Undercounter, ADA 5.5 cubit ft, auto defrost, 5 YR Compressor Warranty, Color TBD	floor	23.63"w x 23.5"d x 32"h	E Ded 115V

ARCH ROOM NO **B009**

ROOM TITLE **PREP ROOM, GROSS ANATOMY**

GROUP	EQNO	QTY	DESCRIPTION	LOCATION	SIZE-STD	UTILITIES
CPCI	1054	1	Clock System, Synchronized; Analogue, With Second Hand; Sized Appropriate for Space; Control System	wall	VARIES	E; Low Voltage
OPVI	3020	1	Washer, Top Load 4.6 Cu Ft, Energy Star, With Sanitize Cycle: Stainless Steel Tub	floor	27"w x27"d install depth x31.5"D	E 120V, 20 Amp, HW,CW,D
OPVI	3021	1	Dryer, Front Load, Electric; Energy Star; High End Residential	floor	27"w x27"d install depth x31.5"D	E 240V
OPVI	3040a	1	Wastebasket, Front Step-On,Plastic,Rectangular, 24 gallon, Colors: Beige	floor	22.5"w x 13.75"d x 32.5"h	None
OPOI	3088a	1	Container, Sharps: Countertop; 1 GALLON; Drop In Top: VERIFY OWNER SOURCE	Countertop	7"D x10.25"W x6"H	None
OPOI	3100	1	Dispenser, Paper Towel: TYPE TBD ? BY OWNER-CURRENT JANITORIAL SERVICE	wall mount	TBD	None
OPOI	3103	1	Dispenser, Soap; Automatic	wall	7"w x5"d x10.25"h	None; Battery Operated
OPVI	3278b	1	Table, Cadaver, Prosection/Dissection; Style/Features TBD by Owner Review Board/Design Firm	floor	80"l x30"w x32-38" adj ht	None
OPOI	4200	2	Autopsy Saw	stored	n/a	E 115V
OPOI	4201	15	Forceps, Russian Tissue, SS, Ribbed Grip, Rounded Multi Tooth	stored	n/a	None
OPOI	4202	12	Forceps, Liston Bone Cutting, Straight	stored	n/a	None
OPOI	4203	15	Dissecting Kit, Student, 13 PCs, Vinyl Case	stored	n/a	None
OPOI	4204	15	Forceps, Adson, Tissue, 4.75", Standard grade SS, Extra Broad ribbed grip	stored	n/a	None

OPOI	4205	20	Scissors, Dissetion, Sharp/Sharp, Straight	stored	n/a	None
OPOI	4206	10	Forceps, Hemostatic, Rochester Pean, with finger ring grip, SS, Curved, Straight, Serrated	stored	n/a	None
OPOI	4207	1	Knife, Standard Grade Sheffield SS, 10 PK, Double honed, flexible blade	stored	n/a	None
OPOI	4208	5	Skull Breaker, Virchow; T handle grip with thin access blade, SS	stored	n/a	None
OPOI	4209	5	Mallet, Bone; hammer for chiseling or striking bone	stored	n/a	None
OPOI	4210	8	Chisel, 1/2 inch, Wood	stored	n/a	None
OPOI	4211	8	Chisel, 1 inch, Wood	stored	n/a	None
OPOI	4213	15	Scalpel Handle, #4, SS, for use with #22 style blades	stored	n/a	None
OPOI	4214	15	Dissection Probes, Seeker, Bent End	stored	n/a	None
OPOI	4215	10	DIS-Spray; Tissue Preservative	stored	n/a	None
OPOI	4216	15	Bio-Perm Concentrate; Tissue Preservative	stored	n/a	None
OPOI	4217	20	Disaster Pouch, Medium Weight, Blue, Envelope Zip, Adult 94"l x 36"w	stored	n/a	None
OPOI	4218	6	Cremation Trays, Plywood Bottom 2 Per Pk	stored	n/a	None
OPOI	4219	15	Head Rest-Vari Pose Head & Body Block	stored	n/a	None
OPOI	4220	50	Sheets, Twin Size, Used	stored	n/a	None
OPOI	4221	250	Towels, Hand, Used	stored	n/a	None
OPOI	4222	60	Clip Boards,Hardboard; 8.5" x 14", Legal Brown	stored	n/a	None
OPOI	4223	10	Containers, Storage, with lids, White, 18"x12"x6"; Polyethylene (Rubbermaid FG350900WHT with LID)	stored	n/a	None

OPOI	4224	4	Meat Saw, Stainless Steel Butcher Hand, with trigger lock, ergonomic handle	stored	n/a	None
OPOI	4225	1	Containers, Disposable; 165 ounce; 7.75x7.75	stored	n/a	None
OPOI	4227	3	Nalgene, HDPE Carboy with Spigot, (5 gallon/20 liter)	countertop	approx 18"w x 18"d x 24"h	None
OPOI	4230	2	Dissecting Trays, Plastic, 12 Per Pack, Beige 14" x18"x1"	stored	n/a	None
OPOI	4235	15	Office Type Supplies Such As Eraser Board Markers	stored	n/a	None
OPOI	4236	30	Spray Bottles, 32 Ounce, for Disinfecting Surfaces	stored	N/A	None
OPOI	8075	1	Bucket,Mobile,Stainless Steel,"Kickbucket", 12.5 Quart, Optional Kickstand & Cover	floor	12" diameter x 10"d	None
OPOI	9240	1	Stool, Kik Step, 350# Capacity, Available in Silver, Gray, Black	floor	16" DIAMETER X 14"H	None

ARCH ROOM NO **B012A**

ROOM TITLE **HOLDING AREA; LAUNDRY & TRASH CARTS (NEAR MAIL RM)**

GROUP	EQNO	QTY	DESCRIPTION	LOCATION	SIZE-STD	UTILITIES
OPVI	3062b	1	Wastebasket, Office,Tall, 23 gallon, Open Top; COLOR: GRAY	floor	11"w x 22"d x 30"h	None

ARCH ROOM NO **B015**

ROOM TITLE **OFFICE, SHARED; FACILITIES & HOUSEKEEPING**

GROUP	EQNO	QTY	DESCRIPTION	LOCATION	SIZE-STD	UTILITIES
OPVI	0150b	1	Chair, Rotary,Std Mesh Back,5-Legged, SOFT CASTERS-HARD FLOORING , Ergonomic,Adj Arms,	floor	28.25"W 25.25"D 42.25”-47”H	None
OPVI	1560	1	Desk, Double Pedestal, w/overhead hutch for binder storage	floor	30″D x 60″W x 29 ½”H	None
OPVI	2254	7	Shelving Unit, Open Wire Shelves, Mobile, With Bumper Guards	floor	36"w x 24"d x 69"h	None
OPVI	2606d	1	Bench,Work, Hardwood Surface, w/upper & lower shelf storage, power strip	floor	60"l x 24"d x36"h	E 115V Quad
OPOI	2941	1	Telephone, Standard Desk: TO BE SPECIFIED BY OWNER	desktop	10"D X 8"W X 4"H	Data-Com
OPVI	3039a	1	Wastebasket, Rectangular, plastic, water/fire resistant,28qt	floor	14lx11wx16h	None
CPCI	3115	1	Robe Hook, Double	wall	6x6x3	None

OPOI	3903	1	Computer,Personal & Monitor, Wireless Keyboard & Mouse for Desk Use: TO BE SPECIFIED BY OWNER	desktop	24"w x 18"d x 22"h	E 115V; Data
OPOI	3907	1	Computer With Dual Monitor, Wireless Keyboard & Mouse; TO BE SPECIFIED BY OWNER	desk top	TBD	E 115V; Data

ARCH ROOM NO **B016**

ROOM TITLE **OFFICE, SHARED; SECURITY (2 STAFF)**

GROUP	EQNO	QTY	DESCRIPTION	LOCATION	SIZE-STD	UTILITIES
OPVI	0150a	2	Chair, Rotary,Std Mesh Back,5-Legged, HARD CASTERS-SOFT Flooring ,Ergonomic,Adj Arms, Black	floor	28.25"W 25.25"D 42.25"-47"H	None
OPVI	0200a	1	Chair, Desk Side Chair; HARD GLIDES FOR SOFT FLOORING: Upholstery: Stinson, Fuse, Tangelo	floor	25.25"W 22.25'1'D 33"H	None
OPVI	0700	1	Bookcase/Lateral file combination unit; High Pressure Laminate: Columbian Walnut?	floor	36"w x20"d x68"h	none
OPVI	1500c	1	Workstation,Open Office Furniture System,Modular, 2 person	floor	84"W x 24"D x 120"L x 29.5"H	E 115V Quad: Data Com
OPOI	2291b	1	Taser Storage, 4 compartments, 2x2 Configuration, 14 gauge steel with rubber matting	E1-918-04	25"W x 26"H x 22"D	E 115V
OPOI	2941	2	Telephone, Standard Desk: TO BE SPECIFIED BY OWNER	desktop	10"D X 8"W X 4"H	Data-Com
OPVI	3039a	2	Wastebasket, Rectangular, plastic, water/fire resistant,28qt	floor	14lx11wx16h	None
CPCI	3115	1	Robe Hook, Double	wall	6x6x3	None
OPOI	3131	2	Shelf, Stainless, With Clothing Rod For Security Office (WILL REQUIRE BACKING)	wall mount	24"w x 8"d x 8"h	None
OPOI	3907	2	Computer With Dual Monitor, Wireless Keyboard & Mouse; TO BE SPECIFIED BY OWNER	desk top	TBD	E 115V; Data
OPOI	3915	1	Printer, Badge; Student/Staff ID & Access Control: SPECIFICATIONS BY OWNER/3RD PARTY	desktop	Typical 18.75"w x20.4"d x13.2"h	E 115V: Data
OPOI	4110	1	Cam, Web or Poly Com Cam for Meeting Rooms: TO SPECIFIED BY OWNER I.T. DEPT	wall mount	TBD BY I.T.	TBD
OPOI	4137	4	Television, Flat Panel, 46" WITH WALL MOUNT; OWNER TO SPECIFY DETAILS: REQUIRES BACKING	wall bracket	TYPICAL: 42"wx2.9"d x24.3"h	E 115V; Data

ARCH ROOM NO **B017**

ROOM TITLE **MAILROOM**

GROUP	EQNO	QTY	DESCRIPTION	LOCATION	SIZE-STD	UTILITIES
OPOI	1094	6	Tote (Bin) for Postage Handling, 3 per pack (OWNER TO PURCHASE)	stored	17"l x 12.5"w x11"d	None

OPVI	2254	1	Shelving Unit, Open Wire Shelves, Mobile, With Bumper Guards	floor	36"w x 24"d x 69"h	None
OPOI	2406	1	Cart, Utility, Mobile, Plastic, 2 Open Shelves; Heavy Duty 500 # Capacity	floor	39"lx18"wx33"h	None
OPOI	2451	1	Dolly, General Use, 4 wheels, open frame, carpeted top	stored	18x30x6	None
OPOI	2455	2	Dolly, Wheeled, Convertible, flatless tires, aluminum, 1000 lb capacity	floor	18"w x 18.75"d x 45.5"h	None
OPOI	2602a	1	Stool, Folding for sitting in front of mail workcounter	floor	20"w x 20"d x 42"h	None
OPOI	2752	2	Mats, Runners, Anti Fatigue, Reconfigurable	floor	36"w x 24"d	None
OPOI	2941	1	Telephone, Standard Desk: TO BE SPECIFIED BY OWNER	desktop	10"D X 8"W X 4"H	Data-Com
OPVI	3039a	1	Wastebasket, Rectangular, plastic, water/fire resistant,28qt	floor	14lx11wx16h	None
OPVI	3269c	1	Refrigerator, Household, 2 Door, Freezer On Top (NO ICEMAKER)	floor	30"w x31"d x69"h	E Ded 115V
OPOI	3766	1	Meter, Postage, Semi Automatic up to 60 PPM (TYPICALLY LEASED) TO BE SPECIFIED BY OWNER	countertop	16"w x 15.5"d x 11.5"h	E 115V; Data-Com

ARCH ROOM NO **B018**

ROOM TITLE **M.D.F. BASEMENT**

GROUP	EQNO	QTY	DESCRIPTION	LOCATION	SIZE-STD	UTILITIES
OPVI	2254	3	Shelving Unit, Open Wire Shelves, Mobile, With Bumper Guards	floor	36"w x 24"d x 69"h	None
OPVI	3062b	1	Wastebasket, Office,Tall, 23 gallon, Open Top; COLOR: GRAY	floor	11"w x 22"d x 30"h	None
OPOI	3202	2	Bin, Parts, Storage, Mobile, Double Sided Louvered Panel Customize Bins, 5" Swivel Casters w/brake	floor	36"w x 25.75"d x72.5"h	None

ARCH ROOM NO **B021**

ROOM TITLE **VACUUM-COMPRESSOR; MECHANICAL**

GROUP	EQNO	QTY	DESCRIPTION	LOCATION	SIZE-STD	UTILITIES
OPOI	2656	1	Ladder, 3FT TYPE IAA FIBERGLASS STEP LADDER WITH SHELF	stored on wall	19.75"W X 8"D X36"H	None
OPOI	2658a	1	Ladder, 10FT REACH HEIGHT FIBERGLASS PLATFORM LADDER W/CASTERS 4FT	stored on wall	25.5"w x10"d x72"h	None
OPOI	2659	1	Rack, Ladder: Wall Mounted: for hanging ladders: Rubbermaid Fastrack Organizer	wall	48" w x 2.5"d x 3"h	None

ARCH ROOM NO B022

ROOM TITLE JANITORIAL, LEVEL BASEMENT

GROUP	EQNO	QTY	DESCRIPTION	LOCATION	SIZE-STD	UTILITIES
OPVI	2265	3	Shelving, Wall; 2 Stainless Steel shelfs for supply storage: REQUIRES BACKING	wall mounted	12"d x 36"w	None
OPOI	2609	1	Rack, Wall Mounted to hold mops, etc…WILL REQUIRE BACKING	wall	36"w x 1.5"d x 5"h	None
OPOI	3048	1	Truck, Janitorial, Mobile, Locked Storage/2 Buckets/Wringer, Trash collection (FINISHING TOUCHES)	floor	20x50x38	None
OPOI	3049	1	Mops, Mop Heads, Dust Mops, etc…for Janitorial Cleaning (FINISHING TOUCHES)	stored	VARIES	None
OPOI	3051	1	Vacuum, Upright; Commercial; with attachments (FINISHING TOUCHES)	floor/stored	18"w x 13"d x 44"h	E 120V

ARCH ROOM NO B023

ROOM TITLE TOILET, MENS

GROUP	EQNO	QTY	DESCRIPTION	LOCATION	SIZE-STD	UTILITIES
OPVI	3043c	1	Waste Container, Drop in Top, Suitable for Restroom Areas, 15 gallon, Textured Black	floor	15" diameter x 30"h	None
OPOI	3088b	1	Container, Sharps: Wall Mounted, Lockable	Wall mount	10 1/2"W x 4 1/2"D x 12"H	None
OPOI	3100	2	Dispenser, Paper Towel: TYPE TBD ? BY OWNER-CURRENT JANITORIAL SERVICE	wall mount	TBD	None
OPOI	3102	2	Dispenser, Soap: SPECIFICATIONS & Type TBD BY OWNER	wall mount	7"w x4"d x11.5"h	None
CPCI	3115	1	Robe Hook, Double	wall	6x6x3	None
CPCI	9993	1	Track, Cubicle Privacy Curtain, of Appropriate Size & fabric type	ceiling	as required-see layout	None:
OPVI	9997	1	Bench, Sitting Suitable for Showering Area (water-proof) TEAK	floor	36"W X 17.5D X 17.5"H	None

ARCH ROOM NO B024

ROOM TITLE OFFICE, FACULTY; ANATOMY LAB

GROUP	EQNO	QTY	DESCRIPTION	LOCATION	SIZE-STD	UTILITIES
OPVI	0150a	1	Chair, Rotary,Std Mesh Back,5-Legged, HARD CASTERS-SOFT Flooring ,Ergonomic,Adj Arms, Black	floor	28.25"W 25.25"D 42.25”-47”H	None
OPVI	0200a	1	Chair, Desk Side Chair; HARD GLIDES FOR SOFT FLOORING: Upholstery: Stinson, Fuse, Tangelo	floor	25.25"W 22.25'1'D 33"H	None

OPVI	0700	2	Bookcase/Lateral file combination unit; High Pressure Laminate: Columbian Walnut?	floor	36"w x20"d x68"h	none
OPVI	1500	1	Workstation, Furniture System, Upper & Lower Storage: Laminate-Columbian Walnut; Fabric-Mandarian	floor	Various	E 115V Quads: Data-Comm
OPOI	2941	1	Telephone, Standard Desk: TO BE SPECIFIED BY OWNER	desktop	10"D X 8"W X 4"H	Data-Com
OPVI	3039a	1	Wastebasket, Rectangular, plastic, water/fire resistant,28qt	floor	14lx11wx16h	None
CPCI	3115	1	Robe Hook, Double	wall	6x6x3	None
OPOI	3907	1	Computer With Dual Monitor, Wireless Keyboard & Mouse; TO BE SPECIFIED BY OWNER	desk top	TBD	E 115V; Data

ARCH ROOM NO **B025**

ROOM TITLE **TOILET, WOMENS**

GROUP	EQNO	QTY	DESCRIPTION	LOCATION	SIZE-STD	UTILITIES
OPVI	3043c	1	Waste Container, Drop in Top, Suitable for Restroom Areas, 15 gallon, Textured Black	floor	15" diameter x 30"h	None
OPOI	3088b	1	Container, Sharps: Wall Mounted, Lockable	Wall mount	10 1/2"W x 4 1/2"D x 12"H	None
OPOI	3100	2	Dispenser, Paper Towel: TYPE TBD ? BY OWNER-CURRENT JANITORIAL SERVICE	wall mount	TBD	None
OPOI	3102	2	Dispenser, Soap: SPECIFICATIONS & Type TBD BY OWNER	wall mount	7"w x4"d x11.5"h	None
CPCI	3115	1	Robe Hook, Double	wall	6x6x3	None
CPCI	9993	1	Track, Cubicle Privacy Curtain, of Appropriate Size & fabric type	ceiling	as required-see layout	None:
OPVI	9997	1	Bench, Sitting Suitable for Showering Area (water-proof) TEAK	floor	36"W X 17.5D X 17.5"H	None

ARCH ROOM NO **B026**

ROOM TITLE **ALCOVE, COPY: (CORRIDOR BETWEEN ANATOMY OFFICES)**

GROUP	EQNO	QTY	DESCRIPTION	LOCATION	SIZE-STD	UTILITIES
OPVI	3062b	1	Wastebasket, Office,Tall, 23 gallon, Open Top; COLOR: GRAY	floor	11"w x 22"d x 30"h	None
OPSVI	3758	1	Copier, High Vol, 55ppm, MF, networkable: EXISTING LEASE BY OWNER: INSTALLED BY 3RD PARTY	floor	Typical Options Req 6 ft x 3 ft	E-Ded 120V; 20 Amps; RJ 45 Plug Data-Com
OPVI	3763	1	Shredder, Cross Cut, 12 Gallon Capacity, 18 sheets feed,	floor	11.25" x 21"d x 28"h	E 115V

ARCH ROOM NO B027

ROOM TITLE OFFICE, FACULTY; ANATOMY LAB

GROUP	EQNO	QTY	DESCRIPTION	LOCATION	SIZE-STD	UTILITIES
OPVI	0150a	1	Chair, Rotary,Std Mesh Back,5-Legged, HARD CASTERS-SOFT Flooring ,Ergonomic,Adj Arms, Black	floor	28.25"W 25.25"D 42.25”-47”H	None
OPVI	0200a	1	Chair, Desk Side Chair; HARD GLIDES FOR SOFT FLOORING: Upholstery: Stinson, Fuse, Tangelo	floor	25.25"W 22.25'1'D 33"H	None
OPVI	0700	2	Bookcase/Lateral file combination unit; High Pressure Laminate: Columbian Walnut?	floor	36"w x20"d x68"h	none
OPVI	1500	1	Workstation, Furniture System, Upper & Lower Storage: Laminate-Columbian Walnut; Fabric-Mandarian	floor	Various	E 115V Quads: Data-Comm
OPOI	2941	1	Telephone, Standard Desk: TO BE SPECIFIED BY OWNER	desktop	10"D X 8"W X 4"H	Data-Com
OPVI	3039a	1	Wastebasket, Rectangular, plastic, water/fire resistant,28qt	floor	14lx11wx16h	None
CPCI	3115	1	Robe Hook, Double	wall	6x6x3	None
OPOI	3907	1	Computer With Dual Monitor, Wireless Keyboard & Mouse; TO BE SPECIFIED BY OWNER	desk top	TBD	E 115V; Data

DEPT TITLE LEVEL ONE:LECTURE HALL 1;SIM LAB-STUDY-GYM-COM

ARCH ROOM NO 1000

ROOM TITLE VESTIBULE, LEVEL 1 ENTRANCE

GROUP	EQNO	QTY	DESCRIPTION	LOCATION	SIZE-STD	UTILITIES
OPOI	1091	1	Mat(s) Floor for Exterior Entry Areas; OWNER TO PROCURE AND PLACE	floor	TBD	None
OPVI	1815	1	Stand, Umbrella Wet Bag, holds 200 bags x 2	floor	14" diameter x 42"h	None
OPVI	1816	1	Stand, Umbrella, Black Triangular Shape, Vented, Holds Up To 12 Umbrellas	floor	10.25"w x 10.25"l x 24"h	None
OPVI	3043	1	Wastebasket, Stainless Steel, Half Moon Shape 12 gal; Open Top; Perforated Panel	floor	18"w x32"hx12"D	None
OPOI	4129	1	Monitor, Digital Directory; REQUIRES BACKING; Size & Details by Owner I.T./3RD Party Vendor	wall mount	TBD	E 115V; Data-Com

ARCH ROOM NO 1001A

ROOM TITLE MARKET PLACE (COORDINATED-OWNER VENDOR SUPPLIER)

GROUP	EQNO	QTY	DESCRIPTION	LOCATION	SIZE-STD	UTILITIES
OPVI	3043e	1	Waste Container, Drop in Top, 25 Gallons, SS, RM Classic Series; Perforated	floor	18" diameter x 36"h	None
OPOI	3102a	1	Dispenser, Waterless Hand Sanitizer	wall	TBD	None
OPVI	3194	2	Microwave, 1.6 Cu Ft, SS, 1100 Watts; multiple one touch options; 10 cooking levels,	counter/shelf	21.75"w x 13"h x 18.5"d	E 120V; 15 amps
OPSVI	3219	1	Cappuccino Maker; FUTURE ITEM; Details will be driven by space & utilities available	countertop	TBD BY SPACE AVAILABLE	E 120V; Water Supply; Drain
OPVICI	3330	1	Icemaker, Bulk, 400# storage bin with condenser; Nugget Ice: AIR COOLED	FLOOR	30"w x 34.5"d x 77.5"h with condenser	E 115V/60HZ/SP: SEE DETAILS FOR WATER & DRAIN
OPSVI	3332	1	Refrigerator, Drink Cooler; 2 Glass Hinged Doors: PROVIDED & INSTALLED BY 3RD PARTY VENDOR	floor	40 1/8"L x 24 1/2"D x57 1/2"H	E Ded 115V;3.6 amps
OPSVI	3333	1	Refrigerator, Food Merchandise Display: PROVIDED & INSTALLED BY 3RD PARTY VENDOR	floor	54 1/8"W x29 3/4"D x75 5/8"H	E Ded 115V;8.7 amp; Plug Type PC 731
OPSVI	3334	1	Freezer, Food Merchandise, Single Glass Swing Door: PROVIDED & INSTALLED BY 3RD PARTY VENDOR	floor	26.8"W x31.9"D x79.5"H	E Ded 115V/60Hz/SP; 5-15 NEMA Plug
OPOI	4137	1	Television, Flat Panel, 46" WITH WALL MOUNT; OWNER TO SPECIFY DETAILS: REQUIRES BACKING	wall bracket	TYPICAL: 42"wx2.9"d x24.3"h	E 115V; Data

ARCH ROOM NO 1001B

ROOM TITLE BOOKSTORE

GROUP	EQNO	QTY	DESCRIPTION	LOCATION	SIZE-STD	UTILITIES

OPVI	0150b	1	Chair, Rotary,Std Mesh Back,5-Legged, SOFT CASTERS-HARD FLOORING , Ergonomic,Adj Arms,	floor	28.25"W 25.25"D 42.25”-47”H	None
CPCI	1054	1	Clock System, Synchronized; Analogue, With Second Hand; Sized Appropriate for Space; Control System	wall	VARIES	E; Low Voltage
OPOI	1702	1	Register, Cash-Retail Space: QUICKBOOKS DESKTOP POINT OF SALE; INCLDS PIN PAD/REC	counter top	VARIES	E 115 V; Data-Com
OPOI	2941	1	Telephone, Standard Desk: TO BE SPECIFIED BY OWNER	desktop	10"D X 8"W X 4"H	Data-Com
OPVI	3039a	1	Wastebasket, Rectangular, plastic, water/fire resistant,28qt	floor	14lx11wx16h	None
CPCI	3106a	1	Mirror,Full Length, Dressing	wall	24x1x60	None
CPCI	3115	1	Robe Hook, Double	wall	6x6x3	None
OPOI	3124	1	Rack, Clothing, Mobile, With Lower & Upper Shelf	floor	48"w x 18"d x69"h	None
CPCI	9993	1	Track, Cubicle Privacy Curtain, of Appropriate Size & fabric type	ceiling	as required-see layout	None:
OPVI	9996a	1	Bench, Sitting Suitable for Location: Fabric-Stinson Fuse-Tangelo; Metal-Polished Aluminum	floor	Approx 48"w x 20"d x 20"h	None

ARCH ROOM NO **1002**

ROOM TITLE **STORAGE, BOOKSTORE**

GROUP	EQNO	QTY	DESCRIPTION	LOCATION	SIZE-STD	UTILITIES
OPOI	1354	1	Safe, Cash; Undercounter, EXISTING EQUIPMENT TO TRANSFER	floor	APPROX 24"W X 24"D X30"H	None
OPVI	3062b	1	Wastebasket, Office,Tall, 23 gallon, Open Top; COLOR: GRAY	floor	11"w x 22"d x 30"h	None
OPOI	3914a	1	Printer, Multifunction, Color, LaserJet mf copy/scan/fax	countertop	17"w x 21"d x 22"h	E 115V: Data

ARCH ROOM NO **1003**

ROOM TITLE **LOBBY, CENTRAL L1, STUDENT SEATING**

GROUP	EQNO	QTY	DESCRIPTION	LOCATION	SIZE-STD	UTILITIES
OPVI	1027c	4	Seating, 1 Person, Upholstered: Club Style; Design Features TBD; FABRIC; QUARRY & TANGELO	floor	32"W 33.5"D 28.25"H	None
OPVI	1027d	2	Seating, 1 Person, Upholstered: Club Style; Design Features TBD; FABRIC; BITMAP & QUARRY	floor	32"W 33.5"D 28.25"H	None
CPCI	1054	1	Clock System, Synchronized; Analogue, With Second Hand; Sized Appropriate for Space; Control System	wall	VARIES	E; Low Voltage

OPVI	1410a	1	Table, End, Drum Round 20" Diameter (Laminate: Mocha)	floor	20" Diameter x20"h	None
OPVI	1421	1	Table, Coffee; Suitable for Lounge/Waiting Areas	floor	36" diameter x 24"h	None
OPOI	4129	1	Monitor, Digital Directory; REQUIRES BACKING; Size & Details by Owner I.T./3RD Party Vendor	wall mount	TBD	E 115V; Data-Com
OPOI	8202	1	Defibrillator, External, Automated (AED) With Accessories	Stored	16"w x 14.75"h x8.5"d	None
CPCI	8202a	1	Cabinet, SEMI Recessed AED; Stainless Steel battery alarm/safety clasp/optional custom logo	recessed wall	wall opening 15.25"w x15.25"h x3.75"d	None

ARCH ROOM NO 1004

ROOM TITLE RECEPTION/SECURITY

GROUP	EQNO	QTY	DESCRIPTION	LOCATION	SIZE-STD	UTILITIES
OPVI	0150b	2	Chair, Rotary,Std Mesh Back,5-Legged, SOFT CASTERS-HARD FLOORING , Ergonomic,Adj Arms,	floor	28.25"W 25.25"D 42.25”-47”H	None
OPVI	0430d	2	Cabinet, Filing,Lateral, Mobile Pedestal, Box/File: Color: Loft	floor	22 7/8” D x 15W x 22H	None
OPOI	2941	2	Telephone, Standard Desk: TO BE SPECIFIED BY OWNER	desktop	10"D X 8"W X 4"H	Data-Com
OPVI	3039a	2	Wastebasket, Rectangular, plastic, water/fire resistant,28qt	floor	14lx11wx16h	None
OPOI	3907	2	Computer With Dual Monitor, Wireless Keyboard & Mouse; TO BE SPECIFIED BY OWNER	desk top	TBD	E 115V; Data
OPOI	3914	1	Printer, Multifunction, LaserJet mf copy/scan/fax	countertop	15"w x 18"d x 16"h	E 115V: Data
OPOI	3915	1	Printer, Badge; Student/Staff ID & Access Control: SPECIFICATIONS BY OWNER/3RD PARTY	desktop	Typical 18.75"w x20.4"d x13.2"h	E 115V: Data
OPOI	4110	1	Cam, Web or Poly Com Cam for Meeting Rooms: TO SPECIFIED BY OWNER I.T. DEPT	wall mount	TBD BY I.T.	TBD

ARCH ROOM NO 1005

ROOM TITLE STORAGE, (BEHIND LECTURE HALL 1)

GROUP	EQNO	QTY	DESCRIPTION	LOCATION	SIZE-STD	UTILITIES
OPVI	3046a	1	Trash Collector, 32 Gal Brute, Vented, Round, Open Top: Color to be Selected (pkg of 6) GRAY	floor	21.92" Diameter; 25" with handles; 28"h	None

ARCH ROOM NO 1007

ROOM TITLE CORRIDOR; L1 S

GROUP	EQNO	QTY	DESCRIPTION	LOCATION	SIZE-STD	UTILITIES

OPVI	3043	2	Wastebasket, Stainless Steel, Half Moon Shape 12 gal; Open Top; Perforated Panel	floor	18"w x32"hx12"D	None

ARCH ROOM NO **1009**

ROOM TITLE **LECTURE HALL, LEVEL 1**

GROUP	EQNO	QTY	DESCRIPTION	LOCATION	SIZE-STD	UTILITIES
OPVI	0212a	95	Chair, Conference Type; MOLDED PLASTIC BACK & SEAT On Hard Casters For Carpet	floor	25.875"W 21.3125"D 32.625"H	None
OPVI	1005a	8	Chair, Side,MOLDED PLASTIC BACK & SEAT: HARD BLACK CASTERS FOR CARPET	floor	23"W 18.3125"D 32.625"H	None
CPCI	1054	2	Clock System, Synchronized; Analogue, With Second Hand; Sized Appropriate for Space; Control System	wall	VARIES	E; Low Voltage
OPVI	1328	3	Stool, Bar; Static; w/back; approp for counter areas	floor	26.5"W 26.5"D 30"H	None
OPVI	1329	1	Stool, Bar; Static; with low profile back; no arms; small scale; Fabric: Bitmap-Sienna	floor	18.75"w x 23.75"d x 30.25"h	None
OPVI	1419	1	Table, Rectangular, On Casters, With Flip Top	floor	36"w x 24"d x 30"h	None
CPCI	1422	1	Table, Lecture Hall; Custom Size; Must have USB, Microphone & Power Outlet: CONTRACTOR TO INSTALL	floor	TBD BY DESIGN	SEE DESIGN DETAILS
CPCI	1424c	18	Table Educational LEC;CUSTOM SIZES 1 USB,1 Push/ Talk Mic /1 Power Per Student:CONTRACTOR TO	floor	Per Design	Access to Power & Data
CPCI	2523	1	Board, Marker; Large for Stage Area/Conference Spaces; Wall Mounted	wall	8'w x 4'h x2"d	None
OPVI	3043e	3	Waste Container, Drop in Top, 25 Gallons, SS, RM Classic Series; Perforated	floor	18" diameter x 36"h	None
OPOI	3907	1	Computer With Dual Monitor, Wireless Keyboard & Mouse; TO BE SPECIFIED BY OWNER	desk top	TBD	E 115V; Data
OPOI	3909	2	Kiosk Center, Information; For IPAD DETAILS & COMPONENTS TO BE SPECIFIED BY OWNER I.T. DEPT	floor	TBD	E 115V; Data
OPOI	4100	2	Cart, Charging With 3 Modules; SPECIFICATIONS BY OWNER I.T.	floor	Typical 33.50"W x 26.00"D x 44.5"H	E 120V; 12 Amp
OPOI	4103	1	Podium, Cabinet, Audio/Visual, Portable, For Up TO 2 PC & DUAL MONITOR; SPECS BY I.T. DEPT/3RD	floor	TBD By Design	E 115V Quad; 2 Data/?Com
OPOI	4106	1	Camera, Digital For Use in Labs: TO BE SPECIFIED BY OWNER I.T. DEPT	stored	n/a	None
OPOI	4107	2	Camera, Digital; Ceiling Mounted for displaying to Lab viewing monitors;BY OWNER I.T. DEPT	CEILING	TBD	E 115; DATA; OR POE

OPOI	4108	1	Camera, Document for Classrooms: SPECS BY OWNER I.T. DEPT	Sits on 4103	11.7"w x19"d x18.8"h	E 115V, Data
OPOI	4130	2	Television, Flat Panel Monitor, 82" screen; Wall Mount REQUIRES BACKING; SPECS BY OWNER I.T.	wall mount	TYPICAL:72"w x 2.4"d x 45.1"h	E 115V; Data
OPOI	4131a	3	Television Monitor, Flat Panel, 65"; Ceiling Mount; REQ STRUCTURAL SUPPORT; I.T. & 3RD PARTY	ceiling mt	57.6"w x 2.5"d x 33.2"h	E 115V; Data
OPOI	4149	2	Scheduling System for Conference Room areas; 7" monitor display to be mtd outside of mtg space	wall mount	8.07"w x5.12"h x2.6"d	POE
OPOI	9328	1	Table, Treatment, Rigid Top, Padded, H Brace	floor	30"w x 72"l x 31"h	None

ARCH ROOM NO **1011A & 1011B**

ROOM TITLE **CLASSROOM, LARGE LL1 S**

GROUP	EQNO	QTY	DESCRIPTION	LOCATION	SIZE-STD	UTILITIES
OPVI	0212a	50	Chair, Conference Type; MOLDED PLASTIC BACK & SEAT On Hard Casters For Carpet	floor	25.875"W 21.3125"D 32.625"H	None
OPVI	1005a	4	Chair, Side,MOLDED PLASTIC BACK & SEAT: HARD BLACK CASTERS FOR CARPET	floor	23"W 18.3125"D 32.625"H	None
CPCI	1054	2	Clock System, Synchronized; Analogue, With Second Hand; Sized Appropriate for Space; Control System	wall	VARIES	E; Low Voltage
OPVI	1329	2	Stool, Bar; Static; with low profile back; no arms; small scale; Fabric: Bitmap-Sienna	floor	18.75"w x 23.75"d x 30.25"h	None
OPVI	1424a	4	Table Educational LEC; Access to Power/data/etc…:Laminate Asian Knight; Black Grommet & Power	floor	72" diameter x 30"h	Power/USB/Data
OPVI	1424b	2	Table Educational LEC; Access to Power/data/etc…:Laminate Asian Knight; Black Grommet & Power	floor	84" diameter x 30"h	Power/USB/Data
CPCI	2518	8	Board, Marker, Magnetic Cleanable Surface,w/Tray, 48" x 48" x 1"d	wall	48"w x48"h x1"d	None
OPOI	2941	2	Telephone, Standard Desk: TO BE SPECIFIED BY OWNER	desktop	10"D X 8"W X 4"H	Data-Com
OPVI	3043e	2	Waste Container, Drop in Top, 25 Gallons, SS, RM Classic Series; Perforated	floor	18" diameter x 36"h	None
OPOI	3907	2	Computer With Dual Monitor, Wireless Keyboard & Mouse; TO BE SPECIFIED BY OWNER	desk top	TBD	E 115V; Data
OPOI	4103	2	Podium, Cabinet, Audio/Visual, Portable, For Up TO 2 PC & DUAL MONITOR; SPECS BY I.T. DEPT/3RD	floor	TBD By Design	E 115V Quad; 2 Data/?Com
OPOI	4108	2	Camera, Document for Classrooms: SPECS BY OWNER I.T. DEPT	Sits on 4103	11.7"w x19"d x18.8"h	E 115V, Data

OPOI	4109	2	Microphone, Ceiling Hung; Poly Com or Comparable, for Meeting Rooms: SPECIFIED BY OWNER I.T. DEPT	ceiling	TBD BY I.T.	TBD
OPOI	4110	2	Cam, Web or Poly Com Cam for Meeting Rooms: TO SPECIFIED BY OWNER I.T. DEPT	wall mount	TBD BY I.T.	TBD
OPOI	4131a	2	Television Monitor, Flat Panel, 65"; Ceiling Mount; REQ STRUCTURAL SUPPORT; I.T. & 3RD PARTY	ceiling mt	57.6"w x 2.5"d x 33.2"h	E 115V; Data
OPOI	4136	6	Television-Monitor, High Resolution Flat Panel, 55", WaMount; REQUIRES BACKING: SPEC BY OWNER	wall or ceiling	49.2"w x 29"h x 3.1"d	E 115V; Cabling; Data
OPOI	4149	2	Scheduling System for Conference Room areas; 7" monitor display to be mtd outside of mtg space	wall mount	8.07"w x5.12"h x2.6"d	POE

ARCH ROOM NO **1012**

ROOM TITLE **STUDY GROUP 4**

GROUP	EQNO	QTY	DESCRIPTION	LOCATION	SIZE-STD	UTILITIES
OPVI	0212a	8	Chair, Conference Type; MOLDED PLASTIC BACK & SEAT On Hard Casters For Carpet	floor	25.875"W 21.3125"D 32.625"H	None
OPVI	1005a	1	Chair, Side,MOLDED PLASTIC BACK & SEAT: HARD BLACK CASTERS FOR CARPET	floor	23"W 18.3125"D 32.625"H	None
CPCI	1054	1	Clock System, Synchronized; Analogue, With Second Hand; Sized Appropriate for Space; Control System	wall	VARIES	E; Low Voltage
OPVI	1412d	1	Table, Educational, Round (access to power) :	floor	72" diameter x 30"h	Req Access To Floor Utilities
CPCI	2523	2	Board, Marker; Large for Stage Area/Conference Spaces; Wall Mounted	wall	8'w x 4'h x2"d	None
OPOI	2944	1	Telephone, Wall Mounted: TO BE SPECIFIED BY OWNER	wall	8x3X10	Comm.
OPVI	3043	1	Wastebasket, Stainless Steel, Half Moon Shape 12 gal; Open Top; Perforated Panel	floor	18"w x32"hx12"D	None
OPOI	3907	1	Computer With Dual Monitor, Wireless Keyboard & Mouse; TO BE SPECIFIED BY OWNER	desk top	TBD	E 115V; Data
OPOI	4102	1	Cabinet, Audio/Visual, Portable, For 1 PC & MONITOR; SPECS TBD BY I.T. DEPT/3RD PARTY VENDOR	floor	TBD By Design	E 115V Quad; Data/?Com
OPOI	4109	1	Microphone, Ceiling Hung; Poly Com or Comparable, for Meeting Rooms: SPECIFIED BY OWNER I.T. DEPT	ceiling	TBD BY I.T.	TBD
OPOI	4110	1	Cam, Web or Poly Com Cam for Meeting Rooms: TO SPECIFIED BY OWNER I.T. DEPT	wall mount	TBD BY I.T.	TBD
OPOI	4136	1	Television-Monitor, High Resolution Flat Panel, 55", WaMount; REQUIRES BACKING: SPEC BY OWNER	wall or ceiling	49.2"w x 29"h x 3.1"d	E 115V; Cabling; Data

OPOI	4149	1	Scheduling System for Conference Room areas; 7" monitor display to be mtd outside of mtg space	wall mount	8.07"w x5.12"h x2.6"d	POE

ARCH ROOM NO 1013

ROOM TITLE RELAXATION ROOM

GROUP	EQNO	QTY	DESCRIPTION	LOCATION	SIZE-STD	UTILITIES
OPVI	1027b	2	Seating, 1 Person, Upholstered: Club Style; Design Features TBD; LOBBY; NEROLI & TANGELO	floor	32"W 33.5"D 28.25"H	None
OPVI	1027d	2	Seating, 1 Person, Upholstered: Club Style; Design Features TBD; FABRIC; BITMAP & QUARRY	floor	32"W 33.5"D 28.25"H	None
OPVI	1206	2	Lamp, Floor, Decorator, 3 level bulb	floor	17" diam x 60"	E 115V
OPVI	1410a	2	Table, End, Drum Round 20" Diameter (Laminate: Mocha)	floor	20" Diameter x20"h	None
OPSVI	7114	1	YOGA Mat, Extra Thick, Foam, Easy Clean; PROVIDED & INSTALLED BY 3RD PARTY VENDOR	floor	Rolled Out 24"w x .5"d x 72"l	None

ARCH ROOM NO 1014

ROOM TITLE JANITORIAL, LEVEL 1

GROUP	EQNO	QTY	DESCRIPTION	LOCATION	SIZE-STD	UTILITIES
OPVI	2265	3	Shelving, Wall; 2 Stainless Steel shelfs for supply storage: REQUIRES BACKING	wall mounted	12"d x 36"w	None
OPOI	2609	1	Rack, Wall Mounted to hold mops, etc…WILL REQUIRE BACKING	wall	36"w x 1.5"d x 5"h	None
OPOI	3049	1	Mops, Mop Heads, Dust Mops, etc…for Janitorial Cleaning (FINISHING TOUCHES)	stored	VARIES	None
OPOI	3051	1	Vacuum, Upright; Commercial; with attachments (FINISHING TOUCHES)	floor/stored	18"w x 13"d x 44"h	E 120V
OPOI	3079	1	Bucket, Mop with ringer, Compact 26 Quart, on Casters, Yellow (FINISHING TOUCHES)	floor	15.6"w x 18.6"l x 16.7"h	None

ARCH ROOM NO 1015

ROOM TITLE STUDY GROUP 5

GROUP	EQNO	QTY	DESCRIPTION	LOCATION	SIZE-STD	UTILITIES
OPVI	0212a	10	Chair, Conference Type; MOLDED PLASTIC BACK & SEAT On Hard Casters For Carpet	floor	25.875"W 21.3125"D 32.625"H	None
OPVI	1005a	1	Chair, Side,MOLDED PLASTIC BACK & SEAT: HARD BLACK CASTERS FOR CARPET	floor	23"W 18.3125"D 32.625"H	None
CPCI	1054	1	Clock System, Synchronized; Analogue, With Second Hand; Sized Appropriate for Space; Control System	wall	VARIES	E; Low Voltage

OPVI	1403b	4	Table, Educational Type, Flip Top, Nesting w/Optional Casters	floor	72"l x24"d x30"h	Req Access To Floor Utilities
CPCI	2523	2	Board, Marker; Large for Stage Area/Conference Spaces; Wall Mounted	wall	8'w x 4'h x2"d	None
OPOI	2944	1	Telephone, Wall Mounted: TO BE SPECIFIED BY OWNER	wall	8x3X10	Comm.
OPVI	3043	1	Wastebasket, Stainless Steel, Half Moon Shape 12 gal; Open Top; Perforated Panel	floor	18"w x32"hx12"D	None
OPOI	3907	1	Computer With Dual Monitor, Wireless Keyboard & Mouse; TO BE SPECIFIED BY OWNER	desk top	TBD	E 115V; Data
OPOI	4102	1	Cabinet, Audio/Visual, Portable, For 1 PC & MONITOR; SPECS TBD BY I.T. DEPT/3RD PARTY VENDOR	floor	TBD By Design	E 115V Quad; Data/?Com
OPOI	4109	1	Microphone, Ceiling Hung; Poly Com or Comparable, for Meeting Rooms: SPECIFIED BY OWNER I.T. DEPT	ceiling	TBD BY I.T.	TBD
OPOI	4110	1	Cam, Web or Poly Com Cam for Meeting Rooms: TO SPECIFIED BY OWNER I.T. DEPT	wall mount	TBD BY I.T.	TBD
OPOI	4136	1	Television-Monitor, High Resolution Flat Panel, 55", WaMount; REQUIRES BACKING: SPEC BY OWNER	wall or ceiling	49.2"w x 29"h x 3.1"d	E 115V; Cabling; Data
OPOI	4149	1	Scheduling System for Conference Room areas; 7" monitor display to be mtd outside of mtg space	wall mount	8.07"w x5.12"h x2.6"d	POE

ARCH ROOM NO **1017**

ROOM TITLE **GYM; L1 S**

GROUP	EQNO	QTY	DESCRIPTION	LOCATION	SIZE-STD	UTILITIES
CPCI	1054	1	Clock System, Synchronized; Analogue, With Second Hand; Sized Appropriate for Space; Control System	wall	VARIES	E; Low Voltage
OPVI	3005	1	Cart, Linen, w/ 4 shelves, On Casters, With Bumper Guard & Cart Cover	floor	60"w x 24"d x 72"h	None
OPVI	3016	2	Hamper, Linen, Mobile, Space Saving Triangular Shape for Corners, Step On, SS	floor	18" x 18" x 18" TRIANGULAR	None
OPVI	3043	2	Wastebasket, Stainless Steel, Half Moon Shape 12 gal; Open Top; Perforated Panel	floor	18"w x32"hx12"D	None
CPCI	3130	2	Mirror, Full Wall Suitable for Exercise Areas	wall	TBD	None
OPOI	3909	1	Kiosk Center, Information; For IPAD DETAILS & COMPONENTS TO BE SPECIFIED BY OWNER I.T. DEPT	floor	TBD	E 115V; Data
OPOI	4105	1	Cabinet, Sound/Music System for Gym Area; SPECIFIED BY OWNER I.T. DEPT	floor	Typical: 48"w x 24"d x 36"h	To Be Near Power/Data

OPOI	4136a	1	Television-Monitor, High Resolution Flat Panel-55";CEILING MT REQ STRUCTURAL SUPPORT BY	ceiling	49.2"w x 29"h x 3.1"d	E 115V; Cabling; Data
OPOI	4228	1	First Aid Kit, Wall Mounted; SPECIFICATIONS BY OSU SAFETY DEPARTMENT: REQUIRES BACKING	wall mount	Typical 7" w x 7.5" h x 3" d	None
OPSVI	7112	2	Mats, Exercise, With Wall Hangers: Mats approx 4' x 7'; PROVIDED & INSTALLED BY 3RD PARTY VENDOR	floor/wall	48"w x 84"l x thickness TBD	None
OPSVI	7147	1	Weights, and Accessories TO BE SPECIFIED BY OWNER/PROVIDED BY 3RD PARTY VENDOR	STORED	VARIES	None
OPSVI	7170	1	Rack, Dumbell, 3 Tier Flat Tray, with Weights; SPECIFIED BY 3RD PARTY VENDOR (rack wt: 410 lbs)	floor	96.5"W x28.5"d x 46"h	None
OPSVI	7171	2	Trainer, Total Body Elliptical, with WIFI Connectivity; SPECIFIED BY 3RD PARTY VENDOR (445 lbs)	floor	70"L X 29.2"W X68.5"H	E 120V; Data
OPSVI	7172	2	Climber, Step (ClimbMill), with WIFI Connectivity; SPECIFIED BY 3RD PARTY VENDOR (377 lbs)	floor	65"L x 40.3"W x 83.5"H	E 120V; Data
OPSVI	7173	2	Cycle, Recumbent, with WIFI Connectivity; SPECIFIED BY 3RD PARTY VENDOR (196.3 lbs)	floor	59.2"L x25.7"W x55/1"H	E 120V; Data
OPSVI	7174	4	Treadmill, with WIFI Connectivity; SPECIFIED BY 3RD PARTY VENDOR (399 lbs)	floor	84.6"L x36.5"W x63.5"H	E 20 amp Dedicated; nonlooped grounded; Data
OPSVI	7175	2	Cycle, Upright, with WIFI Connectivity; SPECIFIED BY 3RD PARTY VENDOR (193.5 lbs)	floor	51.5"L x25.7"W x60.5"H	E 120V; Data
OPSVI	7176	1	Bench, Flat: Workout; Integrated Foot Supports, Wheels; SPECIFIED BY 3RD PARTY VENDOR (57 lbs)	floor	61.5"L x27"W x16.9"H	None
OPSVI	7177	1	Trainer, Functional; Swivelling access station; SPECIFIED BY 3RD PARTY VENDOR (1324 lbs)	floor	66.6"L x 51.2"W x92.3"H	E 120V; Data
OPSVI	7178	1	Lat Pulldown/Seated Row Unit; SPECIFIED BY 3RD PARTY VENDOR (613 lbs)	floor	71.1"L x62.2"W x89.1"H	E 120V; Data
OPSVI	7179	1	Leg Press; SPECIFIED BY 3RD PARTY VENDOR (795 lbs)	floor	91.5"L x40.3"W x65.8"H	E 120V; Data
OPSVI	7180	1	Half, Mega; Open front design; Adj Safety Bars; SPECIFIED BY 3RD PARTY VENDOR (622 lbs)	floor	67.5"L x81.5"W x97"H	E 120V; Data
OPSVI	7181	1	Bench, Multi Adjustable; LP; SPECIFIED BY 3RD PARTY VENDOR (121.5 lbs)	floor	59.7"L x30.6"W x17.8"H	None
OPSVI	7182	1	Press, Multi; SPECIFIED BY 3RD PARTY VENDOR (590 lbs)	floor	60.7"L x61.9"W x78.7"H	E 120V; Data
OPSVI	7183	1	Bench, Utility; Back Angle 85 degrees; SPECIFIED BY 3RD PARTY VENDOR (60 lbs)	floor	46.8"L x29.9"W x37.9"H	None

OPSVI	7184	1	Bench, Decline; SPECIFIED BY 3RD PARTY VENDOR	floor	TBD	None
OPOI	8202	1	Defibrillator, External, Automated (AED) With Accessories	Stored	16"w x 14.75"h x8.5"d	None
CPCI	8202a	1	Cabinet, SEMI Recessed AED; Stainless Steel battery alarm/safety clasp/optional custom logo	recessed wall	wall opening 15.25"w x15.25"h x3.75"d	None

ARCH ROOM NO 1018

ROOM TITLE LOCKER ROOM-Toilet-Shower; GYM AREA

GROUP	EQNO	QTY	DESCRIPTION	LOCATION	SIZE-STD	UTILITIES
CPCI	1805	1	Mirror, Dressing (Style & Size TBD)	wall	18x.5x60	None
OPVI	3016	1	Hamper, Linen, Mobile, Space Saving Triangular Shape for Corners, Step On, SS	floor	18" x 18" x 18" TRIANGULAR	None
OPVI	3043c	1	Waste Container, Drop in Top, Suitable for Restroom Areas, 15 gallon, Textured Black	floor	15" diameter x 30"h	None
OPOI	3088b	1	Container, Sharps: Wall Mounted, Lockable	Wall mount	10 1/2"W x 4 1/2"D x 12"H	None
OPOI	3100	2	Dispenser, Paper Towel: TYPE TBD ? BY OWNER-CURRENT JANITORIAL SERVICE	wall mount	TBD	None
OPOI	3102	2	Dispenser, Soap: SPECIFICATIONS & Type TBD BY OWNER	wall mount	7"w x4"d x11.5"h	None
OPOI	3102c	1	Dispenser, Dual Container, Shower Liquid Shampoo &/or Soap	shower wall mt	9.7"w x5.3"l x9.6"h	None
CPCI	3115	2	Robe Hook, Double	wall	6x6x3	None
CPCI	3121	1	Shelf, Towel with Towel Bar, Stainless Steel; 8"d x 18"w	wall	18"w x 8" d x 6"h	None
CPCI	9993	1	Track, Cubicle Privacy Curtain, of Appropriate Size & fabric type	ceiling	as required-see layout	None:
OPVI	9997	1	Bench, Sitting Suitable for Showering Area (water-proof) TEAK	floor	36"W X 17.5D X 17.5"H	None

ARCH ROOM NO 1019

ROOM TITLE LOCKER ROOM-Toilet-Shower; GYM AREA

GROUP	EQNO	QTY	DESCRIPTION	LOCATION	SIZE-STD	UTILITIES
CPCI	1805	1	Mirror, Dressing (Style & Size TBD)	wall	18x.5x60	None
OPVI	3016	1	Hamper, Linen, Mobile, Space Saving Triangular Shape for Corners, Step On, SS	floor	18" x 18" x 18" TRIANGULAR	None

OPVI	3043c	1	Waste Container, Drop in Top, Suitable for Restroom Areas, 15 gallon, Textured Black	floor	15" diameter x 30"h	None
OPOI	3088b	1	Container, Sharps: Wall Mounted, Lockable	Wall mount	10 1/2"W x 4 1/2"D x 12"H	None
OPOI	3100	2	Dispenser, Paper Towel: TYPE TBD ? BY OWNER-CURRENT JANITORIAL SERVICE	wall mount	TBD	None
OPOI	3102	2	Dispenser, Soap: SPECIFICATIONS & Type TBD BY OWNER	wall mount	7"w x4"d x11.5"h	None
OPOI	3102c	1	Dispenser, Dual Container, Shower Liquid Shampoo &/or Soap	shower wall mt	9.7"w x5.3"l x9.6"h	None
CPCI	3115	2	Robe Hook, Double	wall	6x6x3	None
CPCI	3121	1	Shelf, Towel with Towel Bar, Stainless Steel; 8"d x 18"w	wall	18"w x 8" d x 6"h	None
CPCI	9993	1	Track, Cubicle Privacy Curtain, of Appropriate Size & fabric type	ceiling	as required-see layout	None:
OPVI	9997	1	Bench, Sitting Suitable for Showering Area (water-proof) TEAK	floor	36"W X 17.5D X 17.5"H	None

ARCH ROOM NO **1020**

ROOM TITLE **TOILET L1 S**

GROUP	EQNO	QTY	DESCRIPTION	LOCATION	SIZE-STD	UTILITIES
OPVI	3043c	1	Waste Container, Drop in Top, Suitable for Restroom Areas, 15 gallon, Textured Black	floor	15" diameter x 30"h	None
OPOI	3100	1	Dispenser, Paper Towel: TYPE TBD ? BY OWNER-CURRENT JANITORIAL SERVICE	wall mount	TBD	None
OPOI	3102	1	Dispenser, Soap: SPECIFICATIONS & Type TBD BY OWNER	wall mount	7"w x4"d x11.5"h	None
CPCI	3115	1	Robe Hook, Double	wall	6x6x3	None

ARCH ROOM NO **1021**

ROOM TITLE **STORAGE, GENERAL L1**

GROUP	EQNO	QTY	DESCRIPTION	LOCATION	SIZE-STD	UTILITIES
OOOO	9999a	0	No Moveable Equipment Required	n/a	n/a	n/a

ARCH ROOM NO **1022**

ROOM TITLE **TOILET L1 S**

GROUP	EQNO	QTY	DESCRIPTION	LOCATION	SIZE-STD	UTILITIES

OPVI	3043c	1	Waste Container, Drop in Top, Suitable for Restroom Areas, 15 gallon, Textured Black	floor	15" diameter x 30"h	None
OPOI	3100	1	Dispenser, Paper Towel: TYPE TBD ? BY OWNER-CURRENT JANITORIAL SERVICE	wall mount	TBD	None
OPOI	3102	1	Dispenser, Soap: SPECIFICATIONS & Type TBD BY OWNER	wall mount	7"w x4"d x11.5"h	None
CPCI	3115	1	Robe Hook, Double	wall	6x6x3	None

ARCH ROOM NO **1023**

ROOM TITLE **TOILET L1 S**

GROUP	EQNO	QTY	DESCRIPTION	LOCATION	SIZE-STD	UTILITIES
OPVI	3043c	1	Waste Container, Drop in Top, Suitable for Restroom Areas, 15 gallon, Textured Black	floor	15" diameter x 30"h	None
OPOI	3100	1	Dispenser, Paper Towel: TYPE TBD ? BY OWNER-CURRENT JANITORIAL SERVICE	wall mount	TBD	None
OPOI	3102	1	Dispenser, Soap: SPECIFICATIONS & Type TBD BY OWNER	wall mount	7"w x4"d x11.5"h	None
CPCI	3115	1	Robe Hook, Double	wall	6x6x3	None

ARCH ROOM NO **1024**

ROOM TITLE **STUDY GROUP 3; L1 S**

GROUP	EQNO	QTY	DESCRIPTION	LOCATION	SIZE-STD	UTILITIES
OPVI	0212a	10	Chair, Conference Type; MOLDED PLASTIC BACK & SEAT On Hard Casters For Carpet	floor	25.875"W 21.3125"D 32.625"H	None
OPVI	1005a	1	Chair, Side,MOLDED PLASTIC BACK & SEAT: HARD BLACK CASTERS FOR CARPET	floor	23"W 18.3125"D 32.625"H	None
CPCI	1054	1	Clock System, Synchronized; Analogue, With Second Hand; Sized Appropriate for Space; Control System	wall	VARIES	E; Low Voltage
OPVI	1403b	4	Table, Educational Type, Flip Top, Nesting w/Optional Casters	floor	72"l x24"d x30"h	Req Access To Floor Utilities
CPCI	2523	2	Board, Marker; Large for Stage Area/Conference Spaces; Wall Mounted	wall	8'w x 4'h x2"d	None
OPOI	2944	1	Telephone, Wall Mounted: TO BE SPECIFIED BY OWNER	wall	8x3X10	Comm.
OPVI	3043	1	Wastebasket, Stainless Steel, Half Moon Shape 12 gal; Open Top; Perforated Panel	floor	18"w x32"hx12"D	None
OPOI	3907	1	Computer With Dual Monitor, Wireless Keyboard & Mouse; TO BE SPECIFIED BY OWNER	desk top	TBD	E 115V; Data

OPOI	4102	1	Cabinet, Audio/Visual, Portable, For 1 PC & MONITOR; SPECS TBD BY I.T. DEPT/3RD PARTY VENDOR	floor	TBD By Design	E 115V Quad; Data/?Com
OPOI	4109	1	Microphone, Ceiling Hung; Poly Com or Comparable, for Meeting Rooms: SPECIFIED BY OWNER I.T. DEPT	ceiling	TBD BY I.T.	TBD
OPOI	4110	1	Cam, Web or Poly Com Cam for Meeting Rooms: TO SPECIFIED BY OWNER I.T. DEPT	wall mount	TBD BY I.T.	TBD
OPOI	4136	1	Television-Monitor, High Resolution Flat Panel, 55", WaMount; REQUIRES BACKING: SPEC BY OWNER	wall or ceiling	49.2"w x 29"h x 3.1"d	E 115V; Cabling; Data
OPOI	4149	1	Scheduling System for Conference Room areas; 7" monitor display to be mtd outside of mtg space	wall mount	8.07"w x5.12"h x2.6"d	POE

ARCH ROOM NO **1025**

ROOM TITLE **STUDY GROUP 2; L1 S**

GROUP	EQNO	QTY	DESCRIPTION	LOCATION	SIZE-STD	UTILITIES
OPVI	0212a	10	Chair, Conference Type; MOLDED PLASTIC BACK & SEAT On Hard Casters For Carpet	floor	25.875"W 21.3125"D 32.625"H	None
OPVI	1005a	1	Chair, Side,MOLDED PLASTIC BACK & SEAT: HARD BLACK CASTERS FOR CARPET	floor	23"W 18.3125"D 32.625"H	None
CPCI	1054	1	Clock System, Synchronized; Analogue, With Second Hand; Sized Appropriate for Space; Control System	wall	VARIES	E; Low Voltage
OPVI	1403b	4	Table, Educational Type, Flip Top, Nesting w/Optional Casters	floor	72"l x24"d x30"h	Req Access To Floor Utilities
CPCI	2523	2	Board, Marker; Large for Stage Area/Conference Spaces; Wall Mounted	wall	8'w x 4'h x2"d	None
OPOI	2944	1	Telephone, Wall Mounted: TO BE SPECIFIED BY OWNER	wall	8x3X10	Comm.
OPVI	3043	1	Wastebasket, Stainless Steel, Half Moon Shape 12 gal; Open Top; Perforated Panel	floor	18"w x32"hx12"D	None
OPOI	3907	1	Computer With Dual Monitor, Wireless Keyboard & Mouse; TO BE SPECIFIED BY OWNER	desk top	TBD	E 115V; Data
OPOI	4102	1	Cabinet, Audio/Visual, Portable, For 1 PC & MONITOR; SPECS TBD BY I.T. DEPT/3RD PARTY VENDOR	floor	TBD By Design	E 115V Quad; Data/?Com
OPOI	4109	1	Microphone, Ceiling Hung; Poly Com or Comparable, for Meeting Rooms: SPECIFIED BY OWNER I.T. DEPT	ceiling	TBD BY I.T.	TBD
OPOI	4110	1	Cam, Web or Poly Com Cam for Meeting Rooms: TO SPECIFIED BY OWNER I.T. DEPT	wall mount	TBD BY I.T.	TBD
OPOI	4136	1	Television-Monitor, High Resolution Flat Panel, 55", WaMount; REQUIRES BACKING: SPEC BY OWNER	wall or ceiling	49.2"w x 29"h x 3.1"d	E 115V; Cabling; Data

OPOI	4149	1	Scheduling System for Conference Room areas; 7" monitor display to be mtd outside of mtg space	wall mount	8.07"w x5.12"h x2.6"d	POE

ARCH ROOM NO **1026**

ROOM TITLE **CLASSROOM, LARGE LL2 S**

GROUP	EQNO	QTY	DESCRIPTION	LOCATION	SIZE-STD	UTILITIES
OPVI	0212a	50	Chair, Conference Type; MOLDED PLASTIC BACK & SEAT On Hard Casters For Carpet	floor	25.875"W 21.3125"D 32.625"H	None
OPVI	1005a	4	Chair, Side,MOLDED PLASTIC BACK & SEAT: HARD BLACK CASTERS FOR CARPET	floor	23"W 18.3125"D 32.625"H	None
CPCI	1054	1	Clock System, Synchronized; Analogue, With Second Hand; Sized Appropriate for Space; Control System	wall	VARIES	E; Low Voltage
OPVI	1329	1	Stool, Bar; Static; with low profile back; no arms; small scale; Fabric: Bitmap-Sienna	floor	18.75"w x 23.75"d x 30.25"h	None
OPVI	1424a	4	Table Educational LEC; Access to Power/data/etc…:Laminate Asian Knight; Black Grommet & Power	floor	72" diameter x 30"h	Power/USB/Data
OPVI	1424b	2	Table Educational LEC; Access to Power/data/etc…:Laminate Asian Knight; Black Grommet & Power	floor	84" diameter x 30"h	Power/USB/Data
CPCI	2518	8	Board, Marker, Magnetic Cleanable Surface,w/Tray, 48" x 48" x 1"d	wall	48"w x48"h x1"d	None
OPOI	2941	1	Telephone, Standard Desk: TO BE SPECIFIED BY OWNER	desktop	10"D X 8"W X 4"H	Data-Com
OPVI	3043e	2	Waste Container, Drop in Top, 25 Gallons, SS, RM Classic Series; Perforated	floor	18" diameter x 36"h	None
OPOI	3907	1	Computer With Dual Monitor, Wireless Keyboard & Mouse; TO BE SPECIFIED BY OWNER	desk top	TBD	E 115V; Data
OPOI	4103	1	Podium, Cabinet, Audio/Visual, Portable, For Up TO 2 PC & DUAL MONITOR; SPECS BY I.T. DEPT/3RD	floor	TBD By Design	E 115V Quad; 2 Data/?Com
OPOI	4108	1	Camera, Document for Classrooms: SPECS BY OWNER I.T. DEPT	Sits on 4103	11.7"w x19"d x18.8"h	E 115V, Data
OPOI	4109	1	Microphone, Ceiling Hung; Poly Com or Comparable, for Meeting Rooms: SPECIFIED BY OWNER I.T. DEPT	ceiling	TBD BY I.T.	TBD
OPOI	4110	1	Cam, Web or Poly Com Cam for Meeting Rooms: TO SPECIFIED BY OWNER I.T. DEPT	wall mount	TBD BY I.T.	TBD
OPOI	4131a	2	Television Monitor, Flat Panel, 65"; Ceiling Mount; REQ STRUCTURAL SUPPORT; I.T. & 3RD PARTY	ceiling mt	57.6"w x 2.5"d x 33.2"h	E 115V; Data
OPOI	4136	6	Television-Monitor, High Resolution Flat Panel, 55", WaMount; REQUIRES BACKING: SPEC BY OWNER	wall or ceiling	49.2"w x 29"h x 3.1"d	E 115V; Cabling; Data

OPOI	4149	1	Scheduling System for Conference Room areas; 7" monitor display to be mtd outside of mtg space	wall mount	8.07"w x5.12"h x2.6"d	POE

ARCH ROOM NO **1027**

ROOM TITLE **STUDY GROUP 1; L1 S**

GROUP	EQNO	QTY	DESCRIPTION	LOCATION	SIZE-STD	UTILITIES
OPVI	0212a	10	Chair, Conference Type; MOLDED PLASTIC BACK & SEAT On Hard Casters For Carpet	floor	25.875"W 21.3125"D 32.625"H	None
CPCI	1054	1	Clock System, Synchronized; Analogue, With Second Hand; Sized Appropriate for Space; Control System	wall	VARIES	E; Low Voltage
OPVI	1403b	4	Table, Educational Type, Flip Top, Nesting w/Optional Casters	floor	72"l x24"d x30"h	Req Access To Floor Utilities
CPCI	2523	2	Board, Marker; Large for Stage Area/Conference Spaces; Wall Mounted	wall	8'w x 4'h x2"d	None
OPOI	2944	1	Telephone, Wall Mounted: TO BE SPECIFIED BY OWNER	wall	8x3X10	Comm.
OPVI	3043	1	Wastebasket, Stainless Steel, Half Moon Shape 12 gal; Open Top; Perforated Panel	floor	18"w x32"hx12"D	None
OPOI	3903	1	Computer,Personal & Monitor, Wireless Keyboard & Mouse for Desk Use: TO BE SPECIFIED BY OWNER	desktop	24"w x 18"d x 22"h	E 115V; Data
OPOI	4102	1	Cabinet, Audio/Visual, Portable, For 1 PC & MONITOR; SPECS TBD BY I.T. DEPT/3RD PARTY VENDOR	floor	TBD By Design	E 115V Quad; Data/?Com
OPOI	4109	1	Microphone, Ceiling Hung; Poly Com or Comparable, for Meeting Rooms: SPECIFIED BY OWNER I.T. DEPT	ceiling	TBD BY I.T.	TBD
OPOI	4110	1	Cam, Web or Poly Com Cam for Meeting Rooms: TO SPECIFIED BY OWNER I.T. DEPT	wall mount	TBD BY I.T.	TBD
OPOI	4136	1	Television-Monitor, High Resolution Flat Panel, 55", WaMount; REQUIRES BACKING: SPEC BY OWNER	wall or ceiling	49.2"w x 29"h x 3.1"d	E 115V; Cabling; Data
OPOI	4149	1	Scheduling System for Conference Room areas; 7" monitor display to be mtd outside of mtg space	wall mount	8.07"w x5.12"h x2.6"d	POE

ARCH ROOM NO **1031**

ROOM TITLE **CORRIDOR, SIMMULATION**

GROUP	EQNO	QTY	DESCRIPTION	LOCATION	SIZE-STD	UTILITIES
OPVI	3043	2	Wastebasket, Stainless Steel, Half Moon Shape 12 gal; Open Top; Perforated Panel	floor	18"w x32"hx12"D	None
OPOI	3104	6	Dispenser, Soap, FOOT OPERATED, TO BE CONFIGURED INTO THE SCRUB SINK	N/A	N/A	TBD
CPCI	3133	2	Shelf, Stainless Steel, of appropriate length & depth, INTEGRATE INTO SCRUB SINK CONFIGURATION	wall	TBD	None

OPOI	9856	1	Wheelchair,Folding,Adult,Upholstered Seat & Back	floor	24x30x42	None

ARCH ROOM NO **1032**

ROOM TITLE **SIMMULATION ROOM, MEDICAL SURGICAL**

GROUP	EQNO	QTY	DESCRIPTION	LOCATION	SIZE-STD	UTILITIES
OPVI	1005b	1	Chair, Side, No Arms, Vinyl Upholstery; SOFT BLACK CASTERS FOR HARD FLOORING	floor	23"W 18.3125"D 32.625"H	None
CPCI	1054	1	Clock System, Synchronized; Analogue, With Second Hand; Sized Appropriate for Space; Control System	wall	VARIES	E; Low Voltage
OPVI	1335a	1	Stool, No Backrest, Foot ring, Soft Casters For Hard Flooring, Pneumatic Adj. Ht.	floor	Typical 18"w x 16"d or 16" diameter	None
OPOI	2522	1	Board, Marker, On Mobile Base, Cleanable Surface	floor	24.4" diameter base	None
OPOI	2944	1	Telephone, Wall Mounted: TO BE SPECIFIED BY OWNER	wall	8x3X10	Comm.
OPVI	3016	1	Hamper, Linen, Mobile, Space Saving Triangular Shape for Corners, Step On, SS	floor	18" x 18" x 18" TRIANGULAR	None
OPVI	3040b	1	Wastebasket, END Step-On,Plastic,Rectangular, 24 gallon, Colors: SS with Black Trim	floor	22.5"w x 12.5"d x 28.75"h	None
OPVI	3041	1	Wastebasket, Step-On,Plastic,Rectangular, Red/Bio Hazard 8 gallon	floor	16.26"W x15.75"D x17.25"H	None
OPOI	3088b	1	Container, Sharps: Wall Mounted, Lockable	Wall mount	10 1/2"W x 4 1/2"D x 12"H	None
OPOI	3089	1	Dispenser, Quad Glove Box: finish options to be selected; Vertical or Horizontal Mount	wall mount	24"w x 12"h x 6"d	None
OPOI	3100	1	Dispenser, Paper Towel: TYPE TBD ? BY OWNER-CURRENT JANITORIAL SERVICE	wall mount	TBD	None
OPOI	3102a	1	Dispenser, Waterless Hand Sanitizer	wall	TBD	None
CPCI	3102b	1	Dispenser, Soap; Horizontal, ADA, 40 Oz liquid soap capacity, SS,	wall	8 3/16"w x2 7/8"d x4 13/16"h	None
CPCI	3175	1	Medical Gases, Piped w/Outlets To Be Located for HEADWALL Access; HORIZONTAL	ceiling/wall	Varies	Med.Gases
OPOI	3902	1	Workstation On Wheels; With Basket; Top To accommodate portable equipment/laptops/etc…	floor	18"w x 20"d x 42"h	E 115V for Charging
OPOI	3908	1	Computer, ALL IN ONE: TO MEET EMS STANDARDS & SPECIFICATIONS BY OWNER I.T.	counter/stored	N/A	E 115V; Data-Com

OPOI	4133	1	TV, Flat Panel, LED, 49" : 4 Ultra HD; Wall Mount: OWNER TO SPECIFY; REQUIRES BACKING	wall mount	43.1"w x 24.9"h x 2.5 "d	E 115V; Data
OPOI	5824g	1	Ultrasound Unit, Can be Hand Carried Battery Operated; SONOSITE EDGE II:REFER TO OWNER PROVIDED	stored	12.1"w x 12.8"l x 2.5"h	E 115V for charging
CPSVI	7315	2	Medical Air Flowmeter: Latch Key Chemetron Style Quick Connect: With accessories	stored	stored/attached	Medical Air
CPSVI	7316	2	Oxygen Flowmeter: Latch Key Chemetron Style Quick Connect; With accessories	stored	stored/attached	Medical Air
CPSVI	7317	2	Vacuum Regulator: Latch Key Chemetron Style Quick Connect ; With accessories	Stored	stored/attached	Medical Vacuum
OPOI	8066	1	Bed, Hospital Patient, Standard, Hi/Lo, Electric with Mattress, Go Bed II by Stryker	floor	94.25l x40"w x14.5-29"ht	E 120V; Hospital Grade Plug
OPOI	8160	1	Cart, Emergency; 6 drawer; ADULT with supplies & accessories	floor	29"w x24.5"d x46.5"h	E 115V for charging equipment on cart
OPOI	8166	1	Cart, Procedures Set Up, 7 Drawer with basic electronic pushbutton lock	floor	23"w x25"d x40"h	None
CPSVCI	8403c	1	Headwall, Patient Service, One Bed with accessories for mounting equipment; 2 Mock EA; O2, Air, Vac	wall/floor	See Details	See Mfg Design for Multiple Power/Data
CPSVCI	8407	1	Locator, Bed; With Multiple Power, Data, USB,	wall	See Mfg Design	None
OPOI	8705	1	Monitor, Defibrillator, 12 Lead ECG & Vital Signs; BP, Pulse, SPO2, Resp; Place on #8160 Cart	cart	14"w x 12"d x 12"h	E 115V; Data/Com
OPOI	8801	1	Pump, Infusion; SPECIFICATIONS BY OWNER; UNIT CAN BE MOUNTED TO IV STAND	stored	20diam x65	E 115V(recharging)
OPOI	9241	1	Stool, Rubber Foot Stool Platform, Single Step, Non Skid, 300# Capacity, Steel Construction	floor	14"w x11"d x9" step	None
OPOI	9299	1	Stand, IV, with 4 Rams Horn Hooks, 5 legged, mobile	floor	16" diameter	None
OPOI	9301b	1	Stand, Mayo, Removable Tray,Adj.Ht.With Claw Foot Mobile Base	floor	18" Square Base: 19.5" x 12.5" tray	None
OPOI	9304a	1	Table, Overbed, Adjustable Height, with tray/Mirror Section	floor	21.25"w x 32"l x adj ht	None
CPCI	9993	1	Track, Cubicle Privacy Curtain, of Appropriate Size & fabric type	ceiling	as required-see layout	None:

ARCH ROOM NO **1033**

ROOM TITLE **CUBBIES, SIM AREA**

GROUP	EQNO	QTY	DESCRIPTION	LOCATION	SIZE-STD	UTILITIES

OPVI	3043	1	Wastebasket, Stainless Steel, Half Moon Shape 12 gal; Open Top; Perforated Panel	floor	18"w x32"hx12"D	None
OPOI	3102a	1	Dispenser, Waterless Hand Sanitizer	wall	TBD	None

ARCH ROOM NO **1034**

ROOM TITLE **CONTROL ROOM, MEDICAL SURGICAL**

GROUP	EQNO	QTY	DESCRIPTION	LOCATION	SIZE-STD	UTILITIES
OPVI	0150f	1	Chair, Rotary,Std.Back,5-Legged,Ergonomic,Adj.Short Arms: FUTURE PURCHASE	floor	Typical 24.5w x28"d x37"h	None
OPVI	0181	2	Chair, Rotary,Std.Back, Hard BLACK Casters for Carpet Floors, NO Arms, Ext Ht For Stdg Work Surface	floor	27.5"W 27.5"D 37.5-47 ¾"H	None
CPCI	1054	1	Clock System, Synchronized; Analogue, With Second Hand; Sized Appropriate for Space; Control System	wall	VARIES	E; Low Voltage
OPOI	1079f	1	Desk, Single Pedestal, Pencil/Storage/File Drawer (FUTURE PURCHASE)	floor	72X78"l x "d x 30"h	None
CPCI	2517	1	Board, Marker, Magnetic Cleanable Surface,w/Tray, 18"w x 24"h x 1"d	wall	18"w x 24"h x 1"d	None
OPOI	2941f	1	Telephone, Standard: FUTURE PLACEMENT	desktop	10"D X 8"W X 4"H	Data-Com
OPOI	2944	1	Telephone, Wall Mounted: TO BE SPECIFIED BY OWNER	wall	8x3X10	Comm.
OPVI	3039a	1	Wastebasket, Rectangular, plastic, water/fire resistant,28qt	floor	14lx11wx16h	None
OPVI	3039f	1	Wastebasket, Rectangular, plastic, water/fire resistant,28qt	floor	14lx11wx16h	None
CPCI	3115	1	Robe Hook, Double	wall	6x6x3	None
OPOI	3907s	2	Computer With Dual Monitor, Wireless Keyboard & Mouse; TO MEET EMS STANDARDS & BE SPECIFIED BY	desk top	TBD	E 115V; Data-Com
OPOI	3907z	1	Computer With Dual Monitor, Wireless Keyboard & Mouse; FUTURE PURCHASE:TO BE SPECIFIED BY	desk top	TBD	E 115V; Data-Com
OPVI	3940	3	Keyboard Tray: Black	under desk	22" TRACK	None

ARCH ROOM NO **1035**

ROOM TITLE **OBSERVATION ROOM, MEDICAL SURGICAL**

GROUP	EQNO	QTY	DESCRIPTION	LOCATION	SIZE-STD	UTILITIES
OPVI	0182	5	Chair, Molded Plastic Back & Upholstered Seat 4-Leg-Static, Partial Arm, For Stdg Ht Counters	floor	25 7/8"W x 21 5/16"D x 29.75'H	None

CPCI	1054	1	Clock System, Synchronized; Analogue, With Second Hand; Sized Appropriate for Space; Control System	wall	VARIES	E; Low Voltage
OPVI	3043	1	Wastebasket, Stainless Steel, Half Moon Shape 12 gal; Open Top; Perforated Panel	floor	18"w x32"hx12"D	None

ARCH ROOM NO 1036

ROOM TITLE ALCOVE, MEDICATION (BETWEEN ER & MED SURGE)

GROUP	EQNO	QTY	DESCRIPTION	LOCATION	SIZE-STD	UTILITIES
OPVI	3062b	1	Wastebasket, Office,Tall, 23 gallon, Open Top; COLOR: GRAY	floor	11"w x 22"d x 30"h	None
OPSVI	5030	1	Controlled Dispensing System, 6 Drawer Main + 7 Drawer Auxillary Cabinet + Single Column Auxillary	floor	76.6"w x28"d+5" clearance x79.5"h	E Ded 115V Quad; x2 Data Com

ARCH ROOM NO 1037

ROOM TITLE DEBRIEF, SIM 1

GROUP	EQNO	QTY	DESCRIPTION	LOCATION	SIZE-STD	UTILITIES
OPVI	0212a	10	Chair, Conference Type; MOLDED PLASTIC BACK & SEAT On Hard Casters For Carpet	floor	25.875"W 21.3125"D 32.625"H	None
OPVI	1005a	2	Chair, Side,MOLDED PLASTIC BACK & SEAT: HARD BLACK CASTERS FOR CARPET	floor	23"W 18.3125"D 32.625"H	None
CPCI	1054	1	Clock System, Synchronized; Analogue, With Second Hand; Sized Appropriate for Space; Control System	wall	VARIES	E; Low Voltage
OPVI	1403g	4	Table, Conference Type, Flip-Top, Nesting	floor	54"l x24"d x30"h	Req Access To Floor Utilities
CPCI	2523	1	Board, Marker; Large for Stage Area/Conference Spaces; Wall Mounted	wall	8'w x 4'h x2"d	None
OPOI	2945	1	Telephone, Conference: TO BE SPECIFIED BY OWNER	desktop	14X13X3	E 115V; Data-Com
OPVI	3043	2	Wastebasket, Stainless Steel, Half Moon Shape 12 gal; Open Top; Perforated Panel	floor	18"w x32"hx12"D	None
OPOI	3907	1	Computer With Dual Monitor, Wireless Keyboard & Mouse; TO BE SPECIFIED BY OWNER	desk top	TBD	E 115V; Data
OPOI	4103	1	Podium, Cabinet, Audio/Visual, Portable, For Up TO 2 PC & DUAL MONITOR; SPECS BY I.T. DEPT/3RD	floor	TBD By Design	E 115V Quad; 2 Data/?Com
OPOI	4109	1	Microphone, Ceiling Hung; Poly Com or Comparable, for Meeting Rooms: SPECIFIED BY OWNER I.T. DEPT	ceiling	TBD BY I.T.	TBD
OPOI	4110	1	Cam, Web or Poly Com Cam for Meeting Rooms: TO SPECIFIED BY OWNER I.T. DEPT	wall mount	TBD BY I.T.	TBD
OPOI	4130	1	Television, Flat Panel Monitor, 82" screen; Wall Mount REQUIRES BACKING; SPECS BY OWNER I.T.	wall mount	TYPICAL:72"w x 2.4"d x 45.1"h	E 115V; Data

ARCH ROOM NO 1038

ROOM TITLE CONTROL ROOM & OBSERVATION, EMERGENCY

GROUP	EQNO	QTY	DESCRIPTION	LOCATION	SIZE-STD	UTILITIES
OPVI	0150f	1	Chair, Rotary,Std.Back,5-Legged,Ergonomic,Adj.Short Arms: FUTURE PURCHASE	floor	Typical 24.5w x28"d x37"h	None
OPVI	0181a	3	Chair, Rotary, Std.Back,Hard BLACK Casters for Carpet Floors WITH Arms, Ext Ht For Stdg Work Surface	floor	27.5"W 27.5"D 37.5-47 ¾"H	None
CPCI	1054	1	Clock System, Synchronized; Analogue, With Second Hand; Sized Appropriate for Space; Control System	wall	VARIES	E; Low Voltage
OPOI	1079f	1	Desk, Single Pedestal, Pencil/Storage/File Drawer (FUTURE PURCHASE)	floor	72X78"l x "d x 30"h	None
CPCI	2517	1	Board, Marker, Magnetic Cleanable Surface,w/Tray, 18"w x 24"h x 1"d	wall	18"w x 24"h x 1"d	None
OPOI	2941f	1	Telephone, Standard: FUTURE PLACEMENT	desktop	10"D X 8"W X 4"H	Data-Com
OPOI	2944	1	Telephone, Wall Mounted: TO BE SPECIFIED BY OWNER	wall	8x3X10	Comm.
OPVI	3039a	3	Wastebasket, Rectangular, plastic, water/fire resistant,28qt	floor	14lx11wx16h	None
OPVI	3039f	1	Wastebasket, Rectangular, plastic, water/fire resistant,28qt	floor	14lx11wx16h	None
CPCI	3115	2	Robe Hook, Double	wall	6x6x3	None
OPOI	3907s	2	Computer With Dual Monitor, Wireless Keyboard & Mouse; TO MEET EMS STANDARDS & BE SPECIFIED BY	desk top	TBD	E 115V; Data-Com
OPOI	3907z	1	Computer With Dual Monitor, Wireless Keyboard & Mouse; FUTURE PURCHASE:TO BE SPECIFIED BY	desk top	TBD	E 115V; Data-Com
OPVI	3940	2	Keyboard Tray: Black	under desk	22” TRACK	None

ARCH ROOM NO 1040

ROOM TITLE SIMMULATION ROOM, EMERGENCY

GROUP	EQNO	QTY	DESCRIPTION	LOCATION	SIZE-STD	UTILITIES
OPVI	1335a	2	Stool, No Backrest, Foot ring, Soft Casters For Hard Flooring, Pneumatic Adj. Ht.	floor	Typical 18"w x 16"d or 16" diameter	None
OPOI	2522	1	Board, Marker, On Mobile Base, Cleanable Surface	floor	24.4" diameter base	None
CPCI	2524	1	Board, Marker; Cleanable Surface; SPECIAL SIZE REQUEST 3' x 3'	wall	36"w X 36"h X 1"D	None

OPOI	2944	1	Telephone, Wall Mounted: TO BE SPECIFIED BY OWNER	wall	8x3X10	Comm.
OPVI	3016	1	Hamper, Linen, Mobile, Space Saving Triangular Shape for Corners, Step On, SS	floor	18" x 18" x 18" TRIANGULAR	None
OPVI	3041	1	Wastebasket, Step-On,Plastic,Rectangular, Red/Bio Hazard 8 gallon	floor	16.26"W x15.75"D x17.25"H	None
OPVI	3062b	1	Wastebasket, Office,Tall, 23 gallon, Open Top; COLOR: GRAY	floor	11"w x 22"d x 30"h	None
OPOI	3088b	2	Container, Sharps: Wall Mounted, Lockable	Wall mount	10 1/2"W x 4 1/2"D x 12"H	None
OPOI	3089	2	Dispenser, Quad Glove Box: finish options to be selected; Vertical or Horizontal Mount	wall mount	24"w x 12"h x 6"d	None
OPOI	3100	1	Dispenser, Paper Towel: TYPE TBD ? BY OWNER-CURRENT JANITORIAL SERVICE	wall mount	TBD	None
OPOI	3102a	2	Dispenser, Waterless Hand Sanitizer	wall	TBD	None
CPCI	3102b	1	Dispenser, Soap; Horizontal, ADA, 40 Oz liquid soap capacity, SS,	wall	8 3/16"w x2 7/8"d x4 13/16"h	None
CPCI	3175	2	Medical Gases, Piped w/Outlets To Be Located for HEADWALL Access; HORIZONTAL	ceiling/wall	Varies	Med.Gases
OPOI	3902	2	Workstation On Wheels; With Basket; Top To accommodate portable equipment/laptops/etc…	floor	18"w x 20"d x 42"h	E 115V for Charging
OPOI	3908	2	Computer, ALL IN ONE: TO MEET EMS STANDARDS & SPECIFICATIONS BY OWNER I.T.	counter/stored	N/A	E 115V; Data-Com
OPOI	4133	2	TV, Flat Panel, LED, 49" : 4 Ultra HD; Wall Mount: OWNER TO SPECIFY; REQUIRES BACKING	wall mount	43.1"w x 24.9"h x 2.5 "d	E 115V; Data
CPSVI	7315	4	Medical Air Flowmeter: Latch Key Chemetron Style Quick Connect: With accessories	stored	stored/attached	Medical Air
CPSVI	7315	2	Medical Air Flowmeter: Latch Key Chemetron Style Quick Connect: With accessories	stored	stored/attached	Medical Air
CPSVI	7316	4	Oxygen Flowmeter: Latch Key Chemetron Style Quick Connect; With accessories	stored	stored/attached	Medical Air
CPSVI	7317	4	Vacuum Regulator: Latch Key Chemetron Style Quick Connect ; With accessories	Stored	stored/attached	Medical Vacuum
OPOI	8060	2	Stretcher, Multi Functional; Hydraulic Lift, Roller Bumpers, Side rails,	floor	81"l x31.5"d x22 to 35.5"h	None

OPOI	8160	1	Cart, Emergency; 6 drawer; ADULT with supplies & accessories	floor	29"w x24.5"d x46.5"h	E 115V for charging equipment on cart
OPOI	8166	2	Cart, Procedures Set Up, 7 Drawer with basic electronic pushbutton lock	floor	23"w x25"d x40"h	None
CPSVCI	8403c	2	Headwall, Patient Service, One Bed with accessories for mounting equipment; 2 Mock EA; O2, Air, Vac	wall/floor	See Details	See Mfg Design for Multiple Power/Data
CPSVCI	8407	2	Locator, Bed; With Multiple Power, Data, USB,	wall	See Mfg Design	None
OPOI	8705	1	Monitor, Defibrillator, 12 Lead ECG & Vital Signs; BP, Pulse, SPO2, Resp; Place on #8160 Cart	cart	14"w x 12"d x 12"h	E 115V; Data/Com
OPOI	8801	2	Pump, Infusion; SPECIFICATIONS BY OWNER; UNIT CAN BE MOUNTED TO IV STAND	stored	20diam x65	E 115V(recharging)
OPOI	9241	2	Stool, Rubber Foot Stool Platform, Single Step, Non Skid, 300# Capacity, Steel Construction	floor	14"w x11"d x9" step	None
OPOI	9299	2	Stand, IV, with 4 Rams Horn Hooks, 5 legged, mobile	floor	16" diameter	None
OPOI	9301b	2	Stand, Mayo, Removable Tray,Adj.Ht.With Claw Foot Mobile Base	floor	18" Square Base: 19.5" x 12.5" tray	None
OPOI	9304a	2	Table, Overbed, Adjustable Height, with tray/Mirror Section	floor	21.25"w x 32"l x adj ht	None
CPCI	9993	2	Track, Cubicle Privacy Curtain, of Appropriate Size & fabric type	ceiling	as required-see layout	None:

ARCH ROOM NO **1041**

ROOM TITLE **STORAGE, SIMMULATION SUITE**

GROUP	EQNO	QTY	DESCRIPTION	LOCATION	SIZE-STD	UTILITIES
OPVI	2254	1	Shelving Unit, Open Wire Shelves, Mobile, With Bumper Guards	floor	36"w x 24"d x 69"h	None
OPVI	2254c	4	Shelving Unit, Open Wire Shelves, Mobile, With Bumper Guards	floor	60"w x 24" x 69"h	None
OPVI	3062b	1	Wastebasket, Office,Tall, 23 gallon, Open Top; COLOR: GRAY	floor	11"w x 22"d x 30"h	None
OPOI	5824g	1	Ultrasound Unit, Can be Hand Carried Battery Operated; SONOSITE EDGE II:REFER TO OWNER PROVIDED	stored	12.1"w x 12.8"l x 2.5"h	E 115V for charging
OPOI	7318	2	Oxygen Administration Setup, Mobile, Emergency Use, Complete with 2 Empty tanks	floor	15x15x24	None
OPOI	7320	2	Pump, Surgical Suction, Portable	stored	14"w x12"d x 10"h	E 115V

OPOI	7325	2	Ventilator, Portable Respiratory, Rechargable, 4 Hou Lithium Ion Battery,Can be Mounted to IV Pole,	stored	11.3" h x 7.1" w x 3.3" d	E 115V for charging
OPOI	8570d	5	Light,Examination; On mobile Stand; LED; Flexible Light Pipe;	floor	21" diameter	E 115V
OPOI	8781	4	Otoscope/Ophthalmoscope,Rechargeable Handle,Complete, With Desk Charger	stored	10"w x 6"d x 3"h	E 115V for Charger-Battery

ARCH ROOM NO 1042

ROOM TITLE TOILET, SIM

GROUP	EQNO	QTY	DESCRIPTION	LOCATION	SIZE-STD	UTILITIES
OPVI	3043c	1	Waste Container, Drop in Top, Suitable for Restroom Areas, 15 gallon, Textured Black	floor	15" diameter x 30"h	None
OPOI	3088b	1	Container, Sharps: Wall Mounted, Lockable	Wall mount	10 1/2"W x 4 1/2"D x 12"H	None
OPOI	3100	1	Dispenser, Paper Towel: TYPE TBD ? BY OWNER-CURRENT JANITORIAL SERVICE	wall mount	TBD	None
OPOI	3102	1	Dispenser, Soap: SPECIFICATIONS & Type TBD BY OWNER	wall mount	7"w x4"d x11.5"h	None
CPCI	3115	1	Robe Hook, Double	wall	6x6x3	None

ARCH ROOM NO 1043

ROOM TITLE ALCOVE, STRETCHER

GROUP	EQNO	QTY	DESCRIPTION	LOCATION	SIZE-STD	UTILITIES
OPOI	9258	1	Stretcher, Ambulance-Cot, Manual	floor	23"w x 80"l x adj ht 13.8"-42.2"	None
OPOI	9259	1	Stretcher, Ambulance-Cot, Powered	floor	23"w x 81"l x adj ht 13.8"-42.2"	E 120V

ARCH ROOM NO 1044

ROOM TITLE TOILET, SIM

GROUP	EQNO	QTY	DESCRIPTION	LOCATION	SIZE-STD	UTILITIES
OPVI	3043c	1	Waste Container, Drop in Top, Suitable for Restroom Areas, 15 gallon, Textured Black	floor	15" diameter x 30"h	None
OPOI	3088b	1	Container, Sharps: Wall Mounted, Lockable	Wall mount	10 1/2"W x 4 1/2"D x 12"H	None
OPOI	3100	1	Dispenser, Paper Towel: TYPE TBD ? BY OWNER-CURRENT JANITORIAL SERVICE	wall mount	TBD	None
OPOI	3102	1	Dispenser, Soap: SPECIFICATIONS & Type TBD BY OWNER	wall mount	7"w x4"d x11.5"h	None

CPCI	3115	1	Robe Hook, Double	wall	6x6x3	None

ARCH ROOM NO 1045

ROOM TITLE ALCOVE, COFFEE

GROUP	EQNO	QTY	DESCRIPTION	LOCATION	SIZE-STD	UTILITIES
OPVI	3040c	1	Wastebasket, 23 Gallon, Slanted Front for easy Access; For Undercounter Areas Color GRAY	floor	11"w x22"l x25"h	None
OPVI	3194	1	Microwave, 1.6 Cu Ft, SS, 1100 Watts; multiple one touch options; 10 cooking levels,	counter/shelf	21.75"w x 13"h x 18.5"d	E 120V; 15 amps
OPVICI	3218	1	Brewing System, Automatic, Air Pot, With Hot Water Disp, Single with 2 Extra Air Pots for Mtg Areas	countertop	17.75""w x 17.5"d x21.75"h	120V;SP;17amp;4 Wire; water supply

ARCH ROOM NO 1046

ROOM TITLE OFFICE, SIM

GROUP	EQNO	QTY	DESCRIPTION	LOCATION	SIZE-STD	UTILITIES
OPVI	0150a	1	Chair, Rotary,Std Mesh Back,5-Legged, HARD CASTERS-SOFT Flooring ,Ergonomic,Adj Arms, Black	floor	28.25"W 25.25"D 42.25”-47”H	None
OPVI	0200a	1	Chair, Desk Side Chair; HARD GLIDES FOR SOFT FLOORING: Upholstery: Stinson, Fuse, Tangelo	floor	25.25"W 22.25'1'D 33"H	None
OPVI	0700	2	Bookcase/Lateral file combination unit; High Pressure Laminate: Columbian Walnut?	floor	36"w x20"d x68"h	none
OPVI	1500	1	Workstation, Furniture System, Upper & Lower Storage: Laminate-Columbian Walnut; Fabric-Mandarian	floor	Various	E 115V Quads: Data-Comm
OPOI	2941	1	Telephone, Standard Desk: TO BE SPECIFIED BY OWNER	desktop	10"D X 8"W X 4"H	Data-Com
OPVI	3039a	1	Wastebasket, Rectangular, plastic, water/fire resistant,28qt	floor	14lx11wx16h	None
CPCI	3115	1	Robe Hook, Double	wall	6x6x3	None
OPOI	3907	1	Computer With Dual Monitor, Wireless Keyboard & Mouse; TO BE SPECIFIED BY OWNER	desk top	TBD	E 115V; Data
OPOI	4133	1	TV, Flat Panel, LED, 49" : 4 Ultra HD; Wall Mount: OWNER TO SPECIFY; REQUIRES BACKING	wall mount	43.1"w x 24.9"h x 2.5 "d	E 115V; Data

ARCH ROOM NO 1047

ROOM TITLE SIMMULATION ROOM, MATERNITY

GROUP	EQNO	QTY	DESCRIPTION	LOCATION	SIZE-STD	UTILITIES
OPVI	1016	1	Chair, Rocking, Simple, Maternity Sim Rm; Upholstery: Stinson-Juxy Phot Stinson, Juxy, JUX05 Photon	floor	30.75"W x 29.5"D x 40.5"H	None

CPCI	1054	1	Clock System, Synchronized; Analogue, With Second Hand; Sized Appropriate for Space; Control System	wall	VARIES	E; Low Voltage
OPVI	1335a	1	Stool, No Backrest, Foot ring, Soft Casters For Hard Flooring, Pneumatic Adj. Ht.	floor	Typical 18"w x 16"d or 16" diameter	None
OPOI	2522	1	Board, Marker, On Mobile Base, Cleanable Surface	floor	24.4" diameter base	None
OPOI	2944	1	Telephone, Wall Mounted: TO BE SPECIFIED BY OWNER	wall	8x3X10	Comm.
OPVI	3016	1	Hamper, Linen, Mobile, Space Saving Triangular Shape for Corners, Step On, SS	floor	18" x 18" x 18" TRIANGULAR	None
OPVI	3041	1	Wastebasket, Step-On,Plastic,Rectangular, Red/Bio Hazard 8 gallon	floor	16.26"W x15.75"D x17.25"H	None
OPVI	3062b	1	Wastebasket, Office,Tall, 23 gallon, Open Top; COLOR: GRAY	floor	11"w x 22"d x 30"h	None
OPOI	3088b	1	Container, Sharps: Wall Mounted, Lockable	Wall mount	10 1/2"W x 4 1/2"D x 12"H	None
OPOI	3089	1	Dispenser, Quad Glove Box: finish options to be selected; Vertical or Horizontal Mount	wall mount	24"w x 12"h x 6"d	None
OPOI	3100	1	Dispenser, Paper Towel: TYPE TBD ? BY OWNER-CURRENT JANITORIAL SERVICE	wall mount	TBD	None
OPOI	3102	1	Dispenser, Soap: SPECIFICATIONS & Type TBD BY OWNER	wall mount	7"w x4"d x11.5"h	None
OPOI	3102a	1	Dispenser, Waterless Hand Sanitizer	wall	TBD	None
CPCI	3175	2	Medical Gases, Piped w/Outlets To Be Located for HEADWALL Access; HORIZONTAL	ceiling/wall	Varies	Med.Gases
CPCI	3175a	1	Medical Gases, Piped w/Outlets To Be Located for Wall Access; HORIZONTAL	wall	Varies	Med.Gases
OPOI	3902	1	Workstation On Wheels; With Basket; Top To accommodate portable equipment/laptops/etc…	floor	18"w x 20"d x 42"h	E 115V for Charging
OPOI	3908	1	Computer, ALL IN ONE: TO MEET EMS STANDARDS & SPECIFICATIONS BY OWNER I.T.	counter/stored	N/A	E 115V; Data-Com
OPOI	4133	2	TV, Flat Panel, LED, 49" : 4 Ultra HD; Wall Mount: OWNER TO SPECIFY; REQUIRES BACKING	wall mount	43.1"w x 24.9"h x 2.5 "d	E 115V; Data
CPSVI	7315	2	Medical Air Flowmeter: Latch Key Chemetron Style Quick Connect: With accessories	stored	stored/attached	Medical Air

CPSVI	7316	2	Oxygen Flowmeter: Latch Key Chemetron Style Quick Connect; With accessories	stored	stored/attached	Medical Air
CPSVI	7317	2	Vacuum Regulator: Latch Key Chemetron Style Quick Connect ; With accessories	Stored	stored/attached	Medical Vacuum
OPOI	8051	1	Bassinet, Infant, Standard with stand, add basket & mattress	floor	18.25"w x31.5"l x37.75"h	None
OPOI	8067	1	Bed, Birthing, Standard, Hi/Lo, Electric with Mattress, LD304 by Stryker	floor	93"l x41"w x17.5-35.5"ht	E 120V; 10 Amp Hospital Grade Plug
OPOI	8160	1	Cart, Emergency; 6 drawer; ADULT with supplies & accessories	floor	29"w x24.5"d x46.5"h	E 115V for charging equipment on cart
OPOI	8166	1	Cart, Procedures Set Up, 7 Drawer with basic electronic pushbutton lock	floor	23"w x25"d x40"h	None
CPSVCI	8403e	1	Headwall, Patient Service, 1 Bed: OB SPECIAL CABINETRY CONFIG FOR STORAGE;2 Mock EA;O2, Air, Vac	wall/floor	See MFG Details	See Mfg Design for Multiple Power/Data
CPSVCI	8404	1	Headwall; Infant Patient Service	wall	Per Design	Med Gases
CPSVCI	8407	1	Locator, Bed; With Multiple Power, Data, USB,	wall	See Mfg Design	None
OPOI	8705	1	Monitor, Defibrillator, 12 Lead ECG & Vital Signs; BP, Pulse, SPO2, Resp; Place on #8160 Cart	cart	14"w x 12"d x 12"h	E 115V; Data/Com
OPOI	8705x	1	Monitor, Fetal Heart; details/technical specifications to be reviewed/decided by owner	stored	13.75"w x 13"d x5"h	E Ded 120; data/com
OPOI	8801	1	Pump, Infusion; SPECIFICATIONS BY OWNER; UNIT CAN BE MOUNTED TO IV STAND	stored	20diam x65	E 115V(recharging)
OPOI	9241	1	Stool, Rubber Foot Stool Platform, Single Step, Non Skid, 300# Capacity, Steel Construction	floor	14"w x11"d x9" step	None
OPOI	9299	1	Stand, IV, with 4 Rams Horn Hooks, 5 legged, mobile	floor	16" diameter	None
OPOI	9301b	1	Stand, Mayo, Removable Tray,Adj.Ht.With Claw Foot Mobile Base	floor	18" Square Base: 19.5" x 12.5" tray	None
OPOI	9304a	1	Table, Overbed, Adjustable Height, with tray/Mirror Section	floor	21.25"w x 32"l x adj ht	None
OPOI	9849	1	Warmer, Infant with MOCK on board air-O2, hooded light	floor	25.5"w x 47"l x 86"h	E 115V;

ARCH ROOM NO **1048**

ROOM TITLE **CLEAN ROOM & STORAGE (AIR SUPPLY ABOVE COUNTER)**

GROUP	EQNO	QTY	DESCRIPTION	LOCATION	SIZE-STD	UTILITIES

OPVI	2254	3	Shelving Unit, Open Wire Shelves, Mobile, With Bumper Guards	floor	36"w x 24"d x 69"h	None
OPVI	2254b	2	Shelving Unit, Open Wire Shelves, Mobile, With Bumper Guards, & Unit Cover	floor	48"w x 24"d x 69"h	None
OPVI	3005	1	Cart, Linen, w/ 4 shelves, On Casters, With Bumper Guard & Cart Cover	floor	60"w x 24"d x 72"h	None
OPVI	3040c	1	Wastebasket, 23 Gallon, Slanted Front for easy Access; For Undercounter Areas Color GRAY	floor	11"w x22"l x25"h	None
OPOI	3088b	1	Container, Sharps: Wall Mounted, Lockable	Wall mount	10 1/2"W x 4 1/2"D x 12"H	None
OPOI	3102a	1	Dispenser, Waterless Hand Sanitizer	wall	TBD	None
OPOI	9258	1	Stretcher, Ambulance-Cot, Manual	floor	23"w x 80"l x adj ht 13.8"-42.2"	None

ARCH ROOM NO **1049**

ROOM TITLE **CONTROL ROOM, MATERNITY**

GROUP	EQNO	QTY	DESCRIPTION	LOCATION	SIZE-STD	UTILITIES
OPVI	0181	2	Chair, Rotary,Std.Back, Hard BLACK Casters for Carpet Floors, NO Arms, Ext Ht For Stdg Work Surface	floor	27.5"W 27.5"D 37.5-47 ¾"H	None
CPCI	1054	1	Clock System, Synchronized; Analogue, With Second Hand; Sized Appropriate for Space; Control System	wall	VARIES	E; Low Voltage
CPCI	2517	1	Board, Marker, Magnetic Cleanable Surface,w/Tray, 18"w x 24"h x 1"d	wall	18"w x 24"h x 1"d	None
OPOI	2944	1	Telephone, Wall Mounted: TO BE SPECIFIED BY OWNER	wall	8x3X10	Comm.
OPVI	3039a	1	Wastebasket, Rectangular, plastic, water/fire resistant,28qt	floor	14lx11wx16h	None
CPCI	3115	1	Robe Hook, Double	wall	6x6x3	None
OPOI	3907s	2	Computer With Dual Monitor, Wireless Keyboard & Mouse; TO MEET EMS STANDARDS & BE SPECIFIED BY	desk top	TBD	E 115V; Data-Com
OPVI	3940	2	Keyboard Tray: Black	under desk	22" TRACK	None

ARCH ROOM NO **1050**

ROOM TITLE **OBSERVATION ROOM, MATERNITY**

GROUP	EQNO	QTY	DESCRIPTION	LOCATION	SIZE-STD	UTILITIES
OPVI	0182	5	Chair, Molded Plastic Back & Upholstered Seat 4-Leg-Static, Partial Arm, For Stdg Ht Counters	floor	25 7/8"W x 21 5/16"D x 29.75'H	None

CPCI	1054	1	Clock System, Synchronized; Analogue, With Second Hand; Sized Appropriate for Space; Control System	wall	VARIES	E; Low Voltage
OPVI	3043	1	Wastebasket, Stainless Steel, Half Moon Shape 12 gal; Open Top; Perforated Panel	floor	18"w x32"hx12"D	None

ARCH ROOM NO 1051

ROOM TITLE ALCOVE, STORAGE (BETWEEN MATERNITY & PEDS)

GROUP	EQNO	QTY	DESCRIPTION	LOCATION	SIZE-STD	UTILITIES
OPVI	3062b	1	Wastebasket, Office,Tall, 23 gallon, Open Top; COLOR: GRAY	floor	11"w x 22"d x 30"h	None
OPVI	3269c	1	Refrigerator, Household, 2 Door, Freezer On Top (NO ICEMAKER)	floor	30"w x31"d x69"h	E Ded 115V

ARCH ROOM NO 1052

ROOM TITLE SOILED ROOM & LAUNDRY

GROUP	EQNO	QTY	DESCRIPTION	LOCATION	SIZE-STD	UTILITIES
OPVI	3005	1	Cart, Linen, w/ 4 shelves, On Casters, With Bumper Guard & Cart Cover	floor	60"w x 24"d x 72"h	None
OPVI	3016	1	Hamper, Linen, Mobile, Space Saving Triangular Shape for Corners, Step On, SS	floor	18" x 18" x 18" TRIANGULAR	None
OPVI	3020	1	Washer, Top Load 4.6 Cu Ft, Energy Star, With Sanitize Cycle: Stainless Steel Tub	floor	27"w x27"d install depth x31.5"D	E 120V, 20 Amp, HW,CW,D
OPVI	3021	1	Dryer, Front Load, Electric; Energy Star; High End Residential	floor	27"w x27"d install depth x31.5"D	E 240V
OPVI	3025	1	Table, Linen: Stainless Steel; With Undershelf for additional storage	floor	48"w x 24"d x 36"h	None
OPVI	3040c	1	Wastebasket, 23 Gallon, Slanted Front for easy Access; For Undercounter Areas Color GRAY	floor	11"w x22"l x25"h	None
OPOI	3100	1	Dispenser, Paper Towel: TYPE TBD ? BY OWNER-CURRENT JANITORIAL SERVICE	wall mount	TBD	None
OPOI	3102	1	Dispenser, Soap: SPECIFICATIONS & Type TBD BY OWNER	wall mount	7"w x4"d x11.5"h	None
OPOI	3102a	1	Dispenser, Waterless Hand Sanitizer	wall	TBD	None
CPCI	3236a	1	Disposal, Garbage for Sink; SPECIFICATIONS TO BE PROVIDED BY MEP	attached/sink	See MFG Details	See MFG Details
OPVICI	3352a	1	Dishwasher, High End Residential, Energy Star Rated, 5 Cycle Including Sanitize, 3 Racks, SS	floor	Req Cut out: 33 7/8"h x 23 5/8"w x 24"d	E 120V; Ded 12 amp; 1440 watts; Water/Drain

ARCH ROOM NO 1053

ROOM TITLE CONTROL ROOM & OBSERVATION, PEDIATRIC

GROUP	EQNO	QTY	DESCRIPTION	LOCATION	SIZE-STD	UTILITIES
OPVI	0150f	1	Chair, Rotary,Std.Back,5-Legged,Ergonomic,Adj.Short Arms: FUTURE PURCHASE	floor	Typical 24.5w x28"d x37"h	None
OPVI	0181a	2	Chair, Rotary, Std.Back,Hard BLACK Casters for Carpet Floors WITH Arms, Ext Ht For Stdg Work Surface	floor	27.5"W 27.5"D 37.5-47 ¾"H	None
CPCI	1054	1	Clock System, Synchronized; Analogue, With Second Hand; Sized Appropriate for Space; Control System	wall	VARIES	E; Low Voltage
OPOI	1079f	1	Desk, Single Pedestal, Pencil/Storage/File Drawer (FUTURE PURCHASE)	floor	72X78"l x "d x 30"h	None
CPCI	2517	1	Board, Marker, Magnetic Cleanable Surface,w/Tray, 18"w x 24"h x 1"d	wall	18"w x 24"h x 1"d	None
OPOI	2941f	1	Telephone, Standard: FUTURE PLACEMENT	desktop	10"D X 8"W X 4"H	Data-Com
OPOI	2944	1	Telephone, Wall Mounted: TO BE SPECIFIED BY OWNER	wall	8x3X10	Comm.
OPVI	3039a	2	Wastebasket, Rectangular, plastic, water/fire resistant,28qt	floor	14lx11wx16h	None
CPCI	3115	2	Robe Hook, Double	wall	6x6x3	None
OPOI	3907s	2	Computer With Dual Monitor, Wireless Keyboard & Mouse; TO MEET EMS STANDARDS & BE SPECIFIED BY	desk top	TBD	E 115V; Data-Com
OPOI	3907z	1	Computer With Dual Monitor, Wireless Keyboard & Mouse; FUTURE PURCHASE:TO BE SPECIFIED BY	desk top	TBD	E 115V; Data-Com
OPVI	3940	2	Keyboard Tray: Black	under desk	22” TRACK	None

ARCH ROOM NO 1054

ROOM TITLE ALCOVE, LINEN (SIMULATION CORRIDOR)

GROUP	EQNO	QTY	DESCRIPTION	LOCATION	SIZE-STD	UTILITIES
OPVI	2254b	3	Shelving Unit, Open Wire Shelves, Mobile, With Bumper Guards, & Unit Cover	floor	48"w x 24"d x 69"h	None
OPVI	3062b	1	Wastebasket, Office,Tall, 23 gallon, Open Top; COLOR: GRAY	floor	11"w x 22"d x 30"h	None
OPSVI	3758	1	Copier, High Vol, 55ppm, MF, networkable: EXISTING LEASE BY OWNER: INSTALLED BY 3RD PARTY	floor	Typical Options Req 6 ft x 3 ft	E-Ded 120V; 20 Amps; RJ 45 Plug Data-Com
OPVI	3764	1	Shredder, Cross Cut, 16 Gallon Capacity, Ultra Quiet, 14 sheets at time shred	floor	19.7”w x15"dx 34.25”h	E Ded 120V

ARCH ROOM NO 1055

ROOM TITLE SIMMULATION ROOM, PEDIATRIC

GROUP	EQNO	QTY	DESCRIPTION	LOCATION	SIZE-STD	UTILITIES
OPVI	1005b	1	Chair, Side, No Arms, Vinyl Upholstery; SOFT BLACK CASTERS FOR HARD FLOORING	floor	23"W 18.3125"D 32.625"H	None
CPCI	1054	1	Clock System, Synchronized; Analogue, With Second Hand; Sized Appropriate for Space; Control System	wall	VARIES	E; Low Voltage
OPVI	1335a	1	Stool, No Backrest, Foot ring, Soft Casters For Hard Flooring, Pneumatic Adj. Ht.	floor	Typical 18"w x 16"d or 16" diameter	None
OPOI	2522	1	Board, Marker, On Mobile Base, Cleanable Surface	floor	24.4" diameter base	None
OPOI	2944	1	Telephone, Wall Mounted: TO BE SPECIFIED BY OWNER	wall	8x3X10	Comm.
OPVI	3016	1	Hamper, Linen, Mobile, Space Saving Triangular Shape for Corners, Step On, SS	floor	18" x 18" x 18" TRIANGULAR	None
OPVI	3041	1	Wastebasket, Step-On,Plastic,Rectangular, Red/Bio Hazard 8 gallon	floor	16.26"W x15.75"D x17.25"H	None
OPVI	3062b	1	Wastebasket, Office,Tall, 23 gallon, Open Top; COLOR: GRAY	floor	11"w x 22"d x 30"h	None
OPOI	3088b	1	Container, Sharps: Wall Mounted, Lockable	Wall mount	10 1/2"W x 4 1/2"D x 12"H	None
OPOI	3089	1	Dispenser, Quad Glove Box: finish options to be selected; Vertical or Horizontal Mount	wall mount	24"w x 12"h x 6"d	None
OPOI	3100	1	Dispenser, Paper Towel: TYPE TBD ? BY OWNER-CURRENT JANITORIAL SERVICE	wall mount	TBD	None
OPOI	3102a	1	Dispenser, Waterless Hand Sanitizer	wall	TBD	None
CPCI	3102b	1	Dispenser, Soap; Horizontal, ADA, 40 Oz liquid soap capacity, SS,	wall	8 3/16"w x2 7/8"d x4 13/16"h	None
CPCI	3175	2	Medical Gases, Piped w/Outlets To Be Located for HEADWALL Access; HORIZONTAL	ceiling/wall	Varies	Med.Gases
OPOI	3902	1	Workstation On Wheels; With Basket; Top To accommodate portable equipment/laptops/etc…	floor	18"w x 20"d x 42"h	E 115V for Charging
OPOI	3908	1	Computer, ALL IN ONE: TO MEET EMS STANDARDS & SPECIFICATIONS BY OWNER I.T.	counter/stored	N/A	E 115V; Data-Com
OPOI	4133	1	TV, Flat Panel, LED, 49" : 4 Ultra HD; Wall Mount: OWNER TO SPECIFY; REQUIRES BACKING	wall mount	43.1"w x 24.9"h x 2.5 "d	E 115V; Data

CPSVI	7315	2	Medical Air Flowmeter: Latch Key Chemetron Style Quick Connect: With accessories	stored	stored/attached	Medical Air
CPSVI	7316	2	Oxygen Flowmeter: Latch Key Chemetron Style Quick Connect; With accessories	stored	stored/attached	Medical Air
CPSVI	7317	2	Vacuum Regulator: Latch Key Chemetron Style Quick Connect ; With accessories	Stored	stored/attached	Medical Vacuum
OPOI	8060	1	Stretcher, Multi Functional; Hydraulic Lift, Roller Bumpers, Side rails,	floor	81"l x31.5"d x22 to 35.5"h	None
OPOI	8160a	1	Cart, Emergency; 9 drawer Pediatric/Braslow cart with supplies	floor	29"w x24.5"d x46.5"h	None
OPOI	8166	1	Cart, Procedures Set Up, 7 Drawer with basic electronic pushbutton lock	floor	23"w x25"d x40"h	None
OPOI	8181	1	Crib, Stretcher, Adj Height, with accessories to be selected	floor	72"l x 26"w x adj ht	E 115V
CPSVCI	8403d	2	Headwall, Vertical For Pediatric Patient Service, One Bed; 2 Mock EA; O2, Air, Vac	wall/floor	See Details	E,Comm,Med.Gas,RN,Monitor
CPSVCI	8407	1	Locator, Bed; With Multiple Power, Data, USB,	wall	See Mfg Design	None
OPOI	8705	1	Monitor, Defibrillator, 12 Lead ECG & Vital Signs; BP, Pulse, SPO2, Resp; Place on #8160 Cart	cart	14"w x 12"d x 12"h	E 115V; Data/Com
OPOI	8801	2	Pump, Infusion; SPECIFICATIONS BY OWNER; UNIT CAN BE MOUNTED TO IV STAND	stored	20diam x65	E 115V(recharging)
OPOI	9241	1	Stool, Rubber Foot Stool Platform, Single Step, Non Skid, 300# Capacity, Steel Construction	floor	14"w x11"d x9" step	None
OPOI	9299	1	Stand, IV, with 4 Rams Horn Hooks, 5 legged, mobile	floor	16" diameter	None
OPOI	9301b	1	Stand, Mayo, Removable Tray,Adj.Ht.With Claw Foot Mobile Base	floor	18" Square Base: 19.5" x 12.5" tray	None
OPOI	9304a	1	Table, Overbed, Adjustable Height, with tray/Mirror Section	floor	21.25"w x 32"l x adj ht	None
CPCI	9993	1	Track, Cubicle Privacy Curtain, of Appropriate Size & fabric type	ceiling	as required-see layout	None:

ARCH ROOM NO **1056**

ROOM TITLE **DEBRIEF, SIM 2**

GROUP	EQNO	QTY	DESCRIPTION	LOCATION	SIZE-STD	UTILITIES
OPVI	0212a	10	Chair, Conference Type; MOLDED PLASTIC BACK & SEAT On Hard Casters For Carpet	floor	25.875"W 21.3125"D 32.625"H	None

OPVI	1005a	2	Chair, Side,MOLDED PLASTIC BACK & SEAT: HARD BLACK CASTERS FOR CARPET	floor	23"W 18.3125"D 32.625"H	None
CPCI	1054	1	Clock System, Synchronized; Analogue, With Second Hand; Sized Appropriate for Space; Control System	wall	VARIES	E; Low Voltage
OPVI	1403g	4	Table, Conference Type, Flip-Top, Nesting	floor	54"l x24"d x30"h	Req Access To Floor Utilities
CPCI	2523	1	Board, Marker; Large for Stage Area/Conference Spaces; Wall Mounted	wall	8'w x 4'h x2"d	None
OPOI	2945	0	Telephone, Conference: TO BE SPECIFIED BY OWNER	desktop	14X13X3	E 115V; Data-Com
OPVI	3043	2	Wastebasket, Stainless Steel, Half Moon Shape 12 gal; Open Top; Perforated Panel	floor	18"w x32"hx12"D	None
OPOI	3907	1	Computer With Dual Monitor, Wireless Keyboard & Mouse; TO BE SPECIFIED BY OWNER	desk top	TBD	E 115V; Data
OPOI	4103	1	Podium, Cabinet, Audio/Visual, Portable, For Up TO 2 PC & DUAL MONITOR; SPECS BY I.T. DEPT/3RD	floor	TBD By Design	E 115V Quad; 2 Data/?Com
OPOI	4109	1	Microphone, Ceiling Hung; Poly Com or Comparable, for Meeting Rooms: SPECIFIED BY OWNER I.T. DEPT	ceiling	TBD BY I.T.	TBD
OPOI	4110	1	Cam, Web or Poly Com Cam for Meeting Rooms: TO SPECIFIED BY OWNER I.T. DEPT	wall mount	TBD BY I.T.	TBD
OPOI	4130	1	Television, Flat Panel Monitor, 82" screen; Wall Mount REQUIRES BACKING; SPECS BY OWNER I.T.	wall mount	TYPICAL:72"w x 2.4"d x 45.1"h	E 115V; Data

ARCH ROOM NO **1057**

ROOM TITLE **RESTROOM & DRESSING L1**

GROUP	EQNO	QTY	DESCRIPTION	LOCATION	SIZE-STD	UTILITIES
OPVI	3039a	1	Wastebasket, Rectangular, plastic, water/fire resistant,28qt	floor	14lx11wx16h	None
OPVI	3043c	1	Waste Container, Drop in Top, Suitable for Restroom Areas, 15 gallon, Textured Black	floor	15" diameter x 30"h	None
OPOI	3088b	1	Container, Sharps: Wall Mounted, Lockable	Wall mount	10 1/2"W x 4 1/2"D x 12"H	None
OPOI	3100	2	Dispenser, Paper Towel: TYPE TBD ? BY OWNER-CURRENT JANITORIAL SERVICE	wall mount	TBD	None
OPOI	3102	3	Dispenser, Soap: SPECIFICATIONS & Type TBD BY OWNER	wall mount	7"w x4"d x11.5"h	None
CPCI	3115	1	Robe Hook, Double	wall	6x6x3	None

CPCI	9993	1	Track, Cubicle Privacy Curtain, of Appropriate Size & fabric type	ceiling	as required-see layout	None:
OPVI	9996a	1	Bench, Sitting Suitable for Location: Fabric-Stinson Fuse-Tangelo; Metal-Polished Aluminum	floor	Approx 48"w x 20"d x 20"h	None

ARCH ROOM NO 1058

ROOM TITLE RESTROOM & DRESSING L1

GROUP	EQNO	QTY	DESCRIPTION	LOCATION	SIZE-STD	UTILITIES
OPVI	3016	1	Hamper, Linen, Mobile, Space Saving Triangular Shape for Corners, Step On, SS	floor	18" x 18" x 18" TRIANGULAR	None
OPVI	3039a	1	Wastebasket, Rectangular, plastic, water/fire resistant,28qt	floor	14lx11wx16h	None
OPVI	3043c	1	Waste Container, Drop in Top, Suitable for Restroom Areas, 15 gallon, Textured Black	floor	15" diameter x 30"h	None
OPOI	3088b	1	Container, Sharps: Wall Mounted, Lockable	Wall mount	10 1/2"W x 4 1/2"D x 12"H	None
OPOI	3100	2	Dispenser, Paper Towel: TYPE TBD ? BY OWNER-CURRENT JANITORIAL SERVICE	wall mount	TBD	None
OPOI	3102	3	Dispenser, Soap: SPECIFICATIONS & Type TBD BY OWNER	wall mount	7"w x4"d x11.5"h	None
CPCI	3115	1	Robe Hook, Double	wall	6x6x3	None
CPCI	9993	1	Track, Cubicle Privacy Curtain, of Appropriate Size & fabric type	ceiling	as required-see layout	None:
OPVI	9996a	1	Bench, Sitting Suitable for Location: Fabric-Stinson Fuse-Tangelo; Metal-Polished Aluminum	floor	Approx 48"w x 20"d x 20"h	None

ARCH ROOM NO 1059

ROOM TITLE PERSONAL HEALTH ROOM

GROUP	EQNO	QTY	DESCRIPTION	LOCATION	SIZE-STD	UTILITIES
OPOI	1017	1	Chair, With Foot Rest,With Lower Surround, Com Seat: Upholstery-Stinson-Juxy Photon	floor	24"w x 24"d x 38"h	None
OPVI	1206	1	Lamp, Floor, Decorator, 3 level bulb	floor	17" diam x 60"	E 115V
OPOI	1440	1	Shelf, Bathroom	floor	13”W x 11”D x 28”H	None
CPCI	1805	1	Mirror, Dressing (Style & Size TBD)	wall	18x.5x60	None
OPVI	3043	1	Wastebasket, Stainless Steel, Half Moon Shape 12 gal; Open Top; Perforated Panel	floor	18"w x32"hx12"D	None

OPOI	3088b	1	Container, Sharps: Wall Mounted, Lockable	Wall mount	10 1/2"W x 4 1/2"D x 12"H	None
OPOI	3100	1	Dispenser, Paper Towel: TYPE TBD ? BY OWNER-CURRENT JANITORIAL SERVICE	wall mount	TBD	None
OPOI	3102	1	Dispenser, Soap: SPECIFICATIONS & Type TBD BY OWNER	wall mount	7"w x4"d x11.5"h	None
CPCI	3115	1	Robe Hook, Double	wall	6x6x3	None

ARCH ROOM NO **1060**

ROOM TITLE **LAB, OMM**

GROUP	EQNO	QTY	DESCRIPTION	LOCATION	SIZE-STD	UTILITIES
OPVI	0212a	6	Chair, Conference Type; MOLDED PLASTIC BACK & SEAT On Hard Casters For Carpet	floor	25.875"W 21.3125"D 32.625"H	None
OPVI	1023a	3	Ottoman, Upholstered With Extra Cushioning, FABRIC: Maharam-Bitmap Armadillo; Black Legs & Glides	floor	16"W 16"D 16"H	None
OPVI	1023b	3	Ottoman, Upholstered With Extra Cushioning, FABRIC: Maharam-Bitmap Sienna; Black Legs & Glides	floor	16"W 16"D 16"H	None
CPCI	1054	4	Clock System, Synchronized; Analogue, With Second Hand; Sized Appropriate for Space; Control System	wall	VARIES	E; Low Voltage
OPVI	1329	1	Stool, Bar; Static; with low profile back; no arms; small scale; Fabric: Bitmap-Sienna	floor	18.75"w x 23.75"d x 30.25"h	None
OPOI	1335	49	Stool, No Backrest, No Footring, On Hard Casters For Carpet, Pneumatic Adj HT (DONATED BY PEDIGO)	floor	18" Diameter	None
OPVI	1412c	1	Table, Round, 60" Diameter:	floor	60" diam x 30"H	None
CPCI	2523	3	Board, Marker; Large for Stage Area/Conference Spaces; Wall Mounted	wall	8'w x 4'h x2"d	None
OPOI	2542	2	Skeleton Model, Full Size, on Stand with Casters (stored in cabinetry) EXISTING EQUIPMENT TO TX	floor/stored	with stand approx 76"h x 18"w	None
OPOI	2543	6	Skeleton Model, Spinal, on Stand (stored in cabinetry) EXISTING EQUIPMENT TO TX	stored	with stand approx 33"h x 20"w	None
OPOI	2544	25	Skulls, Anatomical for OMM Lab Area	Stored	varies	None
OPOI	2941	1	Telephone, Standard Desk: TO BE SPECIFIED BY OWNER	desktop	10"D X 8"W X 4"H	Data-Com
OPVI	3040c	2	Wastebasket, 23 Gallon, Slanted Front for easy Access; For Undercounter Areas Color GRAY	floor	11"w x22"l x25"h	None

OPVI	3043	3	Wastebasket, Stainless Steel, Half Moon Shape 12 gal; Open Top; Perforated Panel	floor	18"w x32"hx12"D	None
OPOI	3100	2	Dispenser, Paper Towel: TYPE TBD ? BY OWNER-CURRENT JANITORIAL SERVICE	wall mount	TBD	None
OPOI	3102	2	Dispenser, Soap: SPECIFICATIONS & Type TBD BY OWNER	wall mount	7"w x4"d x11.5"h	None
OPOI	3903	2	Computer,Personal & Monitor, Wireless Keyboard & Mouse for Desk Use: TO BE SPECIFIED BY OWNER	desktop	24"w x 18"d x 22"h	E 115V; Data
OPOI	4103	1	Podium, Cabinet, Audio/Visual, Portable, For Up TO 2 PC & DUAL MONITOR; SPECS BY I.T. DEPT/3RD	floor	TBD By Design	E 115V Quad; 2 Data/?Com
OPOI	4106	1	Camera, Digital For Use in Labs: TO BE SPECIFIED BY OWNER I.T. DEPT	stored	n/a	None
OPOI	4107	1	Camera, Digital; Ceiling Mounted for displaying to Lab viewing monitors;BY OWNER I.T. DEPT	CEILING	TBD	E 115; DATA; OR POE
OPOI	4107a	1	Camera, Digital; TV Monitor Mounted for displaying to Lab viewing monitors;BY OWNER I.T. DEPT	attached to TV	TBD	E 115; DATA; OR POE
OPOI	4108	1	Camera, Document for Classrooms: SPECS BY OWNER I.T. DEPT	Sits on 4103	11.7"w x19"d x18.8"h	E 115V, Data
OPOI	4130	2	Television, Flat Panel Monitor, 82" screen; Wall Mount REQUIRES BACKING; SPECS BY OWNER I.T.	wall mount	TYPICAL:72"w x 2.4"d x 45.1"h	E 115V; Data
OPOI	4131a	5	Television Monitor, Flat Panel, 65"; Ceiling Mount; REQ STRUCTURAL SUPPORT; I.T. & 3RD PARTY	ceiling mt	57.6"w x 2.5"d x 33.2"h	E 115V; Data
OPOI	4149	1	Scheduling System for Conference Room areas; 7" monitor display to be mtd outside of mtg space	wall mount	8.07"w x5.12"h x2.6"d	POE
OPOI	9316	24	Tables, OMM; 2 Section; Rigid Surface; NO CUT OUTS; NO ARMS	floor	28"w x 77"l x adj ht 17 to 37"h	None
OPOI	9317	1	Table, OMM, Single Section 30" Top, Dual Rocker Foot Pedal, Electric; NO CUT OUTS	floor	30"w x 75"l x adj ht	E 120V

ARCH ROOM NO **1061**

ROOM TITLE **STORAGE, LARGE; OMM**

GROUP	EQNO	QTY	DESCRIPTION	LOCATION	SIZE-STD	UTILITIES
OPOI	1335	1	Stool, No Backrest, No Footring, On Hard Casters For Carpet, Pneumatic Adj HT (DONATED BY PEDIGO)	floor	18" Diameter	None
OPVI	2254	3	Shelving Unit, Open Wire Shelves, Mobile, With Bumper Guards	floor	36"w x 24"d x 69"h	None
OPVI	2254a	2	Shelving Unit, Open Wire Shelves, Mobile, with Bumper guards, drawer glide system & bins	floor	60""w x 24"d x69"h	None

OPOI	2944	1	Telephone, Wall Mounted: TO BE SPECIFIED BY OWNER	wall	8x3X10	Comm.
OPOI	3006	1	Cart, Utility, 2 shelf, 24" wide, Poly Materials	floor	24"wx 36"l x 32"h	None
OPVI	3043	1	Wastebasket, Stainless Steel, Half Moon Shape 12 gal; Open Top; Perforated Panel	floor	18"w x32"hx12"D	None

ARCH ROOM NO 1064

ROOM TITLE VR SIM ROOM

GROUP	EQNO	QTY	DESCRIPTION	LOCATION	SIZE-STD	UTILITIES
OPVI	1005a	6	Chair, Side,MOLDED PLASTIC BACK & SEAT: HARD BLACK CASTERS FOR CARPET	floor	23"W 18.3125"D 32.625"H	None
CPCI	2523	1	Board, Marker; Large for Stage Area/Conference Spaces; Wall Mounted	wall	8'w x 4'h x2"d	None
OPOI	2944	1	Telephone, Wall Mounted: TO BE SPECIFIED BY OWNER	wall	8x3X10	Comm.
OPVI	3043	1	Wastebasket, Stainless Steel, Half Moon Shape 12 gal; Open Top; Perforated Panel	floor	18"w x32"hx12"D	None
OPOI	3903v	1	Computer, FOR VIRTUAL REALITY with 27" monitors: SPECS BY OWNER I.T. DEPT	table top	24.75"w x18"h x 4"d	E 115V; Data Com
OPOI	4101	1	Cabinet, Audio/Visual, Lockable, Wood Grain:multiple configurations available; DETAILS BY OWNER I.T.	floor	TBD by Owner I.T./3rd Party	None
OPOI	4116	1	Projector, 3D, Glasses or Goggles,C eiling Mt, & Other Accessories; SPEC TB PROVIDED BY OWNER	ceiling mt	14.5"w x3.81"h x11.26"d	E 120V; HDMI Cabling
OPOI	4117	1	Table, Augmented Reality Set Up, On Casters	floor	48"w x 24"d x 30"h	None
OPCI	4120a	1	Screen, Projection, Powered, HDTV Format;Concealed in Ceiling	wall/ceiling	92"w x8"d x52"h	E 120V, Control Switch
OPOI	4131	1	Television Monitor, Flat Panel, 65"; Wall Mount; REQ BACKING: DETAILS BY I.T. & 3RD PARTY VENDOR	wall/ceiling mt	57.6"w x 2.5"d x 33.2"h	E 115V; Data

ARCH ROOM NO 1065

ROOM TITLE VR SIM STORAGE

GROUP	EQNO	QTY	DESCRIPTION	LOCATION	SIZE-STD	UTILITIES
OPVI	2254	1	Shelving Unit, Open Wire Shelves, Mobile, With Bumper Guards	floor	36"w x 24"d x 69"h	None

ARCH ROOM NO 1066

ROOM TITLE STUDY GROUP 6

GROUP	EQNO	QTY	DESCRIPTION	LOCATION	SIZE-STD	UTILITIES

OPVI	0212a	10	Chair, Conference Type; MOLDED PLASTIC BACK & SEAT On Hard Casters For Carpet	floor	25.875"W 21.3125"D 32.625"H	None
OPVI	1005a	1	Chair, Side,MOLDED PLASTIC BACK & SEAT: HARD BLACK CASTERS FOR CARPET	floor	23"W 18.3125"D 32.625"H	None
CPCI	1054	1	Clock System, Synchronized; Analogue, With Second Hand; Sized Appropriate for Space; Control System	wall	VARIES	E; Low Voltage
OPVI	1403b	4	Table, Educational Type, Flip Top, Nesting w/Optional Casters	floor	72"l x24"d x30"h	Req Access To Floor Utilities
CPCI	2523	2	Board, Marker; Large for Stage Area/Conference Spaces; Wall Mounted	wall	8'w x 4'h x2"d	None
OPOI	2944	1	Telephone, Wall Mounted: TO BE SPECIFIED BY OWNER	wall	8x3X10	Comm.
OPVI	3043	1	Wastebasket, Stainless Steel, Half Moon Shape 12 gal; Open Top; Perforated Panel	floor	18"w x32"hx12"D	None
OPOI	3907	1	Computer With Dual Monitor, Wireless Keyboard & Mouse; TO BE SPECIFIED BY OWNER	desk top	TBD	E 115V; Data
OPOI	4102	1	Cabinet, Audio/Visual, Portable, For 1 PC & MONITOR; SPECS TBD BY I.T. DEPT/3RD PARTY VENDOR	floor	TBD By Design	E 115V Quad; Data/?Com
OPOI	4109	1	Microphone, Ceiling Hung; Poly Com or Comparable, for Meeting Rooms: SPECIFIED BY OWNER I.T. DEPT	ceiling	TBD BY I.T.	TBD
OPOI	4110	1	Cam, Web or Poly Com Cam for Meeting Rooms: TO SPECIFIED BY OWNER I.T. DEPT	wall mount	TBD BY I.T.	TBD
OPOI	4136	1	Television-Monitor, High Resolution Flat Panel, 55", WaMount; REQUIRES BACKING: SPEC BY OWNER	wall or ceiling	49.2"w x 29"h x 3.1"d	E 115V; Cabling; Data
OPOI	4149	1	Scheduling System for Conference Room areas; 7" monitor display to be mtd outside of mtg space	wall mount	8.07"w x5.12"h x2.6"d	POE

ARCH ROOM NO **1067**

ROOM TITLE **STUDY GROUP 7**

GROUP	EQNO	QTY	DESCRIPTION	LOCATION	SIZE-STD	UTILITIES
OPVI	0212a	10	Chair, Conference Type; MOLDED PLASTIC BACK & SEAT On Hard Casters For Carpet	floor	25.875"W 21.3125"D 32.625"H	None
OPVI	1005a	1	Chair, Side,MOLDED PLASTIC BACK & SEAT: HARD BLACK CASTERS FOR CARPET	floor	23"W 18.3125"D 32.625"H	None
CPCI	1054	1	Clock System, Synchronized; Analogue, With Second Hand; Sized Appropriate for Space; Control System	wall	VARIES	E; Low Voltage
OPVI	1403b	4	Table, Educational Type, Flip Top, Nesting w/Optional Casters	floor	72"l x24"d x30"h	Req Access To Floor Utilities

CPCI	2523	2	Board, Marker; Large for Stage Area/Conference Spaces; Wall Mounted	wall	8'w x 4'h x2"d	None
OPOI	2944	1	Telephone, Wall Mounted: TO BE SPECIFIED BY OWNER	wall	8x3X10	Comm.
OPVI	3043	1	Wastebasket, Stainless Steel, Half Moon Shape 12 gal; Open Top; Perforated Panel	floor	18"w x32"hx12"D	None
OPOI	3907	1	Computer With Dual Monitor, Wireless Keyboard & Mouse; TO BE SPECIFIED BY OWNER	desk top	TBD	E 115V; Data
OPOI	4102	1	Cabinet, Audio/Visual, Portable, For 1 PC & MONITOR; SPECS TBD BY I.T. DEPT/3RD PARTY VENDOR	floor	TBD By Design	E 115V Quad; Data/?Com
OPOI	4109	1	Microphone, Ceiling Hung; Poly Com or Comparable, for Meeting Rooms: SPECIFIED BY OWNER I.T. DEPT	ceiling	TBD BY I.T.	TBD
OPOI	4110	1	Cam, Web or Poly Com Cam for Meeting Rooms: TO SPECIFIED BY OWNER I.T. DEPT	wall mount	TBD BY I.T.	TBD
OPOI	4136	1	Television-Monitor, High Resolution Flat Panel, 55", WaMount; REQUIRES BACKING: SPEC BY OWNER	wall or ceiling	49.2"w x 29"h x 3.1"d	E 115V; Cabling; Data
OPOI	4149	1	Scheduling System for Conference Room areas; 7" monitor display to be mtd outside of mtg space	wall mount	8.07"w x5.12"h x2.6"d	POE

DEPT TITLE LEVEL TWO: STUDENT STUDY, LIBRARY & COMMUNITY

ARCH ROOM NO 2002

ROOM TITLE GROUP STUDY 11, L2

GROUP	EQNO	QTY	DESCRIPTION	LOCATION	SIZE-STD	UTILITIES
OPVI	0212a	10	Chair, Conference Type; MOLDED PLASTIC BACK & SEAT On Hard Casters For Carpet	floor	25.875"W 21.3125"D 32.625"H	None
OPVI	1005a	1	Chair, Side,MOLDED PLASTIC BACK & SEAT: HARD BLACK CASTERS FOR CARPET	floor	23"W 18.3125"D 32.625"H	None
CPCI	1054	1	Clock System, Synchronized; Analogue, With Second Hand; Sized Appropriate for Space; Control System	wall	VARIES	E; Low Voltage
OPVI	1403b	4	Table, Educational Type, Flip Top, Nesting w/Optional Casters	floor	72"l x24"d x30"h	Req Access To Floor Utilities
CPCI	2523	2	Board, Marker; Large for Stage Area/Conference Spaces; Wall Mounted	wall	8'w x 4'h x2"d	None
OPOI	2944	1	Telephone, Wall Mounted: TO BE SPECIFIED BY OWNER	wall	8x3X10	Comm.
OPVI	3043	1	Wastebasket, Stainless Steel, Half Moon Shape 12 gal; Open Top; Perforated Panel	floor	18"w x32"hx12"D	None
OPOI	3907	1	Computer With Dual Monitor, Wireless Keyboard & Mouse; TO BE SPECIFIED BY OWNER	desk top	TBD	E 115V; Data
OPOI	4102	1	Cabinet, Audio/Visual, Portable, For 1 PC & MONITOR; SPECS TBD BY I.T. DEPT/3RD PARTY VENDOR	floor	TBD By Design	E 115V Quad; Data/?Com
OPOI	4109	1	Microphone, Ceiling Hung; Poly Com or Comparable, for Meeting Rooms: SPECIFIED BY OWNER I.T. DEPT	ceiling	TBD BY I.T.	TBD
OPOI	4110	1	Cam, Web or Poly Com Cam for Meeting Rooms: TO SPECIFIED BY OWNER I.T. DEPT	wall mount	TBD BY I.T.	TBD
OPOI	4131	1	Television Monitor, Flat Panel, 65"; Wall Mount; REQ BACKING: DETAILS BY I.T. & 3RD PARTY VENDOR	wall/ceiling mt	57.6"w x 2.5"d x 33.2"h	E 115V; Data
OPOI	4149	1	Scheduling System for Conference Room areas; 7" monitor display to be mtd outside of mtg space	wall mount	8.07"w x5.12"h x2.6"d	POE

ARCH ROOM NO 2003

ROOM TITLE TEST ROOM PREP & STORAGE

GROUP	EQNO	QTY	DESCRIPTION	LOCATION	SIZE-STD	UTILITIES
OPOI	3972	2	Cart, Trades Utility; for Facilities Maintenance or I.T. Dept, w/doors/drawers/poly		19.25"w x38"l x33.4"h	None

ARCH ROOM NO 2004

ROOM TITLE CORRIDOR, L2 S (SOFT SEATING NEAR S STAIR & LOBBY)

GROUP	EQNO	QTY	DESCRIPTION	LOCATION	SIZE-STD	UTILITIES

OPVI	1027b	4	Seating, 1 Person, Upholstered: Club Style; Design Features TBD; LOBBY; NEROLI & TANGELO	floor	32"W 33.5"D 28.25"H	None
OPVI	1027c	2	Seating, 1 Person, Upholstered: Club Style; Design Features TBD; FABRIC; QUARRY & TANGELO	floor	32"W 33.5"D 28.25"H	None
OPVI	1027d	7	Seating, 1 Person, Upholstered: Club Style; Design Features TBD; FABRIC; BITMAP & QUARRY	floor	32"W 33.5"D 28.25"H	None
CPCI	1054	1	Clock System, Synchronized; Analogue, With Second Hand; Sized Appropriate for Space; Control System	wall	VARIES	E; Low Voltage
OPVI	1410a	3	Table, End, Drum Round 20" Diameter (Laminate: Mocha)	floor	20" Diameter x20"h	None
OPVI	1421	2	Table, Coffee; Suitable for Lounge/Waiting Areas	floor	36" diameter x 24"h	None
OPOI	8202	2	Defibrillator, External, Automated (AED) With Accessories	Stored	16"w x 14.75"h x8.5"d	None
CPCI	8202a	2	Cabinet, SEMI Recessed AED; Stainless Steel battery alarm/safety clasp/optional custom logo	recessed wall	wall opening 15.25"w x15.25"h x3.75"d	None
OPOI	9328	1	Table, Treatment, Rigid Top, Padded, H Brace	floor	30"w x 72"l x 31"h	None

ARCH ROOM NO **2006**

ROOM TITLE **LIBRARY**

GROUP	EQNO	QTY	DESCRIPTION	LOCATION	SIZE-STD	UTILITIES
OPVI	0150a	6	Chair, Rotary,Std Mesh Back,5-Legged, HARD CASTERS-SOFT Flooring ,Ergonomic,Adj Arms, Black	floor	28.25"W 25.25"D 42.25”-47”H	None
OPVI	0212a	16	Chair, Conference Type; MOLDED PLASTIC BACK & SEAT On Hard Casters For Carpet	floor	25.875"W 21.3125"D 32.625"H	None
CPCI	1054	1	Clock System, Synchronized; Analogue, With Second Hand; Sized Appropriate for Space; Control System	wall	VARIES	E; Low Voltage
OPVI	1403	2	Table, Standing Height: Privacy Screen between sets: For LIBRARY AREAS, Size, Style TBD by Designer	floor	84"l x 24"d x 42"h	E 115V; Data
OPVI	1403a	5	Table, Educational Type, Flip Top, Nesting w/Opt Casters	floor	48"l x24"d x29"h	E 115V-floor: Data Com
OPVI	1412s	3	Table, Round, 48" Diameter:	floor	48" diamx30"h	None
OPVI	1423	2	Table, Library stations; No Modesty Panel, Static:	floor	48"l x 24"d x 29"h	None
OPVI	1423a	2	Table, Library stations, W/Modesty Panels Casters:	floor	48"l x 24"d x 29"h	None

OPVI	1500b	1	Workstation,Open Office Furniture System,Modular: 120 DEGREE CURVED TOP	floor	48”W x 24”D	E 115V Quad: Data-Com
OPVI	2266	1	Shelving, Library Type, Books, Single Face, Adj Shelves; STARTER UNIT;	floor	36"w x12"d x82"h	None
OPVI	2266a	3	Shelving, Library Type, Books, Double Face, Adj Shelves; ADDER UNIT;	floor	36"w x12"d x82"h	None
OPVI	2267	1	Shelving, Library, Journals/Periodicals: STARTER UNIT; SINGLE FACE;	floor	36"w x12"d x82"h	None
OPVI	2267a	4	Shelving, Library, Journals/Periodicals: ADDER UNIT; SINGLE FACE;	floor	36"w x12"d x82"h	
OPOI	2941	1	Telephone, Standard Desk: TO BE SPECIFIED BY OWNER	desktop	10"D X 8"W X 4"H	Data-Com
OPVI	3039a	1	Wastebasket, Rectangular, plastic, water/fire resistant,28qt	floor	14lx11wx16h	None
OPVI	3043	1	Wastebasket, Stainless Steel, Half Moon Shape 12 gal; Open Top; Perforated Panel	floor	18"w x32"hx12"D	None
OPVI	3062b	2	Wastebasket, Office,Tall, 23 gallon, Open Top; COLOR: GRAY	floor	11"w x 22"d x 30"h	None
OPSVI	3758	2	Copier, High Vol, 55ppm, MF, networkable: EXISTING LEASE BY OWNER: INSTALLED BY 3RD PARTY	floor	Typical Options Req 6 ft x 3 ft	E-Ded 120V; 20 Amps; RJ 45 Plug Data-Com
OPOI	3903	10	Computer,Personal & Monitor, Wireless Keyboard & Mouse for Desk Use: TO BE SPECIFIED BY OWNER	desktop	24"w x 18"d x 22"h	E 115V; Data

ARCH ROOM NO **2007**

ROOM TITLE **LIBRARY CIRCULATOR**

GROUP	EQNO	QTY	DESCRIPTION	LOCATION	SIZE-STD	UTILITIES
OPVI	0150a	1	Chair, Rotary,Std Mesh Back,5-Legged, HARD CASTERS-SOFT Flooring ,Ergonomic,Adj Arms, Black	floor	28.25"W 25.25"D 42.25”-47”H	None
OPVI	1500a	1	Workstation, Furniture System, With Transaction Top:	floor	72”W x 78”L x 29 ½”H	E 115V Quads: Data-Comm
OPOI	2941	1	Telephone, Standard Desk: TO BE SPECIFIED BY OWNER	desktop	10"D X 8"W X 4"H	Data-Com
OPVI	3039a	1	Wastebasket, Rectangular, plastic, water/fire resistant,28qt	floor	14lx11wx16h	None
OPOI	3907b	1	Computer With Dual Monitor, With Keyboard & Mouse; TO BE SPECIFIED BY OWNER	desk top	TBD	E 115V; Data

ARCH ROOM NO **2008**

ROOM TITLE **OFFICE, REGISTERED LIBRARIAN**

GROUP	EQNO	QTY	DESCRIPTION	LOCATION	SIZE-STD	UTILITIES

OPVI	0150a	1	Chair, Rotary,Std Mesh Back,5-Legged, HARD CASTERS-SOFT Flooring ,Ergonomic,Adj Arms, Black	floor	28.25"W 25.25"D 42.25”-47”H	None
OPVI	0200a	1	Chair, Desk Side Chair; HARD GLIDES FOR SOFT FLOORING: Upholstery: Stinson, Fuse, Tangelo	floor	25.25"W 22.25'1'D 33"H	None
OPVI	0700	2	Bookcase/Lateral file combination unit; High Pressure Laminate: Columbian Walnut?	floor	36"w x20"d x68"h	none
OPVI	1500	1	Workstation, Furniture System, Upper & Lower Storage: Laminate-Columbian Walnut; Fabric-Mandarian	floor	Various	E 115V Quads: Data-Comm
OPOI	2941	1	Telephone, Standard Desk: TO BE SPECIFIED BY OWNER	desktop	10"D X 8"W X 4"H	Data-Com
OPVI	3039a	1	Wastebasket, Rectangular, plastic, water/fire resistant,28qt	floor	14lx11wx16h	None
CPCI	3115	1	Robe Hook, Double	wall	6x6x3	None
OPOI	3907	1	Computer With Dual Monitor, Wireless Keyboard & Mouse; TO BE SPECIFIED BY OWNER	desk top	TBD	E 115V; Data

ARCH ROOM NO 2009

ROOM TITLE STORAGE, MEDIA

GROUP	EQNO	QTY	DESCRIPTION	LOCATION	SIZE-STD	UTILITIES
OPVI	0440	2	Cart, Book, 2 shelf, 1 Sided: Color-Black	floor	26”W X 14”D X 32”H	None

ARCH ROOM NO 2010

ROOM TITLE REBOOT ROOM

GROUP	EQNO	QTY	DESCRIPTION	LOCATION	SIZE-STD	UTILITIES
OPVI	1021	1	Chair, Massage; Style, Size, Features TBD: BLACK SOFHYDE 100-AT61-001	floor	Allow 30"w x 70"l x45" Upright	E 120V
OPVI	1027b	2	Seating, 1 Person, Upholstered: Club Style; Design Features TBD; LOBBY; NEROLI & TANGELO	floor	32"W 33.5"D 28.25"H	None
CPCI	1054	1	Clock System, Synchronized; Analogue, With Second Hand; Sized Appropriate for Space; Control System	wall	VARIES	E; Low Voltage
OPVI	1206	3	Lamp, Floor, Decorator, 3 level bulb	floor	17" diam x 60"	E 115V
OPVI	1423	3	Table, Library stations; No Modesty Panel, Static:	floor	48"l x 24"d x 29"h	None
OPVI	1809	3	Chair, Gaming; Reclines; High Back; On Casters; Upholstery-Black & Orange	floor	29"w x 27"d x 50"h	None
OPVI	3043	1	Wastebasket, Stainless Steel, Half Moon Shape 12 gal; Open Top; Perforated Panel	floor	18"w x32"hx12"D	None

OPOI	3903v	1	Computer, FOR VIRTUAL REALITY with 27" monitors: SPECS BY OWNER I.T. DEPT	table top	24.75"w x18"h x 4"d	E 115V; Data Com
OPOI	3903x	2	Computer, Gaming with 27" monitors; for Bio Feed Back/TX: SPECS BY OWNER I.T. DEPT	table top	24.75"w x18"h x 4"d	E 115V; Data Com

ARCH ROOM NO 2011

ROOM TITLE STUDY, SC 1

GROUP	EQNO	QTY	DESCRIPTION	LOCATION	SIZE-STD	UTILITIES
OPVI	0150a	8	Chair, Rotary,Std Mesh Back,5-Legged, HARD CASTERS-SOFT Flooring ,Ergonomic,Adj Arms, Black	floor	28.25"W 25.25"D 42.25”-47”H	None
OPOI	1464b	1	Workstation, Study (SET OF 2 Carrels);w/dividers between stations & key locking overhead storage	floor	DETAILS BY OWNER	E 115V Quad; Data Com
OPOI	1464e	1	Workstation, Study (SET OF 6 Carrels);w/dividers between stations & key locking overhead storage	floor	DETAILS BY OWNER	E 115V Quad; Data Com
OPVI	3043	1	Wastebasket, Stainless Steel, Half Moon Shape 12 gal; Open Top; Perforated Panel	floor	18"w x32"hx12"D	None
CPCI	3126	1	Hooks, Coat & Bag; Refer to Interior Elevations; REQUIRES HEAVY DUTY BACKING	WALL MT	Refer to Interior Elevations	None

ARCH ROOM NO 2012

ROOM TITLE JANITORIAL, LEVEL 2

GROUP	EQNO	QTY	DESCRIPTION	LOCATION	SIZE-STD	UTILITIES
OPVI	2265	3	Shelving, Wall; 2 Stainless Steel shelfs for supply storage: REQUIRES BACKING	wall mounted	12"d x 36"w	None
OPOI	2609	1	Rack, Wall Mounted to hold mops, etc…WILL REQUIRE BACKING	wall	36"w x 1.5"d x 5"h	None
OPOI	3048	1	Truck, Janitorial, Mobile, Locked Storage/2 Buckets/Wringer, Trash collection (FINISHING TOUCHES)	floor	20x50x38	None
OPOI	3049	1	Mops, Mop Heads, Dust Mops, etc…for Janitorial Cleaning (FINISHING TOUCHES)	stored	VARIES	None
OPOI	3051	1	Vacuum, Upright; Commercial; with attachments (FINISHING TOUCHES)	floor/stored	18"w x 13"d x 44"h	E 120V

ARCH ROOM NO 2015

ROOM TITLE STUDY, SC 2

GROUP	EQNO	QTY	DESCRIPTION	LOCATION	SIZE-STD	UTILITIES
OPVI	0150a	8	Chair, Rotary,Std Mesh Back,5-Legged, HARD CASTERS-SOFT Flooring ,Ergonomic,Adj Arms, Black	floor	28.25"W 25.25"D 42.25”-47”H	None
OPOI	1464	1	Workstation, Study (SET OF 5 Carrels);w/dividers between stations & key locking overhead storage	floor	DETAILS BY OWNER	E 115V Quad; Data Com

OPOI	1464a	1	Workstation, Study (SET OF 3 Carrels);w/dividers between stations & key locking overhead storage	floor	DETAILS BY OWNER	E 115V Quad; Data Com
OPVI	3043	1	Wastebasket, Stainless Steel, Half Moon Shape 12 gal; Open Top; Perforated Panel	floor	18"w x32"hx12"D	None
CPCI	3126	1	Hooks, Coat & Bag; Refer to Interior Elevations; REQUIRES HEAVY DUTY BACKING	WALL MT	Refer to Interior Elevations	None

ARCH ROOM NO **2016**

ROOM TITLE **OFFICE, STUDENT SENATE**

GROUP	EQNO	QTY	DESCRIPTION	LOCATION	SIZE-STD	UTILITIES
OPVI	0212a	10	Chair, Conference Type; MOLDED PLASTIC BACK & SEAT On Hard Casters For Carpet	floor	25.875"W 21.3125"D 32.625"H	None
OPVI	0430b	1	Cabinet, Filing 5 drawer, Vertical, Locking: Color: Loft	floor	28.5”D X 18.25”W X 60”H	None
CPCI	1054	1	Clock System, Synchronized; Analogue, With Second Hand; Sized Appropriate for Space; Control System	wall	VARIES	E; Low Voltage
OPVI	1402c	1	Table, Conference, POWER for table; 2 Data for Phones; DETAILS & FINISH TBD	floor	120"L X 42"D X 30"H	None
CPCI	2523	2	Board, Marker; Large for Stage Area/Conference Spaces; Wall Mounted	wall	8'w x 4'h x2"d	None
OPOI	2945	1	Telephone, Conference: TO BE SPECIFIED BY OWNER	desktop	14X13X3	E 115V; Data-Com
OPVI	3062b	1	Wastebasket, Office,Tall, 23 gallon, Open Top; COLOR: GRAY	floor	11"w x 22"d x 30"h	None
OPOI	3903	2	Computer,Personal & Monitor, Wireless Keyboard & Mouse for Desk Use: TO BE SPECIFIED BY OWNER	desktop	24"w x 18"d x 22"h	E 115V; Data
OPOI	4103	1	Podium, Cabinet, Audio/Visual, Portable, For Up TO 2 PC & DUAL MONITOR; SPECS BY I.T. DEPT/3RD	floor	TBD By Design	E 115V Quad; 2 Data/?Com
OPOI	4109	1	Microphone, Ceiling Hung; Poly Com or Comparable, for Meeting Rooms: SPECIFIED BY OWNER I.T. DEPT	ceiling	TBD BY I.T.	TBD
OPOI	4110	1	Cam, Web or Poly Com Cam for Meeting Rooms: TO SPECIFIED BY OWNER I.T. DEPT	wall mount	TBD BY I.T.	TBD
OPOI	4131	1	Television Monitor, Flat Panel, 65"; Wall Mount; REQ BACKING: DETAILS BY I.T. & 3RD PARTY VENDOR	wall/ceiling mt	57.6"w x 2.5"d x 33.2"h	E 115V; Data

ARCH ROOM NO **2017**

ROOM TITLE **STUDY, GROUP 10**

GROUP	EQNO	QTY	DESCRIPTION	LOCATION	SIZE-STD	UTILITIES
OPVI	0212a	10	Chair, Conference Type; MOLDED PLASTIC BACK & SEAT On Hard Casters For Carpet	floor	25.875"W 21.3125"D 32.625"H	None

OPVI	1005a	1	Chair, Side,MOLDED PLASTIC BACK & SEAT: HARD BLACK CASTERS FOR CARPET	floor	23"W 18.3125"D 32.625"H	None
CPCI	1054	1	Clock System, Synchronized; Analogue, With Second Hand; Sized Appropriate for Space; Control System	wall	VARIES	E; Low Voltage
OPVI	1403b	4	Table, Educational Type, Flip Top, Nesting w/Optional Casters	floor	72"l x24"d x30"h	Req Access To Floor Utilities
OPOI	2944	1	Telephone, Wall Mounted: TO BE SPECIFIED BY OWNER	wall	8x3X10	Comm.
OPVI	3043	1	Wastebasket, Stainless Steel, Half Moon Shape 12 gal; Open Top; Perforated Panel	floor	18"w x32"hx12"D	None
OPOI	3907	1	Computer With Dual Monitor, Wireless Keyboard & Mouse; TO BE SPECIFIED BY OWNER	desk top	TBD	E 115V; Data
OPOI	4102	1	Cabinet, Audio/Visual, Portable, For 1 PC & MONITOR; SPECS TBD BY I.T. DEPT/3RD PARTY VENDOR	floor	TBD By Design	E 115V Quad; Data/?Com
OPOI	4109	1	Microphone, Ceiling Hung; Poly Com or Comparable, for Meeting Rooms: SPECIFIED BY OWNER I.T. DEPT	ceiling	TBD BY I.T.	TBD
OPOI	4110	1	Cam, Web or Poly Com Cam for Meeting Rooms: TO SPECIFIED BY OWNER I.T. DEPT	wall mount	TBD BY I.T.	TBD
OPOI	4131	1	Television Monitor, Flat Panel, 65"; Wall Mount; REQ BACKING: DETAILS BY I.T. & 3RD PARTY VENDOR	wall/ceiling mt	57.6"w x 2.5"d x 33.2"h	E 115V; Data
OPOI	4149	1	Scheduling System for Conference Room areas; 7" monitor display to be mtd outside of mtg space	wall mount	8.07"w x5.12"h x2.6"d	POE

ARCH ROOM NO **2018**

ROOM TITLE **STUDY, SC 4**

GROUP	EQNO	QTY	DESCRIPTION	LOCATION	SIZE-STD	UTILITIES
OPVI	0150a	6	Chair, Rotary,Std Mesh Back,5-Legged, HARD CASTERS-SOFT Flooring ,Ergonomic,Adj Arms, Black	floor	28.25"W 25.25"D 42.25”-47”H	None
OPOI	1464a	2	Workstation, Study (SET OF 3 Carrels);w/dividers between stations & key locking overhead storage	floor	DETAILS BY OWNER	E 115V Quad; Data Com
OPVI	3043	1	Wastebasket, Stainless Steel, Half Moon Shape 12 gal; Open Top; Perforated Panel	floor	18"w x32"hx12"D	None
CPCI	3126	1	Hooks, Coat & Bag; Refer to Interior Elevations; REQUIRES HEAVY DUTY BACKING	WALL MT	Refer to Interior Elevations	None

ARCH ROOM NO **2019**

ROOM TITLE **STUDY, GROUP 9**

GROUP	EQNO	QTY	DESCRIPTION	LOCATION	SIZE-STD	UTILITIES
OPVI	0212a	10	Chair, Conference Type; MOLDED PLASTIC BACK & SEAT On Hard Casters For Carpet	floor	25.875"W 21.3125"D 32.625"H	None

OPVI	1005a	1	Chair, Side,MOLDED PLASTIC BACK & SEAT: HARD BLACK CASTERS FOR CARPET	floor	23"W 18.3125"D 32.625"H	None
CPCI	1054	1	Clock System, Synchronized; Analogue, With Second Hand; Sized Appropriate for Space; Control System	wall	VARIES	E; Low Voltage
OPVI	1403b	4	Table, Educational Type, Flip Top, Nesting w/Optional Casters	floor	72"l x24"d x30"h	Req Access To Floor Utilities
OPOI	2944	1	Telephone, Wall Mounted: TO BE SPECIFIED BY OWNER	wall	8x3X10	Comm.
OPVI	3043	1	Wastebasket, Stainless Steel, Half Moon Shape 12 gal; Open Top; Perforated Panel	floor	18"w x32"hx12"D	None
OPOI	3907	1	Computer With Dual Monitor, Wireless Keyboard & Mouse; TO BE SPECIFIED BY OWNER	desk top	TBD	E 115V; Data
OPOI	4102	1	Cabinet, Audio/Visual, Portable, For 1 PC & MONITOR; SPECS TBD BY I.T. DEPT/3RD PARTY VENDOR	floor	TBD By Design	E 115V Quad; Data/?Com
OPOI	4109	1	Microphone, Ceiling Hung; Poly Com or Comparable, for Meeting Rooms: SPECIFIED BY OWNER I.T. DEPT	ceiling	TBD BY I.T.	TBD
OPOI	4110	1	Cam, Web or Poly Com Cam for Meeting Rooms: TO SPECIFIED BY OWNER I.T. DEPT	wall mount	TBD BY I.T.	TBD
OPOI	4131	1	Television Monitor, Flat Panel, 65"; Wall Mount; REQ BACKING: DETAILS BY I.T. & 3RD PARTY VENDOR	wall/ceiling mt	57.6"w x 2.5"d x 33.2"h	E 115V; Data
OPOI	4149	1	Scheduling System for Conference Room areas; 7" monitor display to be mtd outside of mtg space	wall mount	8.07"w x5.12"h x2.6"d	POE

ARCH ROOM NO **2020**

ROOM TITLE **STUDY, SC 3**

GROUP	EQNO	QTY	DESCRIPTION	LOCATION	SIZE-STD	UTILITIES
OPVI	0150a	8	Chair, Rotary,Std Mesh Back,5-Legged, HARD CASTERS-SOFT Flooring ,Ergonomic,Adj Arms, Black	floor	28.25"W 25.25"D 42.25”-47”H	None
OPOI	1464	1	Workstation, Study (SET OF 5 Carrels);w/dividers between stations & key locking overhead storage	floor	DETAILS BY OWNER	E 115V Quad; Data Com
OPOI	1464a	1	Workstation, Study (SET OF 3 Carrels);w/dividers between stations & key locking overhead storage	floor	DETAILS BY OWNER	E 115V Quad; Data Com
OPVI	3043	1	Wastebasket, Stainless Steel, Half Moon Shape 12 gal; Open Top; Perforated Panel	floor	18"w x32"hx12"D	None
CPCI	3126	1	Hooks, Coat & Bag; Refer to Interior Elevations; REQUIRES HEAVY DUTY BACKING	WALL MT	Refer to Interior Elevations	None

ARCH ROOM NO **2021**

ROOM TITLE **STUDY, GROUP 8**

GROUP	EQNO	QTY	DESCRIPTION	LOCATION	SIZE-STD	UTILITIES

OPVI	0212a	10	Chair, Conference Type; MOLDED PLASTIC BACK & SEAT On Hard Casters For Carpet	floor	25.875"W 21.3125"D 32.625"H	None
OPVI	1005a	1	Chair, Side,MOLDED PLASTIC BACK & SEAT: HARD BLACK CASTERS FOR CARPET	floor	23"W 18.3125"D 32.625"H	None
CPCI	1054	1	Clock System, Synchronized; Analogue, With Second Hand; Sized Appropriate for Space; Control System	wall	VARIES	E; Low Voltage
OPVI	1403b	4	Table, Educational Type, Flip Top, Nesting w/Optional Casters	floor	72"l x24"d x30"h	Req Access To Floor Utilities
OPOI	2944	1	Telephone, Wall Mounted: TO BE SPECIFIED BY OWNER	wall	8x3X10	Comm.
OPVI	3043	1	Wastebasket, Stainless Steel, Half Moon Shape 12 gal; Open Top; Perforated Panel	floor	18"w x32"hx12"D	None
OPOI	3907	1	Computer With Dual Monitor, Wireless Keyboard & Mouse; TO BE SPECIFIED BY OWNER	desk top	TBD	E 115V; Data
OPOI	4102	1	Cabinet, Audio/Visual, Portable, For 1 PC & MONITOR; SPECS TBD BY I.T. DEPT/3RD PARTY VENDOR	floor	TBD By Design	E 115V Quad; Data/?Com
OPOI	4109	1	Microphone, Ceiling Hung; Poly Com or Comparable, for Meeting Rooms: SPECIFIED BY OWNER I.T. DEPT	ceiling	TBD BY I.T.	TBD
OPOI	4110	1	Cam, Web or Poly Com Cam for Meeting Rooms: TO SPECIFIED BY OWNER I.T. DEPT	wall mount	TBD BY I.T.	TBD
OPOI	4131	1	Television Monitor, Flat Panel, 65"; Wall Mount; REQ BACKING: DETAILS BY I.T. & 3RD PARTY VENDOR	wall/ceiling mt	57.6"w x 2.5"d x 33.2"h	E 115V; Data
OPOI	4149	1	Scheduling System for Conference Room areas; 7" monitor display to be mtd outside of mtg space	wall mount	8.07"w x5.12"h x2.6"d	POE

ARCH ROOM NO **2022**

ROOM TITLE **STUDY, SC 5**

GROUP	EQNO	QTY	DESCRIPTION	LOCATION	SIZE-STD	UTILITIES
OPVI	0150a	8	Chair, Rotary,Std Mesh Back,5-Legged, HARD CASTERS-SOFT Flooring ,Ergonomic,Adj Arms, Black	floor	28.25"W 25.25"D 42.25”-47”H	None
OPOI	1464	1	Workstation, Study (SET OF 5 Carrels);w/dividers between stations & key locking overhead storage	floor	DETAILS BY OWNER	E 115V Quad; Data Com
OPOI	1464a	1	Workstation, Study (SET OF 3 Carrels);w/dividers between stations & key locking overhead storage	floor	DETAILS BY OWNER	E 115V Quad; Data Com
OPVI	3043	1	Wastebasket, Stainless Steel, Half Moon Shape 12 gal; Open Top; Perforated Panel	floor	18"w x32"hx12"D	None
CPCI	3126	1	Hooks, Coat & Bag; Refer to Interior Elevations; REQUIRES HEAVY DUTY BACKING	WALL MT	Refer to Interior Elevations	None

ARCH ROOM NO 2023

ROOM TITLE STUDY, SC 9

GROUP	EQNO	QTY	DESCRIPTION	LOCATION	SIZE-STD	UTILITIES
OPVI	0150a	8	Chair, Rotary,Std Mesh Back,5-Legged, HARD CASTERS-SOFT Flooring ,Ergonomic,Adj Arms, Black	floor	28.25"W 25.25"D 42.25”-47”H	None
OPOI	1464	1	Workstation, Study (SET OF 5 Carrels);w/dividers between stations & key locking overhead storage	floor	DETAILS BY OWNER	E 115V Quad; Data Com
OPOI	1464a	1	Workstation, Study (SET OF 3 Carrels);w/dividers between stations & key locking overhead storage	floor	DETAILS BY OWNER	E 115V Quad; Data Com
OPVI	3043	1	Wastebasket, Stainless Steel, Half Moon Shape 12 gal; Open Top; Perforated Panel	floor	18"w x32"hx12"D	None
CPCI	3126	1	Hooks, Coat & Bag; Refer to Interior Elevations; REQUIRES HEAVY DUTY BACKING	WALL MT	Refer to Interior Elevations	None

ARCH ROOM NO 2024

ROOM TITLE STUDY, SC 6

GROUP	EQNO	QTY	DESCRIPTION	LOCATION	SIZE-STD	UTILITIES
OPVI	0150a	8	Chair, Rotary,Std Mesh Back,5-Legged, HARD CASTERS-SOFT Flooring ,Ergonomic,Adj Arms, Black	floor	28.25"W 25.25"D 42.25”-47”H	None
OPOI	1464	1	Workstation, Study (SET OF 5 Carrels);w/dividers between stations & key locking overhead storage	floor	DETAILS BY OWNER	E 115V Quad; Data Com
OPOI	1464a	1	Workstation, Study (SET OF 3 Carrels);w/dividers between stations & key locking overhead storage	floor	DETAILS BY OWNER	E 115V Quad; Data Com
OPVI	3043	1	Wastebasket, Stainless Steel, Half Moon Shape 12 gal; Open Top; Perforated Panel	floor	18"w x32"hx12"D	None
CPCI	3126	1	Hooks, Coat & Bag; Refer to Interior Elevations; REQUIRES HEAVY DUTY BACKING	WALL MT	Refer to Interior Elevations	None

ARCH ROOM NO 2025

ROOM TITLE STUDY, SC 7

GROUP	EQNO	QTY	DESCRIPTION	LOCATION	SIZE-STD	UTILITIES
OPVI	0150a	8	Chair, Rotary,Std Mesh Back,5-Legged, HARD CASTERS-SOFT Flooring ,Ergonomic,Adj Arms, Black	floor	28.25"W 25.25"D 42.25”-47”H	None
OPOI	1464	1	Workstation, Study (SET OF 5 Carrels);w/dividers between stations & key locking overhead storage	floor	DETAILS BY OWNER	E 115V Quad; Data Com
OPOI	1464a	1	Workstation, Study (SET OF 3 Carrels);w/dividers between stations & key locking overhead storage	floor	DETAILS BY OWNER	E 115V Quad; Data Com
OPVI	3043	1	Wastebasket, Stainless Steel, Half Moon Shape 12 gal; Open Top; Perforated Panel	floor	18"w x32"hx12"D	None

CPCI	3126	1	Hooks, Coat & Bag; Refer to Interior Elevations; REQUIRES HEAVY DUTY BACKING	WALL MT	Refer to Interior Elevations	None

ARCH ROOM NO 2026

ROOM TITLE STUDY, SC 8

GROUP	EQNO	QTY	DESCRIPTION	LOCATION	SIZE-STD	UTILITIES
OPVI	0150a	8	Chair, Rotary,Std Mesh Back,5-Legged, HARD CASTERS-SOFT Flooring ,Ergonomic,Adj Arms, Black	floor	28.25"W 25.25"D 42.25”-47”H	None
OPOI	1464	1	Workstation, Study (SET OF 5 Carrels);w/dividers between stations & key locking overhead storage	floor	DETAILS BY OWNER	E 115V Quad; Data Com
OPOI	1464a	1	Workstation, Study (SET OF 3 Carrels);w/dividers between stations & key locking overhead storage	floor	DETAILS BY OWNER	E 115V Quad; Data Com
OPVI	3043	1	Wastebasket, Stainless Steel, Half Moon Shape 12 gal; Open Top; Perforated Panel	floor	18"w x32"hx12"D	None
CPCI	3126	1	Hooks, Coat & Bag; Refer to Interior Elevations; REQUIRES HEAVY DUTY BACKING	WALL MT	Refer to Interior Elevations	None

ARCH ROOM NO 2028

ROOM TITLE STUDY, SC 10

GROUP	EQNO	QTY	DESCRIPTION	LOCATION	SIZE-STD	UTILITIES
OPVI	0150a	8	Chair, Rotary,Std Mesh Back,5-Legged, HARD CASTERS-SOFT Flooring ,Ergonomic,Adj Arms, Black	floor	28.25"W 25.25"D 42.25”-47”H	None
OPOI	1464	1	Workstation, Study (SET OF 5 Carrels);w/dividers between stations & key locking overhead storage	floor	DETAILS BY OWNER	E 115V Quad; Data Com
OPOI	1464b	1	Workstation, Study (SET OF 2 Carrels);w/dividers between stations & key locking overhead storage	floor	DETAILS BY OWNER	E 115V Quad; Data Com
OPOI	1464d	1	Workstation, Study (SET OF 1 Carrel);w/dividers between stations & key locking overhead storage	floor	DETAILS BY OWNER	E 115V Quad; Data Com
OPVI	3043	1	Wastebasket, Stainless Steel, Half Moon Shape 12 gal; Open Top; Perforated Panel	floor	18"w x32"hx12"D	None
CPCI	3126	1	Hooks, Coat & Bag; Refer to Interior Elevations; REQUIRES HEAVY DUTY BACKING	WALL MT	Refer to Interior Elevations	None

ARCH ROOM NO 2029

ROOM TITLE STUDY, STUDENT 3

GROUP	EQNO	QTY	DESCRIPTION	LOCATION	SIZE-STD	UTILITIES
OPVI	0150a	8	Chair, Rotary,Std Mesh Back,5-Legged, HARD CASTERS-SOFT Flooring ,Ergonomic,Adj Arms, Black	floor	28.25"W 25.25"D 42.25”-47”H	None
OPVI	1403b	4	Table, Educational Type, Flip Top, Nesting w/Optional Casters	floor	72"l x24"d x30"h	Req Access To Floor Utilities

OPOI	1465	1	Workstation, Study (Carrels); FUTURE PURCHASE; w/dividers between stations, locking overhead	floor	DETAILS BY OWNER	E 115V; Data Com FOR FUTURE USE
OPVI	3043	1	Wastebasket, Stainless Steel, Half Moon Shape 12 gal; Open Top; Perforated Panel	floor	18"w x32"hx12"D	None
CPCI	3126	1	Hooks, Coat & Bag; Refer to Interior Elevations; REQUIRES HEAVY DUTY BACKING	WALL MT	Refer to Interior Elevations	None

ARCH ROOM NO **2030**

ROOM TITLE **STUDY, SC 11**

GROUP	EQNO	QTY	DESCRIPTION	LOCATION	SIZE-STD	UTILITIES
OPVI	0150a	8	Chair, Rotary,Std Mesh Back,5-Legged, HARD CASTERS-SOFT Flooring ,Ergonomic,Adj Arms, Black	floor	28.25"W 25.25"D 42.25”-47”H	None
OPOI	1464	1	Workstation, Study (SET OF 5 Carrels);w/dividers between stations & key locking overhead storage	floor	DETAILS BY OWNER	E 115V Quad; Data Com
OPOI	1464a	1	Workstation, Study (SET OF 3 Carrels);w/dividers between stations & key locking overhead storage	floor	DETAILS BY OWNER	E 115V Quad; Data Com
OPVI	3043	1	Wastebasket, Stainless Steel, Half Moon Shape 12 gal; Open Top; Perforated Panel	floor	18"w x32"hx12"D	None
CPCI	3126	1	Hooks, Coat & Bag; Refer to Interior Elevations; REQUIRES HEAVY DUTY BACKING	WALL MT	Refer to Interior Elevations	None

ARCH ROOM NO **2031**

ROOM TITLE **STUDY, STUDENT 4**

GROUP	EQNO	QTY	DESCRIPTION	LOCATION	SIZE-STD	UTILITIES
OPVI	0150a	8	Chair, Rotary,Std Mesh Back,5-Legged, HARD CASTERS-SOFT Flooring ,Ergonomic,Adj Arms, Black	floor	28.25"W 25.25"D 42.25”-47”H	None
OPVI	1403b	4	Table, Educational Type, Flip Top, Nesting w/Optional Casters	floor	72"l x24"d x30"h	Req Access To Floor Utilities
OPOI	1465	1	Workstation, Study (Carrels); FUTURE PURCHASE; w/dividers between stations, locking overhead	floor	DETAILS BY OWNER	E 115V; Data Com FOR FUTURE USE
OPVI	3043	1	Wastebasket, Stainless Steel, Half Moon Shape 12 gal; Open Top; Perforated Panel	floor	18"w x32"hx12"D	None
CPCI	3126	1	Hooks, Coat & Bag; Refer to Interior Elevations; REQUIRES HEAVY DUTY BACKING	WALL MT	Refer to Interior Elevations	None

ARCH ROOM NO **2032**

ROOM TITLE **STUDY, SC 12**

GROUP	EQNO	QTY	DESCRIPTION	LOCATION	SIZE-STD	UTILITIES
OPVI	0150a	8	Chair, Rotary,Std Mesh Back,5-Legged, HARD CASTERS-SOFT Flooring ,Ergonomic,Adj Arms, Black	floor	28.25"W 25.25"D 42.25”-47”H	None

OPOI	1464	1	Workstation, Study (SET OF 5 Carrels);w/dividers between stations & key locking overhead storage	floor	DETAILS BY OWNER	E 115V Quad; Data Com
OPOI	1464a	1	Workstation, Study (SET OF 3 Carrels);w/dividers between stations & key locking overhead storage	floor	DETAILS BY OWNER	E 115V Quad; Data Com
OPVI	3043	1	Wastebasket, Stainless Steel, Half Moon Shape 12 gal; Open Top; Perforated Panel	floor	18"w x32"hx12"D	None
CPCI	3126	1	Hooks, Coat & Bag; Refer to Interior Elevations; REQUIRES HEAVY DUTY BACKING	WALL MT	Refer to Interior Elevations	None

ARCH ROOM NO 2033

ROOM TITLE STUDY, STUDENT 5

GROUP	EQNO	QTY	DESCRIPTION	LOCATION	SIZE-STD	UTILITIES
OPVI	0150a	8	Chair, Rotary,Std Mesh Back,5-Legged, HARD CASTERS-SOFT Flooring ,Ergonomic,Adj Arms, Black	floor	28.25"W 25.25"D 42.25”-47”H	None
OPVI	1403b	4	Table, Educational Type, Flip Top, Nesting w/Optional Casters	floor	72"l x24"d x30"h	Req Access To Floor Utilities
OPOI	1465	1	Workstation, Study (Carrels); FUTURE PURCHASE; w/dividers between stations, locking overhead	floor	DETAILS BY OWNER	E 115V; Data Com FOR FUTURE USE
OPVI	3043	1	Wastebasket, Stainless Steel, Half Moon Shape 12 gal; Open Top; Perforated Panel	floor	18"w x32"hx12"D	None
CPCI	3126	1	Hooks, Coat & Bag; Refer to Interior Elevations; REQUIRES HEAVY DUTY BACKING	WALL MT	Refer to Interior Elevations	None

ARCH ROOM NO 2034

ROOM TITLE TOILET, FAMILY

GROUP	EQNO	QTY	DESCRIPTION	LOCATION	SIZE-STD	UTILITIES
OPVI	3043c	1	Waste Container, Drop in Top, Suitable for Restroom Areas, 15 gallon, Textured Black	floor	15" diameter x 30"h	None
OPOI	3100	1	Dispenser, Paper Towel: TYPE TBD ? BY OWNER-CURRENT JANITORIAL SERVICE	wall mount	TBD	None
OPOI	3102	1	Dispenser, Soap: SPECIFICATIONS & Type TBD BY OWNER	wall mount	7"w x4"d x11.5"h	None
CPCI	3115	1	Robe Hook, Double	wall	6x6x3	None

ARCH ROOM NO 2035

ROOM TITLE STUDY, STUDENT 6

GROUP	EQNO	QTY	DESCRIPTION	LOCATION	SIZE-STD	UTILITIES
OPVI	0150a	8	Chair, Rotary,Std Mesh Back,5-Legged, HARD CASTERS-SOFT Flooring ,Ergonomic,Adj Arms, Black	floor	28.25"W 25.25"D 42.25”-47”H	None

OPVI	1403b	4	Table, Educational Type, Flip Top, Nesting w/Optional Casters	floor	72"l x24"d x30"h	Req Access To Floor Utilities
OPOI	1465	1	Workstation, Study (Carrels); FUTURE PURCHASE; w/dividers between stations, locking overhead	floor	DETAILS BY OWNER	E 115V; Data Com FOR FUTURE USE
OPVI	3043	1	Wastebasket, Stainless Steel, Half Moon Shape 12 gal; Open Top; Perforated Panel	floor	18"w x32"hx12"D	None
CPCI	3126	1	Hooks, Coat & Bag; Refer to Interior Elevations; REQUIRES HEAVY DUTY BACKING	WALL MT	Refer to Interior Elevations	None

ARCH ROOM NO 2036

ROOM TITLE STUDY, SC 13

GROUP	EQNO	QTY	DESCRIPTION	LOCATION	SIZE-STD	UTILITIES
OPVI	0150a	8	Chair, Rotary,Std Mesh Back,5-Legged, HARD CASTERS-SOFT Flooring ,Ergonomic,Adj Arms, Black	floor	28.25"W 25.25"D 42.25”-47”H	None
OPOI	1464	1	Workstation, Study (SET OF 5 Carrels);w/dividers between stations & key locking overhead storage	floor	DETAILS BY OWNER	E 115V Quad; Data Com
OPOI	1464a	1	Workstation, Study (SET OF 3 Carrels);w/dividers between stations & key locking overhead storage	floor	DETAILS BY OWNER	E 115V Quad; Data Com
OPVI	3043	1	Wastebasket, Stainless Steel, Half Moon Shape 12 gal; Open Top; Perforated Panel	floor	18"w x32"hx12"D	None
CPCI	3126	1	Hooks, Coat & Bag; Refer to Interior Elevations; REQUIRES HEAVY DUTY BACKING	WALL MT	Refer to Interior Elevations	None

ARCH ROOM NO 2037

ROOM TITLE STUDY, STUDENT 7

GROUP	EQNO	QTY	DESCRIPTION	LOCATION	SIZE-STD	UTILITIES
OPVI	0150a	8	Chair, Rotary,Std Mesh Back,5-Legged, HARD CASTERS-SOFT Flooring ,Ergonomic,Adj Arms, Black	floor	28.25"W 25.25"D 42.25”-47”H	None
OPVI	1403b	4	Table, Educational Type, Flip Top, Nesting w/Optional Casters	floor	72"l x24"d x30"h	Req Access To Floor Utilities
OPOI	1465	1	Workstation, Study (Carrels); FUTURE PURCHASE; w/dividers between stations, locking overhead	floor	DETAILS BY OWNER	E 115V; Data Com FOR FUTURE USE
OPVI	3043	1	Wastebasket, Stainless Steel, Half Moon Shape 12 gal; Open Top; Perforated Panel	floor	18"w x32"hx12"D	None
CPCI	3126	1	Hooks, Coat & Bag; Refer to Interior Elevations; REQUIRES HEAVY DUTY BACKING	WALL MT	Refer to Interior Elevations	None

ARCH ROOM NO 2038

ROOM TITLE STUDY, SC 14

GROUP	EQNO	QTY	DESCRIPTION	LOCATION	SIZE-STD	UTILITIES

OPVI	0150a	8	Chair, Rotary,Std Mesh Back,5-Legged, HARD CASTERS-SOFT Flooring ,Ergonomic,Adj Arms, Black	floor	28.25"W 25.25"D 42.25”-47”H	None
OPOI	1464	1	Workstation, Study (SET OF 5 Carrels);w/dividers between stations & key locking overhead storage	floor	DETAILS BY OWNER	E 115V Quad; Data Com
OPOI	1464a	1	Workstation, Study (SET OF 3 Carrels);w/dividers between stations & key locking overhead storage	floor	DETAILS BY OWNER	E 115V Quad; Data Com
OPVI	3043	1	Wastebasket, Stainless Steel, Half Moon Shape 12 gal; Open Top; Perforated Panel	floor	18"w x32"hx12"D	None
CPCI	3126	1	Hooks, Coat & Bag; Refer to Interior Elevations; REQUIRES HEAVY DUTY BACKING	WALL MT	Refer to Interior Elevations	None

ARCH ROOM NO **2039**

ROOM TITLE **TOILET, FAMILY**

GROUP	EQNO	QTY	DESCRIPTION	LOCATION	SIZE-STD	UTILITIES
OPVI	3043c	1	Waste Container, Drop in Top, Suitable for Restroom Areas, 15 gallon, Textured Black	floor	15" diameter x 30"h	None
OPOI	3100	1	Dispenser, Paper Towel: TYPE TBD ? BY OWNER-CURRENT JANITORIAL SERVICE	wall mount	TBD	None
OPOI	3102	1	Dispenser, Soap: SPECIFICATIONS & Type TBD BY OWNER	wall mount	7"w x4"d x11.5"h	None
CPCI	3115	1	Robe Hook, Double	wall	6x6x3	None

ARCH ROOM NO **2040**

ROOM TITLE **WAITING, CLINICAL EXAM**

GROUP	EQNO	QTY	DESCRIPTION	LOCATION	SIZE-STD	UTILITIES
OPVI	0681	1	Cabinet, Credenza; Suitable for display of teaching materials; w/locking doors: Laminate Asian Night	floor	72"W x 24"D x 36"H	None
OPVI	1019a	2	Chair, Tandom, Group of 4 seats w/various arm arrangements & 1 END TABLE	floor	72.125"W 29"D 36.5"H	None
OPVI	1019b	2	Chair, Tandom, Group of 3 seats w/various arm arrnagements & 1 END TABLE	floor	24x24x32	None
OPVI	1027b	2	Seating, 1 Person, Upholstered: Club Style; Design Features TBD; LOBBY; NEROLI & TANGELO	floor	32"W 33.5"D 28.25"H	None
OPVI	1027d	2	Seating, 1 Person, Upholstered: Club Style; Design Features TBD; FABRIC; BITMAP & QUARRY	floor	32"W 33.5"D 28.25"H	None
CPCI	1054	1	Clock System, Synchronized; Analogue, With Second Hand; Sized Appropriate for Space; Control System	wall	VARIES	E; Low Voltage
OPVI	1206	1	Lamp, Floor, Decorator, 3 level bulb	floor	17" diam x 60"	E 115V

OPVI	1410a	2	Table, End, Drum Round 20" Diameter (Laminate: Mocha)	floor	20" Diameter x20"h	None
OPVI	3043	1	Wastebasket, Stainless Steel, Half Moon Shape 12 gal; Open Top; Perforated Panel	floor	18"w x32"hx12"D	None

ARCH ROOM NO **2041**

ROOM TITLE **STUDY, STUDENT 1**

GROUP	EQNO	QTY	DESCRIPTION	LOCATION	SIZE-STD	UTILITIES
OPVI	0150a	7	Chair, Rotary,Std Mesh Back,5-Legged, HARD CASTERS-SOFT Flooring ,Ergonomic,Adj Arms, Black	floor	28.25"W 25.25"D 42.25”-47”H	None
OPVI	1403b	4	Table, Educational Type, Flip Top, Nesting w/Optional Casters	floor	72"l x24"d x30"h	Req Access To Floor Utilities
OPOI	1465	1	Workstation, Study (Carrels); FUTURE PURCHASE; w/dividers between stations, locking overhead	floor	DETAILS BY OWNER	E 115V; Data Com FOR FUTURE USE
OPVI	3043	1	Wastebasket, Stainless Steel, Half Moon Shape 12 gal; Open Top; Perforated Panel	floor	18"w x32"hx12"D	None
CPCI	3126	1	Hooks, Coat & Bag; Refer to Interior Elevations; REQUIRES HEAVY DUTY BACKING	WALL MT	Refer to Interior Elevations	None

ARCH ROOM NO **2042**

ROOM TITLE **STUDY, STUDENT 2**

GROUP	EQNO	QTY	DESCRIPTION	LOCATION	SIZE-STD	UTILITIES
OPVI	0150a	8	Chair, Rotary,Std Mesh Back,5-Legged, HARD CASTERS-SOFT Flooring ,Ergonomic,Adj Arms, Black	floor	28.25"W 25.25"D 42.25”-47”H	None
OPVI	1403b	4	Table, Educational Type, Flip Top, Nesting w/Optional Casters	floor	72"l x24"d x30"h	Req Access To Floor Utilities
OPOI	1465	1	Workstation, Study (Carrels); FUTURE PURCHASE; w/dividers between stations, locking overhead	floor	DETAILS BY OWNER	E 115V; Data Com FOR FUTURE USE
OPVI	3043	1	Wastebasket, Stainless Steel, Half Moon Shape 12 gal; Open Top; Perforated Panel	floor	18"w x32"hx12"D	None
CPCI	3126	1	Hooks, Coat & Bag; Refer to Interior Elevations; REQUIRES HEAVY DUTY BACKING	WALL MT	Refer to Interior Elevations	None

ARCH ROOM NO **2043**

ROOM TITLE **CORRIDOR 2; CE PERIMETER WITH 6 WORKSTATIONS**

GROUP	EQNO	QTY	DESCRIPTION	LOCATION	SIZE-STD	UTILITIES
OPVI	0150a	1	Chair, Rotary,Std Mesh Back,5-Legged, HARD CASTERS-SOFT Flooring ,Ergonomic,Adj Arms, Black	floor	28.25"W 25.25"D 42.25”-47”H	None
OPVI	0181	5	Chair, Rotary,Std.Back, Hard BLACK Casters for Carpet Floors, NO Arms, Ext Ht For Stdg Work Surface	floor	27.5"W 27.5"D 37.5-47 ¾”H	None

CPCI	2516	6	Board, Marker, Magnetic Cleanable Surface,w/Tray, 24"w x 24"h x 1"d	wall	24"w x 24"h x 1"d	None
OPVI	3043	1	Wastebasket, Stainless Steel, Half Moon Shape 12 gal; Open Top; Perforated Panel	floor	18"w x32"hx12"D	None
CPCI	3115	6	Robe Hook, Double	wall	6x6x3	None
OPOI	3903	6	Computer,Personal & Monitor, Wireless Keyboard & Mouse for Desk Use: TO BE SPECIFIED BY OWNER	desktop	24"w x 18"d x 22"h	E 115V; Data

ARCH ROOM NO 2044

ROOM TITLE ALCOVE, COPIER; CLINICAL EXAM AREA

GROUP	EQNO	QTY	DESCRIPTION	LOCATION	SIZE-STD	UTILITIES
OPVI	3040c	1	Wastebasket, 23 Gallon, Slanted Front for easy Access; For Undercounter Areas Color GRAY	floor	11"w x22"l x25"h	None
OPSVI	3758	1	Copier, High Vol, 55ppm, MF, networkable: EXISTING LEASE BY OWNER: INSTALLED BY 3RD PARTY	floor	Typical Options Req 6 ft x 3 ft	E-Ded 120V; 20 Amps; RJ 45 Plug Data-Com
OPVI	3764	1	Shredder, Cross Cut, 16 Gallon Capacity, Ultra Quiet, 14 sheets at time shred	floor	19.7”w x15"dx 34.25”h	E Ded 120V
OPOI	3769	1	Laminator, Tabletop Model?; TO BE SPECIFIED BY OWNER I.T.	TABLETOP	16.92" L x 18.11" W x 11.14" H	E 120V

ARCH ROOM NO 2045

ROOM TITLE STORAGE, LARGE; CLINICAL SKILLS; SOUTH OF EXAM RMS

GROUP	EQNO	QTY	DESCRIPTION	LOCATION	SIZE-STD	UTILITIES
OPVI	1329	1	Stool, Bar; Static; with low profile back; no arms; small scale; Fabric: Bitmap-Sienna	floor	18.75"w x 23.75"d x 30.25"h	None
OPVI	2254	2	Shelving Unit, Open Wire Shelves, Mobile, With Bumper Guards	floor	36"w x 24"d x 69"h	None
OPVI	2254a	2	Shelving Unit, Open Wire Shelves, Mobile, with Bumper guards, drawer glide system & bins	floor	60""w x 24"d x69"h	None
OPVI	2254c	6	Shelving Unit, Open Wire Shelves, Mobile, With Bumper Guards	floor	60"w x 24" x 69"h	None
OPVI	3040c	1	Wastebasket, 23 Gallon, Slanted Front for easy Access; For Undercounter Areas Color GRAY	floor	11"w x22"l x25"h	None
OPVI	3268	1	Refrigerator, Commercial, SS, 2 Solid Doors, on casters	floor	47"w x29.5"d x84"h with casters	E Ded 115V; 5.4 Amp;5-15 NEMA Plug
OPVI	3269	1	Freezer, Commercial, SS, 2 Solid Doors, on casters	floor	47"w x 29.5"d x84"h with casters	E Ded 115V;9.6 Amps; 5-15 NEMA Plug

ARCH ROOM NO 2045A

ROOM TITLE WET AREA; CLINICAL EXAM STORAGE

GROUP	EQNO	QTY	DESCRIPTION	LOCATION	SIZE-STD	UTILITIES
OPVI	3020	1	Washer, Top Load 4.6 Cu Ft, Energy Star, With Sanitize Cycle: Stainless Steel Tub	floor	27"w x27"d install depth x31.5"D	E 120V, 20 Amp, HW,CW,D
OPVI	3021	1	Dryer, Front Load, Electric; Energy Star; High End Residential	floor	27"w x27"d install depth x31.5"D	E 240V
OPVI	3040c	1	Wastebasket, 23 Gallon, Slanted Front for easy Access; For Undercounter Areas Color GRAY	floor	11"w x22"l x25"h	None
OPOI	3088a	1	Container, Sharps: Countertop; 1 GALLON; Drop In Top: VERIFY OWNER SOURCE	Countertop	7"D x10.25"W x6"H	None
OPOI	3100	1	Dispenser, Paper Towel: TYPE TBD ? BY OWNER-CURRENT JANITORIAL SERVICE	wall mount	TBD	None
OPOI	3102	1	Dispenser, Soap: SPECIFICATIONS & Type TBD BY OWNER	wall mount	7"w x4"d x11.5"h	None
CPCI	3236a	1	Disposal, Garbage for Sink; SPECIFICATIONS TO BE PROVIDED BY MEP	attached/sink	See MFG Details	See MFG Details
OPVICI	3352a	1	Dishwasher, High End Residential, Energy Star Rated, 5 Cycle Including Sanitize, 3 Racks, SS	floor	Req Cut out: 33 7/8"h x 23 5/8"w x 24"d	E 120V; Ded 12 amp; 1440 watts; Water/Drain

ARCH ROOM NO 2046

ROOM TITLE EXAM, CLINICAL

GROUP	EQNO	QTY	DESCRIPTION	LOCATION	SIZE-STD	UTILITIES
OPVI	1005b	1	Chair, Side, No Arms, Vinyl Upholstery; SOFT BLACK CASTERS FOR HARD FLOORING	floor	23"W 18.3125"D 32.625"H	None
CPCI	1054	1	Clock System, Synchronized; Analogue, With Second Hand; Sized Appropriate for Space; Control System	wall	VARIES	E; Low Voltage
OPVI	1335a	1	Stool, No Backrest, Foot ring, Soft Casters For Hard Flooring, Pneumatic Adj. Ht.	floor	Typical 18"w x 16"d or 16" diameter	None
OPVI	1404b	1	Table, Folding, for SAM model; specifications per owner	floor	60"l x 18"d x 29"h	None
OPVI	3041	1	Wastebasket, Step-On,Plastic,Rectangular, Red/Bio Hazard 8 gallon	floor	16.26"W x15.75"D x17.25"H	None
OPVI	3062b	1	Wastebasket, Office,Tall, 23 gallon, Open Top; COLOR: GRAY	floor	11"w x 22"d x 30"h	None
OPOI	3088a	1	Container, Sharps: Countertop; 1 GALLON; Drop In Top: VERIFY OWNER SOURCE	Countertop	7"D x10.25"W x6"H	None
OPOI	3089	1	Dispenser, Quad Glove Box: finish options to be selected; Vertical or Horizontal Mount	wall mount	24"w x 12"h x 6"d	None

OPOI	3100	1	Dispenser, Paper Towel: TYPE TBD ? BY OWNER-CURRENT JANITORIAL SERVICE	wall mount	TBD	None
OPOI	3102	1	Dispenser, Soap: SPECIFICATIONS & Type TBD BY OWNER	wall mount	7"w x4"d x11.5"h	None
OPOI	3106	1	Mirror, Small, Option, To Be Located in the upper cabinet of exam rooms	inside cabinet	TBD	None
CPCI	3115	1	Robe Hook, Double	wall	6x6x3	None
OPOI	3903	1	Computer,Personal & Monitor, Wireless Keyboard & Mouse for Desk Use: TO BE SPECIFIED BY OWNER	desktop	24"w x 18"d x 22"h	E 115V; Data
OPVI	3904a	1	Workstation; Wall Mounted for Computer Monitor & Keyboard+PC Holder; Folding Design;REQUIRES	wall mount	25" W x 10" D x Up to 34"h	E 115V; Data-Com
OPOI	8302	1	Tray, Plastic, Used for transferring items to & from Mayo Stand	stored	18"w x 12"l x 1"h	None
OPOI	8303	1	Hammer, Neuro Exam; Buck 7 3/4	stored	N/A	None
OPOI	8304	1	Hammer, Neuro Exam; Tomohawk	stored	N/A	None
OPOI	8305	1	Hammer, Neuro Exam; Queens Head Babinski	stored	N/A	None
OPOI	8306	1	Tuning Fork for Neuro Exam; 128	stored	N/A	None
OPOI	8307	1	Tuning Fork for Neuro Exam; 256	stored	N/A	None
OPOI	8308	1	Tuning Fork for Neuro Exam; 512	stored	N/A	None
OPOI	8309	1	Supplies, Consumable Exam Room; All paper products, gloves, gauze, cotton balls, speculums, etc.…	stored	Varies	None
OPOI	8573	1	Light Source for Vaginal Speculum with Transformer	countertop	n/a	E 120V for charger or Battery Operated
OPOI	8710	1	Manikin, Student Auscultation, Works through Laptop; OWNER TO SPECIFY MODEL	table top	24"w x 30"l	None
OPOI	8776	1	Integrated DX Sys; Otoscope-Ophthalmoscope-BP-w/Therm; Specula Disp:BACKING REQ;WA-	board mount	30"w x 16"h x 6"d	E 115V
CPCI	8850	1	Rack, Chart, To Be Located Outside of Exam Rooms	wall	Typical 14"w x 3"d x 11"h	None

OPOI	9301	1	Stand, Mayo, Removable Tray,Adj.Ht.	floor	16x20x40	None
OPOI	9314	1	Table/Chair, Examination, Powered, Adjustable Lift Back, Stirrups: Per Owner Request	floor	full ext 75" x 24.5"w x adj ht	E: 115V
OPOI	9854	1	Sundry Jar Set of 5, for Exam Room Supplys (tongue depressors, alcohol wipes, cotton balls, etc…)	countertop	each unit approx 4" diameter x 7"h	None

ARCH ROOM NO **2047**

ROOM TITLE **EXAM, CLINICAL**

GROUP	EQNO	QTY	DESCRIPTION	LOCATION	SIZE-STD	UTILITIES
OPVI	1005b	1	Chair, Side, No Arms, Vinyl Upholstery; SOFT BLACK CASTERS FOR HARD FLOORING	floor	23"W 18.3125"D 32.625"H	None
CPCI	1054	1	Clock System, Synchronized; Analogue, With Second Hand; Sized Appropriate for Space; Control System	wall	VARIES	E; Low Voltage
OPVI	1335a	1	Stool, No Backrest, Foot ring, Soft Casters For Hard Flooring, Pneumatic Adj. Ht.	floor	Typical 18"w x 16"d or 16" diameter	None
OPVI	1404b	1	Table, Folding, for SAM model; specifications per owner	floor	60"l x 18"d x 29"h	None
OPVI	3041	1	Wastebasket, Step-On,Plastic,Rectangular, Red/Bio Hazard 8 gallon	floor	16.26"W x15.75"D x17.25"H	None
OPVI	3062b	1	Wastebasket, Office,Tall, 23 gallon, Open Top; COLOR: GRAY	floor	11"w x 22"d x 30"h	None
OPOI	3088a	1	Container, Sharps: Countertop; 1 GALLON; Drop In Top: VERIFY OWNER SOURCE	Countertop	7"D x10.25"W x6"H	None
OPOI	3089	1	Dispenser, Quad Glove Box: finish options to be selected; Vertical or Horizontal Mount	wall mount	24"w x 12"h x 6"d	None
OPOI	3100	1	Dispenser, Paper Towel: TYPE TBD ? BY OWNER-CURRENT JANITORIAL SERVICE	wall mount	TBD	None
OPOI	3102	1	Dispenser, Soap: SPECIFICATIONS & Type TBD BY OWNER	wall mount	7"w x4"d x11.5"h	None
OPOI	3106	1	Mirror, Small, Option, To Be Located in the upper cabinet of exam rooms	inside cabinet	TBD	None
CPCI	3115	1	Robe Hook, Double	wall	6x6x3	None
OPOI	3903	1	Computer,Personal & Monitor, Wireless Keyboard & Mouse for Desk Use: TO BE SPECIFIED BY OWNER	desktop	24"w x 18"d x 22"h	E 115V; Data
OPVI	3904a	1	Workstation; Wall Mounted for Computer Monitor & Keyboard+PC Holder; Folding Design;REQUIRES	wall mount	25" W x 10" D x Up to 34"h	E 115V; Data-Com

OPOI	8302	1	Tray, Plastic, Used for transferring items to & from Mayo Stand	stored	18"w x 12"l x 1"h	None
OPOI	8303	1	Hammer, Neuro Exam; Buck 7 3/4	stored	N/A	None
OPOI	8304	1	Hammer, Neuro Exam; Tomohawk	stored	N/A	None
OPOI	8305	1	Hammer, Neuro Exam; Queens Head Babinski	stored	N/A	None
OPOI	8306	1	Tuning Fork for Neuro Exam; 128	stored	N/A	None
OPOI	8307	1	Tuning Fork for Neuro Exam; 256	stored	N/A	None
OPOI	8308	1	Tuning Fork for Neuro Exam; 512	stored	N/A	None
OPOI	8309	1	Supplies, Consumable Exam Room; All paper products, gloves, gauze, cotton balls, speculums, etc.…	stored	Varies	None
OPOI	8570d	1	Light,Examination; On mobile Stand; LED; Flexible Light Pipe;	floor	21" diameter	E 115V
OPOI	8710	1	Manikin, Student Auscultation, Works through Laptop; OWNER TO SPECIFY MODEL	table top	24"w x 30"l	None
OPOI	8776	1	Integrated DX Sys; Otoscope-Ophthalmoscope-BP-w/Therm; Specula Disp:BACKING REQ;WA-	board mount	30"w x 16"h x 6"d	E 115V
CPCI	8850	1	Rack, Chart, To Be Located Outside of Exam Rooms	wall	Typical 14"w x 3"d x 11"h	None
OPOI	9301	1	Stand, Mayo, Removable Tray,Adj.Ht.	floor	16x20x40	None
OPOI	9314	1	Table/Chair, Examination, Powered, Adjustable Lift Back, Stirrups: Per Owner Request	floor	full ext 75" x 24.5"w x adj ht	E: 115V
OPOI	9854	1	Sundry Jar Set of 5, for Exam Room Supplys (tongue depressors, alcohol wipes, cotton balls, etc…)	countertop	each unit approx 4" diameter x 7"h	None

ARCH ROOM NO **2048**

ROOM TITLE **EXAM, CLINICAL**

GROUP	EQNO	QTY	DESCRIPTION	LOCATION	SIZE-STD	UTILITIES
OPVI	1005b	1	Chair, Side, No Arms, Vinyl Upholstery; SOFT BLACK CASTERS FOR HARD FLOORING	floor	23"W 18.3125"D 32.625"H	None
CPCI	1054	1	Clock System, Synchronized; Analogue, With Second Hand; Sized Appropriate for Space; Control System	wall	VARIES	E; Low Voltage

OPVI	1335a	1	Stool, No Backrest, Foot ring, Soft Casters For Hard Flooring, Pneumatic Adj. Ht.	floor	Typical 18"w x 16"d or 16" diameter	None
OPVI	1404b	1	Table, Folding, for SAM model; specifications per owner	floor	60"l x 18"d x 29"h	None
OPVI	3041	1	Wastebasket, Step-On,Plastic,Rectangular, Red/Bio Hazard 8 gallon	floor	16.26"W x15.75"D x17.25"H	None
OPVI	3062b	1	Wastebasket, Office,Tall, 23 gallon, Open Top; COLOR: GRAY	floor	11"w x 22"d x 30"h	None
OPOI	3088a	1	Container, Sharps: Countertop; 1 GALLON; Drop In Top: VERIFY OWNER SOURCE	Countertop	7"D x10.25"W x6"H	None
OPOI	3089	1	Dispenser, Quad Glove Box: finish options to be selected; Vertical or Horizontal Mount	wall mount	24"w x 12"h x 6"d	None
OPOI	3100	1	Dispenser, Paper Towel: TYPE TBD ? BY OWNER-CURRENT JANITORIAL SERVICE	wall mount	TBD	None
OPOI	3102	1	Dispenser, Soap: SPECIFICATIONS & Type TBD BY OWNER	wall mount	7"w x4"d x11.5"h	None
OPOI	3106	1	Mirror, Small, Option, To Be Located in the upper cabinet of exam rooms	inside cabinet	TBD	None
CPCI	3115	1	Robe Hook, Double	wall	6x6x3	None
OPOI	3903	1	Computer,Personal & Monitor, Wireless Keyboard & Mouse for Desk Use: TO BE SPECIFIED BY OWNER	desktop	24"w x 18"d x 22"h	E 115V; Data
OPVI	3904a	1	Workstation; Wall Mounted for Computer Monitor & Keyboard+PC Holder; Folding Design;REQUIRES	wall mount	25" W x 10" D x Up to 34"h	E 115V; Data-Com
OPOI	8302	1	Tray, Plastic, Used for transferring items to & from Mayo Stand	stored	18"w x 12"l x 1"h	None
OPOI	8303	1	Hammer, Neuro Exam; Buck 7 3/4	stored	N/A	None
OPOI	8304	1	Hammer, Neuro Exam; Tomohawk	stored	N/A	None
OPOI	8305	1	Hammer, Neuro Exam; Queens Head Babinski	stored	N/A	None
OPOI	8306	1	Tuning Fork for Neuro Exam; 128	stored	N/A	None
OPOI	8307	1	Tuning Fork for Neuro Exam; 256	stored	N/A	None

OPOI	8308	1	Tuning Fork for Neuro Exam; 512	stored	N/A	None
OPOI	8309	1	Supplies, Consumable Exam Room; All paper products, gloves, gauze, cotton balls, speculums, etc.…	stored	Varies	None
OPOI	8573	1	Light Source for Vaginal Speculum with Transformer	countertop	n/a	E 120V for charger or Battery Operated
OPOI	8710	1	Manikin, Student Auscultation, Works through Laptop; OWNER TO SPECIFY MODEL	table top	24"w x 30"l	None
OPOI	8776	1	Integrated DX Sys; Otoscope-Ophthalmoscope-BP-w/Therm; Specula Disp:BACKING REQ;WA-	board mount	30"w x 16"h x 6"d	E 115V
CPCI	8850	1	Rack, Chart, To Be Located Outside of Exam Rooms	wall	Typical 14"w x 3"d x 11"h	None
OPOI	9301	1	Stand, Mayo, Removable Tray,Adj.Ht.	floor	16x20x40	None
OPOI	9314	1	Table/Chair, Examination, Powered, Adjustable Lift Back, Stirrups: Per Owner Request	floor	full ext 75" x 24.5"w x adj ht	E: 115V
OPOI	9854	1	Sundry Jar Set of 5, for Exam Room Supplys (tongue depressors, alcohol wipes, cotton balls, etc…)	countertop	each unit approx 4" diameter x 7"h	None

ARCH ROOM NO **2049**

ROOM TITLE **EXAM, CLINICAL**

GROUP	EQNO	QTY	DESCRIPTION	LOCATION	SIZE-STD	UTILITIES
OPVI	1005b	1	Chair, Side, No Arms, Vinyl Upholstery; SOFT BLACK CASTERS FOR HARD FLOORING	floor	23"W 18.3125"D 32.625"H	None
CPCI	1054	1	Clock System, Synchronized; Analogue, With Second Hand; Sized Appropriate for Space; Control System	wall	VARIES	E; Low Voltage
OPVI	1335a	1	Stool, No Backrest, Foot ring, Soft Casters For Hard Flooring, Pneumatic Adj. Ht.	floor	Typical 18"w x 16"d or 16" diameter	None
OPVI	1404b	1	Table, Folding, for SAM model; specifications per owner	floor	60"l x 18"d x 29"h	None
OPVI	3041	1	Wastebasket, Step-On,Plastic,Rectangular, Red/Bio Hazard 8 gallon	floor	16.26"W x15.75"D x17.25"H	None
OPVI	3062b	1	Wastebasket, Office,Tall, 23 gallon, Open Top; COLOR: GRAY	floor	11"w x 22"d x 30"h	None
OPOI	3088a	1	Container, Sharps: Countertop; 1 GALLON; Drop In Top: VERIFY OWNER SOURCE	Countertop	7"D x10.25"W x6"H	None
OPOI	3089	1	Dispenser, Quad Glove Box: finish options to be selected; Vertical or Horizontal Mount	wall mount	24"w x 12"h x 6"d	None

OPOI	3100	1	Dispenser, Paper Towel: TYPE TBD ? BY OWNER-CURRENT JANITORIAL SERVICE	wall mount	TBD	None
OPOI	3102	1	Dispenser, Soap: SPECIFICATIONS & Type TBD BY OWNER	wall mount	7"w x4"d x11.5"h	None
OPOI	3106	1	Mirror, Small, Option, To Be Located in the upper cabinet of exam rooms	inside cabinet	TBD	None
CPCI	3115	1	Robe Hook, Double	wall	6x6x3	None
OPOI	3903	1	Computer,Personal & Monitor, Wireless Keyboard & Mouse for Desk Use: TO BE SPECIFIED BY OWNER	desktop	24"w x 18"d x 22"h	E 115V; Data
OPVI	3904a	1	Workstation; Wall Mounted for Computer Monitor & Keyboard+PC Holder; Folding Design;REQUIRES	wall mount	25" W x 10" D x Up to 34"h	E 115V; Data-Com
OPOI	8302	1	Tray, Plastic, Used for transferring items to & from Mayo Stand	stored	18"w x 12"l x 1"h	None
OPOI	8303	1	Hammer, Neuro Exam; Buck 7 3/4	stored	N/A	None
OPOI	8304	1	Hammer, Neuro Exam; Tomohawk	stored	N/A	None
OPOI	8305	1	Hammer, Neuro Exam; Queens Head Babinski	stored	N/A	None
OPOI	8306	1	Tuning Fork for Neuro Exam; 128	stored	N/A	None
OPOI	8307	1	Tuning Fork for Neuro Exam; 256	stored	N/A	None
OPOI	8308	1	Tuning Fork for Neuro Exam; 512	stored	N/A	None
OPOI	8309	1	Supplies, Consumable Exam Room; All paper products, gloves, gauze, cotton balls, speculums, etc.…	stored	Varies	None
OPOI	8570d	1	Light,Examination; On mobile Stand; LED; Flexible Light Pipe;	floor	21" diameter	E 115V
OPOI	8710	1	Manikin, Student Auscultation, Works through Laptop; OWNER TO SPECIFY MODEL	table top	24"w x 30"l	None
OPOI	8776	1	Integrated DX Sys; Otoscope-Ophthalmoscope-BP-w/Therm; Specula Disp:BACKING REQ;WA-	board mount	30"w x 16"h x 6"d	E 115V
CPCI	8850	1	Rack, Chart, To Be Located Outside of Exam Rooms	wall	Typical 14"w x 3"d x 11"h	None

OPOI	9301	1	Stand, Mayo, Removable Tray,Adj.Ht.	floor	16x20x40	None
OPOI	9314	1	Table/Chair, Examination, Powered, Adjustable Lift Back, Stirrups: Per Owner Request	floor	full ext 75" x 24.5"w x adj ht	E: 115V
OPOI	9854	1	Sundry Jar Set of 5, for Exam Room Supplys (tongue depressors, alcohol wipes, cotton balls, etc…)	countertop	each unit approx 4" diameter x 7"h	None

ARCH ROOM NO **2050**

ROOM TITLE **EXAM, CLINICAL**

GROUP	EQNO	QTY	DESCRIPTION	LOCATION	SIZE-STD	UTILITIES
OPVI	1005b	1	Chair, Side, No Arms, Vinyl Upholstery; SOFT BLACK CASTERS FOR HARD FLOORING	floor	23"W 18.3125"D 32.625"H	None
CPCI	1054	1	Clock System, Synchronized; Analogue, With Second Hand; Sized Appropriate for Space; Control System	wall	VARIES	E; Low Voltage
OPVI	1335a	1	Stool, No Backrest, Foot ring, Soft Casters For Hard Flooring, Pneumatic Adj. Ht.	floor	Typical 18"w x 16"d or 16" diameter	None
OPVI	1404b	1	Table, Folding, for SAM model; specifications per owner	floor	60"l x 18"d x 29"h	None
OPVI	3041	1	Wastebasket, Step-On,Plastic,Rectangular, Red/Bio Hazard 8 gallon	floor	16.26"W x15.75"D x17.25"H	None
OPVI	3062b	1	Wastebasket, Office,Tall, 23 gallon, Open Top; COLOR: GRAY	floor	11"w x 22"d x 30"h	None
OPOI	3088a	1	Container, Sharps: Countertop; 1 GALLON; Drop In Top: VERIFY OWNER SOURCE	Countertop	7"D x10.25"W x6"H	None
OPOI	3089	1	Dispenser, Quad Glove Box: finish options to be selected; Vertical or Horizontal Mount	wall mount	24"w x 12"h x 6"d	None
OPOI	3100	1	Dispenser, Paper Towel: TYPE TBD ? BY OWNER-CURRENT JANITORIAL SERVICE	wall mount	TBD	None
OPOI	3102	1	Dispenser, Soap: SPECIFICATIONS & Type TBD BY OWNER	wall mount	7"w x4"d x11.5"h	None
OPOI	3106	1	Mirror, Small, Option, To Be Located in the upper cabinet of exam rooms	inside cabinet	TBD	None
CPCI	3115	1	Robe Hook, Double	wall	6x6x3	None
OPOI	3903	1	Computer,Personal & Monitor, Wireless Keyboard & Mouse for Desk Use: TO BE SPECIFIED BY OWNER	desktop	24"w x 18"d x 22"h	E 115V; Data
OPVI	3904a	1	Workstation; Wall Mounted for Computer Monitor & Keyboard+PC Holder; Folding Design;REQUIRES	wall mount	25" W x 10" D x Up to 34"h	E 115V; Data-Com

OPOI	8302	1	Tray, Plastic, Used for transferring items to & from Mayo Stand	stored	18"w x 12"l x 1"h	None
OPOI	8303	1	Hammer, Neuro Exam; Buck 7 3/4	stored	N/A	None
OPOI	8304	1	Hammer, Neuro Exam; Tomohawk	stored	N/A	None
OPOI	8305	1	Hammer, Neuro Exam; Queens Head Babinski	stored	N/A	None
OPOI	8306	1	Tuning Fork for Neuro Exam; 128	stored	N/A	None
OPOI	8307	1	Tuning Fork for Neuro Exam; 256	stored	N/A	None
OPOI	8308	1	Tuning Fork for Neuro Exam; 512	stored	N/A	None
OPOI	8309	1	Supplies, Consumable Exam Room; All paper products, gloves, gauze, cotton balls, speculums, etc.…	stored	Varies	None
OPOI	8573	1	Light Source for Vaginal Speculum with Transformer	countertop	n/a	E 120V for charger or Battery Operated
OPOI	8710	1	Manikin, Student Auscultation, Works through Laptop; OWNER TO SPECIFY MODEL	table top	24"w x 30"l	None
OPOI	8776	1	Integrated DX Sys; Otoscope-Ophthalmoscope-BP-w/Therm; Specula Disp:BACKING REQ;WA-	board mount	30"w x 16"h x 6"d	E 115V
CPCI	8850	1	Rack, Chart, To Be Located Outside of Exam Rooms	wall	Typical 14"w x 3"d x 11"h	None
OPOI	9301	1	Stand, Mayo, Removable Tray,Adj.Ht.	floor	16x20x40	None
OPOI	9314	1	Table/Chair, Examination, Powered, Adjustable Lift Back, Stirrups: Per Owner Request	floor	full ext 75" x 24.5"w x adj ht	E: 115V
OPOI	9854	1	Sundry Jar Set of 5, for Exam Room Supplys (tongue depressors, alcohol wipes, cotton balls, etc…)	countertop	each unit approx 4" diameter x 7"h	None

ARCH ROOM NO **2051**

ROOM TITLE **EXAM, CLINICAL**

GROUP	EQNO	QTY	DESCRIPTION	LOCATION	SIZE-STD	UTILITIES
OPVI	1005b	1	Chair, Side, No Arms, Vinyl Upholstery; SOFT BLACK CASTERS FOR HARD FLOORING	floor	23"W 18.3125"D 32.625"H	None
CPCI	1054	1	Clock System, Synchronized; Analogue, With Second Hand; Sized Appropriate for Space; Control System	wall	VARIES	E; Low Voltage

OPVI	1335a	1	Stool, No Backrest, Foot ring, Soft Casters For Hard Flooring, Pneumatic Adj. Ht.	floor	Typical 18"w x 16"d or 16" diameter	None
OPVI	1404b	1	Table, Folding, for SAM model; specifications per owner	floor	60"l x 18"d x 29"h	None
OPVI	3041	1	Wastebasket, Step-On,Plastic,Rectangular, Red/Bio Hazard 8 gallon	floor	16.26"W x15.75"D x17.25"H	None
OPVI	3062b	1	Wastebasket, Office,Tall, 23 gallon, Open Top; COLOR: GRAY	floor	11"w x 22"d x 30"h	None
OPOI	3088a	1	Container, Sharps: Countertop; 1 GALLON; Drop In Top: VERIFY OWNER SOURCE	Countertop	7"D x10.25"W x6"H	None
OPOI	3089	1	Dispenser, Quad Glove Box: finish options to be selected; Vertical or Horizontal Mount	wall mount	24"w x 12"h x 6"d	None
OPOI	3100	1	Dispenser, Paper Towel: TYPE TBD ? BY OWNER-CURRENT JANITORIAL SERVICE	wall mount	TBD	None
OPOI	3102	1	Dispenser, Soap: SPECIFICATIONS & Type TBD BY OWNER	wall mount	7"w x4"d x11.5"h	None
OPOI	3106	1	Mirror, Small, Option, To Be Located in the upper cabinet of exam rooms	inside cabinet	TBD	None
CPCI	3115	1	Robe Hook, Double	wall	6x6x3	None
OPOI	3903	1	Computer,Personal & Monitor, Wireless Keyboard & Mouse for Desk Use: TO BE SPECIFIED BY OWNER	desktop	24"w x 18"d x 22"h	E 115V; Data
OPVI	3904a	1	Workstation; Wall Mounted for Computer Monitor & Keyboard+PC Holder; Folding Design;REQUIRES	wall mount	25" W x 10" D x Up to 34"h	E 115V; Data-Com
OPOI	8302	1	Tray, Plastic, Used for transferring items to & from Mayo Stand	stored	18"w x 12"l x 1"h	None
OPOI	8303	1	Hammer, Neuro Exam; Buck 7 3/4	stored	N/A	None
OPOI	8304	1	Hammer, Neuro Exam; Tomohawk	stored	N/A	None
OPOI	8305	1	Hammer, Neuro Exam; Queens Head Babinski	stored	N/A	None
OPOI	8306	1	Tuning Fork for Neuro Exam; 128	stored	N/A	None
OPOI	8307	1	Tuning Fork for Neuro Exam; 256	stored	N/A	None

OPOI	8308	1	Tuning Fork for Neuro Exam; 512	stored	N/A	None
OPOI	8309	1	Supplies, Consumable Exam Room; All paper products, gloves, gauze, cotton balls, speculums, etc.…	stored	Varies	None
OPOI	8570d	1	Light,Examination; On mobile Stand; LED; Flexible Light Pipe;	floor	21" diameter	E 115V
OPOI	8710	1	Manikin, Student Auscultation, Works through Laptop; OWNER TO SPECIFY MODEL	table top	24"w x 30"l	None
OPOI	8776	1	Integrated DX Sys; Otoscope-Ophthalmoscope-BP-w/Therm; Specula Disp:BACKING REQ;WA-	board mount	30"w x 16"h x 6"d	E 115V
CPCI	8850	1	Rack, Chart, To Be Located Outside of Exam Rooms	wall	Typical 14"w x 3"d x 11"h	None
OPOI	9301	1	Stand, Mayo, Removable Tray,Adj.Ht.	floor	16x20x40	None
OPOI	9314	1	Table/Chair, Examination, Powered, Adjustable Lift Back, Stirrups: Per Owner Request	floor	full ext 75" x 24.5"w x adj ht	E: 115V
OPOI	9854	1	Sundry Jar Set of 5, for Exam Room Supplys (tongue depressors, alcohol wipes, cotton balls, etc…)	countertop	each unit approx 4" diameter x 7"h	None

ARCH ROOM NO **2052**

ROOM TITLE **CORRIDOR CENTRAL; CE WITH 10 WORKSTATIONS**

GROUP	EQNO	QTY	DESCRIPTION	LOCATION	SIZE-STD	UTILITIES
OPVI	0150a	11	Chair, Rotary,Std Mesh Back,5-Legged, HARD CASTERS-SOFT Flooring ,Ergonomic,Adj Arms, Black	floor	28.25"W 25.25"D 42.25”-47”H	None
CPCI	1054	2	Clock System, Synchronized; Analogue, With Second Hand; Sized Appropriate for Space; Control System	wall	VARIES	E; Low Voltage
OPVI	1413	1	Table, Rectangular, On Casters, Flip Top	floor	36"l x24"d x36"h	None
OPVI	1413d	1	Table, Work, Rectangular, Standing Height; With Locking Casters:	floor	48"l x18"d x36"h	None
CPCI	2518	1	Board, Marker, Magnetic Cleanable Surface,w/Tray, 48" x 48" x 1"d	wall	48"w x48"h x1"d	None
OPOI	3903	10	Computer,Personal & Monitor, Wireless Keyboard & Mouse for Desk Use: TO BE SPECIFIED BY OWNER	desktop	24"w x 18"d x 22"h	E 115V; Data

ARCH ROOM NO **2053**

ROOM TITLE **CONTROL ROOM, CLINICAL EXAM**

GROUP	EQNO	QTY	DESCRIPTION	LOCATION	SIZE-STD	UTILITIES
OPVI	0150b	2	Chair, Rotary,Std Mesh Back,5-Legged, SOFT CASTERS-HARD FLOORING , Ergonomic,Adj Arms,	floor	28.25"W 25.25"D 42.25”-47”H	None

CPCI	1054	1	Clock System, Synchronized; Analogue, With Second Hand; Sized Appropriate for Space; Control System	wall	VARIES	E; Low Voltage
OPOI	1079f	1	Desk, Single Pedestal, Pencil/Storage/File Drawer (FUTURE PURCHASE)	floor	72X78"l x "d x 30"h	None
OPOI	2941	2	Telephone, Standard Desk: TO BE SPECIFIED BY OWNER	desktop	10"D X 8"W X 4"H	Data-Com
OPOI	2941f	1	Telephone, Standard: FUTURE PLACEMENT	desktop	10"D X 8"W X 4"H	Data-Com
OPVI	3039a	1	Wastebasket, Rectangular, plastic, water/fire resistant,28qt	floor	14lx11wx16h	None
CPCI	3115	1	Robe Hook, Double	wall	6x6x3	None
OPOI	3907s	2	Computer With Dual Monitor, Wireless Keyboard & Mouse; TO MEET EMS STANDARDS & BE SPECIFIED BY	desk top	TBD	E 115V; Data-Com
OPOI	3907z	1	Computer With Dual Monitor, Wireless Keyboard & Mouse; FUTURE PURCHASE:TO BE SPECIFIED BY	desk top	TBD	E 115V; Data-Com
OPOI	3913z	1	Printer, Laser, Individual; FUTURE PURCHASE; TO BE SPECIFIED BY OWNER	countertop	16.3"w x16.6"d x17.7"h	E 115V; Data Comm
OPOI	4136	2	Television-Monitor, High Resolution Flat Panel, 55", WaMount; REQUIRES BACKING: SPEC BY OWNER	wall or ceiling	49.2"w x 29"h x 3.1"d	E 115V; Cabling; Data

ARCH ROOM NO **2055**

ROOM TITLE **DEBRIEF, CLINICAL EXAM**

GROUP	EQNO	QTY	DESCRIPTION	LOCATION	SIZE-STD	UTILITIES
OPVI	0212a	10	Chair, Conference Type; MOLDED PLASTIC BACK & SEAT On Hard Casters For Carpet	floor	25.875"W 21.3125"D 32.625"H	None
OPVI	0681	1	Cabinet, Credenza; Suitable for display of teaching materials; w/locking doors: Laminate Asian Night	floor	72"W x 24"D x 36"H	None
OPVI	1005a	2	Chair, Side,MOLDED PLASTIC BACK & SEAT: HARD BLACK CASTERS FOR CARPET	floor	23"W 18.3125"D 32.625"H	None
CPCI	1054	1	Clock System, Synchronized; Analogue, With Second Hand; Sized Appropriate for Space; Control System	wall	VARIES	E; Low Voltage
OPVI	1402d	1	Table, Conference, POWER for table; 2 Data for Phones	floor	108"L X 42"D X 30"H	None
CPCI	2523	1	Board, Marker; Large for Stage Area/Conference Spaces; Wall Mounted	wall	8'w x 4'h x2"d	None
OPOI	2945	0	Telephone, Conference: TO BE SPECIFIED BY OWNER	desktop	14X13X3	E 115V; Data-Com

OPVI	3043	1	Wastebasket, Stainless Steel, Half Moon Shape 12 gal; Open Top; Perforated Panel	floor	18"w x32"hx12"D	None
OPOI	3903	1	Computer,Personal & Monitor, Wireless Keyboard & Mouse for Desk Use: TO BE SPECIFIED BY OWNER	desktop	24"w x 18"d x 22"h	E 115V; Data
OPOI	4102	1	Cabinet, Audio/Visual, Portable, For 1 PC & MONITOR; SPECS TBD BY I.T. DEPT/3RD PARTY VENDOR	floor	TBD By Design	E 115V Quad; Data/?Com
OPOI	4109	1	Microphone, Ceiling Hung; Poly Com or Comparable, for Meeting Rooms: SPECIFIED BY OWNER I.T. DEPT	ceiling	TBD BY I.T.	TBD
OPOI	4110	1	Cam, Web or Poly Com Cam for Meeting Rooms: TO SPECIFIED BY OWNER I.T. DEPT	wall mount	TBD BY I.T.	TBD
OPOI	4130	1	Television, Flat Panel Monitor, 82" screen; Wall Mount REQUIRES BACKING; SPECS BY OWNER I.T.	wall mount	TYPICAL:72"w x 2.4"d x 45.1"h	E 115V; Data

ARCH ROOM NO **2056**

ROOM TITLE **PREBRIEF, CLINICAL EXAM**

GROUP	EQNO	QTY	DESCRIPTION	LOCATION	SIZE-STD	UTILITIES
OPVI	0212a	10	Chair, Conference Type; MOLDED PLASTIC BACK & SEAT On Hard Casters For Carpet	floor	25.875"W 21.3125"D 32.625"H	None
OPVI	0681	1	Cabinet, Credenza; Suitable for display of teaching materials; w/locking doors: Laminate Asian Night	floor	72"W x 24"D x 36"H	None
OPVI	1005a	2	Chair, Side,MOLDED PLASTIC BACK & SEAT: HARD BLACK CASTERS FOR CARPET	floor	23"W 18.3125"D 32.625"H	None
CPCI	1054	1	Clock System, Synchronized; Analogue, With Second Hand; Sized Appropriate for Space; Control System	wall	VARIES	E; Low Voltage
OPVI	1402d	1	Table, Conference, POWER for table; 2 Data for Phones	floor	108"L X 42"D X 30"H	None
CPCI	2523	1	Board, Marker; Large for Stage Area/Conference Spaces; Wall Mounted	wall	8'w x 4'h x2"d	None
OPOI	2945	1	Telephone, Conference: TO BE SPECIFIED BY OWNER	desktop	14X13X3	E 115V; Data-Com
OPVI	3043	2	Wastebasket, Stainless Steel, Half Moon Shape 12 gal; Open Top; Perforated Panel	floor	18"w x32"hx12"D	None
OPOI	3903	1	Computer,Personal & Monitor, Wireless Keyboard & Mouse for Desk Use: TO BE SPECIFIED BY OWNER	desktop	24"w x 18"d x 22"h	E 115V; Data
OPOI	4102	1	Cabinet, Audio/Visual, Portable, For 1 PC & MONITOR; SPECS TBD BY I.T. DEPT/3RD PARTY VENDOR	floor	TBD By Design	E 115V Quad; Data/?Com
OPOI	4109	1	Microphone, Ceiling Hung; Poly Com or Comparable, for Meeting Rooms: SPECIFIED BY OWNER I.T. DEPT	ceiling	TBD BY I.T.	TBD

OPOI	4110	1	Cam, Web or Poly Com Cam for Meeting Rooms: TO SPECIFIED BY OWNER I.T. DEPT	wall mount	TBD BY I.T.	TBD
OPOI	4130	1	Television, Flat Panel Monitor, 82" screen; Wall Mount REQUIRES BACKING; SPECS BY OWNER I.T.	wall mount	TYPICAL:72"w x 2.4"d x 45.1"h	E 115V; Data

ARCH ROOM NO **2057**

ROOM TITLE **CORRIDOR 1; CE PERIMETER WITH 4 WORKSTATIONS**

GROUP	EQNO	QTY	DESCRIPTION	LOCATION	SIZE-STD	UTILITIES
OPVI	0150a	1	Chair, Rotary,Std Mesh Back,5-Legged, HARD CASTERS-SOFT Flooring ,Ergonomic,Adj Arms, Black	floor	28.25"W 25.25"D 42.25"-47"H	None
OPVI	0181	3	Chair, Rotary,Std.Back, Hard BLACK Casters for Carpet Floors, NO Arms, Ext Ht For Stdg Work Surface	floor	27.5"W 27.5"D 37.5-47 ¾"H	None
CPCI	1054	1	Clock System, Synchronized; Analogue, With Second Hand; Sized Appropriate for Space; Control System	wall	VARIES	E; Low Voltage
CPCI	2516	4	Board, Marker, Magnetic Cleanable Surface,w/Tray, 24"w x 24"h x 1"d	wall	24"w x 24"h x 1"d	None
OPVI	3043	1	Wastebasket, Stainless Steel, Half Moon Shape 12 gal; Open Top; Perforated Panel	floor	18"w x32"hx12"D	None
CPCI	3115	4	Robe Hook, Double	wall	6x6x3	None
OPOI	3903	4	Computer,Personal & Monitor, Wireless Keyboard & Mouse for Desk Use: TO BE SPECIFIED BY OWNER	desktop	24"w x 18"d x 22"h	E 115V; Data

ARCH ROOM NO **2058**

ROOM TITLE **EXAM, CLINICAL**

GROUP	EQNO	QTY	DESCRIPTION	LOCATION	SIZE-STD	UTILITIES
OPVI	1005b	1	Chair, Side, No Arms, Vinyl Upholstery; SOFT BLACK CASTERS FOR HARD FLOORING	floor	23"W 18.3125"D 32.625"H	None
CPCI	1054	1	Clock System, Synchronized; Analogue, With Second Hand; Sized Appropriate for Space; Control System	wall	VARIES	E; Low Voltage
OPVI	1335a	1	Stool, No Backrest, Foot ring, Soft Casters For Hard Flooring, Pneumatic Adj. Ht.	floor	Typical 18"w x 16"d or 16" diameter	None
OPVI	1404b	1	Table, Folding, for SAM model; specifications per owner	floor	60"l x 18"d x 29"h	None
OPVI	3041	1	Wastebasket, Step-On,Plastic,Rectangular, Red/Bio Hazard 8 gallon	floor	16.26"W x15.75"D x17.25"H	None
OPVI	3062b	1	Wastebasket, Office,Tall, 23 gallon, Open Top; COLOR: GRAY	floor	11"w x 22"d x 30"h	None
OPOI	3088a	1	Container, Sharps: Countertop; 1 GALLON; Drop In Top: VERIFY OWNER SOURCE	Countertop	7"D x10.25"W x6"H	None

OPOI	3089	1	Dispenser, Quad Glove Box: finish options to be selected; Vertical or Horizontal Mount	wall mount	24"w x 12"h x 6"d	None
OPOI	3100	1	Dispenser, Paper Towel: TYPE TBD ? BY OWNER-CURRENT JANITORIAL SERVICE	wall mount	TBD	None
OPOI	3102	1	Dispenser, Soap: SPECIFICATIONS & Type TBD BY OWNER	wall mount	7"w x4"d x11.5"h	None
OPOI	3106	1	Mirror, Small, Option, To Be Located in the upper cabinet of exam rooms	inside cabinet	TBD	None
CPCI	3115	1	Robe Hook, Double	wall	6x6x3	None
OPOI	3903	1	Computer,Personal & Monitor, Wireless Keyboard & Mouse for Desk Use: TO BE SPECIFIED BY OWNER	desktop	24"w x 18"d x 22"h	E 115V; Data
OPVI	3904a	1	Workstation; Wall Mounted for Computer Monitor & Keyboard+PC Holder; Folding Design;REQUIRES	wall mount	25" W x 10" D x Up to 34"h	E 115V; Data-Com
OPOI	8302	1	Tray, Plastic, Used for transferring items to & from Mayo Stand	stored	18"w x 12"l x 1"h	None
OPOI	8303	1	Hammer, Neuro Exam; Buck 7 3/4	stored	N/A	None
OPOI	8304	1	Hammer, Neuro Exam; Tomohawk	stored	N/A	None
OPOI	8305	1	Hammer, Neuro Exam; Queens Head Babinski	stored	N/A	None
OPOI	8306	1	Tuning Fork for Neuro Exam; 128	stored	N/A	None
OPOI	8307	1	Tuning Fork for Neuro Exam; 256	stored	N/A	None
OPOI	8308	1	Tuning Fork for Neuro Exam; 512	stored	N/A	None
OPOI	8309	1	Supplies, Consumable Exam Room; All paper products, gloves, gauze, cotton balls, speculums, etc.…	stored	Varies	None
OPOI	8573	1	Light Source for Vaginal Speculum with Transformer	countertop	n/a	E 120V for charger or Battery Operated
OPOI	8710	1	Manikin, Student Auscultation, Works through Laptop; OWNER TO SPECIFY MODEL	table top	24"w x 30"l	None
OPOI	8776	1	Integrated DX Sys; Otoscope-Ophthalmoscope-BP-w/Therm; Specula Disp:BACKING REQ;WA-	board mount	30"w x 16"h x 6"d	E 115V

CPCI	8850	1	Rack, Chart, To Be Located Outside of Exam Rooms	wall	Typical 14"w x 3"d x 11"h	None
OPOI	9301	1	Stand, Mayo, Removable Tray,Adj.Ht.	floor	16x20x40	None
OPOI	9314	1	Table/Chair, Examination, Powered, Adjustable Lift Back, Stirrups: Per Owner Request	floor	full ext 75" x 24.5"w x adj ht	E: 115V
OPOI	9854	1	Sundry Jar Set of 5, for Exam Room Supplys (tongue depressors, alcohol wipes, cotton balls, etc…)	countertop	each unit approx 4" diameter x 7"h	None

ARCH ROOM NO **2059**

ROOM TITLE **EXAM, CLINICAL**

GROUP	EQNO	QTY	DESCRIPTION	LOCATION	SIZE-STD	UTILITIES
OPVI	1005b	1	Chair, Side, No Arms, Vinyl Upholstery; SOFT BLACK CASTERS FOR HARD FLOORING	floor	23"W 18.3125"D 32.625"H	None
CPCI	1054	1	Clock System, Synchronized; Analogue, With Second Hand; Sized Appropriate for Space; Control System	wall	VARIES	E; Low Voltage
OPVI	1335a	1	Stool, No Backrest, Foot ring, Soft Casters For Hard Flooring, Pneumatic Adj. Ht.	floor	Typical 18"w x 16"d or 16" diameter	None
OPVI	1404b	1	Table, Folding, for SAM model; specifications per owner	floor	60"l x 18"d x 29"h	None
OPVI	3041	1	Wastebasket, Step-On,Plastic,Rectangular, Red/Bio Hazard 8 gallon	floor	16.26"W x15.75"D x17.25"H	None
OPVI	3062b	1	Wastebasket, Office,Tall, 23 gallon, Open Top; COLOR: GRAY	floor	11"w x 22"d x 30"h	None
OPOI	3088a	1	Container, Sharps: Countertop; 1 GALLON; Drop In Top: VERIFY OWNER SOURCE	Countertop	7"D x10.25"W x6"H	None
OPOI	3089	1	Dispenser, Quad Glove Box: finish options to be selected; Vertical or Horizontal Mount	wall mount	24"w x 12"h x 6"d	None
OPOI	3100	1	Dispenser, Paper Towel: TYPE TBD ? BY OWNER-CURRENT JANITORIAL SERVICE	wall mount	TBD	None
OPOI	3102	1	Dispenser, Soap: SPECIFICATIONS & Type TBD BY OWNER	wall mount	7"w x4"d x11.5"h	None
OPOI	3106	1	Mirror, Small, Option, To Be Located in the upper cabinet of exam rooms	inside cabinet	TBD	None
CPCI	3115	1	Robe Hook, Double	wall	6x6x3	None
OPOI	3903	1	Computer,Personal & Monitor, Wireless Keyboard & Mouse for Desk Use: TO BE SPECIFIED BY OWNER	desktop	24"w x 18"d x 22"h	E 115V; Data

OPVI	3904a	1	Workstation; Wall Mounted for Computer Monitor & Keyboard+PC Holder; Folding Design;REQUIRES	wall mount	25" W x 10" D x Up to 34"h	E 115V; Data-Com
OPOI	8302	1	Tray, Plastic, Used for transferring items to & from Mayo Stand	stored	18"w x 12"l x 1"h	None
OPOI	8303	1	Hammer, Neuro Exam; Buck 7 3/4	stored	N/A	None
OPOI	8304	1	Hammer, Neuro Exam; Tomohawk	stored	N/A	None
OPOI	8305	1	Hammer, Neuro Exam; Queens Head Babinski	stored	N/A	None
OPOI	8306	1	Tuning Fork for Neuro Exam; 128	stored	N/A	None
OPOI	8307	1	Tuning Fork for Neuro Exam; 256	stored	N/A	None
OPOI	8308	1	Tuning Fork for Neuro Exam; 512	stored	N/A	None
OPOI	8309	1	Supplies, Consumable Exam Room; All paper products, gloves, gauze, cotton balls, speculums, etc.…	stored	Varies	None
OPOI	8570d	1	Light,Examination; On mobile Stand; LED; Flexible Light Pipe;	floor	21" diameter	E 115V
OPOI	8710	1	Manikin, Student Auscultation, Works through Laptop; OWNER TO SPECIFY MODEL	table top	24"w x 30"l	None
OPOI	8776	1	Integrated DX Sys; Otoscope-Ophthalmoscope-BP-w/Therm; Specula Disp:BACKING REQ;WA-	board mount	30"w x 16"h x 6"d	E 115V
CPCI	8850	1	Rack, Chart, To Be Located Outside of Exam Rooms	wall	Typical 14"w x 3"d x 11"h	None
OPOI	9301	1	Stand, Mayo, Removable Tray,Adj.Ht.	floor	16x20x40	None
OPOI	9314	1	Table/Chair, Examination, Powered, Adjustable Lift Back, Stirrups: Per Owner Request	floor	full ext 75" x 24.5"w x adj ht	E: 115V
OPOI	9854	1	Sundry Jar Set of 5, for Exam Room Supplys (tongue depressors, alcohol wipes, cotton balls, etc…)	countertop	each unit approx 4" diameter x 7"h	None

ARCH ROOM NO **2060**

ROOM TITLE **EXAM, CLINICAL**

GROUP	EQNO	QTY	DESCRIPTION	LOCATION	SIZE-STD	UTILITIES
OPVI	1005b	1	Chair, Side, No Arms, Vinyl Upholstery; SOFT BLACK CASTERS FOR HARD FLOORING	floor	23"W 18.3125"D 32.625"H	None

CPCI	1054	1	Clock System, Synchronized; Analogue, With Second Hand; Sized Appropriate for Space; Control System	wall	VARIES	E; Low Voltage
OPVI	1335a	1	Stool, No Backrest, Foot ring, Soft Casters For Hard Flooring, Pneumatic Adj. Ht.	floor	Typical 18"w x 16"d or 16" diameter	None
OPVI	1404b	1	Table, Folding, for SAM model; specifications per owner	floor	60"l x 18"d x 29"h	None
OPVI	3041	1	Wastebasket, Step-On,Plastic,Rectangular, Red/Bio Hazard 8 gallon	floor	16.26"W x15.75"D x17.25"H	None
OPVI	3062b	1	Wastebasket, Office,Tall, 23 gallon, Open Top; COLOR: GRAY	floor	11"w x 22"d x 30"h	None
OPOI	3088a	1	Container, Sharps: Countertop; 1 GALLON; Drop In Top: VERIFY OWNER SOURCE	Countertop	7"D x10.25"W x6"H	None
OPOI	3089	1	Dispenser, Quad Glove Box: finish options to be selected; Vertical or Horizontal Mount	wall mount	24"w x 12"h x 6"d	None
OPOI	3100	1	Dispenser, Paper Towel: TYPE TBD ? BY OWNER-CURRENT JANITORIAL SERVICE	wall mount	TBD	None
OPOI	3102	1	Dispenser, Soap: SPECIFICATIONS & Type TBD BY OWNER	wall mount	7"w x4"d x11.5"h	None
OPOI	3106	1	Mirror, Small, Option, To Be Located in the upper cabinet of exam rooms	inside cabinet	TBD	None
CPCI	3115	1	Robe Hook, Double	wall	6x6x3	None
OPOI	3903	1	Computer,Personal & Monitor, Wireless Keyboard & Mouse for Desk Use: TO BE SPECIFIED BY OWNER	desktop	24"w x 18"d x 22"h	E 115V; Data
OPVI	3904a	1	Workstation; Wall Mounted for Computer Monitor & Keyboard+PC Holder; Folding Design;REQUIRES	wall mount	25" W x 10" D x Up to 34"h	E 115V; Data-Com
OPOI	8302	1	Tray, Plastic, Used for transferring items to & from Mayo Stand	stored	18"w x 12"l x 1"h	None
OPOI	8303	1	Hammer, Neuro Exam; Buck 7 3/4	stored	N/A	None
OPOI	8304	1	Hammer, Neuro Exam; Tomohawk	stored	N/A	None
OPOI	8305	1	Hammer, Neuro Exam; Queens Head Babinski	stored	N/A	None
OPOI	8306	1	Tuning Fork for Neuro Exam; 128	stored	N/A	None

OPOI	8307	1	Tuning Fork for Neuro Exam; 256	stored	N/A	None
OPOI	8308	1	Tuning Fork for Neuro Exam; 512	stored	N/A	None
OPOI	8309	1	Supplies, Consumable Exam Room; All paper products, gloves, gauze, cotton balls, speculums, etc.…	stored	Varies	None
OPOI	8573	1	Light Source for Vaginal Speculum with Transformer	countertop	n/a	E 120V for charger or Battery Operated
OPOI	8710	1	Manikin, Student Auscultation, Works through Laptop; OWNER TO SPECIFY MODEL	table top	24"w x 30"l	None
OPOI	8776	1	Integrated DX Sys; Otoscope-Ophthalmoscope-BP-w/Therm; Specula Disp:BACKING REQ;WA-	board mount	30"w x 16"h x 6"d	E 115V
CPCI	8850	1	Rack, Chart, To Be Located Outside of Exam Rooms	wall	Typical 14"w x 3"d x 11"h	None
OPOI	9301	1	Stand, Mayo, Removable Tray,Adj.Ht.	floor	16x20x40	None
OPOI	9314	1	Table/Chair, Examination, Powered, Adjustable Lift Back, Stirrups: Per Owner Request	floor	full ext 75" x 24.5"w x adj ht	E: 115V
OPOI	9854	1	Sundry Jar Set of 5, for Exam Room Supplys (tongue depressors, alcohol wipes, cotton balls, etc…)	countertop	each unit approx 4" diameter x 7"h	None

ARCH ROOM NO **2061**

ROOM TITLE **EXAM, CLINICAL**

GROUP	EQNO	QTY	DESCRIPTION	LOCATION	SIZE-STD	UTILITIES
OPVI	1005b	1	Chair, Side, No Arms, Vinyl Upholstery; SOFT BLACK CASTERS FOR HARD FLOORING	floor	23"W 18.3125"D 32.625"H	None
CPCI	1054	1	Clock System, Synchronized; Analogue, With Second Hand; Sized Appropriate for Space; Control System	wall	VARIES	E; Low Voltage
OPVI	1335a	1	Stool, No Backrest, Foot ring, Soft Casters For Hard Flooring, Pneumatic Adj. Ht.	floor	Typical 18"w x 16"d or 16" diameter	None
OPVI	1404b	1	Table, Folding, for SAM model; specifications per owner	floor	60"l x 18"d x 29"h	None
OPVI	3041	1	Wastebasket, Step-On,Plastic,Rectangular, Red/Bio Hazard 8 gallon	floor	16.26"W x15.75"D x17.25"H	None
OPVI	3062b	1	Wastebasket, Office,Tall, 23 gallon, Open Top; COLOR: GRAY	floor	11"w x 22"d x 30"h	None
OPOI	3088a	1	Container, Sharps: Countertop; 1 GALLON; Drop In Top: VERIFY OWNER SOURCE	Countertop	7"D x10.25"W x6"H	None

OPOI	3089	1	Dispenser, Quad Glove Box: finish options to be selected; Vertical or Horizontal Mount	wall mount	24"w x 12"h x 6"d	None
OPOI	3100	1	Dispenser, Paper Towel: TYPE TBD ? BY OWNER-CURRENT JANITORIAL SERVICE	wall mount	TBD	None
OPOI	3102	1	Dispenser, Soap: SPECIFICATIONS & Type TBD BY OWNER	wall mount	7"w x4"d x11.5"h	None
OPOI	3106	1	Mirror, Small, Option, To Be Located in the upper cabinet of exam rooms	inside cabinet	TBD	None
CPCI	3115	1	Robe Hook, Double	wall	6x6x3	None
OPOI	3903	1	Computer,Personal & Monitor, Wireless Keyboard & Mouse for Desk Use: TO BE SPECIFIED BY OWNER	desktop	24"w x 18"d x 22"h	E 115V; Data
OPVI	3904a	1	Workstation; Wall Mounted for Computer Monitor & Keyboard+PC Holder; Folding Design;REQUIRES	wall mount	25" W x 10" D x Up to 34"h	E 115V; Data-Com
OPOI	8302	1	Tray, Plastic, Used for transferring items to & from Mayo Stand	stored	18"w x 12"l x 1"h	None
OPOI	8303	1	Hammer, Neuro Exam; Buck 7 3/4	stored	N/A	None
OPOI	8304	1	Hammer, Neuro Exam; Tomohawk	stored	N/A	None
OPOI	8305	1	Hammer, Neuro Exam; Queens Head Babinski	stored	N/A	None
OPOI	8306	1	Tuning Fork for Neuro Exam; 128	stored	N/A	None
OPOI	8307	1	Tuning Fork for Neuro Exam; 256	stored	N/A	None
OPOI	8308	1	Tuning Fork for Neuro Exam; 512	stored	N/A	None
OPOI	8309	1	Supplies, Consumable Exam Room; All paper products, gloves, gauze, cotton balls, speculums, etc.…	stored	Varies	None
OPOI	8570d	1	Light,Examination; On mobile Stand; LED; Flexible Light Pipe;	floor	21" diameter	E 115V
OPOI	8710	1	Manikin, Student Auscultation, Works through Laptop; OWNER TO SPECIFY MODEL	table top	24"w x 30"l	None
OPOI	8776	1	Integrated DX Sys; Otoscope-Ophthalmoscope-BP-w/Therm; Specula Disp:BACKING REQ;WA-	board mount	30"w x 16"h x 6"d	E 115V

CPCI	8850	1	Rack, Chart, To Be Located Outside of Exam Rooms	wall	Typical 14"w x 3"d x 11"h	None
OPOI	9301	1	Stand, Mayo, Removable Tray,Adj.Ht.	floor	16x20x40	None
OPOI	9314	1	Table/Chair, Examination, Powered, Adjustable Lift Back, Stirrups: Per Owner Request	floor	full ext 75" x 24.5"w x adj ht	E: 115V
OPOI	9854	1	Sundry Jar Set of 5, for Exam Room Supplys (tongue depressors, alcohol wipes, cotton balls, etc…)	countertop	each unit approx 4" diameter x 7"h	None

ARCH ROOM NO 2062

ROOM TITLE CIRCULATION, SP LOCKERS AREA

GROUP	EQNO	QTY	DESCRIPTION	LOCATION	SIZE-STD	UTILITIES
OPVI	1005a	1	Chair, Side,MOLDED PLASTIC BACK & SEAT: HARD BLACK CASTERS FOR CARPET	floor	23"W 18.3125"D 32.625"H	None
CPCI	1054	1	Clock System, Synchronized; Analogue, With Second Hand; Sized Appropriate for Space; Control System	wall	VARIES	E; Low Voltage

ARCH ROOM NO 2063

ROOM TITLE TOILET, SP

GROUP	EQNO	QTY	DESCRIPTION	LOCATION	SIZE-STD	UTILITIES
OPVI	3043c	1	Waste Container, Drop in Top, Suitable for Restroom Areas, 15 gallon, Textured Black	floor	15" diameter x 30"h	None
OPOI	3088b	1	Container, Sharps: Wall Mounted, Lockable	Wall mount	10 1/2"W x 4 1/2"D x 12"H	None
OPOI	3100	1	Dispenser, Paper Towel: TYPE TBD ? BY OWNER-CURRENT JANITORIAL SERVICE	wall mount	TBD	None
OPOI	3102	1	Dispenser, Soap: SPECIFICATIONS & Type TBD BY OWNER	wall mount	7"w x4"d x11.5"h	None
CPCI	3115	1	Robe Hook, Double	wall	6x6x3	None

ARCH ROOM NO 2064

ROOM TITLE TOILET, SP

GROUP	EQNO	QTY	DESCRIPTION	LOCATION	SIZE-STD	UTILITIES
OPVI	3043c	1	Waste Container, Drop in Top, Suitable for Restroom Areas, 15 gallon, Textured Black	floor	15" diameter x 30"h	None
OPOI	3088b	1	Container, Sharps: Wall Mounted, Lockable	Wall mount	10 1/2"W x 4 1/2"D x 12"H	None
OPOI	3100	1	Dispenser, Paper Towel: TYPE TBD ? BY OWNER-CURRENT JANITORIAL SERVICE	wall mount	TBD	None

OPOI	3102	1	Dispenser, Soap: SPECIFICATIONS & Type TBD BY OWNER	wall mount	7"w x4"d x11.5"h	None
CPCI	3115	1	Robe Hook, Double	wall	6x6x3	None

ARCH ROOM NO **2065**

ROOM TITLE **SHOWER/CHANGING, SP**

GROUP	EQNO	QTY	DESCRIPTION	LOCATION	SIZE-STD	UTILITIES
OPVI	3016	1	Hamper, Linen, Mobile, Space Saving Triangular Shape for Corners, Step On, SS	floor	18" x 18" x 18" TRIANGULAR	None
OPVI	3039a	1	Wastebasket, Rectangular, plastic, water/fire resistant,28qt	floor	14lx11wx16h	None
OPOI	3088b	1	Container, Sharps: Wall Mounted, Lockable	Wall mount	10 1/2"W x 4 1/2"D x 12"H	None
CPCI	3115	2	Robe Hook, Double	wall	6x6x3	None
OPVI	9996b	1	Bench, Sitting Suitable for Location: Fabric-Stinson Fuse-Charcoal; Metal-Polished Aluminum	floor	Approx 48"w x 20"d x 20"h	None

ARCH ROOM NO **2066**

ROOM TITLE **LOUNGE; SP**

GROUP	EQNO	QTY	DESCRIPTION	LOCATION	SIZE-STD	UTILITIES
OPVI	0681	1	Cabinet, Credenza; Suitable for display of teaching materials; w/locking doors: Laminate Asian Night	floor	72"W x 24"D x 36"H	None
OPVI	1005b	12	Chair, Side, No Arms, Vinyl Upholstery; SOFT BLACK CASTERS FOR HARD FLOORING	floor	23"W 18.3125"D 32.625"H	None
CPCI	1054	1	Clock System, Synchronized; Analogue, With Second Hand; Sized Appropriate for Space; Control System	wall	VARIES	E; Low Voltage
OPVI	1402e	1	Table, Conference, POWER for table; 2 Data for Phones; DETAILS & FINISH TBD	floor	132"L X 42"D X 30"H	None
CPCI	2505	1	Board, Bulletin, Rubber Tack, Aluminum Frame	wall	48"w x 48"h x2"d	None
CPCI	2518	1	Board, Marker, Magnetic Cleanable Surface,w/Tray, 48" x 48" x 1"d	wall	48"w x48"h x1"d	None
CPCI	2523	1	Board, Marker; Large for Stage Area/Conference Spaces; Wall Mounted	wall	8'w x 4'h x2"d	None
OPOI	2944	1	Telephone, Wall Mounted: TO BE SPECIFIED BY OWNER	wall	8x3X10	Comm.
OPVI	3043	2	Wastebasket, Stainless Steel, Half Moon Shape 12 gal; Open Top; Perforated Panel	floor	18"w x32"hx12"D	None

OPOI	3100	1	Dispenser, Paper Towel: TYPE TBD ? BY OWNER-CURRENT JANITORIAL SERVICE	wall mount	TBD	None
OPOI	3102	1	Dispenser, Soap: SPECIFICATIONS & Type TBD BY OWNER	wall mount	7"w x4"d x11.5"h	None
OPVI	3194	1	Microwave, 1.6 Cu Ft, SS, 1100 Watts; multiple one touch options; 10 cooking levels,	counter/shelf	21.75"w x 13"h x 18.5"d	E 120V; 15 amps
OPSVI	3216a	1	Coffeemaker, Automatic, With Water Dispenser, 2 warmers	countertop	23.5"w x13.1"d x17.4"h	E 120V Ded: 13.3 amps; NEMA 5-15P; water supply
CPCI	3236a	1	Disposal, Garbage for Sink; SPECIFICATIONS TO BE PROVIDED BY MEP	attached/sink	See MFG Details	See MFG Details
OPVI	3269c	1	Refrigerator, Household, 2 Door, Freezer On Top (NO ICEMAKER)	floor	30"w x31"d x69"h	E Ded 115V
OPVICI	3305	1	IceMaker, ADA, Undercounter, 22 lb ice bin capacity; 80 lbs ice production/24 hrs	undercounter	14 7/8"w x 22 5/8"d x 31.5"h	E DED 115V/15 Amp Cir Brkr; 1850 BTU/hr

ARCH ROOM NO **2067**

ROOM TITLE **OFFICE, CLINICAL EXAM**

GROUP	EQNO	QTY	DESCRIPTION	LOCATION	SIZE-STD	UTILITIES
OPVI	0150a	1	Chair, Rotary,Std Mesh Back,5-Legged, HARD CASTERS-SOFT Flooring ,Ergonomic,Adj Arms, Black	floor	28.25"W 25.25"D 42.25"-47"H	None
OPVI	0200a	1	Chair, Desk Side Chair; HARD GLIDES FOR SOFT FLOORING: Upholstery: Stinson, Fuse, Tangelo	floor	25.25"W 22.25'1'D 33"H	None
OPVI	0700	1	Bookcase/Lateral file combination unit; High Pressure Laminate: Columbian Walnut?	floor	36"w x20"d x68"h	none
OPVI	1500	1	Workstation, Furniture System, Upper & Lower Storage: Laminate-Columbian Walnut; Fabric-Mandarian	floor	Various	E 115V Quads: Data-Comm
OPOI	2941	1	Telephone, Standard Desk: TO BE SPECIFIED BY OWNER	desktop	10"D X 8"W X 4"H	Data-Com
OPVI	3039a	1	Wastebasket, Rectangular, plastic, water/fire resistant,28qt	floor	14lx11wx16h	None
CPCI	3115	1	Robe Hook, Double	wall	6x6x3	None
OPOI	3907	1	Computer With Dual Monitor, Wireless Keyboard & Mouse; TO BE SPECIFIED BY OWNER	desk top	TBD	E 115V; Data

ARCH ROOM NO **2069**

ROOM TITLE **RESTROOM & DRESSING L2 N**

GROUP	EQNO	QTY	DESCRIPTION	LOCATION	SIZE-STD	UTILITIES
OPVI	3039a	1	Wastebasket, Rectangular, plastic, water/fire resistant,28qt	floor	14lx11wx16h	None

OPVI	3043c	1	Waste Container, Drop in Top, Suitable for Restroom Areas, 15 gallon, Textured Black	floor	15" diameter x 30"h	None
OPOI	3088b	1	Container, Sharps: Wall Mounted, Lockable	Wall mount	10 1/2"W x 4 1/2"D x 12"H	None
OPOI	3100	2	Dispenser, Paper Towel: TYPE TBD ? BY OWNER-CURRENT JANITORIAL SERVICE	wall mount	TBD	None
OPOI	3102	3	Dispenser, Soap: SPECIFICATIONS & Type TBD BY OWNER	wall mount	7"w x4"d x11.5"h	None
CPCI	3115	1	Robe Hook, Double	wall	6x6x3	None
CPCI	9993	1	Track, Cubicle Privacy Curtain, of Appropriate Size & fabric type	ceiling	as required-see layout	None:
OPVI	9996b	1	Bench, Sitting Suitable for Location: Fabric-Stinson Fuse-Charcoal; Metal-Polished Aluminum	floor	Approx 48"w x 20"d x 20"h	None

ARCH ROOM NO **2070**

ROOM TITLE **RESTROOM & DRESSING L2 N**

GROUP	EQNO	QTY	DESCRIPTION	LOCATION	SIZE-STD	UTILITIES
OPVI	3039a	1	Wastebasket, Rectangular, plastic, water/fire resistant,28qt	floor	14lx11wx16h	None
OPVI	3043c	1	Waste Container, Drop in Top, Suitable for Restroom Areas, 15 gallon, Textured Black	floor	15" diameter x 30"h	None
OPOI	3088b	1	Container, Sharps: Wall Mounted, Lockable	Wall mount	10 1/2"W x 4 1/2"D x 12"H	None
OPOI	3100	2	Dispenser, Paper Towel: TYPE TBD ? BY OWNER-CURRENT JANITORIAL SERVICE	wall mount	TBD	None
OPOI	3102	3	Dispenser, Soap: SPECIFICATIONS & Type TBD BY OWNER	wall mount	7"w x4"d x11.5"h	None
CPCI	3115	1	Robe Hook, Double	wall	6x6x3	None
CPCI	9993	1	Track, Cubicle Privacy Curtain, of Appropriate Size & fabric type	ceiling	as required-see layout	None:
OPVI	9996b	1	Bench, Sitting Suitable for Location: Fabric-Stinson Fuse-Charcoal; Metal-Polished Aluminum	floor	Approx 48"w x 20"d x 20"h	None

ARCH ROOM NO **2073**

ROOM TITLE **LAB, CLINICAL SKILLS**

GROUP	EQNO	QTY	DESCRIPTION	LOCATION	SIZE-STD	UTILITIES
OPVI	0212b	8	Chair, Conference Type; MOLDED PLASTIC BACK & SEAT, Soft BLACK Casters for Hard Floors	floor	25.875"W 21.3125"D 32.625"H	None

CPCI	1054	4	Clock System, Synchronized; Analogue, With Second Hand; Sized Appropriate for Space; Control System	wall	VARIES	E; Low Voltage
OPVI	1329	1	Stool, Bar; Static; with low profile back; no arms; small scale; Fabric: Bitmap-Sienna	floor	18.75"w x 23.75"d x 30.25"h	None
OPOI	1335	53	Stool, No Backrest, No Footring, On Hard Casters For Carpet, Pneumatic Adj HT (DONATED BY PEDIGO)	floor	18" Diameter	None
OPVI	1412b	2	Table, Round, 42" Diameter:	floor	42" diam x 30"h	None
OPVI	2254c	4	Shelving Unit, Open Wire Shelves, Mobile, With Bumper Guards	floor	60"w x 24" x 69"h	None
CPCI	2523	1	Board, Marker; Large for Stage Area/Conference Spaces; Wall Mounted	wall	8'w x 4'h x2"d	None
OPOI	2540	1	Anatomy Educational Models As Required to meet needs of classroom; Type & Qty TBD	stored	Varies	None
OPOI	2941	1	Telephone, Standard Desk: TO BE SPECIFIED BY OWNER	desktop	10"D X 8"W X 4"H	Data-Com
OPVI	3039a	24	Wastebasket, Rectangular, plastic, water/fire resistant,28qt	floor	14lx11wx16h	None
OPVI	3040c	4	Wastebasket, 23 Gallon, Slanted Front for easy Access; For Undercounter Areas Color GRAY	floor	11"w x22"l x25"h	None
OPVI	3043	3	Wastebasket, Stainless Steel, Half Moon Shape 12 gal; Open Top; Perforated Panel	floor	18"w x32"hx12"D	None
OPOI	3088a	26	Container, Sharps: Countertop; 1 GALLON; Drop In Top: VERIFY OWNER SOURCE	Countertop	7"D x10.25"W x6"H	None
OPOI	3100	4	Dispenser, Paper Towel: TYPE TBD ? BY OWNER-CURRENT JANITORIAL SERVICE	wall mount	TBD	None
OPOI	3102	4	Dispenser, Soap: SPECIFICATIONS & Type TBD BY OWNER	wall mount	7"w x4"d x11.5"h	None
OPOI	3903	2	Computer,Personal & Monitor, Wireless Keyboard & Mouse for Desk Use: TO BE SPECIFIED BY OWNER	desktop	24"w x 18"d x 22"h	E 115V; Data
OPOI	4103	1	Podium, Cabinet, Audio/Visual, Portable, For Up TO 2 PC & DUAL MONITOR; SPECS BY I.T. DEPT/3RD	floor	TBD By Design	E 115V Quad; 2 Data/?Com
OPOI	4106	1	Camera, Digital For Use in Labs: TO BE SPECIFIED BY OWNER I.T. DEPT	stored	n/a	None
OPOI	4107a	1	Camera, Digital; TV Monitor Mounted for displaying to Lab viewing monitors;BY OWNER I.T. DEPT	attached to TV	TBD	E 115; DATA; OR POE

OPOI	4108	1	Camera, Document for Classrooms: SPECS BY OWNER I.T. DEPT	Sits on 4103	11.7"w x19"d x18.8"h	E 115V, Data
OPOI	4130	2	Television, Flat Panel Monitor, 82" screen; Wall Mount REQUIRES BACKING; SPECS BY OWNER I.T.	wall mount	TYPICAL:72"w x 2.4"d x 45.1"h	E 115V; Data
OPOI	4131a	5	Television Monitor, Flat Panel, 65"; Ceiling Mount; REQ STRUCTURAL SUPPORT; I.T. & 3RD PARTY	ceiling mt	57.6"w x 2.5"d x 33.2"h	E 115V; Data
OPOI	4149	1	Scheduling System for Conference Room areas; 7" monitor display to be mtd outside of mtg space	wall mount	8.07"w x5.12"h x2.6"d	POE
OPOI	8710	3	Manikin, Student Auscultation, Works through Laptop; OWNER TO SPECIFY MODEL	table top	24"w x 30"l	None
OPOI	8776	8	Integrated DX Sys; Otoscope-Ophthalmoscope-BP-w/Therm; Specula Disp:BACKING REQ;WA-	board mount	30"w x 16"h x 6"d	E 115V
OPOI	8915	4	Scale, Multipurpose, Stand On, Mechanical with Eye Level, stadiometer	floor	14"w x15"d 59"h	None
OPOI	9299	12	Stand, IV, with 4 Rams Horn Hooks, 5 legged, mobile	floor	16" diameter	None
OPOI	9301	4	Stand, Mayo, Removable Tray,Adj.Ht.	floor	16x20x40	None
OPOI	9301a	1	Stand, Mayo, Removable Tray,Adj.Ht.; larger surface	floor	20"w x 25"d x adj ht	None
OPOI	9312a	1	Table, Patient Examination, Powered, Lowers to 14", On Casters	floor	27wx18-37hx72	E 115VAC,50/60Hz, 8amps
OPOI	9328	24	Table, Treatment, Rigid Top, Padded, H Brace	floor	30"w x 72"l x 31"h	None

ARCH ROOM NO **2074**

ROOM TITLE **STORAGE, LARGE; CLINICAL SKILLS LAB AREA**

GROUP	EQNO	QTY	DESCRIPTION	LOCATION	SIZE-STD	UTILITIES
OPVI	1329	1	Stool, Bar; Static; with low profile back; no arms; small scale; Fabric: Bitmap-Sienna	floor	18.75"w x 23.75"d x 30.25"h	None
OPVI	1413a	6	Table, Rectangular, Folding, 6 ft x 18 inches, White Top: FOR CLINICAL SKILLS LAB AREA	floor	72"l x18"d x29"h; FOLDED 2.5"	None
OPVI	2254	3	Shelving Unit, Open Wire Shelves, Mobile, With Bumper Guards	floor	36"w x 24"d x 69"h	None
OPVI	2254a	1	Shelving Unit, Open Wire Shelves, Mobile, with Bumper guards, drawer glide system & bins	floor	60""w x 24"d x69"h	None
OPOI	2944	1	Telephone, Wall Mounted: TO BE SPECIFIED BY OWNER	wall	8x3X10	Comm.

OPOI	3006	2	Cart, Utility, 2 shelf, 24" wide, Poly Materials	floor	24"wx 36"l x 32"h	None
OPVI	3043	1	Wastebasket, Stainless Steel, Half Moon Shape 12 gal; Open Top; Perforated Panel	floor	18"w x32"hx12"D	None

ARCH ROOM NO **2076**

ROOM TITLE **LOUNGE, STUDENT-GAME ROOM**

GROUP	EQNO	QTY	DESCRIPTION	LOCATION	SIZE-STD	UTILITIES
CPCI	1054	1	Clock System, Synchronized; Analogue, With Second Hand; Sized Appropriate for Space; Control System	wall	VARIES	E; Low Voltage
OPVI	1329	2	Stool, Bar; Static; with low profile back; no arms; small scale; Fabric: Bitmap-Sienna	floor	18.75"w x 23.75"d x 30.25"h	None
OPOI	1404	1	Table, Bistro Style, Round Top	floor	24"diameter x 42"h	None
OPOI	1812	1	Table, Indoor Tennis (Ping Pong), Heavy Duty On Casters, Folding, Includes Net	floor	108" x60" x 30"h	None
OPVI	3043e	1	Waste Container, Drop in Top, 25 Gallons, SS, RM Classic Series; Perforated	floor	18" diameter x 36"h	None
OPOI	4142	1	Dart Board Game, Electronic with Soft Tip Darts	floor	12.5"l x 23.5"w x 85"h	E 110V
OPOI	4144	1	Fooseball Gaming Unit; Regulation Size, Black Mica Cabinet, Solid Hard wood legs, Commercial Grade	floor	29"w x 55"l x 35"h	None

ARCH ROOM NO **2077**

ROOM TITLE **LOUNGE, STUDENT-KITCHEN AREA**

GROUP	EQNO	QTY	DESCRIPTION	LOCATION	SIZE-STD	UTILITIES
OPVI	1002	8	Chair, Side: SOLID POLYPROPYLENE BACK & SEAT; Soft Casters For Hard Flooring;	floor	22.25” W x 21.5” D x 33.75” H	None
OPVI	1024a	1	Seating, 3 Person, Couch Type With Contrasting Pillows (FABRIC SELECTION A, STUDENT LOUNGE)	floor	78”W x 33.5”D x 28”H	None
OPVI	1027a	1	Seating, 1 Person, Upholstered: Club Style; Design Features TBD; STUDENT LOUNGE-CHEVRON &	floor	32"W 33.5"D 28.25"H	None
CPCI	1054	1	Clock System, Synchronized; Analogue, With Second Hand; Sized Appropriate for Space; Control System	wall	VARIES	E; Low Voltage
OPVI	1327	10	Stool, Bar; Static; w/back; approp for counter areas; CAFÉ HT; DONI; ORANGE	floor	22.5”Wx21.5”Dx30”SH	None
OPVI	1412a	2	Table, Round: Diameter 36"	floor	36" diameter x 30"h	None
OPVI	1421	1	Table, Coffee; Suitable for Lounge/Waiting Areas	floor	36" diameter x 24"h	None

OPVI	3043e	1	Waste Container, Drop in Top, 25 Gallons, SS, RM Classic Series; Perforated	floor	18" diameter x 36"h	None
OPVI	3046a	2	Trash Collector, 32 Gal Brute, Vented, Round, Open Top: Color to be Selected (pkg of 6) GRAY	floor	21.92" Diameter; 25" with handles; 28"h	None
OPOI	3100	1	Dispenser, Paper Towel: TYPE TBD ? BY OWNER-CURRENT JANITORIAL SERVICE	wall mount	TBD	None
OPOI	3102	1	Dispenser, Soap: SPECIFICATIONS & Type TBD BY OWNER	wall mount	7"w x4"d x11.5"h	None
OPOI	3102a	1	Dispenser, Waterless Hand Sanitizer	wall	TBD	None
CPCI	3154	1	DISPENSER, HOT WATER; TO BE LOCATED ON SINK DECK	N/A	N/A	WATER SUPPLY
OPVI	3194	6	Microwave, 1.6 Cu Ft, SS, 1100 Watts; multiple one touch options; 10 cooking levels,	counter/shelf	21.75"w x 13"h x 18.5"d	E 120V; 15 amps
OPSVI	3216e	1	Coffeemaker, Automatic Dual Brewer, Sealed Vacuum, hot water dispenser:OWNER SPEC/3rd PARTY	countertop	20.25"w x20.5"d x35.25	E DED 220V; 30 amp; 4 wire plug
OPSVI	3217	1	Grinder, Coffee, Digital, Dual Compartment: 3RD PARTY VENDOR PROVIDED & INSTALLED	countertop	10.1"w x 17.3"d with plug; 29.3"h	E 120V; 8 amp; 1/2 HP
CPCI	3236a	1	Disposal, Garbage for Sink; SPECIFICATIONS TO BE PROVIDED BY MEP	attached/sink	See MFG Details	See MFG Details
OPVI	3269e	2	Refrigerator, Full, Residential, Single Door; Smudge Proof SS; Counter Depth; optional trim kit	floor	32"w x 26.5"d x 71.5"h with hinges	E Ded 115V; 20 Amp
OPVI	3269f	1	Freezer, Full, Residential, Single Door; Smudge Proof SS;Counter Depth; optional trim kit	floor	32"w x 26.5"d x 71.5"h with hinges	E Ded 115V; 20 Amp
OPVICI	3305	1	IceMaker, ADA, Undercounter, 22 lb ice bin capacity; 80 lbs ice production/24 hrs	undercounter	14 7/8"w x 22 5/8"d x 31.5"h	E DED 115V/15 Amp Cir Brkr; 1850 BTU/hr
OPSVI	3355	2	Vending Machine, Drink: PROVIDED & INSTALLED BY 3RD PARTY VENDOR	floor	41.2"w x38"d x72"h	E Ded-115V-10.5a-60Hz or 5a-230V-50Hz
OPOI	4136	1	Television-Monitor, High Resolution Flat Panel, 55", WaMount; REQUIRES BACKING: SPEC BY OWNER	wall or ceiling	49.2"w x 29"h x 3.1"d	E 115V; Cabling; Data
OPOI	4137a	1	Television, Flat Panel, 32" With Appropriate Mount; LED; OWNER TO SPEC: WALL MOUNT REQUIRES	wall	29.1"wx17.7"hx3.1"d	E 115V; Data

ARCH ROOM NO **2078**

ROOM TITLE **GROUP STUDY 12, L2**

GROUP	EQNO	QTY	DESCRIPTION	LOCATION	SIZE-STD	UTILITIES
OPVI	0212a	10	Chair, Conference Type; MOLDED PLASTIC BACK & SEAT On Hard Casters For Carpet	floor	25.875"W 21.3125"D 32.625"H	None

OPVI	1005a	1	Chair, Side,MOLDED PLASTIC BACK & SEAT: HARD BLACK CASTERS FOR CARPET	floor	23"W 18.3125"D 32.625"H	None
CPCI	1054	1	Clock System, Synchronized; Analogue, With Second Hand; Sized Appropriate for Space; Control System	wall	VARIES	E; Low Voltage
OPVI	1403b	4	Table, Educational Type, Flip Top, Nesting w/Optional Casters	floor	72"l x24"d x30"h	Req Access To Floor Utilities
CPCI	2523	2	Board, Marker; Large for Stage Area/Conference Spaces; Wall Mounted	wall	8'w x 4'h x2"d	None
OPOI	2944	1	Telephone, Wall Mounted: TO BE SPECIFIED BY OWNER	wall	8x3X10	Comm.
OPVI	3043	1	Wastebasket, Stainless Steel, Half Moon Shape 12 gal; Open Top; Perforated Panel	floor	18"w x32"hx12"D	None
OPOI	3907	1	Computer With Dual Monitor, Wireless Keyboard & Mouse; TO BE SPECIFIED BY OWNER	desk top	TBD	E 115V; Data
OPOI	4102	1	Cabinet, Audio/Visual, Portable, For 1 PC & MONITOR; SPECS TBD BY I.T. DEPT/3RD PARTY VENDOR	floor	TBD By Design	E 115V Quad; Data/?Com
OPOI	4109	1	Microphone, Ceiling Hung; Poly Com or Comparable, for Meeting Rooms: SPECIFIED BY OWNER I.T. DEPT	ceiling	TBD BY I.T.	TBD
OPOI	4110	1	Cam, Web or Poly Com Cam for Meeting Rooms: TO SPECIFIED BY OWNER I.T. DEPT	wall mount	TBD BY I.T.	TBD
OPOI	4131	1	Television Monitor, Flat Panel, 65"; Wall Mount; REQ BACKING: DETAILS BY I.T. & 3RD PARTY VENDOR	wall/ceiling mt	57.6"w x 2.5"d x 33.2"h	E 115V; Data
OPOI	4149	1	Scheduling System for Conference Room areas; 7" monitor display to be mtd outside of mtg space	wall mount	8.07"w x5.12"h x2.6"d	POE

DEPT TITLE LEVEL THREE:ADMIN-FACULTY-STAFF OFFICES, SUPPO

ARCH ROOM NO 3000

ROOM TITLE LOBBY, L3 CENTRAL AREA

GROUP	EQNO	QTY	DESCRIPTION	LOCATION	SIZE-STD	UTILITIES
OPVI	1027a	4	Seating, 1 Person, Upholstered: Club Style; Design Features TBD; STUDENT LOUNGE-CHEVRON &	floor	32"W 33.5"D 28.25"H	None
OPVI	1027c	4	Seating, 1 Person, Upholstered: Club Style; Design Features TBD; FABRIC; QUARRY & TANGELO	floor	32"W 33.5"D 28.25"H	None
OPVI	1421	2	Table, Coffee; Suitable for Lounge/Waiting Areas	floor	36" diameter x 24"h	None
OPVI	3043	1	Wastebasket, Stainless Steel, Half Moon Shape 12 gal; Open Top; Perforated Panel	floor	18"w x32"hx12"D	None
OPOI	4129	1	Monitor, Digital Directory; REQUIRES BACKING; Size & Details by Owner I.T./3RD Party Vendor	wall mount	TBD	E 115V; Data-Com
OPOI	8202	1	Defibrillator, External, Automated (AED) With Accessories	Stored	16"w x 14.75"h x8.5"d	None
CPCI	8202a	1	Cabinet, SEMI Recessed AED; Stainless Steel battery alarm/safety clasp/optional custom logo	recessed wall	wall opening 15.25"w x15.25"h x3.75"d	None

ARCH ROOM NO 3001

ROOM TITLE CONFERENCE ROOM, 1 FACULTY (NORTH CENTRAL)

GROUP	EQNO	QTY	DESCRIPTION	LOCATION	SIZE-STD	UTILITIES
OPVI	0211a	8	Chair, Conference Type, w/arms; Hard Casters for Soft Flooring, w/arms; Momentum Bravo II & Black	floor	25.5”W X 25.25”D X 41.75”H – 46.5”H	None
OPVI	1005a	1	Chair, Side,MOLDED PLASTIC BACK & SEAT: HARD BLACK CASTERS FOR CARPET	floor	23"W 18.3125"D 32.625"H	None
CPCI	1054	1	Clock System, Synchronized; Analogue, With Second Hand; Sized Appropriate for Space; Control System	wall	VARIES	E; Low Voltage
OPVI	1402a	1	Table, Conference, POWER for table; 2 Data for Phones; DETAILS & FINISH TBD	floor	108"L X 48"D X 30"H	E 115V-floor: Data-Com
CPCI	2523	1	Board, Marker; Large for Stage Area/Conference Spaces; Wall Mounted	wall	8'w x 4'h x2"d	None
OPOI	2945	1	Telephone, Conference: TO BE SPECIFIED BY OWNER	desktop	14X13X3	E 115V; Data-Com
OPVI	3043	1	Wastebasket, Stainless Steel, Half Moon Shape 12 gal; Open Top; Perforated Panel	floor	18"w x32"hx12"D	None
OPOI	3907	1	Computer With Dual Monitor, Wireless Keyboard & Mouse; TO BE SPECIFIED BY OWNER	desk top	TBD	E 115V; Data

OPOI	4102	1	Cabinet, Audio/Visual, Portable, For 1 PC & MONITOR; SPECS TBD BY I.T. DEPT/3RD PARTY VENDOR	floor	TBD By Design	E 115V Quad; Data/?Com
OPOI	4109	1	Microphone, Ceiling Hung; Poly Com or Comparable, for Meeting Rooms: SPECIFIED BY OWNER I.T. DEPT	ceiling	TBD BY I.T.	TBD
OPOI	4110	1	Cam, Web or Poly Com Cam for Meeting Rooms: TO SPECIFIED BY OWNER I.T. DEPT	wall mount	TBD BY I.T.	TBD
OPOI	4136	1	Television-Monitor, High Resolution Flat Panel, 55", WaMount; REQUIRES BACKING: SPEC BY OWNER	wall or ceiling	49.2"w x 29"h x 3.1"d	E 115V; Cabling; Data
OPOI	4149	1	Scheduling System for Conference Room areas; 7" monitor display to be mtd outside of mtg space	wall mount	8.07"w x5.12"h x2.6"d	POE

ARCH ROOM NO **3002**

ROOM TITLE **WORKROOM, FACULTY (COPY/MAIL)**

GROUP	EQNO	QTY	DESCRIPTION	LOCATION	SIZE-STD	UTILITIES
CPCI	1054	1	Clock System, Synchronized; Analogue, With Second Hand; Sized Appropriate for Space; Control System	wall	VARIES	E; Low Voltage
OPOI	1819	1	Stapler, Electric, Heavy Duty, 70 page capacity	countertop	5.7"w x 14.3"d x9.82"h	E 115V
OPOI	1821	1	Paper Punch; 3 Hole; 28 sheet capacity, electric, Commercial Grade	countertop	10.3"w x 19.6"d x7"h	E 115V
OPOI	1822	1	Paper Cutter, 400 sheet capacity, accepts up to 17" paper, clear embossed grib	countertop	21.75"l x 16"d x13.5"h with bar up	None
OPOI	2401	1	Cart, Utility; 3 Shelf; Mobile; Handles on Both Ends	floor	34"l x 19"d x 38"	None
OPOI	2944	1	Telephone, Wall Mounted: TO BE SPECIFIED BY OWNER	wall	8x3X10	Comm.
OPVI	3062b	1	Wastebasket, Office,Tall, 23 gallon, Open Top; COLOR: GRAY	floor	11"w x 22"d x 30"h	None
OPSVI	3758	1	Copier, High Vol, 55ppm, MF, networkable: EXISTING LEASE BY OWNER: INSTALLED BY 3RD PARTY	floor	Typical Options Req 6 ft x 3 ft	E-Ded 120V; 20 Amps; RJ 45 Plug Data-Com
OPVI	3764	1	Shredder, Cross Cut, 16 Gallon Capacity, Ultra Quiet, 14 sheets at time shred	floor	19.7”w x15"dx 34.25”h	E Ded 120V

ARCH ROOM NO **3003**

ROOM TITLE **STORAGE, JANITORIAL EQUIPMENT**

GROUP	EQNO	QTY	DESCRIPTION	LOCATION	SIZE-STD	UTILITIES
OPOI	3037	2	Vacuum,Wet/Dry, Shop Type, Mobile, 16 Gal., Low Design	floor	approx 24" diam x 36"h	E 120V
OPOI	3052a	3	Burnisher-Polisher, Floor, 17 5rpm, Corded (FINISHING TOUCHES)	floor/stored	22"w x 17"d x 42"h	E 120V

OPOI	3058	2	Extractor, Carpet, Multi Surface, Walk Behind, Maintenance free batteries (FINISHING TOUCHES)	floor	27"w x 19"d x 43"h	E 120 Charging: 6V Batteries; 255Ah
OPOI	3059a	4	Scrubber, floor, Orbital: Walk Behind: Battery Operated 24V; 11 Gal SOL TANK (FINISHING TOUCHES)	floor	49"l x21"w x43.5"h	E 120 Charging; 2-12V Batteries
OPOI	3060	2	Burnisher, Walk behind, with maintenance free Battery (FINISHING TOUCHES)	floor	59"l x24.5"w x42"h	E 120V
OPOI	3065b	6	Blow Dryer for Carpet, 3 speed, Mobile, w/handle (FINISHING TOUCHES)	floor	18"w x15"l x24	E 115V
OPOI	3972	2	Cart, Trades Utility; for Facilities Maintenance or I.T. Dept, w/doors/drawers/poly		19.25"w x38"l x33.4"h	None

ARCH ROOM NO **3006**

ROOM TITLE **LECTURE HALL 2**

GROUP	EQNO	QTY	DESCRIPTION	LOCATION	SIZE-STD	UTILITIES
OPVI	0212a	91	Chair, Conference Type; MOLDED PLASTIC BACK & SEAT On Hard Casters For Carpet	floor	25.875"W 21.3125"D 32.625"H	None
OPVI	1005a	4	Chair, Side,MOLDED PLASTIC BACK & SEAT: HARD BLACK CASTERS FOR CARPET	floor	23"W 18.3125"D 32.625"H	None
OPVI	1328	2	Stool, Bar; Static; w/back; approp for counter areas	floor	26.5"W 26.5"D 30"H	None
OPVI	1329	1	Stool, Bar; Static; with low profile back; no arms; small scale; Fabric: Bitmap-Sienna	floor	18.75"w x 23.75"d x 30.25"h	None
OPVI	1419	1	Table, Rectangular, On Casters, With Flip Top	floor	36"w x 24"d x 30"h	None
CPCI	1422	1	Table, Lecture Hall; Custom Size; Must have USB, Microphone & Power Outlet: CONTRACTOR TO INSTALL	floor	TBD BY DESIGN	SEE DESIGN DETAILS
CPCI	1424c	17	Table Educational LEC;CUSTOM SIZES 1 USB,1 Push/ Talk Mic /1 Power Per Student:CONTRACTOR TO	floor	Per Design	Access to Power & Data
CPCI	2523	1	Board, Marker; Large for Stage Area/Conference Spaces; Wall Mounted	wall	8'w x 4'h x2"d	None
OPVI	3043e	3	Waste Container, Drop in Top, 25 Gallons, SS, RM Classic Series; Perforated	floor	18" diameter x 36"h	None
OPOI	3907	1	Computer With Dual Monitor, Wireless Keyboard & Mouse; TO BE SPECIFIED BY OWNER	desk top	TBD	E 115V; Data
OPOI	3909	2	Kiosk Center, Information; For IPAD DETAILS & COMPONENTS TO BE SPECIFIED BY OWNER I.T. DEPT	floor	TBD	E 115V; Data
OPOI	4100	2	Cart, Charging With 3 Modules; SPECIFICATIONS BY OWNER I.T.	floor	Typical 33.50"W x 26.00"D x 44.5"H	E 120V; 12 Amp

OPOI	4103	1	Podium, Cabinet, Audio/Visual, Portable, For Up TO 2 PC & DUAL MONITOR; SPECS BY I.T. DEPT/3RD	floor	TBD By Design	E 115V Quad; 2 Data/?Com
OPOI	4106	1	Camera, Digital For Use in Labs: TO BE SPECIFIED BY OWNER I.T. DEPT	stored	n/a	None
OPOI	4107	2	Camera, Digital; Ceiling Mounted for displaying to Lab viewing monitors;BY OWNER I.T. DEPT	CEILING	TBD	E 115; DATA; OR POE
OPOI	4108	1	Camera, Document for Classrooms: SPECS BY OWNER I.T. DEPT	Sits on 4103	11.7"w x19"d x18.8"h	E 115V, Data
OPOI	4130	2	Television, Flat Panel Monitor, 82" screen; Wall Mount REQUIRES BACKING; SPECS BY OWNER I.T.	wall mount	TYPICAL:72"w x 2.4"d x 45.1"h	E 115V; Data
OPOI	4131a	3	Television Monitor, Flat Panel, 65"; Ceiling Mount; REQ STRUCTURAL SUPPORT; I.T. & 3RD PARTY	ceiling mt	57.6"w x 2.5"d x 33.2"h	E 115V; Data
OPOI	4149	2	Scheduling System for Conference Room areas; 7" monitor display to be mtd outside of mtg space	wall mount	8.07"w x5.12"h x2.6"d	POE

ARCH ROOM NO **3008**

ROOM TITLE **WAITING, SS**

GROUP	EQNO	QTY	DESCRIPTION	LOCATION	SIZE-STD	UTILITIES
OPVI	0681	1	Cabinet, Credenza; Suitable for display of teaching materials; w/locking doors: Laminate Asian Night	floor	72"W x 24"D x 36"H	None
OPVI	1026a	2	Seating, 1 Person, Upholstered: Club Style; Design Features TBD; GRAY W/ORANGE PIPING	floor	32"W 33.5"D 28.25"H S	None
CPCI	1054	1	Clock System, Synchronized; Analogue, With Second Hand; Sized Appropriate for Space; Control System	wall	VARIES	E; Low Voltage
OPVI	1410	1	Table, End, Drum Round 20" Diameter For Executive Areas: Color: Steel	floor	20” DIAMETER, 20”H	None
OPVI	3043	1	Wastebasket, Stainless Steel, Half Moon Shape 12 gal; Open Top; Perforated Panel	floor	18"w x32"hx12"D	None
OPOI	3909	1	Kiosk Center, Information; For IPAD DETAILS & COMPONENTS TO BE SPECIFIED BY OWNER I.T. DEPT	floor	TBD	E 115V; Data
OPOI	3913	1	Printer, Laser, Individual; TO BE SPECIFIED BY OWNER	countertop	16.3"w x16.6"d x17.7"h	E 115V; Data Comm
OPOI	4137	1	Television, Flat Panel, 46" WITH WALL MOUNT; OWNER TO SPECIFY DETAILS: REQUIRES BACKING	wall bracket	TYPICAL: 42"wx2.9"d x24.3"h	E 115V; Data

ARCH ROOM NO **3010**

ROOM TITLE **RECEPTION, FRONT- 1 EXECUTIVE ADMIN**

GROUP	EQNO	QTY	DESCRIPTION	LOCATION	SIZE-STD	UTILITIES
OPVI	0150b	1	Chair, Rotary,Std Mesh Back,5-Legged, SOFT CASTERS-HARD FLOORING , Ergonomic,Adj Arms,	floor	28.25"W 25.25"D 42.25”-47”H	None

OPVI	1026a	2	Seating, 1 Person, Upholstered: Club Style; Design Features TBD; GRAY W/ORANGE PIPING	floor	32"W 33.5"D 28.25"H S	None
OPVI	1410	1	Table, End, Drum Round 20" Diameter For Executive Areas: Color: Steel	floor	20” DIAMETER, 20”H	None
OPOI	2941	1	Telephone, Standard Desk: TO BE SPECIFIED BY OWNER	desktop	10"D X 8"W X 4"H	Data-Com
OPVI	3039a	1	Wastebasket, Rectangular, plastic, water/fire resistant,28qt	floor	14lx11wx16h	None
OPOI	3907	1	Computer With Dual Monitor, Wireless Keyboard & Mouse; TO BE SPECIFIED BY OWNER	desk top	TBD	E 115V; Data

ARCH ROOM NO **3011**

ROOM TITLE **OFFICE, EXECUTIVE 1**

GROUP	EQNO	QTY	DESCRIPTION	LOCATION	SIZE-STD	UTILITIES
OPVI	0151	1	Chair, Rotary,Std.Back,5-Legged,Ergonomic,Adj; High Back; Black Arms, Base, Hooded Casters	floor	27.5” W 26.5” D 44.5” – 49” H	None
OPVI	0213a	2	Chair, Conference Type, w/arms; Fully Uphol Back; Fabric-Grade 1 Pier Cali & Finish-Florence Walnut	floor	22-1/8”W x 24-1/2”D x 35-3/8”H	None
OPVI	0700a	1	Bookcase/Lateral file combination unit High Pressure Laminate Jasper 2H locking Lateral w/bookcase	floor	30"W x 24"D x 30”H	none
OPVI	1501b	1	CASEGOODS, DESKING; JASPER (ROOMS 3011 & 3012); Laminate-Florence Walnut; Fabric-Momentum	floor	See Design Details	E 115V Quad; Data Com
OPOI	2941	1	Telephone, Standard Desk: TO BE SPECIFIED BY OWNER	desktop	10"D X 8"W X 4"H	Data-Com
OPVI	3039a	1	Wastebasket, Rectangular, plastic, water/fire resistant,28qt	floor	14lx11wx16h	None
CPCI	3115	1	Robe Hook, Double	wall	6x6x3	None
OPOI	3907	1	Computer With Dual Monitor, Wireless Keyboard & Mouse; TO BE SPECIFIED BY OWNER	desk top	TBD	E 115V; Data

ARCH ROOM NO **3012**

ROOM TITLE **OFFICE, EXECUTIVE 2 (A)**

GROUP	EQNO	QTY	DESCRIPTION	LOCATION	SIZE-STD	UTILITIES
OPVI	0151	1	Chair, Rotary,Std.Back,5-Legged,Ergonomic,Adj; High Back; Black Arms, Base, Hooded Casters	floor	27.5” W 26.5” D 44.5” – 49” H	None
OPVI	0213a	2	Chair, Conference Type, w/arms; Fully Uphol Back; Fabric-Grade 1 Pier Cali & Finish-Florence Walnut	floor	22-1/8”W x 24-1/2”D x 35-3/8”H	None
OPVI	0700a	1	Bookcase/Lateral file combination unit High Pressure Laminate Jasper 2H locking Lateral w/bookcase	floor	30"W x 24"D x 30”H	none

OPVI	1501b	1	CASEGOODS, DESKING; JASPER (ROOMS 3011 & 3012); Laminate-Florence Walnut; Fabric-Momentum	floor	See Design Details	E 115V Quad; Data Com
OPOI	2941	1	Telephone, Standard Desk: TO BE SPECIFIED BY OWNER	desktop	10"D X 8"W X 4"H	Data-Com
OPVI	3039a	1	Wastebasket, Rectangular, plastic, water/fire resistant,28qt	floor	14lx11wx16h	None
OPOI	3907	1	Computer With Dual Monitor, Wireless Keyboard & Mouse; TO BE SPECIFIED BY OWNER	desk top	TBD	E 115V; Data
OPOI	4132	1	TV, Monitor Smart LED, 43" WITH WALL MOUNT: OWNER TO SPECIFY: REQUIRES BACKING	wall mount	38.1"w x 22.8"h x 4"d	E 115V; Data

ARCH ROOM NO **3015**

ROOM TITLE **OFFICE, A/A DEAN**

GROUP	EQNO	QTY	DESCRIPTION	LOCATION	SIZE-STD	UTILITIES
OPVI	0151	1	Chair, Rotary,Std.Back,5-Legged,Ergonomic,Adj; High Back; Black Arms, Base, Hooded Casters	floor	27.5” W 26.5” D 44.5” – 49” H	None
OPVI	0213a	4	Chair, Conference Type, w/arms; Fully Uphol Back; Fabric-Grade 1 Pier Cali & Finish-Florence Walnut	floor	22-1/8”W x 24-1/2”D x 35-3/8”H	None
OPVI	1412g	1	Table, Round, Diameter, 36": Laminate Florence Walnut	floor	36" diameter x 30"h	None
OPVI	1459	1	Workstation, Desk, Credenza; Upper & Lower Storage: Laminate Florence Walnut; Fabric-Momentum Steel	floor	SEE SPEC DETAILS	To be Near E 115V Quad; Data Com
OPOI	2941	1	Telephone, Standard Desk: TO BE SPECIFIED BY OWNER	desktop	10"D X 8"W X 4"H	Data-Com
OPVI	3039a	1	Wastebasket, Rectangular, plastic, water/fire resistant,28qt	floor	14lx11wx16h	None
OPOI	3907	1	Computer With Dual Monitor, Wireless Keyboard & Mouse; TO BE SPECIFIED BY OWNER	desk top	TBD	E 115V; Data
OPOI	3914	1	Printer, Multifunction, LaserJet mf copy/scan/fax	countertop	15"w x 18"d x 16"h	E 115V: Data
OPOI	4131	1	Television Monitor, Flat Panel, 65"; Wall Mount; REQ BACKING: DETAILS BY I.T. & 3RD PARTY VENDOR	wall/ceiling mt	57.6"w x 2.5"d x 33.2"h	E 115V; Data

ARCH ROOM NO **3016**

ROOM TITLE **RECEPTION, 2ND EXECUTIVE ADMIN**

GROUP	EQNO	QTY	DESCRIPTION	LOCATION	SIZE-STD	UTILITIES
OPVI	0150b	1	Chair, Rotary,Std Mesh Back,5-Legged, SOFT CASTERS-HARD FLOORING , Ergonomic,Adj Arms,	floor	28.25"W 25.25"D 42.25”-47”H	None
OPVI	1026a	1	Seating, 1 Person, Upholstered: Club Style; Design Features TBD; GRAY W/ORANGE PIPING	floor	32"W 33.5"D 28.25"H S	None

OPVI	1410	1	Table, End, Drum Round 20" Diameter For Executive Areas: Color: Steel	floor	20” DIAMETER, 20”H	None
OPOI	1830	1	Flag Set to Include American Flag; OK State Flag & Cherokee Nation Flag: 7 FT POLE-3'X5' FLAGS;	floor	12" BASE	None
OPOI	2941	1	Telephone, Standard Desk: TO BE SPECIFIED BY OWNER	desktop	10"D X 8"W X 4"H	Data-Com
OPVI	3039a	1	Wastebasket, Rectangular, plastic, water/fire resistant,28qt	floor	14lx11wx16h	None
OPOI	3907	1	Computer With Dual Monitor, Wireless Keyboard & Mouse; TO BE SPECIFIED BY OWNER	desk top	TBD	E 115V; Data

ARCH ROOM NO **3017**

ROOM TITLE **OFFICE, CAMPUS DEAN**

GROUP	EQNO	QTY	DESCRIPTION	LOCATION	SIZE-STD	UTILITIES
OPVI	0151	1	Chair, Rotary,Std.Back,5-Legged,Ergonomic,Adj; High Back; Black Arms, Base, Hooded Casters	floor	27.5” W 26.5” D 44.5” – 49” H	None
OPVI	0213a	4	Chair, Conference Type, w/arms; Fully Uphol Back; Fabric-Grade 1 Pier Cali & Finish-Florence Walnut	floor	22-1/8”W x 24-1/2”D x 35-3/8”H	None
OPVI	0385	2	Bookcase,Non-Sectional,Open, 5 Adj. Shelves; Florence Walnut	floor	36”W x 16”D x 72”H	None
OPVI	0700a	1	Bookcase/Lateral file combination unit High Pressure Laminate Jasper 2H locking Lateral w/bookcase	floor	30"W x 24"D x 30”H	none
OPVI	1026a	2	Seating, 1 Person, Upholstered: Club Style; Design Features TBD; GRAY W/ORANGE PIPING	floor	32"W 33.5"D 28.25"H S	None
OPVI	1410	1	Table, End, Drum Round 20" Diameter For Executive Areas: Color: Steel	floor	20” DIAMETER, 20”H	None
OPVI	1412g	1	Table, Round, Diameter, 36": Laminate Florence Walnut	floor	36" diameter x 30"h	None
OPVI	1501a	1	CASEGOODS, DESKING; JASPER (ROOM 3017); Laminate-Florence Walnut; Fabric-Momentum Steel	floor	See Design Details	E 115V Quad; Data Com
OPOI	2941	1	Telephone, Standard Desk: TO BE SPECIFIED BY OWNER	desktop	10"D X 8"W X 4"H	Data-Com
OPOI	2945	1	Telephone, Conference: TO BE SPECIFIED BY OWNER	desktop	14X13X3	E 115V; Data-Com
OPVI	3039a	1	Wastebasket, Rectangular, plastic, water/fire resistant,28qt	floor	14lx11wx16h	None
OPOI	3907	1	Computer With Dual Monitor, Wireless Keyboard & Mouse; TO BE SPECIFIED BY OWNER	desk top	TBD	E 115V; Data

OPOI	3914	1	Printer, Multifunction, LaserJet mf copy/scan/fax	countertop	15"w x 18"d x 16"h	E 115V: Data
OPOI	4131	1	Television Monitor, Flat Panel, 65"; Wall Mount; REQ BACKING: DETAILS BY I.T. & 3RD PARTY VENDOR	wall/ceiling mt	57.6"w x 2.5"d x 33.2"h	E 115V; Data

ARCH ROOM NO 3018

ROOM TITLE STORAGE, DEAN

GROUP	EQNO	QTY	DESCRIPTION	LOCATION	SIZE-STD	UTILITIES
OOOO	9999a	0	No Moveable Equipment Required	n/a	n/a	n/a

ARCH ROOM NO 3019

ROOM TITLE TOILET, EXECUTIVE

GROUP	EQNO	QTY	DESCRIPTION	LOCATION	SIZE-STD	UTILITIES
OPVI	1141	1	Stand, 2 Drawer for storage of personal care items: Executive Restroom	floor	24"w x 29"h x 20"d	None
OPVI	3043c	1	Waste Container, Drop in Top, Suitable for Restroom Areas, 15 gallon, Textured Black	floor	15" diameter x 30"h	None
OPOI	3100	1	Dispenser, Paper Towel: TYPE TBD ? BY OWNER-CURRENT JANITORIAL SERVICE	wall mount	TBD	None
OPOI	3102	1	Dispenser, Soap: SPECIFICATIONS & Type TBD BY OWNER	wall mount	7"w x4"d x11.5"h	None
CPCI	3106a	1	Mirror,Full Length, Dressing	wall	24x1x60	None
CPCI	3115	1	Robe Hook, Double	wall	6x6x3	None

ARCH ROOM NO 3020

ROOM TITLE OFFICE, OSUCHS PRESIDENT

GROUP	EQNO	QTY	DESCRIPTION	LOCATION	SIZE-STD	UTILITIES
OPVI	0151	1	Chair, Rotary,Std.Back,5-Legged,Ergonomic,Adj; High Back; Black Arms, Base, Hooded Casters	floor	27.5” W 26.5” D 44.5” – 49” H	None
OPVI	0213a	4	Chair, Conference Type, w/arms; Fully Uphol Back; Fabric-Grade 1 Pier Cali & Finish-Florence Walnut	floor	22-1/8”W x 24-1/2”D x 35-3/8”H	None
OPVI	1024	1	Seating, 3 Person, Couch Type With Contrasting 2 Black & 1 Orange Pillows)	floor	85 1⁄2”W X 30 1⁄4”D X 31 3⁄4”H	None
OPVI	1028	1	Seating, 1 Person, Upholstered: Unique Design Features; Fabric TBD: Presidents Office	floor	30"w x32"d x36	None
OPVI	1410	1	Table, End, Drum Round 20" Diameter For Executive Areas: Color: Steel	floor	20” DIAMETER, 20”H	None

OPVI	1412f	1	Table, Round, Diameter, 42" For Presidents Office: Laminate Florence Walnut	floor	42" diameter x 30"h	None
OPVI	1501	1	CASEGOODS, DESKING; JASPER (ROOM 3020); Laminate-Florence Walnut; Fabric-Momentum Steel	floor	See Design Details	E 115V Quad; Data Com
OPOI	2941	1	Telephone, Standard Desk: TO BE SPECIFIED BY OWNER	desktop	10"D X 8"W X 4"H	Data-Com
OPOI	2945	1	Telephone, Conference: TO BE SPECIFIED BY OWNER	desktop	14X13X3	E 115V; Data-Com
OPVI	3039a	1	Wastebasket, Rectangular, plastic, water/fire resistant,28qt	floor	14lx11wx16h	None
OPOI	3907	1	Computer With Dual Monitor, Wireless Keyboard & Mouse; TO BE SPECIFIED BY OWNER	desk top	TBD	E 115V; Data
OPOI	3914	1	Printer, Multifunction, LaserJet mf copy/scan/fax	countertop	15"w x 18"d x 16"h	E 115V: Data
OPOI	4131	1	Television Monitor, Flat Panel, 65"; Wall Mount; REQ BACKING: DETAILS BY I.T. & 3RD PARTY VENDOR	wall/ceiling mt	57.6"w x 2.5"d x 33.2"h	E 115V; Data

ARCH ROOM NO **3021**

ROOM TITLE **CONFERENCE ROOM, EXECUTIVE**

GROUP	EQNO	QTY	DESCRIPTION	LOCATION	SIZE-STD	UTILITIES
OPVI	0200a	4	Chair, Desk Side Chair; HARD GLIDES FOR SOFT FLOORING: Upholstery: Stinson, Fuse, Tangelo	floor	25.25"W 22.25'1'D 33"H	None
OPVI	0211b	12	Chair, Conference Type, w/arms; Soft Casters for Hard Flooring, w/arms; Momentum Bravo II & Black	floor	Typical 24"w x24"d x32"h	None
CPCI	1054	1	Clock System, Synchronized; Analogue, With Second Hand; Sized Appropriate for Space; Control System	wall	VARIES	E; Low Voltage
OPVI	1401	1	Table, Conference: FORMAL:WHITE STRIP-ASIAN NIGHT FOR EXECUTIVE MTS: REQ	floor	54"W x 144"L x 29”H	E 115V; DATA; USB
CPCI	2518	1	Board, Marker, Magnetic Cleanable Surface,w/Tray, 48" x 48" x 1"d	wall	48"w x48"h x1"d	None
OPOI	2945	1	Telephone, Conference: TO BE SPECIFIED BY OWNER	desktop	14X13X3	E 115V; Data-Com
OPVI	3043	2	Wastebasket, Stainless Steel, Half Moon Shape 12 gal; Open Top; Perforated Panel	floor	18"w x32"hx12"D	None
OPOI	3903	1	Computer,Personal & Monitor, Wireless Keyboard & Mouse for Desk Use: TO BE SPECIFIED BY OWNER	desktop	24"w x 18"d x 22"h	E 115V; Data
OPOI	4102	1	Cabinet, Audio/Visual, Portable, For 1 PC & MONITOR; SPECS TBD BY I.T. DEPT/3RD PARTY VENDOR	floor	TBD By Design	E 115V Quad; Data/?Com

OPOI	4109	1	Microphone, Ceiling Hung; Poly Com or Comparable, for Meeting Rooms: SPECIFIED BY OWNER I.T. DEPT	ceiling	TBD BY I.T.	TBD
OPOI	4110	1	Cam, Web or Poly Com Cam for Meeting Rooms: TO SPECIFIED BY OWNER I.T. DEPT	wall mount	TBD BY I.T.	TBD
OPOI	4131	1	Television Monitor, Flat Panel, 65"; Wall Mount; REQ BACKING: DETAILS BY I.T. & 3RD PARTY VENDOR	wall/ceiling mt	57.6"w x 2.5"d x 33.2"h	E 115V; Data

ARCH ROOM NO **3022**

ROOM TITLE **KITCHENETTE, EXECUTIVE AREA**

GROUP	EQNO	QTY	DESCRIPTION	LOCATION	SIZE-STD	UTILITIES
CPCI	1054	1	Clock System, Synchronized; Analogue, With Second Hand; Sized Appropriate for Space; Control System	wall	VARIES	E; Low Voltage
OPVI	2254	1	Shelving Unit, Open Wire Shelves, Mobile, With Bumper Guards	floor	36"w x 24"d x 69"h	None
OPVI	3062b	1	Wastebasket, Office,Tall, 23 gallon, Open Top; COLOR: GRAY	floor	11"w x 22"d x 30"h	None
OPOI	3100	1	Dispenser, Paper Towel: TYPE TBD ? BY OWNER-CURRENT JANITORIAL SERVICE	wall mount	TBD	None
OPOI	3102	1	Dispenser, Soap: SPECIFICATIONS & Type TBD BY OWNER	wall mount	7"w x4"d x11.5"h	None
CPCI	3154	1	DISPENSER, HOT WATER; TO BE LOCATED ON SINK DECK	N/A	N/A	WATER SUPPLY
OPVI	3194	1	Microwave, 1.6 Cu Ft, SS, 1100 Watts; multiple one touch options; 10 cooking levels,	counter/shelf	21.75"w x 13"h x 18.5"d	E 120V; 15 amps
OPSVI	3216a	1	Coffeemaker, Automatic, With Water Dispenser, 2 warmers	countertop	23.5"w x13.1"d x17.4"h	E 120V Ded: 13.3 amps; NEMA 5-15P; water supply
CPCI	3236a	1	Disposal, Garbage for Sink; SPECIFICATIONS TO BE PROVIDED BY MEP	attached/sink	See MFG Details	See MFG Details
OPVI	3269c	1	Refrigerator, Household, 2 Door, Freezer On Top (NO ICEMAKER)	floor	30"w x31"d x69"h	E Ded 115V
OPVICI	3305	1	IceMaker, ADA, Undercounter, 22 lb ice bin capacity; 80 lbs ice production/24 hrs	undercounter	14 7/8"w x 22 5/8"d x 31.5"h	E DED 115V/15 Amp Cir Brkr; 1850 BTU/hr
OPVICI	3352a	1	Dishwasher, High End Residential, Energy Star Rated, 5 Cycle Including Sanitize, 3 Racks, SS	floor	Req Cut out: 33 7/8"h x 23 5/8"w x 24"d	E 120V; Ded 12 amp; 1440 watts; Water/Drain

ARCH ROOM NO **3023**

ROOM TITLE **OFFICE, EXECUTIVE 3**

GROUP	EQNO	QTY	DESCRIPTION	LOCATION	SIZE-STD	UTILITIES
OPVI	0151	1	Chair, Rotary,Std.Back,5-Legged,Ergonomic,Adj; High Back; Black Arms, Base, Hooded Casters	floor	27.5” W 26.5” D 44.5” – 49” H	None

OPVI	0213a	2	Chair, Conference Type, w/arms; Fully Uphol Back; Fabric-Grade 1 Pier Cali & Finish-Florence Walnut	floor	22-1/8”W x 24-1/2”D x 35-3/8”H	None
OPVI	0700a	1	Bookcase/Lateral file combination unit High Pressure Laminate Jasper 2H locking Lateral w/bookcase	floor	30"W x 24"D x 30”H	none
OPVI	1501b	1	CASEGOODS, DESKING; JASPER (ROOMS 3011 & 3012); Laminate-Florence Walnut; Fabric-Momentum	floor	See Design Details	E 115V Quad; Data Com
OPOI	2941	1	Telephone, Standard Desk: TO BE SPECIFIED BY OWNER	desktop	10"D X 8"W X 4"H	Data-Com
OPVI	3039a	1	Wastebasket, Rectangular, plastic, water/fire resistant,28qt	floor	14lx11wx16h	None
CPCI	3115	1	Robe Hook, Double	wall	6x6x3	None
OPOI	3907	1	Computer With Dual Monitor, Wireless Keyboard & Mouse; TO BE SPECIFIED BY OWNER	desk top	TBD	E 115V; Data

ARCH ROOM NO **3024**

ROOM TITLE **STORAGE, EXECUTIVE AREA**

GROUP	EQNO	QTY	DESCRIPTION	LOCATION	SIZE-STD	UTILITIES
OPVI	0430b	1	Cabinet, Filing 5 drawer, Vertical, Locking: Color: Loft	floor	28.5”D X 18.25”W X 60”H	None
OPVI	0680	1	Cabinet, Storage, 6 Adj.Shelves,2 Doors,Lock: Color Black	floor	24.13”D X 36”W X 72”H	None
OPVI	2254	1	Shelving Unit, Open Wire Shelves, Mobile, With Bumper Guards	floor	36"w x 24"d x 69"h	None
OPOI	2401	1	Cart, Utility; 3 Shelf; Mobile; Handles on Both Ends	floor	34"l x 19"d x 38"	None
CPCI	2525	2	Easel, Presentation	stored	29x2x40 stored	

ARCH ROOM NO **3025**

ROOM TITLE **WORK AREA-COPY/SUPPLY FOR EXECUTIVE AREA**

GROUP	EQNO	QTY	DESCRIPTION	LOCATION	SIZE-STD	UTILITIES
OPOI	1819	1	Stapler, Electric, Heavy Duty, 70 page capacity	countertop	5.7"w x 14.3"d x9.82"h	E 115V
OPOI	1821	1	Paper Punch; 3 Hole; 28 sheet capacity, electric, Commercial Grade	countertop	10.3"w x 19.6"d x7"h	E 115V
OPOI	1822	1	Paper Cutter, 400 sheet capacity, accepts up to 17" paper, clear embossed grib	countertop	21.75"l x 16"d x13.5"h with bar up	None
OPOI	2944	1	Telephone, Wall Mounted: TO BE SPECIFIED BY OWNER	wall	8x3X10	Comm.

OPVI	3062b	1	Wastebasket, Office,Tall, 23 gallon, Open Top; COLOR: GRAY	floor	11"w x 22"d x 30"h	None
OPSVI	3758	1	Copier, High Vol, 55ppm, MF, networkable: EXISTING LEASE BY OWNER: INSTALLED BY 3RD PARTY	floor	Typical Options Req 6 ft x 3 ft	E-Ded 120V; 20 Amps; RJ 45 Plug Data-Com
OPVI	3764	1	Shredder, Cross Cut, 16 Gallon Capacity, Ultra Quiet, 14 sheets at time shred	floor	19.7”w x15"dx 34.25”h	E Ded 120V
OPOI	3769	1	Laminator, Tabletop Model?; TO BE SPECIFIED BY OWNER I.T.	TABLETOP	16.92" L x 18.11" W x 11.14" H	E 120V

ARCH ROOM NO **3027**

ROOM TITLE **CONFERENCE ROOM, 3 FACULTY (EXECUTIVE AREA)**

GROUP	EQNO	QTY	DESCRIPTION	LOCATION	SIZE-STD	UTILITIES
OPVI	0211a	10	Chair, Conference Type, w/arms; Hard Casters for Soft Flooring, w/arms; Momentum Bravo II & Black	floor	25.5”W X 25.25”D X 41.75”H – 46.5”H	None
OPVI	1005a	1	Chair, Side,MOLDED PLASTIC BACK & SEAT: HARD BLACK CASTERS FOR CARPET	floor	23"W 18.3125"D 32.625"H	None
CPCI	1054	1	Clock System, Synchronized; Analogue, With Second Hand; Sized Appropriate for Space; Control System	wall	VARIES	E; Low Voltage
OPVI	1402	1	Table, Conference, POWER for table; 2 Data for Phones; DETAILS & FINISH TBD	floor	144"L X 54"D X 29"H	POWER TB COORDINATED W/MEP
CPCI	2523	1	Board, Marker; Large for Stage Area/Conference Spaces; Wall Mounted	wall	8'w x 4'h x2"d	None
OPOI	2945	1	Telephone, Conference: TO BE SPECIFIED BY OWNER	desktop	14X13X3	E 115V; Data-Com
OPVI	3043	1	Wastebasket, Stainless Steel, Half Moon Shape 12 gal; Open Top; Perforated Panel	floor	18"w x32"hx12"D	None
OPOI	3907	1	Computer With Dual Monitor, Wireless Keyboard & Mouse; TO BE SPECIFIED BY OWNER	desk top	TBD	E 115V; Data
OPOI	4102	1	Cabinet, Audio/Visual, Portable, For 1 PC & MONITOR; SPECS TBD BY I.T. DEPT/3RD PARTY VENDOR	floor	TBD By Design	E 115V Quad; Data/?Com
OPOI	4109	1	Microphone, Ceiling Hung; Poly Com or Comparable, for Meeting Rooms: SPECIFIED BY OWNER I.T. DEPT	ceiling	TBD BY I.T.	TBD
OPOI	4110	1	Cam, Web or Poly Com Cam for Meeting Rooms: TO SPECIFIED BY OWNER I.T. DEPT	wall mount	TBD BY I.T.	TBD
OPOI	4131	1	Television Monitor, Flat Panel, 65"; Wall Mount; REQ BACKING: DETAILS BY I.T. & 3RD PARTY VENDOR	wall/ceiling mt	57.6"w x 2.5"d x 33.2"h	E 115V; Data
OPOI	4149	1	Scheduling System for Conference Room areas; 7" monitor display to be mtd outside of mtg space	wall mount	8.07"w x5.12"h x2.6"d	POE

ARCH ROOM NO 3028

ROOM TITLE OFFICE, SHARED (2 I.T. STAFF)

GROUP	EQNO	QTY	DESCRIPTION	LOCATION	SIZE-STD	UTILITIES
OPVI	0150a	2	Chair, Rotary,Std Mesh Back,5-Legged, HARD CASTERS-SOFT Flooring ,Ergonomic,Adj Arms, Black	floor	28.25"W 25.25"D 42.25”-47”H	None
OPVI	0200a	1	Chair, Desk Side Chair; HARD GLIDES FOR SOFT FLOORING: Upholstery: Stinson, Fuse, Tangelo	floor	25.25"W 22.25'1'D 33"H	None
OPVI	0700	2	Bookcase/Lateral file combination unit; High Pressure Laminate: Columbian Walnut?	floor	36"w x20"d x68"h	none
OPVI	1500	2	Workstation, Furniture System, Upper & Lower Storage: Laminate-Columbian Walnut; Fabric-Mandarian	floor	Various	E 115V Quads: Data-Comm
OPOI	2941	2	Telephone, Standard Desk: TO BE SPECIFIED BY OWNER	desktop	10"D X 8"W X 4"H	Data-Com
OPVI	3039a	2	Wastebasket, Rectangular, plastic, water/fire resistant,28qt	floor	14lx11wx16h	None
CPCI	3115	1	Robe Hook, Double	wall	6x6x3	None
OPOI	3907	2	Computer With Dual Monitor, Wireless Keyboard & Mouse; TO BE SPECIFIED BY OWNER	desk top	TBD	E 115V; Data

ARCH ROOM NO 3029

ROOM TITLE OFFICE, STAFF

GROUP	EQNO	QTY	DESCRIPTION	LOCATION	SIZE-STD	UTILITIES
OPVI	0150a	1	Chair, Rotary,Std Mesh Back,5-Legged, HARD CASTERS-SOFT Flooring ,Ergonomic,Adj Arms, Black	floor	28.25"W 25.25"D 42.25”-47”H	None
OPVI	0200a	2	Chair, Desk Side Chair; HARD GLIDES FOR SOFT FLOORING: Upholstery: Stinson, Fuse, Tangelo	floor	25.25"W 22.25'1'D 33"H	None
OPVI	1413c	1	Table, Rectangular, Ht Adj: TYLER I.T. MGR:	floor	46.5"l x23.5"d x 26 to 52"h	None
OPVI	1500	1	Workstation, Furniture System, Upper & Lower Storage: Laminate-Columbian Walnut; Fabric-Mandarian	floor	Various	E 115V Quads: Data-Comm
OPOI	2941	1	Telephone, Standard Desk: TO BE SPECIFIED BY OWNER	desktop	10"D X 8"W X 4"H	Data-Com
OPVI	3039a	1	Wastebasket, Rectangular, plastic, water/fire resistant,28qt	floor	14lx11wx16h	None
CPCI	3115	1	Robe Hook, Double	wall	6x6x3	None
OPOI	3907	1	Computer With Dual Monitor, Wireless Keyboard & Mouse; TO BE SPECIFIED BY OWNER	desk top	TBD	E 115V; Data

ARCH ROOM NO 3030

ROOM TITLE OFFICE, SHARED (2 STAFF)

GROUP	EQNO	QTY	DESCRIPTION	LOCATION	SIZE-STD	UTILITIES
OPVI	0150a	2	Chair, Rotary,Std Mesh Back,5-Legged, HARD CASTERS-SOFT Flooring ,Ergonomic,Adj Arms, Black	floor	28.25"W 25.25"D 42.25”-47”H	None
OPVI	0200a	1	Chair, Desk Side Chair; HARD GLIDES FOR SOFT FLOORING: Upholstery: Stinson, Fuse, Tangelo	floor	25.25"W 22.25'1'D 33"H	None
OPVI	0700	2	Bookcase/Lateral file combination unit; High Pressure Laminate: Columbian Walnut?	floor	36"w x20"d x68"h	none
OPVI	1500	2	Workstation, Furniture System, Upper & Lower Storage: Laminate-Columbian Walnut; Fabric-Mandarian	floor	Various	E 115V Quads: Data-Comm
OPOI	2941	2	Telephone, Standard Desk: TO BE SPECIFIED BY OWNER	desktop	10"D X 8"W X 4"H	Data-Com
OPVI	3039a	2	Wastebasket, Rectangular, plastic, water/fire resistant,28qt	floor	14lx11wx16h	None
CPCI	3115	1	Robe Hook, Double	wall	6x6x3	None
OPOI	3907	2	Computer With Dual Monitor, Wireless Keyboard & Mouse; TO BE SPECIFIED BY OWNER	desk top	TBD	E 115V; Data

ARCH ROOM NO 3031

ROOM TITLE OFFICE, STAFF

GROUP	EQNO	QTY	DESCRIPTION	LOCATION	SIZE-STD	UTILITIES
OPVI	0150a	1	Chair, Rotary,Std Mesh Back,5-Legged, HARD CASTERS-SOFT Flooring ,Ergonomic,Adj Arms, Black	floor	28.25"W 25.25"D 42.25”-47”H	None
OPVI	0200a	2	Chair, Desk Side Chair; HARD GLIDES FOR SOFT FLOORING: Upholstery: Stinson, Fuse, Tangelo	floor	25.25"W 22.25'1'D 33"H	None
OPVI	0700	1	Bookcase/Lateral file combination unit; High Pressure Laminate: Columbian Walnut?	floor	36"w x20"d x68"h	none
OPVI	1500	1	Workstation, Furniture System, Upper & Lower Storage: Laminate-Columbian Walnut; Fabric-Mandarian	floor	Various	E 115V Quads: Data-Comm
OPOI	2941	1	Telephone, Standard Desk: TO BE SPECIFIED BY OWNER	desktop	10"D X 8"W X 4"H	Data-Com
OPVI	3039a	1	Wastebasket, Rectangular, plastic, water/fire resistant,28qt	floor	14lx11wx16h	None
CPCI	3115	1	Robe Hook, Double	wall	6x6x3	None
OPOI	3907	1	Computer With Dual Monitor, Wireless Keyboard & Mouse; TO BE SPECIFIED BY OWNER	desk top	TBD	E 115V; Data

ARCH ROOM NO 3032

ROOM TITLE OFFICE, STAFF

GROUP	EQNO	QTY	DESCRIPTION	LOCATION	SIZE-STD	UTILITIES
OPVI	0150a	1	Chair, Rotary,Std Mesh Back,5-Legged, HARD CASTERS-SOFT Flooring ,Ergonomic,Adj Arms, Black	floor	28.25"W 25.25"D 42.25”-47”H	None
OPVI	0200a	2	Chair, Desk Side Chair; HARD GLIDES FOR SOFT FLOORING: Upholstery: Stinson, Fuse, Tangelo	floor	25.25"W 22.25'1'D 33"H	None
OPVI	0700	1	Bookcase/Lateral file combination unit; High Pressure Laminate: Columbian Walnut?	floor	36"w x20"d x68"h	none
OPVI	1500	1	Workstation, Furniture System, Upper & Lower Storage: Laminate-Columbian Walnut; Fabric-Mandarian	floor	Various	E 115V Quads: Data-Comm
OPOI	2941	1	Telephone, Standard Desk: TO BE SPECIFIED BY OWNER	desktop	10"D X 8"W X 4"H	Data-Com
OPVI	3039a	1	Wastebasket, Rectangular, plastic, water/fire resistant,28qt	floor	14lx11wx16h	None
CPCI	3115	1	Robe Hook, Double	wall	6x6x3	None
OPOI	3907	1	Computer With Dual Monitor, Wireless Keyboard & Mouse; TO BE SPECIFIED BY OWNER	desk top	TBD	E 115V; Data

ARCH ROOM NO 3033

ROOM TITLE OFFICE, SHARED (2 STAFF)

GROUP	EQNO	QTY	DESCRIPTION	LOCATION	SIZE-STD	UTILITIES
OPVI	0150a	2	Chair, Rotary,Std Mesh Back,5-Legged, HARD CASTERS-SOFT Flooring ,Ergonomic,Adj Arms, Black	floor	28.25"W 25.25"D 42.25”-47”H	None
OPVI	0200a	1	Chair, Desk Side Chair; HARD GLIDES FOR SOFT FLOORING: Upholstery: Stinson, Fuse, Tangelo	floor	25.25"W 22.25'1'D 33"H	None
OPVI	0700	2	Bookcase/Lateral file combination unit; High Pressure Laminate: Columbian Walnut?	floor	36"w x20"d x68"h	none
OPVI	1500	2	Workstation, Furniture System, Upper & Lower Storage: Laminate-Columbian Walnut; Fabric-Mandarian	floor	Various	E 115V Quads: Data-Comm
OPOI	2941	2	Telephone, Standard Desk: TO BE SPECIFIED BY OWNER	desktop	10"D X 8"W X 4"H	Data-Com
OPVI	3039a	2	Wastebasket, Rectangular, plastic, water/fire resistant,28qt	floor	14lx11wx16h	None
CPCI	3115	1	Robe Hook, Double	wall	6x6x3	None
OPOI	3907	2	Computer With Dual Monitor, Wireless Keyboard & Mouse; TO BE SPECIFIED BY OWNER	desk top	TBD	E 115V; Data

ARCH ROOM NO 3034

ROOM TITLE OFFICE, I.T. STAFF WORKROOM (MULTIPLE POWER/DATA)

GROUP	EQNO	QTY	DESCRIPTION	LOCATION	SIZE-STD	UTILITIES
OPVI	2254	1	Shelving Unit, Open Wire Shelves, Mobile, With Bumper Guards	floor	36"w x 24"d x 69"h	None
OPVI	2602	2	Stool, For Technical & Industrial Environments, Ergonomic	floor	18.75" X 17.5" X 21.75" – 31.25"	None
OPVI	2603	2	Bench, Work for I.T. Technician Repair Area: Lights/Bins/Power/Data Strip	floor	60"w x 24"d x Adj Ht	E 115V x 2 Quad: 2 Data-com
OPOI	2752	2	Mats, Runners, Anti Fatigue, Reconfigurable	floor	36"w x 24"d	None
OPOI	2941	1	Telephone, Standard Desk: TO BE SPECIFIED BY OWNER	desktop	10"D X 8"W X 4"H	Data-Com
OPVI	3062b	1	Wastebasket, Office,Tall, 23 gallon, Open Top; COLOR: GRAY	floor	11"w x 22"d x 30"h	None
CPCI	3115	1	Robe Hook, Double	wall	6x6x3	None
OPOI	3202	2	Bin, Parts, Storage, Mobile, Double Sided Louvered Panel Customize Bins, 5" Swivel Casters w/brake	floor	36"w x 25.75"d x72.5"h	None

ARCH ROOM NO 3035

ROOM TITLE ALCOVE, COPY, S FACULTY (NEAR BACK CORRIDOR)

GROUP	EQNO	QTY	DESCRIPTION	LOCATION	SIZE-STD	UTILITIES
OPVI	3062b	1	Wastebasket, Office,Tall, 23 gallon, Open Top; COLOR: GRAY	floor	11"w x 22"d x 30"h	None
OPSVI	3758	1	Copier, High Vol, 55ppm, MF, networkable: EXISTING LEASE BY OWNER: INSTALLED BY 3RD PARTY	floor	Typical Options Req 6 ft x 3 ft	E-Ded 120V; 20 Amps; RJ 45 Plug Data-Com
OPVI	3764	1	Shredder, Cross Cut, 16 Gallon Capacity, Ultra Quiet, 14 sheets at time shred	floor	19.7"w x15"dx 34.25"h	E Ded 120V

ARCH ROOM NO 3039

ROOM TITLE CONFERENCE ROOM, SS

GROUP	EQNO	QTY	DESCRIPTION	LOCATION	SIZE-STD	UTILITIES
OPVI	0211a	8	Chair, Conference Type, w/arms; Hard Casters for Soft Flooring, w/arms; Momentum Bravo II & Black	floor	25.5"W X 25.25"D X 41.75"H – 46.5"H	None
OPVI	0681	1	Cabinet, Credenza; Suitable for display of teaching materials; w/locking doors: Laminate Asian Night	floor	72"W x 24"D x 36"H	None
CPCI	1054	1	Clock System, Synchronized; Analogue, With Second Hand; Sized Appropriate for Space; Control System	wall	VARIES	E; Low Voltage

OPVI	1402a	1	Table, Conference, POWER for table; 2 Data for Phones; DETAILS & FINISH TBD	floor	108"L X 48"D X 30"H	E 115V-floor: Data-Com
CPCI	2523	1	Board, Marker; Large for Stage Area/Conference Spaces; Wall Mounted	wall	8'w x 4'h x2"d	None
OPOI	2945	1	Telephone, Conference: TO BE SPECIFIED BY OWNER	desktop	14X13X3	E 115V; Data-Com
OPVI	3043	1	Wastebasket, Stainless Steel, Half Moon Shape 12 gal; Open Top; Perforated Panel	floor	18"w x32"hx12"D	None
OPOI	3903	1	Computer,Personal & Monitor, Wireless Keyboard & Mouse for Desk Use: TO BE SPECIFIED BY OWNER	desktop	24"w x 18"d x 22"h	E 115V; Data
OPOI	4102	1	Cabinet, Audio/Visual, Portable, For 1 PC & MONITOR; SPECS TBD BY I.T. DEPT/3RD PARTY VENDOR	floor	TBD By Design	E 115V Quad; Data/?Com
OPOI	4109	1	Microphone, Ceiling Hung; Poly Com or Comparable, for Meeting Rooms: SPECIFIED BY OWNER I.T. DEPT	ceiling	TBD BY I.T.	TBD
OPOI	4110	1	Cam, Web or Poly Com Cam for Meeting Rooms: TO SPECIFIED BY OWNER I.T. DEPT	wall mount	TBD BY I.T.	TBD
OPOI	4136	1	Television-Monitor, High Resolution Flat Panel, 55", WaMount; REQUIRES BACKING: SPEC BY OWNER	wall or ceiling	49.2"w x 29"h x 3.1"d	E 115V; Cabling; Data

ARCH ROOM NO **3040**

ROOM TITLE **WORKROOM/COPY**

GROUP	EQNO	QTY	DESCRIPTION	LOCATION	SIZE-STD	UTILITIES
OPOI	1819	1	Stapler, Electric, Heavy Duty, 70 page capacity	countertop	5.7"w x 14.3"d x9.82"h	E 115V
OPOI	1821	1	Paper Punch; 3 Hole; 28 sheet capacity, electric, Commercial Grade	countertop	10.3"w x 19.6"d x7"h	E 115V
OPOI	1822	1	Paper Cutter, 400 sheet capacity, accepts up to 17" paper, clear embossed grib	countertop	21.75"l x 16"d x13.5"h with bar up	None
OPVI	3062b	1	Wastebasket, Office,Tall, 23 gallon, Open Top; COLOR: GRAY	floor	11"w x 22"d x 30"h	None
OPSVI	3758	1	Copier, High Vol, 55ppm, MF, networkable: EXISTING LEASE BY OWNER: INSTALLED BY 3RD PARTY	floor	Typical Options Req 6 ft x 3 ft	E-Ded 120V; 20 Amps; RJ 45 Plug Data-Com
OPVI	3764	1	Shredder, Cross Cut, 16 Gallon Capacity, Ultra Quiet, 14 sheets at time shred	floor	19.7"w x15"dx 34.25"h	E Ded 120V
OPOI	3927	1	Printer, Transcript, Color, Individual, Laser (SPECIFICATIONS BY OWNER I.T.)	countertop	14.3"wx 19"dx 13.7"h	E 120V; Data

ARCH ROOM NO **3041**

ROOM TITLE **ALCOVE, COFFEE, STUDENT SERVICES AREA**

GROUP	EQNO	QTY	DESCRIPTION	LOCATION	SIZE-STD	UTILITIES

OPVI	3043	1	Wastebasket, Stainless Steel, Half Moon Shape 12 gal; Open Top; Perforated Panel	floor	18"w x32"hx12"D	None
OPVI	3194	1	Microwave, 1.6 Cu Ft, SS, 1100 Watts; multiple one touch options; 10 cooking levels,	counter/shelf	21.75"w x 13"h x 18.5"d	E 120V; 15 amps
OPSVI	3216a	1	Coffeemaker, Automatic, With Water Dispenser, 2 warmers	countertop	23.5"w x13.1"d x17.4"h	E 120V Ded: 13.3 amps; NEMA 5-15P; water supply
OPVI	3310	1	Refrigerator, Undercounter, ADA 5.5 cubit ft, auto defrost, 5 YR Compressor Warranty, Color TBD	floor	23.63"w x 23.5"d x 32"h	E Ded 115V

ARCH ROOM NO **3042**

ROOM TITLE **STORAGE, FILE, SS, HIGH DENSITY**

GROUP	EQNO	QTY	DESCRIPTION	LOCATION	SIZE-STD	UTILITIES
OPVI	0403	4	Cabinet, Lateral File, Fire Proof 1 Hour, Color: Loft	floor	31"w x 22"d x 53"h	None
OPVI	0403f	8	Cabinet, Lateral File, Fire Proof 1 Hour, Color TBD: FUTURE PURCHASE	floor	31"w x 22"d x 53"h	None
OPVI	0680	2	Cabinet, Storage, 6 Adj.Shelves,2 Doors,Lock: Color Black	floor	24.13”D X 36”W X 72”H	None
OPVI	2254	1	Shelving Unit, Open Wire Shelves, Mobile, With Bumper Guards	floor	36"w x 24"d x 69"h	None
OPOI	2401	1	Cart, Utility; 3 Shelf; Mobile; Handles on Both Ends	floor	34"l x 19"d x 38"	None
OPOI	2405	1	Truck, Platform with solid steel deck & Handle at the end; 400 lb capacity	floor/stored	18"w x 28"l x 5.5"h at deckx33" handle	None
OPOI	2455	1	Dolly, Wheeled, Convertible, flatless tires, aluminum, 1000 lb capacity	floor	18"w x 18.75"d x 45.5"h	None
OPVI	3062b	1	Wastebasket, Office,Tall, 23 gallon, Open Top; COLOR: GRAY	floor	11"w x 22"d x 30"h	None

ARCH ROOM NO **3043**

ROOM TITLE **OFFICE, ASSISTANT SA & WC**

GROUP	EQNO	QTY	DESCRIPTION	LOCATION	SIZE-STD	UTILITIES
OPVI	0150a	1	Chair, Rotary,Std Mesh Back,5-Legged, HARD CASTERS-SOFT Flooring ,Ergonomic,Adj Arms, Black	floor	28.25"W 25.25"D 42.25”-47”H	None
OPVI	0201	2	Chair, Guest Type for Admin settings; Hard Glides for Soft Flooring; No Arms;	floor	25.25"W 22.25"D 33"H	None
OPVI	0700	1	Bookcase/Lateral file combination unit; High Pressure Laminate: Columbian Walnut?	floor	36"w x20"d x68"h	none
OPVI	1500	1	Workstation, Furniture System, Upper & Lower Storage: Laminate-Columbian Walnut; Fabric-Mandarian	floor	Various	E 115V Quads: Data-Comm

OPOI	2941	1	Telephone, Standard Desk: TO BE SPECIFIED BY OWNER	desktop	10"D X 8"W X 4"H	Data-Com
OPVI	3039a	1	Wastebasket, Rectangular, plastic, water/fire resistant,28qt	floor	14lx11wx16h	None
CPCI	3115	1	Robe Hook, Double	wall	6x6x3	None
OPOI	3907	1	Computer With Dual Monitor, Wireless Keyboard & Mouse; TO BE SPECIFIED BY OWNER	desk top	TBD	E 115V; Data

ARCH ROOM NO **3044**

ROOM TITLE **OFFICE, ADMIN ASSISTANT, SS**

GROUP	EQNO	QTY	DESCRIPTION	LOCATION	SIZE-STD	UTILITIES
OPVI	0150a	1	Chair, Rotary,Std Mesh Back,5-Legged, HARD CASTERS-SOFT Flooring ,Ergonomic,Adj Arms, Black	floor	28.25"W 25.25"D 42.25”-47”H	None
OPOI	2941	1	Telephone, Standard Desk: TO BE SPECIFIED BY OWNER	desktop	10"D X 8"W X 4"H	Data-Com
OPVI	3039a	1	Wastebasket, Rectangular, plastic, water/fire resistant,28qt	floor	14lx11wx16h	None
OPOI	3907	1	Computer With Dual Monitor, Wireless Keyboard & Mouse; TO BE SPECIFIED BY OWNER	desk top	TBD	E 115V; Data

ARCH ROOM NO **3045**

ROOM TITLE **OFFICE, ADDT 1**

GROUP	EQNO	QTY	DESCRIPTION	LOCATION	SIZE-STD	UTILITIES
OPVI	0150a	1	Chair, Rotary,Std Mesh Back,5-Legged, HARD CASTERS-SOFT Flooring ,Ergonomic,Adj Arms, Black	floor	28.25"W 25.25"D 42.25”-47”H	None
OPVI	0201	2	Chair, Guest Type for Admin settings; Hard Glides for Soft Flooring; No Arms;	floor	25.25"W 22.25"D 33"H	None
OPVI	0700	1	Bookcase/Lateral file combination unit; High Pressure Laminate: Columbian Walnut?	floor	36"w x20"d x68"h	none
OPVI	1500	1	Workstation, Furniture System, Upper & Lower Storage: Laminate-Columbian Walnut; Fabric-Mandarian	floor	Various	E 115V Quads: Data-Comm
OPOI	2941	1	Telephone, Standard Desk: TO BE SPECIFIED BY OWNER	desktop	10"D X 8"W X 4"H	Data-Com
OPVI	3039a	1	Wastebasket, Rectangular, plastic, water/fire resistant,28qt	floor	14lx11wx16h	None
CPCI	3115	1	Robe Hook, Double	wall	6x6x3	None
OPOI	3907	1	Computer With Dual Monitor, Wireless Keyboard & Mouse; TO BE SPECIFIED BY OWNER	desk top	TBD	E 115V; Data

ARCH ROOM NO 3046

ROOM TITLE OFFICE, ADMIN LOAN

GROUP	EQNO	QTY	DESCRIPTION	LOCATION	SIZE-STD	UTILITIES
OPVI	0150a	1	Chair, Rotary,Std Mesh Back,5-Legged, HARD CASTERS-SOFT Flooring ,Ergonomic,Adj Arms, Black	floor	28.25"W 25.25"D 42.25”-47”H	None
OPVI	0201	2	Chair, Guest Type for Admin settings; Hard Glides for Soft Flooring; No Arms;	floor	25.25"W 22.25"D 33"H	None
OPVI	0700	1	Bookcase/Lateral file combination unit; High Pressure Laminate: Columbian Walnut?	floor	36"w x20"d x68"h	none
OPVI	1500	1	Workstation, Furniture System, Upper & Lower Storage: Laminate-Columbian Walnut; Fabric-Mandarian	floor	Various	E 115V Quads: Data-Comm
OPOI	2941	1	Telephone, Standard Desk: TO BE SPECIFIED BY OWNER	desktop	10"D X 8"W X 4"H	Data-Com
OPVI	3039a	1	Wastebasket, Rectangular, plastic, water/fire resistant,28qt	floor	14lx11wx16h	None
CPCI	3115	1	Robe Hook, Double	wall	6x6x3	None
OPOI	3907	1	Computer With Dual Monitor, Wireless Keyboard & Mouse; TO BE SPECIFIED BY OWNER	desk top	TBD	E 115V; Data

ARCH ROOM NO 3047

ROOM TITLE OFFICE, ADDT 2

GROUP	EQNO	QTY	DESCRIPTION	LOCATION	SIZE-STD	UTILITIES
OPVI	0150a	1	Chair, Rotary,Std Mesh Back,5-Legged, HARD CASTERS-SOFT Flooring ,Ergonomic,Adj Arms, Black	floor	28.25"W 25.25"D 42.25”-47”H	None
OPVI	0201	2	Chair, Guest Type for Admin settings; Hard Glides for Soft Flooring; No Arms;	floor	25.25"W 22.25"D 33"H	None
OPVI	0700	1	Bookcase/Lateral file combination unit; High Pressure Laminate: Columbian Walnut?	floor	36"w x20"d x68"h	none
OPVI	1500	1	Workstation, Furniture System, Upper & Lower Storage: Laminate-Columbian Walnut; Fabric-Mandarian	floor	Various	E 115V Quads: Data-Comm
OPOI	2941	1	Telephone, Standard Desk: TO BE SPECIFIED BY OWNER	desktop	10"D X 8"W X 4"H	Data-Com
OPVI	3039a	1	Wastebasket, Rectangular, plastic, water/fire resistant,28qt	floor	14lx11wx16h	None
CPCI	3115	1	Robe Hook, Double	wall	6x6x3	None
OPOI	3907	1	Computer With Dual Monitor, Wireless Keyboard & Mouse; TO BE SPECIFIED BY OWNER	desk top	TBD	E 115V; Data

ARCH ROOM NO 3048

ROOM TITLE OFFICE, ASSISTANT REGISTRAR, SS

GROUP	EQNO	QTY	DESCRIPTION	LOCATION	SIZE-STD	UTILITIES
OPVI	0150a	1	Chair, Rotary,Std Mesh Back,5-Legged, HARD CASTERS-SOFT Flooring ,Ergonomic,Adj Arms, Black	floor	28.25"W 25.25"D 42.25”-47”H	None
OPVI	0201	2	Chair, Guest Type for Admin settings; Hard Glides for Soft Flooring; No Arms;	floor	25.25"W 22.25"D 33"H	None
OPVI	0700	1	Bookcase/Lateral file combination unit; High Pressure Laminate: Columbian Walnut?	floor	36"w x20"d x68"h	none
OPVI	1500	1	Workstation, Furniture System, Upper & Lower Storage: Laminate-Columbian Walnut; Fabric-Mandarian	floor	Various	E 115V Quads: Data-Comm
OPOI	2941	1	Telephone, Standard Desk: TO BE SPECIFIED BY OWNER	desktop	10"D X 8"W X 4"H	Data-Com
OPVI	3039a	1	Wastebasket, Rectangular, plastic, water/fire resistant,28qt	floor	14lx11wx16h	None
CPCI	3115	1	Robe Hook, Double	wall	6x6x3	None
OPOI	3907	1	Computer With Dual Monitor, Wireless Keyboard & Mouse; TO BE SPECIFIED BY OWNER	desk top	TBD	E 115V; Data

ARCH ROOM NO 3049

ROOM TITLE OFFICE, ADDT 3

GROUP	EQNO	QTY	DESCRIPTION	LOCATION	SIZE-STD	UTILITIES
OPVI	0150a	1	Chair, Rotary,Std Mesh Back,5-Legged, HARD CASTERS-SOFT Flooring ,Ergonomic,Adj Arms, Black	floor	28.25"W 25.25"D 42.25”-47”H	None
OPVI	0201	2	Chair, Guest Type for Admin settings; Hard Glides for Soft Flooring; No Arms;	floor	25.25"W 22.25"D 33"H	None
OPVI	0700	1	Bookcase/Lateral file combination unit; High Pressure Laminate: Columbian Walnut?	floor	36"w x20"d x68"h	none
OPVI	1500	1	Workstation, Furniture System, Upper & Lower Storage: Laminate-Columbian Walnut; Fabric-Mandarian	floor	Various	E 115V Quads: Data-Comm
OPOI	2941	1	Telephone, Standard Desk: TO BE SPECIFIED BY OWNER	desktop	10"D X 8"W X 4"H	Data-Com
OPVI	3039a	1	Wastebasket, Rectangular, plastic, water/fire resistant,28qt	floor	14lx11wx16h	None
CPCI	3115	1	Robe Hook, Double	wall	6x6x3	None
OPOI	3907	1	Computer With Dual Monitor, Wireless Keyboard & Mouse; TO BE SPECIFIED BY OWNER	desk top	TBD	E 115V; Data

ARCH ROOM NO 3050

ROOM TITLE OFFICE, LEARNING/SPEC, SS

GROUP	EQNO	QTY	DESCRIPTION	LOCATION	SIZE-STD	UTILITIES
OPVI	0150a	1	Chair, Rotary,Std Mesh Back,5-Legged, HARD CASTERS-SOFT Flooring ,Ergonomic,Adj Arms, Black	floor	28.25"W 25.25"D 42.25”-47”H	None
OPVI	0201	2	Chair, Guest Type for Admin settings; Hard Glides for Soft Flooring; No Arms;	floor	25.25"W 22.25"D 33"H	None
OPVI	0700	1	Bookcase/Lateral file combination unit; High Pressure Laminate: Columbian Walnut?	floor	36"w x20"d x68"h	none
OPVI	1500	1	Workstation, Furniture System, Upper & Lower Storage: Laminate-Columbian Walnut; Fabric-Mandarian	floor	Various	E 115V Quads: Data-Comm
OPOI	2941	1	Telephone, Standard Desk: TO BE SPECIFIED BY OWNER	desktop	10"D X 8"W X 4"H	Data-Com
OPVI	3039a	1	Wastebasket, Rectangular, plastic, water/fire resistant,28qt	floor	14lx11wx16h	None
CPCI	3115	1	Robe Hook, Double	wall	6x6x3	None
OPOI	3907	1	Computer With Dual Monitor, Wireless Keyboard & Mouse; TO BE SPECIFIED BY OWNER	desk top	TBD	E 115V; Data

ARCH ROOM NO 3052

ROOM TITLE OFFICE, STAFF

GROUP	EQNO	QTY	DESCRIPTION	LOCATION	SIZE-STD	UTILITIES
OPVI	0150a	1	Chair, Rotary,Std Mesh Back,5-Legged, HARD CASTERS-SOFT Flooring ,Ergonomic,Adj Arms, Black	floor	28.25"W 25.25"D 42.25”-47”H	None
OPVI	0200a	2	Chair, Desk Side Chair; HARD GLIDES FOR SOFT FLOORING: Upholstery: Stinson, Fuse, Tangelo	floor	25.25"W 22.25'1'D 33"H	None
OPVI	0700	2	Bookcase/Lateral file combination unit; High Pressure Laminate: Columbian Walnut?	floor	36"w x20"d x68"h	none
OPVI	1500	1	Workstation, Furniture System, Upper & Lower Storage: Laminate-Columbian Walnut; Fabric-Mandarian	floor	Various	E 115V Quads: Data-Comm
OPOI	2941	1	Telephone, Standard Desk: TO BE SPECIFIED BY OWNER	desktop	10"D X 8"W X 4"H	Data-Com
OPVI	3039a	1	Wastebasket, Rectangular, plastic, water/fire resistant,28qt	floor	14lx11wx16h	None
CPCI	3115	1	Robe Hook, Double	wall	6x6x3	None
OPOI	3907	1	Computer With Dual Monitor, Wireless Keyboard & Mouse; TO BE SPECIFIED BY OWNER	desk top	TBD	E 115V; Data

ARCH ROOM NO 3053

ROOM TITLE OFFICE, STAFF

GROUP	EQNO	QTY	DESCRIPTION	LOCATION	SIZE-STD	UTILITIES
OPVI	0150a	1	Chair, Rotary,Std Mesh Back,5-Legged, HARD CASTERS-SOFT Flooring ,Ergonomic,Adj Arms, Black	floor	28.25"W 25.25"D 42.25”-47”H	None
OPVI	0200a	1	Chair, Desk Side Chair; HARD GLIDES FOR SOFT FLOORING: Upholstery: Stinson, Fuse, Tangelo	floor	25.25"W 22.25'1'D 33"H	None
OPVI	0700	2	Bookcase/Lateral file combination unit; High Pressure Laminate: Columbian Walnut?	floor	36"w x20"d x68"h	none
OPVI	1500	1	Workstation, Furniture System, Upper & Lower Storage: Laminate-Columbian Walnut; Fabric-Mandarian	floor	Various	E 115V Quads: Data-Comm
OPOI	2941	1	Telephone, Standard Desk: TO BE SPECIFIED BY OWNER	desktop	10"D X 8"W X 4"H	Data-Com
OPVI	3039a	1	Wastebasket, Rectangular, plastic, water/fire resistant,28qt	floor	14lx11wx16h	None
CPCI	3115	1	Robe Hook, Double	wall	6x6x3	None
OPOI	3907	1	Computer With Dual Monitor, Wireless Keyboard & Mouse; TO BE SPECIFIED BY OWNER	desk top	TBD	E 115V; Data

ARCH ROOM NO 3054

ROOM TITLE OFFICE, FACULTY

GROUP	EQNO	QTY	DESCRIPTION	LOCATION	SIZE-STD	UTILITIES
OPVI	0150a	1	Chair, Rotary,Std Mesh Back,5-Legged, HARD CASTERS-SOFT Flooring ,Ergonomic,Adj Arms, Black	floor	28.25"W 25.25"D 42.25”-47”H	None
OPVI	0200a	2	Chair, Desk Side Chair; HARD GLIDES FOR SOFT FLOORING: Upholstery: Stinson, Fuse, Tangelo	floor	25.25"W 22.25'1'D 33"H	None
OPVI	0700	2	Bookcase/Lateral file combination unit; High Pressure Laminate: Columbian Walnut?	floor	36"w x20"d x68"h	none
OPVI	1500	1	Workstation, Furniture System, Upper & Lower Storage: Laminate-Columbian Walnut; Fabric-Mandarian	floor	Various	E 115V Quads: Data-Comm
OPOI	2941	1	Telephone, Standard Desk: TO BE SPECIFIED BY OWNER	desktop	10"D X 8"W X 4"H	Data-Com
OPVI	3039a	1	Wastebasket, Rectangular, plastic, water/fire resistant,28qt	floor	14lx11wx16h	None
CPCI	3115	1	Robe Hook, Double	wall	6x6x3	None
OPOI	3907	1	Computer With Dual Monitor, Wireless Keyboard & Mouse; TO BE SPECIFIED BY OWNER	desk top	TBD	E 115V; Data

ARCH ROOM NO 3055

ROOM TITLE OFFICE, STAFF

GROUP	EQNO	QTY	DESCRIPTION	LOCATION	SIZE-STD	UTILITIES
OPVI	0150a	1	Chair, Rotary,Std Mesh Back,5-Legged, HARD CASTERS-SOFT Flooring ,Ergonomic,Adj Arms, Black	floor	28.25"W 25.25"D 42.25”-47”H	None
OPVI	0200a	1	Chair, Desk Side Chair; HARD GLIDES FOR SOFT FLOORING: Upholstery: Stinson, Fuse, Tangelo	floor	25.25"W 22.25'1'D 33"H	None
OPVI	0700	2	Bookcase/Lateral file combination unit; High Pressure Laminate: Columbian Walnut?	floor	36"w x20"d x68"h	none
OPVI	1500	1	Workstation, Furniture System, Upper & Lower Storage: Laminate-Columbian Walnut; Fabric-Mandarian	floor	Various	E 115V Quads: Data-Comm
OPOI	2941	1	Telephone, Standard Desk: TO BE SPECIFIED BY OWNER	desktop	10"D X 8"W X 4"H	Data-Com
OPVI	3039a	1	Wastebasket, Rectangular, plastic, water/fire resistant,28qt	floor	14lx11wx16h	None
CPCI	3115	1	Robe Hook, Double	wall	6x6x3	None
OPOI	3907	1	Computer With Dual Monitor, Wireless Keyboard & Mouse; TO BE SPECIFIED BY OWNER	desk top	TBD	E 115V; Data

ARCH ROOM NO 3056

ROOM TITLE OFFICE, FACULTY

GROUP	EQNO	QTY	DESCRIPTION	LOCATION	SIZE-STD	UTILITIES
OPVI	0150a	1	Chair, Rotary,Std Mesh Back,5-Legged, HARD CASTERS-SOFT Flooring ,Ergonomic,Adj Arms, Black	floor	28.25"W 25.25"D 42.25”-47”H	None
OPVI	0200a	2	Chair, Desk Side Chair; HARD GLIDES FOR SOFT FLOORING: Upholstery: Stinson, Fuse, Tangelo	floor	25.25"W 22.25'1'D 33"H	None
OPVI	0700	2	Bookcase/Lateral file combination unit; High Pressure Laminate: Columbian Walnut?	floor	36"w x20"d x68"h	none
OPVI	1500	1	Workstation, Furniture System, Upper & Lower Storage: Laminate-Columbian Walnut; Fabric-Mandarian	floor	Various	E 115V Quads: Data-Comm
OPOI	2941	1	Telephone, Standard Desk: TO BE SPECIFIED BY OWNER	desktop	10"D X 8"W X 4"H	Data-Com
OPVI	3039a	1	Wastebasket, Rectangular, plastic, water/fire resistant,28qt	floor	14lx11wx16h	None
CPCI	3115	1	Robe Hook, Double	wall	6x6x3	None
OPOI	3907	1	Computer With Dual Monitor, Wireless Keyboard & Mouse; TO BE SPECIFIED BY OWNER	desk top	TBD	E 115V; Data

ARCH ROOM NO 3057

ROOM TITLE OFFICE, STAFF

GROUP	EQNO	QTY	DESCRIPTION	LOCATION	SIZE-STD	UTILITIES
OPVI	0150a	1	Chair, Rotary,Std Mesh Back,5-Legged, HARD CASTERS-SOFT Flooring ,Ergonomic,Adj Arms, Black	floor	28.25"W 25.25"D 42.25”-47”H	None
OPVI	0200a	1	Chair, Desk Side Chair; HARD GLIDES FOR SOFT FLOORING: Upholstery: Stinson, Fuse, Tangelo	floor	25.25"W 22.25'1'D 33"H	None
OPVI	0700	2	Bookcase/Lateral file combination unit; High Pressure Laminate: Columbian Walnut?	floor	36"w x20"d x68"h	none
OPVI	1500	1	Workstation, Furniture System, Upper & Lower Storage: Laminate-Columbian Walnut; Fabric-Mandarian	floor	Various	E 115V Quads: Data-Comm
OPOI	2941	1	Telephone, Standard Desk: TO BE SPECIFIED BY OWNER	desktop	10"D X 8"W X 4"H	Data-Com
OPVI	3039a	1	Wastebasket, Rectangular, plastic, water/fire resistant,28qt	floor	14lx11wx16h	None
CPCI	3115	1	Robe Hook, Double	wall	6x6x3	None
OPOI	3907	1	Computer With Dual Monitor, Wireless Keyboard & Mouse; TO BE SPECIFIED BY OWNER	desk top	TBD	E 115V; Data

ARCH ROOM NO 3058

ROOM TITLE OFFICE, FACULTY

GROUP	EQNO	QTY	DESCRIPTION	LOCATION	SIZE-STD	UTILITIES
OPVI	0150a	1	Chair, Rotary,Std Mesh Back,5-Legged, HARD CASTERS-SOFT Flooring ,Ergonomic,Adj Arms, Black	floor	28.25"W 25.25"D 42.25”-47”H	None
OPVI	0200a	2	Chair, Desk Side Chair; HARD GLIDES FOR SOFT FLOORING: Upholstery: Stinson, Fuse, Tangelo	floor	25.25"W 22.25'1'D 33"H	None
OPVI	0700	2	Bookcase/Lateral file combination unit; High Pressure Laminate: Columbian Walnut?	floor	36"w x20"d x68"h	none
OPVI	1500	1	Workstation, Furniture System, Upper & Lower Storage: Laminate-Columbian Walnut; Fabric-Mandarian	floor	Various	E 115V Quads: Data-Comm
OPOI	2941	1	Telephone, Standard Desk: TO BE SPECIFIED BY OWNER	desktop	10"D X 8"W X 4"H	Data-Com
OPVI	3039a	1	Wastebasket, Rectangular, plastic, water/fire resistant,28qt	floor	14lx11wx16h	None
CPCI	3115	1	Robe Hook, Double	wall	6x6x3	None
OPOI	3907	1	Computer With Dual Monitor, Wireless Keyboard & Mouse; TO BE SPECIFIED BY OWNER	desk top	TBD	E 115V; Data

ARCH ROOM NO 3059

ROOM TITLE OFFICE, STAFF

GROUP	EQNO	QTY	DESCRIPTION	LOCATION	SIZE-STD	UTILITIES
OPVI	0150a	1	Chair, Rotary,Std Mesh Back,5-Legged, HARD CASTERS-SOFT Flooring ,Ergonomic,Adj Arms, Black	floor	28.25"W 25.25"D 42.25”-47”H	None
OPVI	0200a	1	Chair, Desk Side Chair; HARD GLIDES FOR SOFT FLOORING: Upholstery: Stinson, Fuse, Tangelo	floor	25.25"W 22.25'1'D 33"H	None
OPVI	0700	2	Bookcase/Lateral file combination unit; High Pressure Laminate: Columbian Walnut?	floor	36"w x20"d x68"h	none
OPVI	1500	1	Workstation, Furniture System, Upper & Lower Storage: Laminate-Columbian Walnut; Fabric-Mandarian	floor	Various	E 115V Quads: Data-Comm
OPOI	2941	1	Telephone, Standard Desk: TO BE SPECIFIED BY OWNER	desktop	10"D X 8"W X 4"H	Data-Com
OPVI	3039a	1	Wastebasket, Rectangular, plastic, water/fire resistant,28qt	floor	14lx11wx16h	None
CPCI	3115	1	Robe Hook, Double	wall	6x6x3	None
OPOI	3907	1	Computer With Dual Monitor, Wireless Keyboard & Mouse; TO BE SPECIFIED BY OWNER	desk top	TBD	E 115V; Data

ARCH ROOM NO 3060

ROOM TITLE OFFICE, FACULTY

GROUP	EQNO	QTY	DESCRIPTION	LOCATION	SIZE-STD	UTILITIES
OPVI	0150a	1	Chair, Rotary,Std Mesh Back,5-Legged, HARD CASTERS-SOFT Flooring ,Ergonomic,Adj Arms, Black	floor	28.25"W 25.25"D 42.25”-47”H	None
OPVI	0200a	2	Chair, Desk Side Chair; HARD GLIDES FOR SOFT FLOORING: Upholstery: Stinson, Fuse, Tangelo	floor	25.25"W 22.25'1'D 33"H	None
OPVI	0700	2	Bookcase/Lateral file combination unit; High Pressure Laminate: Columbian Walnut?	floor	36"w x20"d x68"h	none
OPVI	1500	1	Workstation, Furniture System, Upper & Lower Storage: Laminate-Columbian Walnut; Fabric-Mandarian	floor	Various	E 115V Quads: Data-Comm
OPOI	2941	1	Telephone, Standard Desk: TO BE SPECIFIED BY OWNER	desktop	10"D X 8"W X 4"H	Data-Com
OPVI	3039a	1	Wastebasket, Rectangular, plastic, water/fire resistant,28qt	floor	14lx11wx16h	None
CPCI	3115	1	Robe Hook, Double	wall	6x6x3	None
OPOI	3907	1	Computer With Dual Monitor, Wireless Keyboard & Mouse; TO BE SPECIFIED BY OWNER	desk top	TBD	E 115V; Data

ARCH ROOM NO 3061

ROOM TITLE OFFICE, STAFF

GROUP	EQNO	QTY	DESCRIPTION	LOCATION	SIZE-STD	UTILITIES
OPVI	0150a	1	Chair, Rotary,Std Mesh Back,5-Legged, HARD CASTERS-SOFT Flooring ,Ergonomic,Adj Arms, Black	floor	28.25"W 25.25"D 42.25”-47”H	None
OPVI	0200a	1	Chair, Desk Side Chair; HARD GLIDES FOR SOFT FLOORING: Upholstery: Stinson, Fuse, Tangelo	floor	25.25"W 22.25'1'D 33"H	None
OPVI	0700	2	Bookcase/Lateral file combination unit; High Pressure Laminate: Columbian Walnut?	floor	36"w x20"d x68"h	none
OPVI	1500	1	Workstation, Furniture System, Upper & Lower Storage: Laminate-Columbian Walnut; Fabric-Mandarian	floor	Various	E 115V Quads: Data-Comm
OPOI	2941	1	Telephone, Standard Desk: TO BE SPECIFIED BY OWNER	desktop	10"D X 8"W X 4"H	Data-Com
OPVI	3039a	1	Wastebasket, Rectangular, plastic, water/fire resistant,28qt	floor	14lx11wx16h	None
CPCI	3115	1	Robe Hook, Double	wall	6x6x3	None
OPOI	3907	1	Computer With Dual Monitor, Wireless Keyboard & Mouse; TO BE SPECIFIED BY OWNER	desk top	TBD	E 115V; Data

ARCH ROOM NO 3062

ROOM TITLE OFFICE, FACULTY

GROUP	EQNO	QTY	DESCRIPTION	LOCATION	SIZE-STD	UTILITIES
OPVI	0150a	1	Chair, Rotary,Std Mesh Back,5-Legged, HARD CASTERS-SOFT Flooring ,Ergonomic,Adj Arms, Black	floor	28.25"W 25.25"D 42.25”-47”H	None
OPVI	0200a	2	Chair, Desk Side Chair; HARD GLIDES FOR SOFT FLOORING: Upholstery: Stinson, Fuse, Tangelo	floor	25.25"W 22.25'1'D 33"H	None
OPVI	0700	2	Bookcase/Lateral file combination unit; High Pressure Laminate: Columbian Walnut?	floor	36"w x20"d x68"h	none
OPVI	1500	1	Workstation, Furniture System, Upper & Lower Storage: Laminate-Columbian Walnut; Fabric-Mandarian	floor	Various	E 115V Quads: Data-Comm
OPOI	2941	1	Telephone, Standard Desk: TO BE SPECIFIED BY OWNER	desktop	10"D X 8"W X 4"H	Data-Com
OPVI	3039a	1	Wastebasket, Rectangular, plastic, water/fire resistant,28qt	floor	14lx11wx16h	None
CPCI	3115	1	Robe Hook, Double	wall	6x6x3	None
OPOI	3907	1	Computer With Dual Monitor, Wireless Keyboard & Mouse; TO BE SPECIFIED BY OWNER	desk top	TBD	E 115V; Data

ARCH ROOM NO 3063

ROOM TITLE OFFICE, STAFF

GROUP	EQNO	QTY	DESCRIPTION	LOCATION	SIZE-STD	UTILITIES
OPVI	0150a	1	Chair, Rotary,Std Mesh Back,5-Legged, HARD CASTERS-SOFT Flooring ,Ergonomic,Adj Arms, Black	floor	28.25"W 25.25"D 42.25”-47”H	None
OPVI	0200a	1	Chair, Desk Side Chair; HARD GLIDES FOR SOFT FLOORING: Upholstery: Stinson, Fuse, Tangelo	floor	25.25"W 22.25'1'D 33"H	None
OPVI	0700	2	Bookcase/Lateral file combination unit; High Pressure Laminate: Columbian Walnut?	floor	36"w x20"d x68"h	none
OPVI	1500	1	Workstation, Furniture System, Upper & Lower Storage: Laminate-Columbian Walnut; Fabric-Mandarian	floor	Various	E 115V Quads: Data-Comm
OPOI	2941	1	Telephone, Standard Desk: TO BE SPECIFIED BY OWNER	desktop	10"D X 8"W X 4"H	Data-Com
OPVI	3039a	1	Wastebasket, Rectangular, plastic, water/fire resistant,28qt	floor	14lx11wx16h	None
CPCI	3115	1	Robe Hook, Double	wall	6x6x3	None
OPOI	3907	1	Computer With Dual Monitor, Wireless Keyboard & Mouse; TO BE SPECIFIED BY OWNER	desk top	TBD	E 115V; Data

ARCH ROOM NO 3064

ROOM TITLE OFFICE, STAFF

GROUP	EQNO	QTY	DESCRIPTION	LOCATION	SIZE-STD	UTILITIES
OPVI	0150a	1	Chair, Rotary,Std Mesh Back,5-Legged, HARD CASTERS-SOFT Flooring ,Ergonomic,Adj Arms, Black	floor	28.25"W 25.25"D 42.25”-47”H	None
OPVI	0200a	1	Chair, Desk Side Chair; HARD GLIDES FOR SOFT FLOORING: Upholstery: Stinson, Fuse, Tangelo	floor	25.25"W 22.25'1'D 33"H	None
OPVI	0700	2	Bookcase/Lateral file combination unit; High Pressure Laminate: Columbian Walnut?	floor	36"w x20"d x68"h	none
OPVI	1500	1	Workstation, Furniture System, Upper & Lower Storage: Laminate-Columbian Walnut; Fabric-Mandarian	floor	Various	E 115V Quads: Data-Comm
OPOI	2941	1	Telephone, Standard Desk: TO BE SPECIFIED BY OWNER	desktop	10"D X 8"W X 4"H	Data-Com
OPVI	3039a	1	Wastebasket, Rectangular, plastic, water/fire resistant,28qt	floor	14lx11wx16h	None
CPCI	3115	1	Robe Hook, Double	wall	6x6x3	None
OPOI	3907	1	Computer With Dual Monitor, Wireless Keyboard & Mouse; TO BE SPECIFIED BY OWNER	desk top	TBD	E 115V; Data

ARCH ROOM NO 3065

ROOM TITLE OFFICE, FACULTY

GROUP	EQNO	QTY	DESCRIPTION	LOCATION	SIZE-STD	UTILITIES
OPVI	0150a	1	Chair, Rotary,Std Mesh Back,5-Legged, HARD CASTERS-SOFT Flooring ,Ergonomic,Adj Arms, Black	floor	28.25"W 25.25"D 42.25”-47”H	None
OPVI	0200a	2	Chair, Desk Side Chair; HARD GLIDES FOR SOFT FLOORING: Upholstery: Stinson, Fuse, Tangelo	floor	25.25"W 22.25'1'D 33"H	None
OPVI	0700	2	Bookcase/Lateral file combination unit; High Pressure Laminate: Columbian Walnut?	floor	36"w x20"d x68"h	none
OPVI	1500	1	Workstation, Furniture System, Upper & Lower Storage: Laminate-Columbian Walnut; Fabric-Mandarian	floor	Various	E 115V Quads: Data-Comm
OPOI	2941	1	Telephone, Standard Desk: TO BE SPECIFIED BY OWNER	desktop	10"D X 8"W X 4"H	Data-Com
OPVI	3039a	1	Wastebasket, Rectangular, plastic, water/fire resistant,28qt	floor	14lx11wx16h	None
CPCI	3115	1	Robe Hook, Double	wall	6x6x3	None
OPOI	3907	1	Computer With Dual Monitor, Wireless Keyboard & Mouse; TO BE SPECIFIED BY OWNER	desk top	TBD	E 115V; Data

ARCH ROOM NO 3066

ROOM TITLE OFFICE, STAFF

GROUP	EQNO	QTY	DESCRIPTION	LOCATION	SIZE-STD	UTILITIES
OPVI	0150a	1	Chair, Rotary,Std Mesh Back,5-Legged, HARD CASTERS-SOFT Flooring ,Ergonomic,Adj Arms, Black	floor	28.25"W 25.25"D 42.25”-47”H	None
OPVI	0200a	1	Chair, Desk Side Chair; HARD GLIDES FOR SOFT FLOORING: Upholstery: Stinson, Fuse, Tangelo	floor	25.25"W 22.25'1'D 33"H	None
OPVI	0700	2	Bookcase/Lateral file combination unit; High Pressure Laminate: Columbian Walnut?	floor	36"w x20"d x68"h	none
OPVI	1500	1	Workstation, Furniture System, Upper & Lower Storage: Laminate-Columbian Walnut; Fabric-Mandarian	floor	Various	E 115V Quads: Data-Comm
OPOI	2941	1	Telephone, Standard Desk: TO BE SPECIFIED BY OWNER	desktop	10"D X 8"W X 4"H	Data-Com
OPVI	3039a	1	Wastebasket, Rectangular, plastic, water/fire resistant,28qt	floor	14lx11wx16h	None
CPCI	3115	1	Robe Hook, Double	wall	6x6x3	None
OPOI	3907	1	Computer With Dual Monitor, Wireless Keyboard & Mouse; TO BE SPECIFIED BY OWNER	desk top	TBD	E 115V; Data

ARCH ROOM NO 3067

ROOM TITLE OFFICE, FACULTY

GROUP	EQNO	QTY	DESCRIPTION	LOCATION	SIZE-STD	UTILITIES
OPVI	0150a	1	Chair, Rotary,Std Mesh Back,5-Legged, HARD CASTERS-SOFT Flooring ,Ergonomic,Adj Arms, Black	floor	28.25"W 25.25"D 42.25”-47”H	None
OPVI	0200a	2	Chair, Desk Side Chair; HARD GLIDES FOR SOFT FLOORING: Upholstery: Stinson, Fuse, Tangelo	floor	25.25"W 22.25'1'D 33"H	None
OPVI	0700	2	Bookcase/Lateral file combination unit; High Pressure Laminate: Columbian Walnut?	floor	36"w x20"d x68"h	none
OPVI	1500	1	Workstation, Furniture System, Upper & Lower Storage: Laminate-Columbian Walnut; Fabric-Mandarian	floor	Various	E 115V Quads: Data-Comm
OPOI	2941	1	Telephone, Standard Desk: TO BE SPECIFIED BY OWNER	desktop	10"D X 8"W X 4"H	Data-Com
OPVI	3039a	1	Wastebasket, Rectangular, plastic, water/fire resistant,28qt	floor	14lx11wx16h	None
CPCI	3115	1	Robe Hook, Double	wall	6x6x3	None
OPOI	3907	1	Computer With Dual Monitor, Wireless Keyboard & Mouse; TO BE SPECIFIED BY OWNER	desk top	TBD	E 115V; Data

ARCH ROOM NO 3069

ROOM TITLE OFFICE, STAFF

GROUP	EQNO	QTY	DESCRIPTION	LOCATION	SIZE-STD	UTILITIES
OPVI	0150a	1	Chair, Rotary,Std Mesh Back,5-Legged, HARD CASTERS-SOFT Flooring ,Ergonomic,Adj Arms, Black	floor	28.25"W 25.25"D 42.25”-47”H	None
OPVI	0200a	1	Chair, Desk Side Chair; HARD GLIDES FOR SOFT FLOORING: Upholstery: Stinson, Fuse, Tangelo	floor	25.25"W 22.25'1'D 33"H	None
OPVI	0700	2	Bookcase/Lateral file combination unit; High Pressure Laminate: Columbian Walnut?	floor	36"w x20"d x68"h	none
OPVI	1500	1	Workstation, Furniture System, Upper & Lower Storage: Laminate-Columbian Walnut; Fabric-Mandarian	floor	Various	E 115V Quads: Data-Comm
OPOI	2941	1	Telephone, Standard Desk: TO BE SPECIFIED BY OWNER	desktop	10"D X 8"W X 4"H	Data-Com
OPVI	3039a	1	Wastebasket, Rectangular, plastic, water/fire resistant,28qt	floor	14lx11wx16h	None
CPCI	3115	1	Robe Hook, Double	wall	6x6x3	None
OPOI	3907	1	Computer With Dual Monitor, Wireless Keyboard & Mouse; TO BE SPECIFIED BY OWNER	desk top	TBD	E 115V; Data

ARCH ROOM NO 3070

ROOM TITLE OFFICE, FACULTY

GROUP	EQNO	QTY	DESCRIPTION	LOCATION	SIZE-STD	UTILITIES
OPVI	0150a	1	Chair, Rotary,Std Mesh Back,5-Legged, HARD CASTERS-SOFT Flooring ,Ergonomic,Adj Arms, Black	floor	28.25"W 25.25"D 42.25”-47”H	None
OPVI	0200a	2	Chair, Desk Side Chair; HARD GLIDES FOR SOFT FLOORING: Upholstery: Stinson, Fuse, Tangelo	floor	25.25"W 22.25'1'D 33"H	None
OPVI	0700	2	Bookcase/Lateral file combination unit; High Pressure Laminate: Columbian Walnut?	floor	36"w x20"d x68"h	none
OPVI	1500	1	Workstation, Furniture System, Upper & Lower Storage: Laminate-Columbian Walnut; Fabric-Mandarian	floor	Various	E 115V Quads: Data-Comm
OPOI	2941	1	Telephone, Standard Desk: TO BE SPECIFIED BY OWNER	desktop	10"D X 8"W X 4"H	Data-Com
OPVI	3039a	1	Wastebasket, Rectangular, plastic, water/fire resistant,28qt	floor	14lx11wx16h	None
CPCI	3115	1	Robe Hook, Double	wall	6x6x3	None
OPOI	3907	1	Computer With Dual Monitor, Wireless Keyboard & Mouse; TO BE SPECIFIED BY OWNER	desk top	TBD	E 115V; Data

ARCH ROOM NO 3071

ROOM TITLE OFFICE, STAFF

GROUP	EQNO	QTY	DESCRIPTION	LOCATION	SIZE-STD	UTILITIES
OPVI	0150a	1	Chair, Rotary,Std Mesh Back,5-Legged, HARD CASTERS-SOFT Flooring ,Ergonomic,Adj Arms, Black	floor	28.25"W 25.25"D 42.25”-47”H	None
OPVI	0200a	1	Chair, Desk Side Chair; HARD GLIDES FOR SOFT FLOORING: Upholstery: Stinson, Fuse, Tangelo	floor	25.25"W 22.25'1'D 33"H	None
OPVI	0700	2	Bookcase/Lateral file combination unit; High Pressure Laminate: Columbian Walnut?	floor	36"w x20"d x68"h	none
OPVI	1500	1	Workstation, Furniture System, Upper & Lower Storage: Laminate-Columbian Walnut; Fabric-Mandarian	floor	Various	E 115V Quads: Data-Comm
OPOI	2941	1	Telephone, Standard Desk: TO BE SPECIFIED BY OWNER	desktop	10"D X 8"W X 4"H	Data-Com
OPVI	3039a	1	Wastebasket, Rectangular, plastic, water/fire resistant,28qt	floor	14lx11wx16h	None
CPCI	3115	1	Robe Hook, Double	wall	6x6x3	None
OPOI	3907	1	Computer With Dual Monitor, Wireless Keyboard & Mouse; TO BE SPECIFIED BY OWNER	desk top	TBD	E 115V; Data

ARCH ROOM NO 3072

ROOM TITLE OFFICE, FACULTY

GROUP	EQNO	QTY	DESCRIPTION	LOCATION	SIZE-STD	UTILITIES
OPVI	0150a	1	Chair, Rotary,Std Mesh Back,5-Legged, HARD CASTERS-SOFT Flooring ,Ergonomic,Adj Arms, Black	floor	28.25"W 25.25"D 42.25”-47”H	None
OPVI	0200a	2	Chair, Desk Side Chair; HARD GLIDES FOR SOFT FLOORING: Upholstery: Stinson, Fuse, Tangelo	floor	25.25"W 22.25'1'D 33"H	None
OPVI	0700	2	Bookcase/Lateral file combination unit; High Pressure Laminate: Columbian Walnut?	floor	36"w x20"d x68"h	none
OPVI	1500	1	Workstation, Furniture System, Upper & Lower Storage: Laminate-Columbian Walnut; Fabric-Mandarian	floor	Various	E 115V Quads: Data-Comm
OPOI	2941	1	Telephone, Standard Desk: TO BE SPECIFIED BY OWNER	desktop	10"D X 8"W X 4"H	Data-Com
OPVI	3039a	1	Wastebasket, Rectangular, plastic, water/fire resistant,28qt	floor	14lx11wx16h	None
CPCI	3115	1	Robe Hook, Double	wall	6x6x3	None
OPOI	3907	1	Computer With Dual Monitor, Wireless Keyboard & Mouse; TO BE SPECIFIED BY OWNER	desk top	TBD	E 115V; Data

ARCH ROOM NO 3073

ROOM TITLE OFFICE, FACULTY

GROUP	EQNO	QTY	DESCRIPTION	LOCATION	SIZE-STD	UTILITIES
OPVI	0150a	1	Chair, Rotary,Std Mesh Back,5-Legged, HARD CASTERS-SOFT Flooring ,Ergonomic,Adj Arms, Black	floor	28.25"W 25.25"D 42.25”-47”H	None
OPVI	0200a	2	Chair, Desk Side Chair; HARD GLIDES FOR SOFT FLOORING: Upholstery: Stinson, Fuse, Tangelo	floor	25.25"W 22.25'1'D 33"H	None
OPVI	0700	2	Bookcase/Lateral file combination unit; High Pressure Laminate: Columbian Walnut?	floor	36"w x20"d x68"h	none
OPVI	1500	1	Workstation, Furniture System, Upper & Lower Storage: Laminate-Columbian Walnut; Fabric-Mandarian	floor	Various	E 115V Quads: Data-Comm
OPOI	2941	1	Telephone, Standard Desk: TO BE SPECIFIED BY OWNER	desktop	10"D X 8"W X 4"H	Data-Com
OPVI	3039a	1	Wastebasket, Rectangular, plastic, water/fire resistant,28qt	floor	14lx11wx16h	None
CPCI	3115	1	Robe Hook, Double	wall	6x6x3	None
OPOI	3907	1	Computer With Dual Monitor, Wireless Keyboard & Mouse; TO BE SPECIFIED BY OWNER	desk top	TBD	E 115V; Data

ARCH ROOM NO 3074

ROOM TITLE OFFICE, FACULTY

GROUP	EQNO	QTY	DESCRIPTION	LOCATION	SIZE-STD	UTILITIES
OPVI	0150a	1	Chair, Rotary,Std Mesh Back,5-Legged, HARD CASTERS-SOFT Flooring ,Ergonomic,Adj Arms, Black	floor	28.25"W 25.25"D 42.25”-47”H	None
OPVI	0200a	2	Chair, Desk Side Chair; HARD GLIDES FOR SOFT FLOORING: Upholstery: Stinson, Fuse, Tangelo	floor	25.25"W 22.25'1'D 33"H	None
OPVI	0700	2	Bookcase/Lateral file combination unit; High Pressure Laminate: Columbian Walnut?	floor	36"w x20"d x68"h	none
OPVI	1500	1	Workstation, Furniture System, Upper & Lower Storage: Laminate-Columbian Walnut; Fabric-Mandarian	floor	Various	E 115V Quads: Data-Comm
OPOI	2941	1	Telephone, Standard Desk: TO BE SPECIFIED BY OWNER	desktop	10"D X 8"W X 4"H	Data-Com
OPVI	3039a	1	Wastebasket, Rectangular, plastic, water/fire resistant,28qt	floor	14lx11wx16h	None
CPCI	3115	1	Robe Hook, Double	wall	6x6x3	None
OPOI	3907	1	Computer With Dual Monitor, Wireless Keyboard & Mouse; TO BE SPECIFIED BY OWNER	desk top	TBD	E 115V; Data

ARCH ROOM NO 3075

ROOM TITLE OFFICE, SHARED (2 STAFF)

GROUP	EQNO	QTY	DESCRIPTION	LOCATION	SIZE-STD	UTILITIES
OPVI	0150a	2	Chair, Rotary,Std Mesh Back,5-Legged, HARD CASTERS-SOFT Flooring ,Ergonomic,Adj Arms, Black	floor	28.25"W 25.25"D 42.25”-47”H	None
OPVI	0200a	1	Chair, Desk Side Chair; HARD GLIDES FOR SOFT FLOORING: Upholstery: Stinson, Fuse, Tangelo	floor	25.25"W 22.25'1'D 33"H	None
OPVI	1079	1	Desk, Single Pedestal, Pencil/Storage/File Drawer	floor	72"l x 30"d x 30"h	None
OPVI	1500	1	Workstation, Furniture System, Upper & Lower Storage: Laminate-Columbian Walnut; Fabric-Mandarian	floor	Various	E 115V Quads: Data-Comm
OPOI	2941	2	Telephone, Standard Desk: TO BE SPECIFIED BY OWNER	desktop	10"D X 8"W X 4"H	Data-Com
OPVI	3039a	2	Wastebasket, Rectangular, plastic, water/fire resistant,28qt	floor	14lx11wx16h	None
CPCI	3115	1	Robe Hook, Double	wall	6x6x3	None
OPOI	3907	2	Computer With Dual Monitor, Wireless Keyboard & Mouse; TO BE SPECIFIED BY OWNER	desk top	TBD	E 115V; Data

ARCH ROOM NO 3076

ROOM TITLE OFFICE, SHARED (2 STAFF)

GROUP	EQNO	QTY	DESCRIPTION	LOCATION	SIZE-STD	UTILITIES
OPVI	0150a	2	Chair, Rotary,Std Mesh Back,5-Legged, HARD CASTERS-SOFT Flooring ,Ergonomic,Adj Arms, Black	floor	28.25"W 25.25"D 42.25”-47”H	None
OPVI	0200a	1	Chair, Desk Side Chair; HARD GLIDES FOR SOFT FLOORING: Upholstery: Stinson, Fuse, Tangelo	floor	25.25"W 22.25'1'D 33"H	None
OPVI	1500	2	Workstation, Furniture System, Upper & Lower Storage: Laminate-Columbian Walnut; Fabric-Mandarian	floor	Various	E 115V Quads: Data-Comm
OPOI	2941	2	Telephone, Standard Desk: TO BE SPECIFIED BY OWNER	desktop	10"D X 8"W X 4"H	Data-Com
OPVI	3039a	2	Wastebasket, Rectangular, plastic, water/fire resistant,28qt	floor	14lx11wx16h	None
OPOI	3907	2	Computer With Dual Monitor, Wireless Keyboard & Mouse; TO BE SPECIFIED BY OWNER	desk top	TBD	E 115V; Data

ARCH ROOM NO 3077

ROOM TITLE OFFICE, FACULTY

GROUP	EQNO	QTY	DESCRIPTION	LOCATION	SIZE-STD	UTILITIES
OPVI	0150a	1	Chair, Rotary,Std Mesh Back,5-Legged, HARD CASTERS-SOFT Flooring ,Ergonomic,Adj Arms, Black	floor	28.25"W 25.25"D 42.25”-47”H	None
OPVI	0200a	2	Chair, Desk Side Chair; HARD GLIDES FOR SOFT FLOORING: Upholstery: Stinson, Fuse, Tangelo	floor	25.25"W 22.25'1'D 33"H	None
OPVI	0700	2	Bookcase/Lateral file combination unit; High Pressure Laminate: Columbian Walnut?	floor	36"w x20"d x68"h	none
OPVI	1500	1	Workstation, Furniture System, Upper & Lower Storage: Laminate-Columbian Walnut; Fabric-Mandarian	floor	Various	E 115V Quads: Data-Comm
OPOI	2941	1	Telephone, Standard Desk: TO BE SPECIFIED BY OWNER	desktop	10"D X 8"W X 4"H	Data-Com
OPVI	3039a	1	Wastebasket, Rectangular, plastic, water/fire resistant,28qt	floor	14lx11wx16h	None
CPCI	3115	1	Robe Hook, Double	wall	6x6x3	None
OPOI	3907	1	Computer With Dual Monitor, Wireless Keyboard & Mouse; TO BE SPECIFIED BY OWNER	desk top	TBD	E 115V; Data

ARCH ROOM NO 3078

ROOM TITLE OFFICE, STAFF

GROUP	EQNO	QTY	DESCRIPTION	LOCATION	SIZE-STD	UTILITIES

OPVI	0150a	1	Chair, Rotary,Std Mesh Back,5-Legged, HARD CASTERS-SOFT Flooring ,Ergonomic,Adj Arms, Black	floor	28.25"W 25.25"D 42.25”-47”H	None
OPVI	0200a	1	Chair, Desk Side Chair; HARD GLIDES FOR SOFT FLOORING: Upholstery: Stinson, Fuse, Tangelo	floor	25.25"W 22.25'1'D 33"H	None
OPVI	0700	2	Bookcase/Lateral file combination unit; High Pressure Laminate: Columbian Walnut?	floor	36"w x20"d x68"h	none
OPVI	1500	1	Workstation, Furniture System, Upper & Lower Storage: Laminate-Columbian Walnut; Fabric-Mandarian	floor	Various	E 115V Quads: Data-Comm
OPOI	2941	1	Telephone, Standard Desk: TO BE SPECIFIED BY OWNER	desktop	10"D X 8"W X 4"H	Data-Com
OPVI	3039a	1	Wastebasket, Rectangular, plastic, water/fire resistant,28qt	floor	14lx11wx16h	None
CPCI	3115	1	Robe Hook, Double	wall	6x6x3	None
OPOI	3907	1	Computer With Dual Monitor, Wireless Keyboard & Mouse; TO BE SPECIFIED BY OWNER	desk top	TBD	E 115V; Data

ARCH ROOM NO **3079**

ROOM TITLE **OFFICE, FACULTY**

GROUP	EQNO	QTY	DESCRIPTION	LOCATION	SIZE-STD	UTILITIES
OPVI	0150a	1	Chair, Rotary,Std Mesh Back,5-Legged, HARD CASTERS-SOFT Flooring ,Ergonomic,Adj Arms, Black	floor	28.25"W 25.25"D 42.25”-47”H	None
OPVI	0200a	2	Chair, Desk Side Chair; HARD GLIDES FOR SOFT FLOORING: Upholstery: Stinson, Fuse, Tangelo	floor	25.25"W 22.25'1'D 33"H	None
OPVI	0700	2	Bookcase/Lateral file combination unit; High Pressure Laminate: Columbian Walnut?	floor	36"w x20"d x68"h	none
OPVI	1500	1	Workstation, Furniture System, Upper & Lower Storage: Laminate-Columbian Walnut; Fabric-Mandarian	floor	Various	E 115V Quads: Data-Comm
OPOI	2941	1	Telephone, Standard Desk: TO BE SPECIFIED BY OWNER	desktop	10"D X 8"W X 4"H	Data-Com
OPVI	3039a	1	Wastebasket, Rectangular, plastic, water/fire resistant,28qt	floor	14lx11wx16h	None
CPCI	3115	1	Robe Hook, Double	wall	6x6x3	None
OPOI	3907	1	Computer With Dual Monitor, Wireless Keyboard & Mouse; TO BE SPECIFIED BY OWNER	desk top	TBD	E 115V; Data

ARCH ROOM NO **3080**

ROOM TITLE **OFFICE, STAFF**

GROUP	EQNO	QTY	DESCRIPTION	LOCATION	SIZE-STD	UTILITIES

OPVI	0150a	1	Chair, Rotary,Std Mesh Back,5-Legged, HARD CASTERS-SOFT Flooring ,Ergonomic,Adj Arms, Black	floor	28.25"W 25.25"D 42.25”-47”H	None
OPVI	0200a	1	Chair, Desk Side Chair; HARD GLIDES FOR SOFT FLOORING: Upholstery: Stinson, Fuse, Tangelo	floor	25.25"W 22.25'1'D 33"H	None
OPVI	0700	2	Bookcase/Lateral file combination unit; High Pressure Laminate: Columbian Walnut?	floor	36"w x20"d x68"h	none
OPVI	1500	1	Workstation, Furniture System, Upper & Lower Storage: Laminate-Columbian Walnut; Fabric-Mandarian	floor	Various	E 115V Quads: Data-Comm
OPOI	2941	1	Telephone, Standard Desk: TO BE SPECIFIED BY OWNER	desktop	10"D X 8"W X 4"H	Data-Com
OPVI	3039a	1	Wastebasket, Rectangular, plastic, water/fire resistant,28qt	floor	14lx11wx16h	None
CPCI	3115	1	Robe Hook, Double	wall	6x6x3	None
OPOI	3907	1	Computer With Dual Monitor, Wireless Keyboard & Mouse; TO BE SPECIFIED BY OWNER	desk top	TBD	E 115V; Data

ARCH ROOM NO **3081**

ROOM TITLE **OFFICE, FACULTY**

GROUP	EQNO	QTY	DESCRIPTION	LOCATION	SIZE-STD	UTILITIES
OPVI	0150a	1	Chair, Rotary,Std Mesh Back,5-Legged, HARD CASTERS-SOFT Flooring ,Ergonomic,Adj Arms, Black	floor	28.25"W 25.25"D 42.25”-47”H	None
OPVI	0200a	2	Chair, Desk Side Chair; HARD GLIDES FOR SOFT FLOORING: Upholstery: Stinson, Fuse, Tangelo	floor	25.25"W 22.25'1'D 33"H	None
OPVI	0700	2	Bookcase/Lateral file combination unit; High Pressure Laminate: Columbian Walnut?	floor	36"w x20"d x68"h	none
OPVI	1500	1	Workstation, Furniture System, Upper & Lower Storage: Laminate-Columbian Walnut; Fabric-Mandarian	floor	Various	E 115V Quads: Data-Comm
OPOI	2941	1	Telephone, Standard Desk: TO BE SPECIFIED BY OWNER	desktop	10"D X 8"W X 4"H	Data-Com
OPVI	3039a	1	Wastebasket, Rectangular, plastic, water/fire resistant,28qt	floor	14lx11wx16h	None
CPCI	3115	1	Robe Hook, Double	wall	6x6x3	None
OPOI	3907	1	Computer With Dual Monitor, Wireless Keyboard & Mouse; TO BE SPECIFIED BY OWNER	desk top	TBD	E 115V; Data

ARCH ROOM NO **3082**

ROOM TITLE **OFFICE, STAFF**

GROUP	EQNO	QTY	DESCRIPTION	LOCATION	SIZE-STD	UTILITIES

OPVI	0150a	1	Chair, Rotary,Std Mesh Back,5-Legged, HARD CASTERS-SOFT Flooring ,Ergonomic,Adj Arms, Black	floor	28.25"W 25.25"D 42.25”-47”H	None
OPVI	0200a	1	Chair, Desk Side Chair; HARD GLIDES FOR SOFT FLOORING: Upholstery: Stinson, Fuse, Tangelo	floor	25.25"W 22.25'1'D 33"H	None
OPVI	0700	2	Bookcase/Lateral file combination unit; High Pressure Laminate: Columbian Walnut?	floor	36"w x20"d x68"h	none
OPVI	1500	1	Workstation, Furniture System, Upper & Lower Storage: Laminate-Columbian Walnut; Fabric-Mandarian	floor	Various	E 115V Quads: Data-Comm
OPOI	2941	1	Telephone, Standard Desk: TO BE SPECIFIED BY OWNER	desktop	10"D X 8"W X 4"H	Data-Com
OPVI	3039a	1	Wastebasket, Rectangular, plastic, water/fire resistant,28qt	floor	14lx11wx16h	None
CPCI	3115	1	Robe Hook, Double	wall	6x6x3	None
OPOI	3907	1	Computer With Dual Monitor, Wireless Keyboard & Mouse; TO BE SPECIFIED BY OWNER	desk top	TBD	E 115V; Data

ARCH ROOM NO **3083**

ROOM TITLE **OFFICE, STAFF**

GROUP	EQNO	QTY	DESCRIPTION	LOCATION	SIZE-STD	UTILITIES
OPVI	0150a	1	Chair, Rotary,Std Mesh Back,5-Legged, HARD CASTERS-SOFT Flooring ,Ergonomic,Adj Arms, Black	floor	28.25"W 25.25"D 42.25”-47”H	None
OPVI	0200a	1	Chair, Desk Side Chair; HARD GLIDES FOR SOFT FLOORING: Upholstery: Stinson, Fuse, Tangelo	floor	25.25"W 22.25'1'D 33"H	None
OPVI	0700	2	Bookcase/Lateral file combination unit; High Pressure Laminate: Columbian Walnut?	floor	36"w x20"d x68"h	none
OPVI	1500	1	Workstation, Furniture System, Upper & Lower Storage: Laminate-Columbian Walnut; Fabric-Mandarian	floor	Various	E 115V Quads: Data-Comm
OPOI	2941	1	Telephone, Standard Desk: TO BE SPECIFIED BY OWNER	desktop	10"D X 8"W X 4"H	Data-Com
OPVI	3039a	1	Wastebasket, Rectangular, plastic, water/fire resistant,28qt	floor	14lx11wx16h	None
CPCI	3115	1	Robe Hook, Double	wall	6x6x3	None
OPOI	3907	1	Computer With Dual Monitor, Wireless Keyboard & Mouse; TO BE SPECIFIED BY OWNER	desk top	TBD	E 115V; Data

ARCH ROOM NO **3084**

ROOM TITLE **OFFICE, STAFF**

GROUP	EQNO	QTY	DESCRIPTION	LOCATION	SIZE-STD	UTILITIES

OPVI	0150a	1	Chair, Rotary,Std Mesh Back,5-Legged, HARD CASTERS-SOFT Flooring ,Ergonomic,Adj Arms, Black	floor	28.25"W 25.25"D 42.25”-47”H	None
OPVI	0200a	1	Chair, Desk Side Chair; HARD GLIDES FOR SOFT FLOORING: Upholstery: Stinson, Fuse, Tangelo	floor	25.25"W 22.25'1'D 33"H	None
OPVI	0700	2	Bookcase/Lateral file combination unit; High Pressure Laminate: Columbian Walnut?	floor	36"w x20"d x68"h	none
OPVI	1500	1	Workstation, Furniture System, Upper & Lower Storage: Laminate-Columbian Walnut; Fabric-Mandarian	floor	Various	E 115V Quads: Data-Comm
OPOI	2941	1	Telephone, Standard Desk: TO BE SPECIFIED BY OWNER	desktop	10"D X 8"W X 4"H	Data-Com
OPVI	3039a	1	Wastebasket, Rectangular, plastic, water/fire resistant,28qt	floor	14lx11wx16h	None
CPCI	3115	1	Robe Hook, Double	wall	6x6x3	None
OPOI	3907	1	Computer With Dual Monitor, Wireless Keyboard & Mouse; TO BE SPECIFIED BY OWNER	desk top	TBD	E 115V; Data

ARCH ROOM NO **3085**

ROOM TITLE **OFFICE, STAFF**

GROUP	EQNO	QTY	DESCRIPTION	LOCATION	SIZE-STD	UTILITIES
OPVI	0150a	1	Chair, Rotary,Std Mesh Back,5-Legged, HARD CASTERS-SOFT Flooring ,Ergonomic,Adj Arms, Black	floor	28.25"W 25.25"D 42.25”-47”H	None
OPVI	0200a	1	Chair, Desk Side Chair; HARD GLIDES FOR SOFT FLOORING: Upholstery: Stinson, Fuse, Tangelo	floor	25.25"W 22.25'1'D 33"H	None
OPVI	0700	2	Bookcase/Lateral file combination unit; High Pressure Laminate: Columbian Walnut?	floor	36"w x20"d x68"h	none
OPVI	1500	1	Workstation, Furniture System, Upper & Lower Storage: Laminate-Columbian Walnut; Fabric-Mandarian	floor	Various	E 115V Quads: Data-Comm
OPOI	2941	1	Telephone, Standard Desk: TO BE SPECIFIED BY OWNER	desktop	10"D X 8"W X 4"H	Data-Com
OPVI	3039a	1	Wastebasket, Rectangular, plastic, water/fire resistant,28qt	floor	14lx11wx16h	None
CPCI	3115	1	Robe Hook, Double	wall	6x6x3	None
OPOI	3907	1	Computer With Dual Monitor, Wireless Keyboard & Mouse; TO BE SPECIFIED BY OWNER	desk top	TBD	E 115V; Data

ARCH ROOM NO **3086**

ROOM TITLE **OFFICE, CSI 1**

GROUP	EQNO	QTY	DESCRIPTION	LOCATION	SIZE-STD	UTILITIES

OPVI	0150a	1	Chair, Rotary,Std Mesh Back,5-Legged, HARD CASTERS-SOFT Flooring ,Ergonomic,Adj Arms, Black	floor	28.25"W 25.25"D 42.25”-47”H	None
OPVI	0200a	1	Chair, Desk Side Chair; HARD GLIDES FOR SOFT FLOORING: Upholstery: Stinson, Fuse, Tangelo	floor	25.25"W 22.25'1'D 33"H	None
OPVI	0700	2	Bookcase/Lateral file combination unit; High Pressure Laminate: Columbian Walnut?	floor	36"w x20"d x68"h	none
OPVI	1500	1	Workstation, Furniture System, Upper & Lower Storage: Laminate-Columbian Walnut; Fabric-Mandarian	floor	Various	E 115V Quads: Data-Comm
OPOI	2941	1	Telephone, Standard Desk: TO BE SPECIFIED BY OWNER	desktop	10"D X 8"W X 4"H	Data-Com
OPVI	3039a	1	Wastebasket, Rectangular, plastic, water/fire resistant,28qt	floor	14lx11wx16h	None
CPCI	3115	1	Robe Hook, Double	wall	6x6x3	None
OPOI	3907	1	Computer With Dual Monitor, Wireless Keyboard & Mouse; TO BE SPECIFIED BY OWNER	desk top	TBD	E 115V; Data

ARCH ROOM NO **3089**

ROOM TITLE **OFFICE, CSI 2**

GROUP	EQNO	QTY	DESCRIPTION	LOCATION	SIZE-STD	UTILITIES
OPVI	0150a	1	Chair, Rotary,Std Mesh Back,5-Legged, HARD CASTERS-SOFT Flooring ,Ergonomic,Adj Arms, Black	floor	28.25"W 25.25"D 42.25”-47”H	None
OPVI	0200a	1	Chair, Desk Side Chair; HARD GLIDES FOR SOFT FLOORING: Upholstery: Stinson, Fuse, Tangelo	floor	25.25"W 22.25'1'D 33"H	None
OPVI	0700	2	Bookcase/Lateral file combination unit; High Pressure Laminate: Columbian Walnut?	floor	36"w x20"d x68"h	none
OPVI	1500	1	Workstation, Furniture System, Upper & Lower Storage: Laminate-Columbian Walnut; Fabric-Mandarian	floor	Various	E 115V Quads: Data-Comm
OPOI	2941	1	Telephone, Standard Desk: TO BE SPECIFIED BY OWNER	desktop	10"D X 8"W X 4"H	Data-Com
OPVI	3039a	1	Wastebasket, Rectangular, plastic, water/fire resistant,28qt	floor	14lx11wx16h	None
CPCI	3115	1	Robe Hook, Double	wall	6x6x3	None
OPOI	3907	1	Computer With Dual Monitor, Wireless Keyboard & Mouse; TO BE SPECIFIED BY OWNER	desk top	TBD	E 115V; Data

ARCH ROOM NO **3090**

ROOM TITLE **OFFICE, CSI 3**

GROUP	EQNO	QTY	DESCRIPTION	LOCATION	SIZE-STD	UTILITIES

OPVI	0150a	1	Chair, Rotary,Std Mesh Back,5-Legged, HARD CASTERS-SOFT Flooring ,Ergonomic,Adj Arms, Black	floor	28.25"W 25.25"D 42.25”-47”H	None
OPVI	0200a	1	Chair, Desk Side Chair; HARD GLIDES FOR SOFT FLOORING: Upholstery: Stinson, Fuse, Tangelo	floor	25.25"W 22.25'1'D 33"H	None
OPVI	0700	2	Bookcase/Lateral file combination unit; High Pressure Laminate: Columbian Walnut?	floor	36"w x20"d x68"h	none
OPVI	1500	1	Workstation, Furniture System, Upper & Lower Storage: Laminate-Columbian Walnut; Fabric-Mandarian	floor	Various	E 115V Quads: Data-Comm
OPOI	2941	1	Telephone, Standard Desk: TO BE SPECIFIED BY OWNER	desktop	10"D X 8"W X 4"H	Data-Com
OPVI	3039a	1	Wastebasket, Rectangular, plastic, water/fire resistant,28qt	floor	14lx11wx16h	None
CPCI	3115	1	Robe Hook, Double	wall	6x6x3	None
OPOI	3907	1	Computer With Dual Monitor, Wireless Keyboard & Mouse; TO BE SPECIFIED BY OWNER	desk top	TBD	E 115V; Data

ARCH ROOM NO **3091**

ROOM TITLE **CONFERENCE, RH & CSI**

GROUP	EQNO	QTY	DESCRIPTION	LOCATION	SIZE-STD	UTILITIES
OPVI	0211a	6	Chair, Conference Type, w/arms; Hard Casters for Soft Flooring, w/arms; Momentum Bravo II & Black	floor	25.5”W X 25.25”D X 41.75”H – 46.5”H	None
CPCI	1054	1	Clock System, Synchronized; Analogue, With Second Hand; Sized Appropriate for Space; Control System	wall	VARIES	E; Low Voltage
OPVI	1412e	1	Table, Round, 60" Diameter; TO HAVE POWER & DATA: Laminate Columbian Walnut-Legs Starlight Silver	floor	60" diameter x 30"h	Req Access To Floor Utilities
CPCI	2518	1	Board, Marker, Magnetic Cleanable Surface,w/Tray, 48" x 48" x 1"d	wall	48"w x48"h x1"d	None
OPOI	2945	1	Telephone, Conference: TO BE SPECIFIED BY OWNER	desktop	14X13X3	E 115V; Data-Com
OPVI	3043	2	Wastebasket, Stainless Steel, Half Moon Shape 12 gal; Open Top; Perforated Panel	floor	18"w x32"hx12"D	None
OPOI	3903	1	Computer,Personal & Monitor, Wireless Keyboard & Mouse for Desk Use: TO BE SPECIFIED BY OWNER	desktop	24"w x 18"d x 22"h	E 115V; Data
OPOI	4102	1	Cabinet, Audio/Visual, Portable, For 1 PC & MONITOR; SPECS TBD BY I.T. DEPT/3RD PARTY VENDOR	floor	TBD By Design	E 115V Quad; Data/?Com
OPOI	4109	1	Microphone, Ceiling Hung; Poly Com or Comparable, for Meeting Rooms: SPECIFIED BY OWNER I.T. DEPT	ceiling	TBD BY I.T.	TBD

OPOI	4110	1	Cam, Web or Poly Com Cam for Meeting Rooms: TO SPECIFIED BY OWNER I.T. DEPT	wall mount	TBD BY I.T.	TBD
OPOI	4131	1	Television Monitor, Flat Panel, 65"; Wall Mount; REQ BACKING: DETAILS BY I.T. & 3RD PARTY VENDOR	wall/ceiling mt	57.6"w x 2.5"d x 33.2"h	E 115V; Data
OPOI	4149	1	Scheduling System for Conference Room areas; 7" monitor display to be mtd outside of mtg space	wall mount	8.07"w x5.12"h x2.6"d	POE

ARCH ROOM NO 3092

ROOM TITLE CIRCULATION, RH

GROUP	EQNO	QTY	DESCRIPTION	LOCATION	SIZE-STD	UTILITIES
OPOI	8202	1	Defibrillator, External, Automated (AED) With Accessories	Stored	16"w x 14.75"h x8.5"d	None
CPCI	8202a	1	Cabinet, SEMI Recessed AED; Stainless Steel battery alarm/safety clasp/optional custom logo	recessed wall	wall opening 15.25"w x15.25"h x3.75"d	None

ARCH ROOM NO 3093

ROOM TITLE OFFICE, RH 2

GROUP	EQNO	QTY	DESCRIPTION	LOCATION	SIZE-STD	UTILITIES
OPVI	0150a	1	Chair, Rotary,Std Mesh Back,5-Legged, HARD CASTERS-SOFT Flooring ,Ergonomic,Adj Arms, Black	floor	28.25"W 25.25"D 42.25”-47”H	None
OPVI	0200a	1	Chair, Desk Side Chair; HARD GLIDES FOR SOFT FLOORING: Upholstery: Stinson, Fuse, Tangelo	floor	25.25"W 22.25'1'D 33"H	None
OPVI	0700	2	Bookcase/Lateral file combination unit; High Pressure Laminate: Columbian Walnut?	floor	36"w x20"d x68"h	none
OPVI	1500	1	Workstation, Furniture System, Upper & Lower Storage: Laminate-Columbian Walnut; Fabric-Mandarian	floor	Various	E 115V Quads: Data-Comm
OPOI	2941	1	Telephone, Standard Desk: TO BE SPECIFIED BY OWNER	desktop	10"D X 8"W X 4"H	Data-Com
OPVI	3039a	1	Wastebasket, Rectangular, plastic, water/fire resistant,28qt	floor	14lx11wx16h	None
CPCI	3115	1	Robe Hook, Double	wall	6x6x3	None
OPOI	3907	1	Computer With Dual Monitor, Wireless Keyboard & Mouse; TO BE SPECIFIED BY OWNER	desk top	TBD	E 115V; Data

ARCH ROOM NO 3094

ROOM TITLE OFFICE, SHARED RH (2 STAFF)

GROUP	EQNO	QTY	DESCRIPTION	LOCATION	SIZE-STD	UTILITIES
OPVI	0150a	2	Chair, Rotary,Std Mesh Back,5-Legged, HARD CASTERS-SOFT Flooring ,Ergonomic,Adj Arms, Black	floor	28.25"W 25.25"D 42.25”-47”H	None

OPVI	0200a	1	Chair, Desk Side Chair; HARD GLIDES FOR SOFT FLOORING: Upholstery: Stinson, Fuse, Tangelo	floor	25.25"W 22.25'1'D 33"H	None
OPVI	0211a	2	Chair, Conference Type, w/arms; Hard Casters for Soft Flooring, w/arms; Momentum Bravo II & Black	floor	25.5”W X 25.25”D X 41.75”H – 46.5”H	None
OPVI	0700	3	Bookcase/Lateral file combination unit; High Pressure Laminate: Columbian Walnut?	floor	36"w x20"d x68"h	none
OPVI	1412	1	Table, Round, Diameter, 36"	floor	36" diameter x 30"h	None
OPVI	1500	2	Workstation, Furniture System, Upper & Lower Storage: Laminate-Columbian Walnut; Fabric-Mandarian	floor	Various	E 115V Quads: Data-Comm
OPOI	2941	2	Telephone, Standard Desk: TO BE SPECIFIED BY OWNER	desktop	10"D X 8"W X 4"H	Data-Com
OPVI	3039a	2	Wastebasket, Rectangular, plastic, water/fire resistant,28qt	floor	14lx11wx16h	None
OPOI	3907	2	Computer With Dual Monitor, Wireless Keyboard & Mouse; TO BE SPECIFIED BY OWNER	desk top	TBD	E 115V; Data

ARCH ROOM NO **3095**

ROOM TITLE **OFFICE, STAFF**

GROUP	EQNO	QTY	DESCRIPTION	LOCATION	SIZE-STD	UTILITIES
OPVI	0150a	1	Chair, Rotary,Std Mesh Back,5-Legged, HARD CASTERS-SOFT Flooring ,Ergonomic,Adj Arms, Black	floor	28.25"W 25.25"D 42.25”-47”H	None
OPVI	0200a	1	Chair, Desk Side Chair; HARD GLIDES FOR SOFT FLOORING: Upholstery: Stinson, Fuse, Tangelo	floor	25.25"W 22.25'1'D 33"H	None
OPVI	0700	2	Bookcase/Lateral file combination unit; High Pressure Laminate: Columbian Walnut?	floor	36"w x20"d x68"h	none
OPVI	1500	1	Workstation, Furniture System, Upper & Lower Storage: Laminate-Columbian Walnut; Fabric-Mandarian	floor	Various	E 115V Quads: Data-Comm
OPOI	2941	1	Telephone, Standard Desk: TO BE SPECIFIED BY OWNER	desktop	10"D X 8"W X 4"H	Data-Com
OPVI	3039a	1	Wastebasket, Rectangular, plastic, water/fire resistant,28qt	floor	14lx11wx16h	None
CPCI	3115	1	Robe Hook, Double	wall	6x6x3	None
OPOI	3907	1	Computer With Dual Monitor, Wireless Keyboard & Mouse; TO BE SPECIFIED BY OWNER	desk top	TBD	E 115V; Data

ARCH ROOM NO **3096**

ROOM TITLE **OFFICE, STAFF**

GROUP	EQNO	QTY	DESCRIPTION	LOCATION	SIZE-STD	UTILITIES

OPVI	0150a	1	Chair, Rotary,Std Mesh Back,5-Legged, HARD CASTERS-SOFT Flooring ,Ergonomic,Adj Arms, Black	floor	28.25"W 25.25"D 42.25”-47”H	None
OPVI	0200a	1	Chair, Desk Side Chair; HARD GLIDES FOR SOFT FLOORING: Upholstery: Stinson, Fuse, Tangelo	floor	25.25"W 22.25'1'D 33"H	None
OPVI	0700	2	Bookcase/Lateral file combination unit; High Pressure Laminate: Columbian Walnut?	floor	36"w x20"d x68"h	none
OPVI	1500	1	Workstation, Furniture System, Upper & Lower Storage: Laminate-Columbian Walnut; Fabric-Mandarian	floor	Various	E 115V Quads: Data-Comm
OPOI	2941	1	Telephone, Standard Desk: TO BE SPECIFIED BY OWNER	desktop	10"D X 8"W X 4"H	Data-Com
OPVI	3039a	1	Wastebasket, Rectangular, plastic, water/fire resistant,28qt	floor	14lx11wx16h	None
CPCI	3115	1	Robe Hook, Double	wall	6x6x3	None
OPOI	3907	1	Computer With Dual Monitor, Wireless Keyboard & Mouse; TO BE SPECIFIED BY OWNER	desk top	TBD	E 115V; Data

ARCH ROOM NO **3097**

ROOM TITLE **OFFICE, STAFF**

GROUP	EQNO	QTY	DESCRIPTION	LOCATION	SIZE-STD	UTILITIES
OPVI	0150a	1	Chair, Rotary,Std Mesh Back,5-Legged, HARD CASTERS-SOFT Flooring ,Ergonomic,Adj Arms, Black	floor	28.25"W 25.25"D 42.25”-47”H	None
OPVI	0200a	1	Chair, Desk Side Chair; HARD GLIDES FOR SOFT FLOORING: Upholstery: Stinson, Fuse, Tangelo	floor	25.25"W 22.25'1'D 33"H	None
OPVI	0700	2	Bookcase/Lateral file combination unit; High Pressure Laminate: Columbian Walnut?	floor	36"w x20"d x68"h	none
OPVI	1500	1	Workstation, Furniture System, Upper & Lower Storage: Laminate-Columbian Walnut; Fabric-Mandarian	floor	Various	E 115V Quads: Data-Comm
OPOI	2941	1	Telephone, Standard Desk: TO BE SPECIFIED BY OWNER	desktop	10"D X 8"W X 4"H	Data-Com
OPVI	3039a	1	Wastebasket, Rectangular, plastic, water/fire resistant,28qt	floor	14lx11wx16h	None
CPCI	3115	1	Robe Hook, Double	wall	6x6x3	None
OPOI	3907	1	Computer With Dual Monitor, Wireless Keyboard & Mouse; TO BE SPECIFIED BY OWNER	desk top	TBD	E 115V; Data

ARCH ROOM NO **3098**

ROOM TITLE **OFFICE, STAFF**

GROUP	EQNO	QTY	DESCRIPTION	LOCATION	SIZE-STD	UTILITIES

OPVI	0150a	1	Chair, Rotary,Std Mesh Back,5-Legged, HARD CASTERS-SOFT Flooring ,Ergonomic,Adj Arms, Black	floor	28.25"W 25.25"D 42.25”-47”H	None
OPVI	0200a	1	Chair, Desk Side Chair; HARD GLIDES FOR SOFT FLOORING: Upholstery: Stinson, Fuse, Tangelo	floor	25.25"W 22.25'1'D 33"H	None
OPVI	0700	2	Bookcase/Lateral file combination unit; High Pressure Laminate: Columbian Walnut?	floor	36"w x20"d x68"h	none
OPVI	1500	1	Workstation, Furniture System, Upper & Lower Storage: Laminate-Columbian Walnut; Fabric-Mandarian	floor	Various	E 115V Quads: Data-Comm
OPOI	2941	1	Telephone, Standard Desk: TO BE SPECIFIED BY OWNER	desktop	10"D X 8"W X 4"H	Data-Com
OPVI	3039a	1	Wastebasket, Rectangular, plastic, water/fire resistant,28qt	floor	14lx11wx16h	None
CPCI	3115	1	Robe Hook, Double	wall	6x6x3	None
OPOI	3907	1	Computer With Dual Monitor, Wireless Keyboard & Mouse; TO BE SPECIFIED BY OWNER	desk top	TBD	E 115V; Data

ARCH ROOM NO **3099**

ROOM TITLE **OFFICE, STAFF**

GROUP	EQNO	QTY	DESCRIPTION	LOCATION	SIZE-STD	UTILITIES
OPVI	0150a	1	Chair, Rotary,Std Mesh Back,5-Legged, HARD CASTERS-SOFT Flooring ,Ergonomic,Adj Arms, Black	floor	28.25"W 25.25"D 42.25”-47”H	None
OPVI	0200a	1	Chair, Desk Side Chair; HARD GLIDES FOR SOFT FLOORING: Upholstery: Stinson, Fuse, Tangelo	floor	25.25"W 22.25'1'D 33"H	None
OPVI	0700	2	Bookcase/Lateral file combination unit; High Pressure Laminate: Columbian Walnut?	floor	36"w x20"d x68"h	none
OPVI	1500	1	Workstation, Furniture System, Upper & Lower Storage: Laminate-Columbian Walnut; Fabric-Mandarian	floor	Various	E 115V Quads: Data-Comm
OPOI	2941	1	Telephone, Standard Desk: TO BE SPECIFIED BY OWNER	desktop	10"D X 8"W X 4"H	Data-Com
OPVI	3039a	1	Wastebasket, Rectangular, plastic, water/fire resistant,28qt	floor	14lx11wx16h	None
CPCI	3115	1	Robe Hook, Double	wall	6x6x3	None
OPOI	3907	1	Computer With Dual Monitor, Wireless Keyboard & Mouse; TO BE SPECIFIED BY OWNER	desk top	TBD	E 115V; Data

ARCH ROOM NO **3100**

ROOM TITLE **ALCOVE, COPY: FACULTY**

GROUP	EQNO	QTY	DESCRIPTION	LOCATION	SIZE-STD	UTILITIES

OPVI	3062b	1	Wastebasket, Office,Tall, 23 gallon, Open Top; COLOR: GRAY	floor	11"w x 22"d x 30"h	None
OPSVI	3758	1	Copier, High Vol, 55ppm, MF, networkable: EXISTING LEASE BY OWNER: INSTALLED BY 3RD PARTY	floor	Typical Options Req 6 ft x 3 ft	E-Ded 120V; 20 Amps; RJ 45 Plug Data-Com
OPVI	3764	1	Shredder, Cross Cut, 16 Gallon Capacity, Ultra Quiet, 14 sheets at time shred	floor	19.7”w x15"dx 34.25”h	E Ded 120V

ARCH ROOM NO **3105**

ROOM TITLE **RESTROOM, L3**

GROUP	EQNO	QTY	DESCRIPTION	LOCATION	SIZE-STD	UTILITIES
OPVI	3043c	1	Waste Container, Drop in Top, Suitable for Restroom Areas, 15 gallon, Textured Black	floor	15" diameter x 30"h	None
OPOI	3088b	1	Container, Sharps: Wall Mounted, Lockable	Wall mount	10 1/2"W x 4 1/2"D x 12"H	None
OPOI	3100	1	Dispenser, Paper Towel: TYPE TBD ? BY OWNER-CURRENT JANITORIAL SERVICE	wall mount	TBD	None
OPOI	3102	1	Dispenser, Soap: SPECIFICATIONS & Type TBD BY OWNER	wall mount	7"w x4"d x11.5"h	None

ARCH ROOM NO **3106A & 3106B**

ROOM TITLE **CLASSROOM, LL4**

GROUP	EQNO	QTY	DESCRIPTION	LOCATION	SIZE-STD	UTILITIES
OPVI	0212a	50	Chair, Conference Type; MOLDED PLASTIC BACK & SEAT On Hard Casters For Carpet	floor	25.875"W 21.3125"D 32.625"H	None
OPVI	1005a	4	Chair, Side,MOLDED PLASTIC BACK & SEAT: HARD BLACK CASTERS FOR CARPET	floor	23"W 18.3125"D 32.625"H	None
CPCI	1054	1	Clock System, Synchronized; Analogue, With Second Hand; Sized Appropriate for Space; Control System	wall	VARIES	E; Low Voltage
OPVI	1329	2	Stool, Bar; Static; with low profile back; no arms; small scale; Fabric: Bitmap-Sienna	floor	18.75"w x 23.75"d x 30.25"h	None
OPVI	1424a	4	Table Educational LEC; Access to Power/data/etc…:Laminate Asian Knight; Black Grommet & Power	floor	72" diameter x 30"h	Power/USB/Data
OPVI	1424b	2	Table Educational LEC; Access to Power/data/etc…:Laminate Asian Knight; Black Grommet & Power	floor	84" diameter x 30"h	Power/USB/Data
CPCI	2518	8	Board, Marker, Magnetic Cleanable Surface,w/Tray, 48" x 48" x 1"d	wall	48"w x48"h x1"d	None
OPVI	3043	2	Wastebasket, Stainless Steel, Half Moon Shape 12 gal; Open Top; Perforated Panel	floor	18"w x32"hx12"D	None
OPOI	3903	2	Computer,Personal & Monitor, Wireless Keyboard & Mouse for Desk Use: TO BE SPECIFIED BY OWNER	desktop	24"w x 18"d x 22"h	E 115V; Data

OPOI	3907	2	Computer With Dual Monitor, Wireless Keyboard & Mouse; TO BE SPECIFIED BY OWNER	desk top	TBD	E 115V; Data
OPOI	4103	2	Podium, Cabinet, Audio/Visual, Portable, For Up TO 2 PC & DUAL MONITOR; SPECS BY I.T. DEPT/3RD	floor	TBD By Design	E 115V Quad; 2 Data/?Com
OPOI	4109	1	Microphone, Ceiling Hung; Poly Com or Comparable, for Meeting Rooms: SPECIFIED BY OWNER I.T. DEPT	ceiling	TBD BY I.T.	TBD
OPOI	4110	2	Cam, Web or Poly Com Cam for Meeting Rooms: TO SPECIFIED BY OWNER I.T. DEPT	wall mount	TBD BY I.T.	TBD
OPOI	4131a	2	Television Monitor, Flat Panel, 65"; Ceiling Mount; REQ STRUCTURAL SUPPORT; I.T. & 3RD PARTY	ceiling mt	57.6"w x 2.5"d x 33.2"h	E 115V; Data
OPOI	4136	6	Television-Monitor, High Resolution Flat Panel, 55", WaMount; REQUIRES BACKING: SPEC BY OWNER	wall or ceiling	49.2"w x 29"h x 3.1"d	E 115V; Cabling; Data
OPOI	4149	2	Scheduling System for Conference Room areas; 7" monitor display to be mtd outside of mtg space	wall mount	8.07"w x5.12"h x2.6"d	POE

ARCH ROOM NO **3108**

ROOM TITLE **CONFERENCE ROOM, 2 FACULTY (NORTH)**

GROUP	EQNO	QTY	DESCRIPTION	LOCATION	SIZE-STD	UTILITIES
OPVI	0211a	10	Chair, Conference Type, w/arms; Hard Casters for Soft Flooring, w/arms; Momentum Bravo II & Black	floor	25.5”W X 25.25”D X 41.75”H – 46.5”H	None
OPVI	1005a	1	Chair, Side,MOLDED PLASTIC BACK & SEAT: HARD BLACK CASTERS FOR CARPET	floor	23"W 18.3125"D 32.625"H	None
CPCI	1054	1	Clock System, Synchronized; Analogue, With Second Hand; Sized Appropriate for Space; Control System	wall	VARIES	E; Low Voltage
OPVI	1402b	1	Table, Conference, POWER for table; 2 Data for Phones; DETAILS & FINISH TBD	floor	144"L X 42"D X 30"H	None
CPCI	2523	1	Board, Marker; Large for Stage Area/Conference Spaces; Wall Mounted	wall	8'w x 4'h x2"d	None
OPOI	2945	1	Telephone, Conference: TO BE SPECIFIED BY OWNER	desktop	14X13X3	E 115V; Data-Com
OPVI	3043	1	Wastebasket, Stainless Steel, Half Moon Shape 12 gal; Open Top; Perforated Panel	floor	18"w x32"hx12"D	None
OPOI	3907	1	Computer With Dual Monitor, Wireless Keyboard & Mouse; TO BE SPECIFIED BY OWNER	desk top	TBD	E 115V; Data
OPOI	4102	1	Cabinet, Audio/Visual, Portable, For 1 PC & MONITOR; SPECS TBD BY I.T. DEPT/3RD PARTY VENDOR	floor	TBD By Design	E 115V Quad; Data/?Com
OPOI	4109	1	Microphone, Ceiling Hung; Poly Com or Comparable, for Meeting Rooms: SPECIFIED BY OWNER I.T. DEPT	ceiling	TBD BY I.T.	TBD

OPOI	4110	1	Cam, Web or Poly Com Cam for Meeting Rooms: TO SPECIFIED BY OWNER I.T. DEPT	wall mount	TBD BY I.T.	TBD
OPOI	4131	1	Television Monitor, Flat Panel, 65"; Wall Mount; REQ BACKING: DETAILS BY I.T. & 3RD PARTY VENDOR	wall/ceiling mt	57.6"w x 2.5"d x 33.2"h	E 115V; Data
OPOI	4149	1	Scheduling System for Conference Room areas; 7" monitor display to be mtd outside of mtg space	wall mount	8.07"w x5.12"h x2.6"d	POE

ARCH ROOM NO **3109**

ROOM TITLE **RESTROOM, L3**

GROUP	EQNO	QTY	DESCRIPTION	LOCATION	SIZE-STD	UTILITIES
OPVI	3043c	1	Waste Container, Drop in Top, Suitable for Restroom Areas, 15 gallon, Textured Black	floor	15" diameter x 30"h	None
OPOI	3088b	1	Container, Sharps: Wall Mounted, Lockable	Wall mount	10 1/2"W x 4 1/2"D x 12"H	None
OPOI	3100	1	Dispenser, Paper Towel: TYPE TBD ? BY OWNER-CURRENT JANITORIAL SERVICE	wall mount	TBD	None
OPOI	3102	1	Dispenser, Soap: SPECIFICATIONS & Type TBD BY OWNER	wall mount	7"w x4"d x11.5"h	None

ARCH ROOM NO **3110A & 3110B**

ROOM TITLE **CLASSROOM, LL3**

GROUP	EQNO	QTY	DESCRIPTION	LOCATION	SIZE-STD	UTILITIES
OPVI	0212a	50	Chair, Conference Type; MOLDED PLASTIC BACK & SEAT On Hard Casters For Carpet	floor	25.875"W 21.3125"D 32.625"H	None
OPVI	1005a	4	Chair, Side,MOLDED PLASTIC BACK & SEAT: HARD BLACK CASTERS FOR CARPET	floor	23"W 18.3125"D 32.625"H	None
CPCI	1054	1	Clock System, Synchronized; Analogue, With Second Hand; Sized Appropriate for Space; Control System	wall	VARIES	E; Low Voltage
OPVI	1329	2	Stool, Bar; Static; with low profile back; no arms; small scale; Fabric: Bitmap-Sienna	floor	18.75"w x 23.75"d x 30.25"h	None
OPVI	1424a	4	Table Educational LEC; Access to Power/data/etc…:Laminate Asian Knight; Black Grommet & Power	floor	72" diameter x 30"h	Power/USB/Data
OPVI	1424b	2	Table Educational LEC; Access to Power/data/etc…:Laminate Asian Knight; Black Grommet & Power	floor	84" diameter x 30"h	Power/USB/Data
CPCI	2518	8	Board, Marker, Magnetic Cleanable Surface,w/Tray, 48" x 48" x 1"d	wall	48"w x48"h x1"d	None
OPVI	3043	2	Wastebasket, Stainless Steel, Half Moon Shape 12 gal; Open Top; Perforated Panel	floor	18"w x32"hx12"D	None
OPOI	3903	2	Computer,Personal & Monitor, Wireless Keyboard & Mouse for Desk Use: TO BE SPECIFIED BY OWNER	desktop	24"w x 18"d x 22"h	E 115V; Data

OPOI	3907	2	Computer With Dual Monitor, Wireless Keyboard & Mouse; TO BE SPECIFIED BY OWNER	desk top	TBD	E 115V; Data
OPOI	4103	2	Podium, Cabinet, Audio/Visual, Portable, For Up TO 2 PC & DUAL MONITOR; SPECS BY I.T. DEPT/3RD	floor	TBD By Design	E 115V Quad; 2 Data/?Com
OPOI	4109	1	Microphone, Ceiling Hung; Poly Com or Comparable, for Meeting Rooms: SPECIFIED BY OWNER I.T. DEPT	ceiling	TBD BY I.T.	TBD
OPOI	4110	2	Cam, Web or Poly Com Cam for Meeting Rooms: TO SPECIFIED BY OWNER I.T. DEPT	wall mount	TBD BY I.T.	TBD
OPOI	4131a	2	Television Monitor, Flat Panel, 65"; Ceiling Mount; REQ STRUCTURAL SUPPORT; I.T. & 3RD PARTY	ceiling mt	57.6"w x 2.5"d x 33.2"h	E 115V; Data
OPOI	4136	6	Television-Monitor, High Resolution Flat Panel, 55", WaMount; REQUIRES BACKING: SPEC BY OWNER	wall or ceiling	49.2"w x 29"h x 3.1"d	E 115V; Cabling; Data
OPOI	4149	2	Scheduling System for Conference Room areas; 7" monitor display to be mtd outside of mtg space	wall mount	8.07"w x5.12"h x2.6"d	POE

ARCH ROOM NO **3112**

ROOM TITLE **BREAKROOM, FACULTY**

GROUP	EQNO	QTY	DESCRIPTION	LOCATION	SIZE-STD	UTILITIES
OPVI	1005b	12	Chair, Side, No Arms, Vinyl Upholstery; SOFT BLACK CASTERS FOR HARD FLOORING	floor	23"W 18.3125"D 32.625"H	None
CPCI	1054	1	Clock System, Synchronized; Analogue, With Second Hand; Sized Appropriate for Space; Control System	wall	VARIES	E; Low Voltage
OPVI	1411i	3	Table, Rectangular, SITTING HEIGHT;	floor	42"d x66"l x30"h	None
OPVI	1412b	1	Table, Round, 42" Diameter:	floor	42" diam x 30"h	None
OPVI	3040c	2	Wastebasket, 23 Gallon, Slanted Front for easy Access; For Undercounter Areas Color GRAY	floor	11"w x22"l x25"h	None
OPVI	3046a	1	Trash Collector, 32 Gal Brute, Vented, Round, Open Top: Color to be Selected (pkg of 6) GRAY	floor	21.92" Diameter; 25" with handles; 28"h	None
OPOI	3100	1	Dispenser, Paper Towel: TYPE TBD ? BY OWNER-CURRENT JANITORIAL SERVICE	wall mount	TBD	None
OPOI	3102	1	Dispenser, Soap: SPECIFICATIONS & Type TBD BY OWNER	wall mount	7"w x4"d x11.5"h	None
OPOI	3102a	1	Dispenser, Waterless Hand Sanitizer	wall	TBD	None
CPCI	3154	1	DISPENSER, HOT WATER; TO BE LOCATED ON SINK DECK	N/A	N/A	WATER SUPPLY

OPVI	3194	3	Microwave, 1.6 Cu Ft, SS, 1100 Watts; multiple one touch options; 10 cooking levels,	counter/shelf	21.75"w x 13"h x 18.5"d	E 120V; 15 amps
OPVICI	3215	1	Coffeemaker, Keurig, Automatic, Individual Cup, Commercial	countertop	10.5"w x14"d x13.9"h	E 120V; 15amp; SP; 1400 watt; water supply
OPVICI	3216	1	Coffeemaker, Automatic, With Water Dispenser, Low Profile, 3 warmers	countertop	16.5"w x 17.75"d x 17"h	E 120V; 15 amp;1800 watts;NEMS 5-15P; water supply
CPCI	3236a	1	Disposal, Garbage for Sink; SPECIFICATIONS TO BE PROVIDED BY MEP	attached/sink	See MFG Details	See MFG Details
OPVI	3269e	1	Refrigerator, Full, Residential, Single Door; Smudge Proof SS; Counter Depth; optional trim kit	floor	32"w x 26.5"d x 71.5"h with hinges	E Ded 115V; 20 Amp
OPVI	3269f	1	Freezer, Full, Residential, Single Door; Smudge Proof SS;Counter Depth; optional trim kit	floor	32"w x 26.5"d x 71.5"h with hinges	E Ded 115V; 20 Amp
OPVICI	3305	1	IceMaker, ADA, Undercounter, 22 lb ice bin capacity; 80 lbs ice production/24 hrs	undercounter	14 7/8"w x 22 5/8"d x 31.5"h	E DED 115V/15 Amp Cir Brkr; 1850 BTU/hr
OPVICI	3352a	1	Dishwasher, High End Residential, Energy Star Rated, 5 Cycle Including Sanitize, 3 Racks, SS	floor	Req Cut out: 33 7/8"h x 23 5/8"w x 24"d	E 120V; Ded 12 amp; 1440 watts; Water/Drain
OPOI	4139	1	Television Monitor, 48",MOUNT TYPE TBD & SPECIFIED BY OWNER/3RD PARTY	wall	TBD	E 115V; DATA

0403

FIRE RESISTANT 4 DRAWER LATERAL FILE



FIREKING®

Total protection for critical business documents.

- UL Class 350 rated at 1,700°F for 1 hour.
- High-security lock resists picking and drilling. Lock all or select drawers with one key.
- Impact, explosion and water resistant.
- Insulated walls reinforced with 14-gauge welded steel wire.
- Accepts letter/legal hanging folders.

MODEL NO.	DESCRIPTION	NO. OF DRAWERS	DIMENSIONS W x D x H	WT. (LBS.)	PRICE EACH		ADD TO CART
					1	2+	
H-6941	Letter/ Legal	4	31 x 22 x 53"	794	$2,679	$2,579	

SOURCE: https://www.uline.com/Product/Detail/H-6941/File-Cabinets-and-Mailroom/Lateral-Fire-Resistant-File-Cabinet-4-Drawer?pricode=WA9763&gadtype=pla&id=H-6941&gclid=EAIaIQobChMI-dej5vjP4AIVhFcNCh26xAUDEAYYASABEgI9F_D_BwE&gclsrc=aw.ds

0440

CART, BOOK

SINGLE SIDED 2 SHELF



Material:	18-gauge steel frame, 20-gauge steel shelves
Finish:	Scratch-resistant powder paint finish
Casters:	Four 4" ball-bearing casters
Shelves:	2 slanted shelves
Shelf Dimensions:	24" W x 12" D
Weight Capacity:	115 lbs./shelf
Other Info:	Made from 25-35% post-consumer recycled steel content
Assembly:	Ships assembled
Width:	26"
Depth:	14"
Height:	32"
Distance Between Shelves:	13"
Weight:	27.0 lbs.

SOURCE:

https://www.schooloutfitters.com/catalog/product_info?pfam_id=PFAM2237&products_id=PRO7211

1021
Massage Chair

human touch
be your best. feel your best.™

Enter Wellness.

Unlike other massage chairs you may have experienced, the new AcuTouch® 6.1 immerses you in a therapeutic massage that is truly fully encompassing with its 3D Flexglide® 360 massage technology and S-track system. Designed to completely envelop you in wellness, comfort and luxury, this revolutionary chair invites you to experience a remarkable array of therapeutic massage features and smart conveniences. Take a seat in this stylish re-imagination of the utilitarian massage chair, grab the LCD controller, and escape to a world where pain, stress and discomfort are distant memories. Enter the AcuTouch® 6.1. Enter Wellness.

AcuTouch® 6.1
Human Touch® Massage Chair



LCD Controller

1021



AcuTouch® 6.1
Human Touch® Massage Chair

1 3D Flexglide® 360 Massage Technology & S-Track System



Every contour of your body is therapeutically massaged by unparalleled flexibility and seamless glide along with an S-track system that follows the natural curve of the spine down to the lower lumbar area of the back.

2 Auto-Immersion Experience

Indulge in nine Human Touch Wellness Council-designed Auto Immersion Programs that focus on full-body, shoulders and lower back, and an effective collection of therapeutic relaxation and recovery programs.

3 Targeted Massage Programs



Remedy those trouble spots and rejuvenate the mind and body with twelve targeted techniques that stretch, loosen and relax specific muscle groups, from the shoulders to the lower back. Set massage zone lengths to 3, 6 or 9 inches.

4 Cloud Touch Massage



Relax as if floating on air while the strategically placed active contours located at the shoulders, hips, seat and arms help to lift, squeeze, manipulate, and massage the body.

5 Foot & Calf Massager With Patented Figure-Eight® Technology

Refreshes and invigorates sore muscles while circulating blood from the feet toward the core of the body.

5-YEAR LIMITED WARRANTY

5-Years Structural
3-Years Parts
1-Year In-Home Service

DIMENSIONS:

Chair Reclined Dimensions:	70"L x 29"W x 32"H
Chair Upright Dimensions:	56"L x 29"W x 45"H
Seat Width:	17"
Product Weight (out of box):	156 lbs.
Maximum Weight Load:	285 lbs.

PART NUMBERS

Black SōfHyde
100-AT61-001

Espresso SōfHyde
100-AT61-002

Human Touch®, LLC
4600 E Conant Street, Long Beach, CA 90808, USA (800) 742-5493

©2018 Human Touch®, LLC. Human Touch is a registered trademark of Human Touch®, LLC. No medical claims are warranted or implied by the use of this product. Specifications are subject to change.

Endorsed by WORLD FEDERATION OF CHIROPRACTIC

human touch
be your best. feel your best.™

SECTION 27 5313

CLOCK SYSTEM

1054 REFER TO MEP DRAWINGS

Transmitters

XR SERIES

XR Series Transmitters

XR Series Transmitters from Primex Wireless deliver the latest technology in time synchronization. Leveraging the precision of GPS satellite or Network Time Protocol (NTP) time, the XR Series Transmitters wirelessly synchronize time for analog and digital clocks, timers and other time receivers throughout a facility.

By taking advantage of the most effective wireless 72MHz frequency, XR Series Transmitters efficiently send time synchronization signals through commercial building materials to ensure all devices receive important time updates, even for Daylight Saving Time and after a power outage. XR Series Transmitters can be configured with a variety of power output levels to provide coverage for a single building or an entire campus.

Flexible Configurations

XR Series Transmitters may be equipped for to receive either GPS or NTP time sources, and provide the flexibility to scale signal coverage from a single building to an entire campus.

Industry Leading Features

- Utilizes highly effective 72MHz frequency
- System diagnostics are viewable on transmitter display
- Optional Ethernet port for incorporating NTP Time Source
- Internal memory backup of 8 hours

XR Series 1-Watt Transmitters

Choose the model to meet your needs; either configured with an indoor antenna, or with an external roof mount antenna to expand coverage.

1-WATT TRANSMITTERS

Part Number	Power	Antenna Type
XR01IM	1 watt	Attached internal
XR01EM	1 watt	External roof
XR01R	1 watt Repeater	Attached internal



1-Watt Transmitter

XR Series 5-Watt and 30-Watt Transmitters

Campus wide deployments are covered via XR Series 5-watt or 30-watt Transmitters, which include an external roof mounted antenna and require installation by a Primex Certified Installer.

5 /30-WATT TRANSMITTERS

Part Number	Power	Antenna Type
XR05EM	5 watt	External roof
XR30EM	30 watt	External roof



5- or 30-Watt Transmitter

Primex WIRELESS

1054 REFER TO MEP DRAWINGS

Transmitters

XR SERIES

1-Watt Transmitter Specifications:

- 1-Watt maximum transmission (at transmitter)
- 72MHz frequency range
- 49 channels available (pre-programmed prior to shipping)
- Daylight Saving Time bypass switch
- Time zone adjustment switch (pre-programmed on XR01E prior to shipping)
- LCD display for time, date, and signal verification
- Dimensions: 17.0"L x 12.0"W x 1.7"D (43.2cm x 30.5cm x 4.32cm)
- Power Supply:
  – Input: 120 VAC, 50/60 Hz, 0.6 Amp
  – Output: 9 VDC, 2.78 Amp (6 ft. cord, 1.83m)
- Operating Range: 32°- 122°F (0° - 50°C)

Transmitter with Internal Antenna (refer to Figure 1)

- Antenna: 46.0"L (116.8cm)
- Weight: 7.75 lbs. (3.5kg)

Figure 1

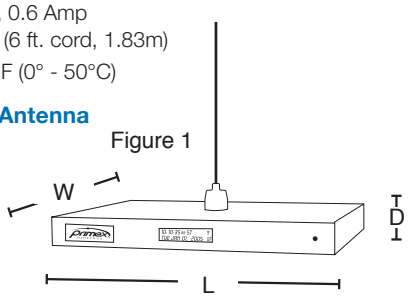

Transmitter with External Antenna

- Cabling: 100' (30.48m) between transmitter and antenna provided
- FCC Part 90 Accepted
- IC RSS-119 Accepted
- Weight: 9 lbs. (4.1kg)

Satellite Transmitter (XR01R)

- Requires installation of a Master Transmitter in order to receive and transmit the GPS time signal
- Antenna: 46.0"L (116.8cm)
- Weight: 7.75 lbs. (3.5kg)

Outdoor Ground Plane Antenna

- For use with XR01E Transmitters
- Dimensions: 29.4"H x 41.5"W (74.7cm x 105.41cm)
- Lightning Protection: Direct Ground
- Cabling: 100' (30.48m) between transmitter and antenna provided
- FCC Part 90 Accepted
- IC RSS-119 Accepted
- Weight: 8.25 lbs. (3.75kg)

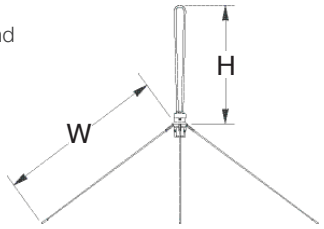

5/30-Watt Specifications:

- Operating Frequency Range: 72MHz
- Enclosure Dimensions: 22"W x 17"H x 22"D (55.88cm x 43.18cm 55.88cm)
- Approx. Weight: 55 lbs. (24.9kg)
- Power Supply Requirements:
  – 120 VAC, 50/60 Hz, 6.0A Max
- Oversized heat sink provides adequate cooling
- Amplifier Output Bandwidth: >20 MHz maximum
- Connector at Antenna: N-male
- 100' (30.48cm) of cabling between transmitter and antenna

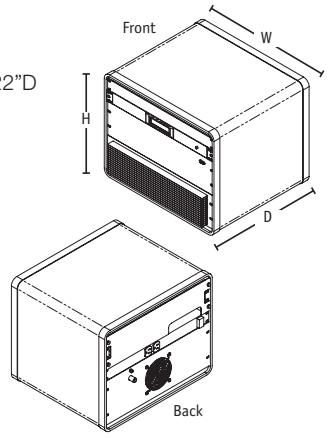

GPS Receiver Specifications:

- Included with Primary Transmitter
- 10' (3.05m) cable. 50, 100, 150 and 200 foot (15.24m, 30.48m, 45.72m and 60.69m) extensions available
- Mounting bracket and hardware included for rooftop or window installation
- Dimensions: 2.5"W x .75"H (6.35cm x 1.91cm)
- Mounting Bracket: 3.5"W x 1.4"H x 4.5"D (8.89cm x 3.56cm x 11.43cm)
- Weight: 0.75 lb. (.34kg)
- Operating Range: -32°- 158°F (-30° - 70°C)

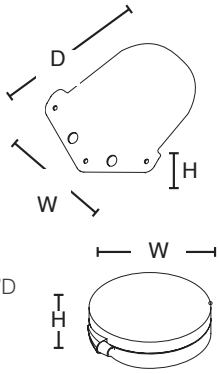

Receiver Switch Specifications:

- Included with Satellite Transmitter
- 5' (1.52m) RS232 cable connects Receiver Switch to the Satellite Transmitter
- Dimensions: 5.75"L x 4.25"H x 1.25"D (14.6cm x 10.8cm x 3.16cm)
- Antenna: 12.5"L (31.75cm)
- Weight: 0.75 lb. (.34kg)
- Power Supply:
  – Input: 120 VAC, 50/60 Hz, 0.4 Amp
  – Output: 9 VDC, 0.25 Amp
  (6 ft. cord, 1.83m)
- Operating Range: -32°- 158°F (-36° - 70°C)

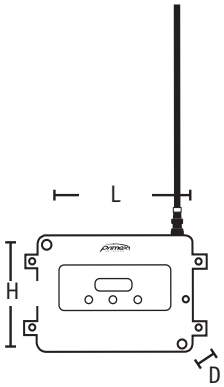

To Learn More:

Call 800.537.0464 (U.S.)
800.330.1459 (Canada)
Email: info@primexwireless.com

primexwireless.com

©2012 Primex Wireless, Inc. The Primex logo is a registered trademark of Primex Wireless, Inc.
XR is a trademark of Primex Wireless, Inc. All other trademarks are the property of their respective owners.
All Rights Reserved.
2011.053

1054 REFER TO MEP DRAWINGS

PRODUCT DATA SHEET

Primex WIRELESS
GPS SYNCHRONIZED TIME SYSTEMS ™

Traditional Series Clocks

Our traditional Series Clocks are ideal for many applications with easy to read dials and durable polycarbonate frames and lenses. We offer a variety of clock styles, colors, sizes and dial options. A water resistant model is available for environments with high moisture and humidity. The splash-proof back plate resists water in places such as pools and food processing areas.

Battery Operated Models

14280	9" (22.86cm) Black
14155	12.5" (31.75cm) Black
14157	12.5" (31.75cm) Taupe
14159	12.5" (31.75cm) White
14164	12.5" (31.75cm) Black, Dual-Sided
14166	12.5" (31.75cm) Taupe, Dual-Sided
14168	12.5" (31.75cm) White, Dual-Sided
14163	16" (40.64cm) Black

Water Resistant Battery Operated Models

14240	12.5" (31.75cm) Black, Water Resistant
14241	12.5" (31.75cm) Taupe, Water Resistant
14243	12.5" (31.75cm) White, Water Resistant

Electric Models

14323	12.5" (31.75cm) 24VAC Black
14306	12.5" (31.75cm) 120VAC Black
14338	16" (40.64cm) 24VAC Black
14339	16" (40.64cm) 120VAC Black

Electric Dual-Sided Models

14330	12.5" (31.75cm) 120VAC Black, wall
14331	12.5" (31.75cm) 120VAC Black, ceiling
14332	12.5" (31.75cm) 24VAC Black, wall
14333	12.5" (31.75cm) 24VAC Black, ceiling
14326	12.5" (31.75cm) 120VAC Taupe, wall
14327	12.5" (31.75cm) 120VAC Taupe, ceiling
14328	12.5" (31.75cm) 24VAC Taupe, wall
14329	12.5" (31.75cm) 24VAC Taupe, ceiling
14349	12.5" (31.75cm) 120VAC White, wall
14348	12.5" (31.75cm) 120VAC White, ceiling
14350	12.5" (31.75cm) 24VAC White, wall
14351	12.5" (31.75cm) 24VAC White, ceiling



Dual-Sided Wall Mounted



12.5" (31.75cm) and 16" (40.64cm)



9" (22.86cm)

Customize me!

Available Frame Colors

Black *Taupe* *White*

Remote Antenna Clock

The remote antenna clock is great for use in rooms with sensitive instruments that are shielded from radio frequencies. In such instances, the clock can be installed inside the room, and connected by a shielded cable with an antenna that is located outside the RF-shielded area.

Battery Operated Model

14244	12.5" (31.75cm) Remote Antenna Clock



Remote Antenna Clock

1054 REFER TO MEP DRAWINGS

Clock Specifications:

Traditional Series Models

- High impact polycarbonate frame and lens
- Automatically adjusts for Daylight Saving Time
- Minimum battery life of 5 years
  - Batteries not included

    9" (22.86cm) models require two C cell batteries

    12.5" (31.75cm) models require two D cell batteries- Lithium battery pack available for an additional cost, order part #14885

    16" (40.64cm) models requires two D cell batteries- Lithium battery pack available for an additional cost, order part #14885
- Operating range: 32° - 158°F (0° - 70°C)
- Clock Lock available on all 12.5" (31.75cm) and 9" (22.86cm) models The Clock Lock features two uniquely shaped hangers that require a sequence of movements to install and remove the clock.

Electric Models Power Supply

Input	24VAC	120VAC
Current Draw	.21AMPS	25mA
Cord Details	18" (45.72cm) pigtail	18" (45.72cm) two-prong

Dual Sided Models (refer to Figure 1)

- Wall or ceiling mount
- Provides easy viewing for hallway applications
- Easy to assemble

Figure 1

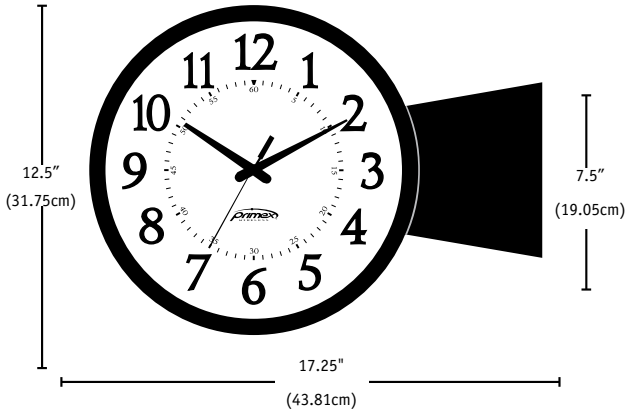

Water Resistant Models

- Suitable cleaning solutions include water or diluted alcohols.

Remote Antenna Clock

- Antenna: 12.4"L (31.5cm) mounted on a 15' (4.57m)cord

Primex Wireless - Corporate Headquarters
965 Wells Street
Lake Geneva, WI 53147
(800) 537-0464
www.primexwireless.com

Primex Wireless – Canada
1310 Kerrisdale Blvd Unit #4
Newmarket, Ontario L3Y 8V6
(800) 330-1459
www.primexwireless.ca

Note: All specifications are subject to change without prior notice.

1094

POSTAGE HANDLING BIN/TOTE



As lightweight as corrugated but with the durability of plastic. Holds up to 80 lbs.

- Steel reinforced; welded for strength, won't collapse. Nestable.
- Popular choice for mail and package handling and routing.
- 3 TOTE MINIMUM MAKING COST $33 + SHIPPING

MODEL NO.	COLOR	OUTSIDE DIM. L x W x H	INSIDE DIM. L x W x H	WT. (LBS.)	PRICE PER TOTE (MIN. 3)				ADD TO CART	
					3	12	24	48+		
S-133W	White	18 x 13 x 12"	17 1/4 x 12 3/8 x 11 1/8"	2	$11 each any quantity				3	ADD

SOURCE: https://www.uline.com/Product/Detail/S-133W/Totes-Plastic-Storage-Boxes/Space-Age-Totes-18-x-13-x-12-White?pricode=WB0721&gadtype=pla&id=S-133W&gclid=CjwKCAjwmq3kBRB_EiwAJkNDp3Enz8iYkrCYs3rpzgx6Ic8EWclrp_MWDB6BKAIQA9tqKunaPGM52xoC6dgQAvD_BwE&gclsrc=aw.ds

upholstery

Classic

Durable, vinyl based fabrics, Pedigo Classic upholstery is latex-free and California TB-117 approved.

Indicates: Pedigo Classic upholstery and unit testing:

- ● California TB-117



Grey | Steel | Beige | Burgundy | Fairway | Lake Blue | Black

PreFixx® ✓LATEX-FREE

Royal

Environment friendly, Pedigo Royal upholstery is latex-free, PVC-free, California TB-117 approved.

Indicates: Pedigo Royal upholstery and unit testing:

- ○ California TB-117
- ● California TB-117 and TB-133 approved



Glacier | River Rock | Cattail | Basalt | Orchard Plum | Columbia Blue | Raven Black

✓LATEX-FREE ✓PVC-FREE

Above color samples are representations of upholstery materials. Actual colors may vary slightly. Material samples available upon request.

Technical Bulletins The State of California developed a number of testing standards known as Technical Bulletins for the purpose of evaluating the flammability of furniture.

- **CAL TB-117** Flammability test for the filling or padding material of furniture. Tests the flame retardance of resilient filling materials used in upholstered furniture - including the fabric.
- **CAL TB-133** A full-scale fire test of the entire unit including the frame, foam and upholstery.

- **American National Standard for Office Furnishings** This standard is intended to provide manufacturers, specifiers, and users with a common basis for evaluating the safety, durability, and structural adequacy of general-purpose office chairs. For example, load and impact testing.
- **Business & Institutional Furniture Manufacturer's Assoc.** A not-for-profit organization that advocates, informs and develops standards for the North American office and institutional furniture industry.

PreFixx®

Care Instructions

PreFixx® is engineered so that upholstery can be cleaned again and again without showing signs of wear. With easy cleanability, and proven stain and abrasion resistance, PreFixx protective finish can reduce maintenance costs and frequent re-upholstery.

Performance: Offers state-of-the-art resistance against staining, burnishing, abrasion, scuffing and blocking.

Durability: Creates a barrier that resists stains from penetrating to the surface of the vinyl for proven, long-lasting protection. With laboratory-tested stain resistance and improved wear properties, upholstery treated with PreFixx protective finish can retain a "like-new" appearance longer.

Easy Maintenance: Enables most common stains like dirt and smudges to wipe off easily. Many difficult stains like ballpoint ink also can be cleaned with active solvents, such as nail polish remover, without damaging the PreFixx protective finish (when recommended cleaning instructions are followed).

800.822.3501 • FAX 360.696.1700 • www.pedigo-usa.com

4000 SE Columbia Way • Vancouver, Washington 98661

10/18 MM-73



seating

ergo | anesthesia | chrome | surgeon
five series | stainless steel

ergo task chair

(only available in ◯ royal upholstery)

weight capacity rating of 300 lbs.

Pedigo's ergonomically designed task chairs feature pneumatic height adjustment, dual wheel casters, 5-star base, integrated lumbar support, and independent backrest/seat pan height and tilt controls. PVC and latex free.

locking casters option
- 81 Locking Casters - (activated upon standing)



◯ T-580

- 18" x 19" contoured cushioned seat
- Height adjustment (pneumatic) of 17½" to 23¼"
- Easy rolling 2" dual wheel casters
- 25" diameter footprint
- Adjustable backrest
- Adjustable arm rests



◯ T-581

- 18" x 19" contoured cushioned seat
- Height adjustment (pneumatic) of 17½" to 23¼"
- Easy rolling 2" dual wheel casters
- 25" diameter footprint
- Adjustable backrest



◯ T-582

- 18" x 19" contoured cushioned seat
- Height adjustment (pneumatic) of 17½" to 23¼"
- Easy rolling 2" dual wheel casters
- 23" diameter footprint (small)
- Adjustable backrest

specs

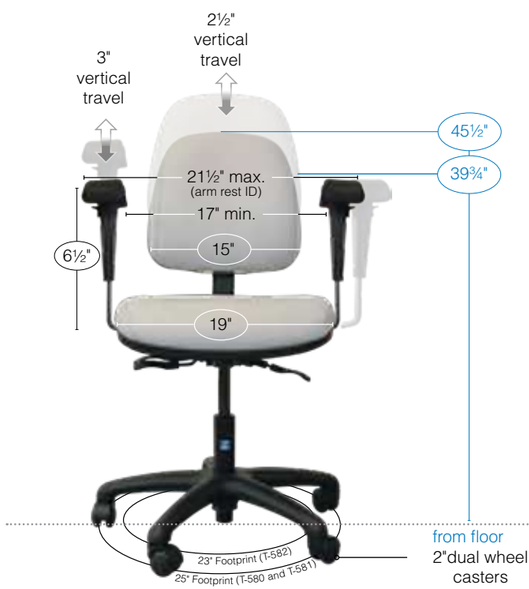



hydraulic surgeon chair

(available in ● classic or ◯ royal upholstery)

weight capacity rating of 300 lbs.

● ◯ P-7000

Hydraulic Surgeon Chairs are ideal for surgery, anesthesiology, ENT and reconstructive procedures. Engineered and constructed using our STERIL-GARD philosophy. STERIL-GARD is the concept and process of manufacturing products to minimize or eliminate any areas where dirt, fluid and bacterial debris can become entrapped. Therefore all Pedigo products are easier to clean, longer lasting, and most importantly - *reduce the transmission of bacteria.*

- Specially contoured seat for added comfort
- Sensafoam body contouring seat and back
- Seat features backrest
- Height adjustable and articulating arm/wrist rests
- 21" diameter base with high grade 3" casters
- Chrome-plated 6-caster base
- Three locking casters
- Adjustable backrest
- Height adjustment (hydraulic) of 20¾" to 28¼" - single pedal, foot-operated





Locking Casters



P-6000

● ◯ P-6000

- 16" round fully padded
- Seat features backrest
- 21" diameter base
- Powder-coated 5-caster base
- High grade 3" casters
- Two locking casters
- Height adjustment (hydraulic) of 22¾" to 30¼" - single pedal, foot-operated



P-6001

options



Procedure Rest
Part#: P-6000-PR



Articulating Arm Rests
Part#: P-6000-D

● ◯ P-6001

with Procedure Rest

- Rotates a full 360 degrees
- Upholstered for comfort
- Special density foam provides comfort and support during long procedures
- 16" round fully padded
- Height adjustment of 24⅜" to 29½"

Part No. P-6000-PR and P-6001

* Seat tilt not available with procedure rest



● ◯ P-526

with Procedure Rest

- Rotates a full 360 degrees
- Upholstered for comfort
- Special density foam provides comfort and support during long procedures
- 14½" round fully padded seat
- Height adjustment of 16¾"to 23¾"

Part No. P-526-PR and P-526-GS

five series

(available in ● classic or ● royal upholstery)

weight capacity rating of 300 lbs.

locking casters option
- 66 Locking Casters - (activated upon standing)
- 66-A Locking Casters - (activated upon sitting)



● P-521-GS ● T-521-GS
- 14½" round fully padded seat with back
- 23½" diameter aluminum base
- 2" dual wheel casters
- Height adjustment (pneumatic) of 19¼" to 23¾"
- Adjustable backrest



● P-526-GS ● T-526-GS
- 14½" round fully padded seat
- 23½" diameter aluminum base
- 2" dual wheel casters
- Height adjustment (pneumatic) of 19¼" to 23¾"



● P-536 ● T-536
- 14" round cushioned seat
- 21½" diameter chrome base
- Easy rolling 2½" casters
- Height adjustment (screw shaft) of 17¾" to 26⅛"

* locking casters option not available



● P-536-GS ● T-536-GS
- 14" cushioned seat
- 21½" diameter chrome base
- Easy rolling 2½" casters
- Height adjustment (pneumatic) of 18¾" to 23½"

* locking casters option not available



● P-551 ● T-551
- 16" x 17" cushioned seat
- 21½" diameter chrome base
- Adjustable back support
- Easy rolling 2½" casters
- Height adjustment (screw shaft) 20⅝" to 29"
- Adjustable backrest

* locking casters option not available



● P-551-GS ● T-551-GS
- 16" x 17" cushioned seat
- 21½" diameter chrome base
- Adjustable back support
- Easy rolling 2½" casters
- Height adjustment (pneumatic) of 19¼" to 24" height
- Adjustable backrest

* locking casters option not available



● P-555-GS ● T-555-GS
- 16" x 17" cushioned seat
- 21½" diameter chrome base
- Adjustable back support
- Easy rolling 2½" casters
- Height adjustment (pneumatic) of 25⅝" to 33"
- Adjustable backrest

* locking casters option not available

ergo task anesthesia chair

(only available in ● royal upholstery)

weight capacity rating of 300 lbs.

Pedigo proudly introduces our NEW ergonomically designed anesthesia chair, the T-583. This chair features pneumatic height adjustment, dual wheel casters, 5-star base, integrated lumbar support and independent backrest/seat pan height tilt controls. PVC and latex free.

locking casters option
- 81 Locking Casters - (activated upon standing)

● T-583
- 18" x 19" contoured cushioned seat
- Pneumatic height adjustment of 24¼" to 34¼"
- Easy rolling 2" dual wheel casters
- Adjustable arm rests
- 25" diameter footprint
- Adjustable backrest

● T-584 (without arm rests)
- 18" x 19" contoured cushioned seat
- Pneumatic height adjustment of 23½" to 33½"
- Easy rolling 2" dual wheel casters
- 25" diameter footprint
- Adjustable backrest



specs





chrome series

(available in ● classic or ● royal upholstery)

weight capacity rating of 300 lbs.

dual wheel locking casters option
- 66 Locking Casters - (activated upon standing)
- 66-A Locking Casters - (activated upon sitting)
- 01-B Adaptor (required for both 66 & 66-A)



● P-36 ● T-36
- 14" round cushioned seat
- 2" double ball bearing casters
- Height adjustment (screw shaft) of 17⅞" to 26¼"



● P-38 ● T-38
- 14" round cushioned seat
- Rubber floor tips
- Height adjustment (screw shaft) of 22" to 34½”

● P-38-W/C ● T-38-W/C
- 2" double ball bearing casters
- Height adjustment (screw shaft) of 24¼" to 36¾"



● P-39 ● T-39
- 14" round cushioned seat
- Rubber floor tips
- Upholstered spring back
- Height adjustment (screw shaft) of 22¾" to 34½”

● P-39-W/C ● T-39-W/C
- 2" double ball bearing swivel casters
- Height adjustment (screw shaft) of 25" to 36¾"



● P-51 ● T-51
- 14" x 15" square cushioned seat
- Upholstered spring back
- 2" double ball bearing casters
- Height adjustment (screw shaft) of 18⅝” to 26¼”



● P-51-R ● T-51-R
- 14" round cushioned seat
- Upholstered spring back
- 2" double ball bearing casters
- Height adjustment (screw shaft) of 18⅝” to 26¼”



● P-55 ● T-55
- Lab stool
- 14" x 15" square cushioned seat
- Upholstered spring back
- Plastic floor glide
- Height adjustment (screw shaft) of 21⅝" to 33⅝"

* locking casters option not available

stainless steel series

(available in ● classic or ● royal upholstery)

weight capacity rating of 300 lbs.

dual wheel locking casters option
- 66 Locking Casters - (activated upon standing)
- 66-A Locking Casters - (activated upon sitting)
- 01-B Adaptor (required for both 66 & 66-A)



P-1037-SS
- 14" round stainless steel contoured seat
- Rubber floor tips
- Height adjustment (screw shaft) of 20⅛" to 32⅜"

P-1037-W/C-SS
- 2" double ball bearing swivel casters
- Height adjustment (screw shaft) of 22½" to 34⅝"



● P-1038-SS ● T-1038-SS
- 14" round cushioned seat
- Rubber floor tips
- Height adjustment (screw shaft) of 22" to 34½"

● P-1038-W/C
● T-1038-W/C
- 2" double ball bearing swivel casters
- Height adjustment (screw shaft) of 24¼" to 36¾"



● P-1039-SS ● T-1039-SS
- 14" round cushioned seat
- Upholstered spring back
- Rubber floor tips
- Height adjustment (screw shaft) of 22¾" to 34½"

● P-1039-W/C
● T-1039-W/C
- 2" double ball bearing swivel casters
- Height adjustment (screw shaft) of 25" to 36¾"



● P-1040-SS ● T-1040-SS
- 14" x 15" cushioned square seat
- Upholstered spring back
- 3" double ball bearing swivel casters
- Height adjustment (screw shaft) of 26" to 37½"

foot-operated

(available in ● classic or ● royal upholstery)

weight capacity rating of 300 lbs.

locking casters option
- 66 Locking Casters - (activated upon standing)
- 66-A Locking Casters - (activated upon sitting)



● P-527-GS ● T-527-GS
- 14½" round fully padded seat
- 23½" diameter aluminum base
- 2" dual wheel casters
- Adjustable backrest
- Height adjustment (pneumatic) of 19¼" to 24½"



● P-528-GS ● T-528-GS
- 14½" round fully padded seat
- 23½" diameter aluminum base
- 2" dual wheel casters
- Height adjustment (pneumatic) of 19¼" to 24½"

upholstery

Classic

Durable, vinyl based fabrics, Pedigo Classic upholstery is latex-free and California TB-117 approved.

Indicates: Pedigo Classic upholstery and unit testing:

- ● California TB-117



Grey | Steel | Beige | Burgundy | Fairway | Lake Blue | Black

PreFixx® ✓LATEX-FREE

Royal

Environment friendly, Pedigo Royal upholstery is latex-free, PVC-free, California TB-117 approved.

Indicates: Pedigo Royal upholstery and unit testing:

- ○ California TB-117
- ● California TB-117 and TB-133 approved



Glacier | River Rock | Cattail | Basalt | Orchard Plum | Columbia Blue | Raven Black

✓LATEX-FREE ✓PVC-FREE

Above color samples are representations of upholstery materials. Actual colors may vary slightly. Material samples available upon request.

Technical Bulletins The State of California developed a number of testing standards known as Technical Bulletins for the purpose of evaluating the flammability of furniture.

- **CAL TB-117** Flammability test for the filling or padding material of furniture. Tests the flame retardance of resilient filling materials used in upholstered furniture - including the fabric.
- **CAL TB-133** A full-scale fire test of the entire unit including the frame, foam and upholstery.

- **American National Standard for Office Furnishings** This standard is intended to provide manufacturers, specifiers, and users with a common basis for evaluating the safety, durability, and structural adequacy of general-purpose office chairs. For example, load and impact testing.
- **Business & Institutional Furniture Manufacturer's Assoc.** A not-for-profit organization that advocates, informs and develops standards for the North American office and institutional furniture industry.

PreFixx®

Care Instructions

PreFixx® is engineered so that upholstery can be cleaned again and again without showing signs of wear. With easy cleanability, and proven stain and abrasion resistance, PreFixx protective finish can reduce maintenance costs and frequent re-upholstery.

Performance: Offers state-of-the-art resistance against staining, burnishing, abrasion, scuffing and blocking.

Durability: Creates a barrier that resists stains from penetrating to the surface of the vinyl for proven, long-lasting protection. With laboratory-tested stain resistance and improved wear properties, upholstery treated with PreFixx protective finish can retain a "like-new" appearance longer.

Easy Maintenance: Enables most common stains like dirt and smudges to wipe off easily. Many difficult stains like ballpoint ink also can be cleaned with active solvents, such as nail polish remover, without damaging the PreFixx protective finish (when recommended cleaning instructions are followed).

800.822.3501 • FAX 360.696.1700 • www.pedigo-usa.com

4000 SE Columbia Way • Vancouver, Washington 98661

10/18 MM-73



seating

ergo | anesthesia | chrome | surgeon
five series | stainless steel

ergo task chair

(only available in ◯ royal upholstery)

weight capacity rating of 300 lbs.

Pedigo's ergonomically designed task chairs feature pneumatic height adjustment, dual wheel casters, 5-star base, integrated lumbar support, and independent backrest/seat pan height and tilt controls. PVC and latex free.

locking casters option
- 81 Locking Casters - (activated upon standing)



◯ T-580

- 18" x 19" contoured cushioned seat
- Height adjustment (pneumatic) of 17½" to 23¼"
- Easy rolling 2" dual wheel casters
- 25" diameter footprint
- Adjustable backrest
- Adjustable arm rests



◯ T-581

- 18" x 19" contoured cushioned seat
- Height adjustment (pneumatic) of 17½" to 23¼"
- Easy rolling 2" dual wheel casters
- 25" diameter footprint
- Adjustable backrest



◯ T-582

- 18" x 19" contoured cushioned seat
- Height adjustment (pneumatic) of 17½" to 23¼"
- Easy rolling 2" dual wheel casters
- 23" diameter footprint (small)
- Adjustable backrest

specs

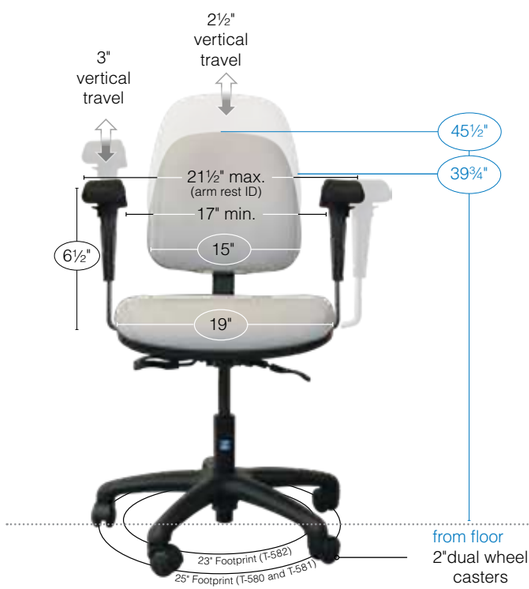



hydraulic surgeon chair

(available in ● classic or ◯ royal upholstery)

weight capacity rating of 300 lbs.

● ◯ P-7000

Hydraulic Surgeon Chairs are ideal for surgery, anesthesiology, ENT and reconstructive procedures. Engineered and constructed using our STERIL-GARD philosophy. STERIL-GARD is the concept and process of manufacturing products to minimize or eliminate any areas where dirt, fluid and bacterial debris can become entrapped. Therefore all Pedigo products are easier to clean, longer lasting, and most importantly - *reduce the transmission of bacteria.*

- Specially contoured seat for added comfort
- Sensafoam body contouring seat and back
- Seat features backrest
- Height adjustable and articulating arm/wrist rests
- 21" diameter base with high grade 3" casters
- Chrome-plated 6-caster base
- Three locking casters
- Adjustable backrest
- Height adjustment (hydraulic) of 20¾" to 28¼" - single pedal, foot-operated





Locking Casters



P-6000

● ◯ P-6000

- 16" round fully padded
- Seat features backrest
- 21" diameter base
- Powder-coated 5-caster base
- High grade 3" casters
- Two locking casters
- Height adjustment (hydraulic) of 22¾" to 30¼" - single pedal, foot-operated



P-6001

options



Procedure Rest
Part#: P-6000-PR



Articulating Arm Rests
Part#: P-6000-D

● ◯ P-6001

with Procedure Rest

- Rotates a full 360 degrees
- Upholstered for comfort
- Special density foam provides comfort and support during long procedures
- 16" round fully padded
- Height adjustment of 24⅜" to 29½"

Part No. P-6000-PR and P-6001

* Seat tilt not available with procedure rest



● ◯ P-526

with Procedure Rest

- Rotates a full 360 degrees
- Upholstered for comfort
- Special density foam provides comfort and support during long procedures
- 14½" round fully padded seat
- Height adjustment of 16¾"to 23¾"

Part No. P-526-PR and P-526-GS

five series

(available in ● classic or ● royal upholstery)

weight capacity rating of 300 lbs.

locking casters option
- 66 Locking Casters - (activated upon standing)
- 66-A Locking Casters - (activated upon sitting)



● P-521-GS ● T-521-GS
- 14½" round fully padded seat with back
- 23½" diameter aluminum base
- 2" dual wheel casters
- Height adjustment (pneumatic) of 19¼" to 23¾"
- Adjustable backrest



● P-526-GS ● T-526-GS
- 14½" round fully padded seat
- 23½" diameter aluminum base
- 2" dual wheel casters
- Height adjustment (pneumatic) of 19¼" to 23¾"



● P-536 ● T-536
- 14" round cushioned seat
- 21½" diameter chrome base
- Easy rolling 2½" casters
- Height adjustment (screw shaft) of 17¾" to 26⅛"

* locking casters option not available



● P-536-GS ● T-536-GS
- 14" cushioned seat
- 21½" diameter chrome base
- Easy rolling 2½" casters
- Height adjustment (pneumatic) of 18¾" to 23½"

* locking casters option not available



● P-551 ● T-551
- 16" x 17" cushioned seat
- 21½" diameter chrome base
- Adjustable back support
- Easy rolling 2½" casters
- Height adjustment (screw shaft) 20⅝" to 29"
- Adjustable backrest

* locking casters option not available



● P-551-GS ● T-551-GS
- 16" x 17" cushioned seat
- 21½" diameter chrome base
- Adjustable back support
- Easy rolling 2½" casters
- Height adjustment (pneumatic) of 19¼" to 24" height
- Adjustable backrest

* locking casters option not available



● P-555-GS ● T-555-GS
- 16" x 17" cushioned seat
- 21½" diameter chrome base
- Adjustable back support
- Easy rolling 2½" casters
- Height adjustment (pneumatic) of 25⅝" to 33"
- Adjustable backrest

* locking casters option not available

ergo task anesthesia chair

(only available in ● royal upholstery)

weight capacity rating of 300 lbs.

Pedigo proudly introduces our NEW ergonomically designed anesthesia chair, the T-583. This chair features pneumatic height adjustment, dual wheel casters, 5-star base, integrated lumbar support and independent backrest/seat pan height tilt controls. PVC and latex free.

locking casters option
- 81 Locking Casters - (activated upon standing)

● T-583
- 18" x 19" contoured cushioned seat
- Pneumatic height adjustment of 24¼" to 34¼"
- Easy rolling 2" dual wheel casters
- Adjustable arm rests
- 25" diameter footprint
- Adjustable backrest

● T-584 (without arm rests)
- 18" x 19" contoured cushioned seat
- Pneumatic height adjustment of 23½" to 33½"
- Easy rolling 2" dual wheel casters
- 25" diameter footprint
- Adjustable backrest



specs





chrome series

(available in ● classic or ● royal upholstery)

weight capacity rating of 300 lbs.

dual wheel locking casters option
- 66 Locking Casters - (activated upon standing)
- 66-A Locking Casters - (activated upon sitting)
- 01-B Adaptor (required for both 66 & 66-A)



● P-36 ● T-36
- 14" round cushioned seat
- 2" double ball bearing casters
- Height adjustment (screw shaft) of 17⅞" to 26¼"



● P-38 ● T-38
- 14" round cushioned seat
- Rubber floor tips
- Height adjustment (screw shaft) of 22" to 34½”

● P-38-W/C ● T-38-W/C
- 2" double ball bearing casters
- Height adjustment (screw shaft) of 24¼" to 36¾"



● P-39 ● T-39
- 14" round cushioned seat
- Rubber floor tips
- Upholstered spring back
- Height adjustment (screw shaft) of 22¾" to 34½”

● P-39-W/C ● T-39-W/C
- 2" double ball bearing swivel casters
- Height adjustment (screw shaft) of 25" to 36¾"



● P-51 ● T-51
- 14" x 15" square cushioned seat
- Upholstered spring back
- 2" double ball bearing casters
- Height adjustment (screw shaft) of 18⅝” to 26¼”



● P-51-R ● T-51-R
- 14" round cushioned seat
- Upholstered spring back
- 2" double ball bearing casters
- Height adjustment (screw shaft) of 18⅝” to 26¼”



● P-55 ● T-55
- Lab stool
- 14" x 15" square cushioned seat
- Upholstered spring back
- Plastic floor glide
- Height adjustment (screw shaft) of 21⅝" to 33⅝"

* locking casters option not available

stainless steel series

(available in ● classic or ● royal upholstery)

weight capacity rating of 300 lbs.

dual wheel locking casters option
- 66 Locking Casters - (activated upon standing)
- 66-A Locking Casters - (activated upon sitting)
- 01-B Adaptor (required for both 66 & 66-A)



P-1037-SS
- 14" round stainless steel contoured seat
- Rubber floor tips
- Height adjustment (screw shaft) of 20⅛" to 32⅜"

P-1037-W/C-SS
- 2" double ball bearing swivel casters
- Height adjustment (screw shaft) of 22½" to 34⅝"



● P-1038-SS ● T-1038-SS
- 14" round cushioned seat
- Rubber floor tips
- Height adjustment (screw shaft) of 22" to 34½"

● P-1038-W/C
● T-1038-W/C
- 2" double ball bearing swivel casters
- Height adjustment (screw shaft) of 24¼" to 36¾"



● P-1039-SS ● T-1039-SS
- 14" round cushioned seat
- Upholstered spring back
- Rubber floor tips
- Height adjustment (screw shaft) of 22¾" to 34½"

● P-1039-W/C
● T-1039-W/C
- 2" double ball bearing swivel casters
- Height adjustment (screw shaft) of 25" to 36¾"



● P-1040-SS ● T-1040-SS
- 14" x 15" cushioned square seat
- Upholstered spring back
- 3" double ball bearing swivel casters
- Height adjustment (screw shaft) of 26" to 37½"

foot-operated

(available in ● classic or ● royal upholstery)

weight capacity rating of 300 lbs.

locking casters option
- 66 Locking Casters - (activated upon standing)
- 66-A Locking Casters - (activated upon sitting)



● P-527-GS ● T-527-GS
- 14½" round fully padded seat
- 23½" diameter aluminum base
- 2" dual wheel casters
- Adjustable backrest
- Height adjustment (pneumatic) of 19¼" to 24½"



● P-528-GS ● T-528-GS
- 14½" round fully padded seat
- 23½" diameter aluminum base
- 2" dual wheel casters
- Height adjustment (pneumatic) of 19¼" to 24½"

FFE - GROUP 11 - NEVERS TABLES, OR EQUAL

1401	CONFERENCE TABLE, 144"L X 54"W
Manufacturer:	NEVERS
Model:	XRTC1/TC1/14454 TABLE TOP - R/BB5/14454 TABLE BASE WITH R/BX6 PLINTH
Finish:	WILSONART LAMINATE TOP: WHITE & WILSONART 7949K-18 ASIAN NIGHT 8" LAMINATE INSET STRIPE ON TOP (STRIPE RUNS THE LENGTH OF THE TABLE); PLINTH FOR BASE: COLOR SILVER; POWER CENTER: COLOR SILVER
Upholstery:	N/A
Dimensions:	54''W x 144''L x 29"H
Approved Equal:	
Specification:	AMERICANA, LAMINATE RECTANGLE TABLE TOP WITH 8" LAMINATE INSET, 1 3/16 THICK ONE PIECE TOP WITH (2) 4" PANEL BASE SETS (EACH BASE SET RECEIVES AN ACCESS DOOR FOR POWER AS REQUIRED) WITH SILVER PLINTH BASE & 9"H. BEAMS & LEVELERS, EDGE PROFILE- AL LINEAL BEVEL EDGE. POWER FOR TABLE: R/PC10/AA/02 POWER CENTER 10, INCLUDES (2) POWER UNITS, EACH CONTAIN (2) ELECTRICAL OUTLETS AND (1) EXTERNAL, SIMPLEX RECEPTACLE BOTTOM OF UNIT, NON-SEQUENTIAL DAISY CHAINING UP TO 10 UNITS PER CIRCUIT WITH CORDED PLUG AND UP TO 20 UNITS WITH HARDWIRE INFEED HINGED TOP. 6' GROUNDED CORD WITH PLUG INFEED. UL LISTED, CASA CERTIFIED, ETL AND CETLUS CERTIFIED. INCLUDE R/PWR/CUTOUT FOR CUSTOMER SUPPLIED POWER UNIT IN CENTER OF TABLE
Warranty:	10 YEAR





Table Top Laminate: White Stripe and Base Laminate: Wilsonart, Asian Night, 7949K-18



Metal Color: Silver

Furniture Specification 1/31/20

MEDICAL ACADEMIC BUILDING FURNITURE AND EQUIPMENT PACKAGE

FFE - GROUP 11 - NEVERS TABLES, OR EQUAL

1402	CONFERENCE TABLE, 144”L X 54"W
Manufacturer:	NEVERS
Model:	XRTB1/14454 TABLE TOP - R/BB5/14454/ TABLE BASE WITH R/BX6 PLINTH
Finish:	WILSONART LAMINATE 7949K-18 ASIAN NIGHT; PLINTH FOR BASE: COLOR SILVER
Upholstery:	N/A
Dimensions:	144”L X 54"W x 29”H
Approved Equal:	
Specification:	AMERICANA, LAMINATE RECTANGLE TABLE TOP, 1 3/16 THICK ONE PIECE TOP WITH (2) 4” PANEL BASE SETS (EACH BASE SET RECEIVES AN ACCESS DOOR FOR POWER AS REQUIRED) WITH SILVER PLINTH BASE & 9”H. BEAMS & LEVELERS, EDGE PROFILE-AL LINEAL BEVEL EDGE, POWER FOR TABLE: R/PC10/AA/01 POWER CENTER 10, INCLUDES (1) POWER UNITS, EACH CONTAINS (2) ELECTRICAL OUTLETS AND (1) EXTERNAL, SIMPLEX RECEPTACLE BOTTOM OF UNIT NON-SEQUENTIAL DAISY CHAINING UP TO 10 UNITS PER CIRCUIT WITH CORDED PLUG AND UP TO 20 UNITS WITH HARDWIRE INFEED. HINGED TOP. 6’ GROUNDED CORD WITH PLUG INFEED. UL LISTED, CASA CERTIFIED, ETL AND CETLUS CERTIFIED. INCLUDE R/PWR/CUTOUT FOR CUSOMER SUPPLIED POWER UNIT IN CENTER OF TABLE
Warranty:	10 YEAR WARRANTY





Table Top Laminate & Base Laminate: Wilsonart, Asian Night, 7949K-18



Metal Color: Silver

Room: 3027 CONFERENCE ROOM, 3 FACULTY (EXECUTIVE AREA) Quantity: 1

Total Items: 1

Furniture Specification 1/31/20

MEDICAL ACADEMIC BUILDING FURNITURE AND EQUIPMENT PACKAGE

FFE - GROUP 11 - NEVERS TABLES, OR EQUAL

1402.A	CUSTOM CONFERENCE TABLE, 108”L X 48"W
Manufacturer:	NEVERS
Model:	XRTB1/10848 TABLE TOP - R/BB5/10848 TABLE BASE WITH R/BX6 PLINTH
Finish:	WILSONART LAMINATE 7957K-38 ZANZIBAR FOR TOP WITH WILSONART 7949K-18 ASIAN NIGHT BASES; PLINTH FOR BASE: COLOR SILVER
Upholstery:	N/A
Dimensions:	108”L X 48"W X 29”H
Approved Equal: Specification:	AMERICANA, LAMINATE RECTANGLE TABLE TOP, 1 3/16 THICK ONE PIECE TOP WITH (2) 4” PANEL BASE SETS (EACH BASE SET RECEIVES AN ACCESS DOOR FOR POWER AS REQUIRED) WITH SILVER PLINTH BASE & 9”H. BEAMS & LEVELERS, EDGE PROFILE-AL LINEAL BEVEL EDGE, POWER FOR TABLE: R/PC10/AA/01 POWER CENTER 10, INCLUDES (1) POWER UNITS, EACH CONTAINS (2) ELECTRICAL OUTLETS AND (1) EXTERNAL, SIMPLEX RECEPTACLE BOTTOM OF UNIT NON-SEQUENTIAL DAISY CHAINING UP TO 10 UNITS PER CIRCUIT WITH CORDED PLUG AND UP TO 20 UNITS WITH HARDWIRE INFEED. HINGED TOP. 6’ GROUNDED CORD WITH PLUG INFEED. UL LISTED, CASA CERTIFIED, ETL AND CETLUS CERTIFIED. INCLUDE R/PWR/CUTOUT FOR CUSOMER SUPPLIED POWER UNIT IN CENTER OF TABLE
Warranty:	10 YEAR WARRANTY





Table Top Laminate & Base Laminate: Wilsonart, Asian Night, 7949K-18



Metal Color: Silver

Room: 3001	CONFERENCE ROOM, 1 FACULTY (NORTH CENTRAL)	Quantity: 1
Room: 3039	CONFERENCE ROOM, SS	Quantity: 1

Total Items: 2

Furniture Specification 1/31/20

MEDICAL ACADEMIC BUILDING FURNITURE AND EQUIPMENT PACKAGE

FFE - GROUP 11 - NEVERS TABLES, OR EQUAL

1402.B	CUSTOM CONFERENCE TABLE, 144”L X 42"W
Manufacturer:	NEVERS
Model:	XRTB1/14442TABLE TOP - R/BB5/14442 TABLE BASE WITH R/BX6 PLINTH
Finish:	WILSONART LAMINATE 7957K-38 ZANZIBAR FOR TOP WITH WILSONART 7949K-18 ASIAN NIGHT BASES; PLINTH FOR BASE: COLOR SILVER
Upholstery:	N/A
Dimensions:	144”L x 42"W x 29”H
Approved Equal: Specification:	AMERICANA, LAMINATE RECTANGLE TABLE TOP, 1 3/16 THICK ONE PIECE TOP WITH (2) 4” PANEL BASE SETS (EACH BASE SET RECEIVES AN ACCESS DOOR FOR POWER AS REQUIRED) WITH SILVER PLINTH BASE & 9”H. BEAMS & LEVELERS, EDGE PROFILE-AL LINEAL BEVEL EDGE, POWER FOR TABLE: R/PC10/AA/01 POWER CENTER 10, INCLUDES (1) POWER UNITS, EACH CONTAINS (2) ELECTRICAL OUTLETS AND (1) EXTERNAL, SIMPLEX RECEPTACLE BOTTOM OF UNIT NON-SEQUENTIAL DAISY CHAINING UP TO 10 UNITS PER CIRCUIT WITH CORDED PLUG AND UP TO 20 UNITS WITH HARDWIRE INFEED. HINGED TOP. 6’ GROUNDED CORD WITH PLUG INFEED. UL LISTED, CASA CERTIFIED, ETL AND CETLUS CERTIFIED. INCLUDE R/PWR/CUTOUT FOR CUSOMER SUPPLIED POWER UNIT IN CENTER OF TABLE
Warranty:	10 YEAR WARRANTY





Table Top Laminate & Base Laminate: Wilsonart, Asian Night, 7949K-18



Metal Color: Silver

Room: 3108 CONFERENCE ROOM, 2 FACULTY (NORTH) Quantity: 1

Total Items: 1

Furniture Specification 1/31/20

MEDICAL ACADEMIC BUILDING FURNITURE AND EQUIPMENT PACKAGE

FFE - GROUP 11 - NEVERS TABLES, OR EQUAL

1402.C	CUSTOM CONFERENCE TABLE, 120'L X 42"W
Manufacturer:	NEVERS
Model:	XRTB1/12042 TABLE TOP - R/BB5/12042TABLE BASE WITH R/BX6 PLINTH
Finish:	WILSONART LAMINATE 7957K-38 ZANZIBAR FOR TOP WITH WILSONART 7949K-18 ASIAN NIGHT BASES; PLINTH FOR BASE: COLOR SILVER
Upholstery:	N/A
Dimensions:	120'L x 42"W x 29"H
Approved Equal: Specification:	AMERICANA, LAMINATE RECTANGLE TABLE TOP, 1 3/16 THICK ONE PIECE TOP WITH (2) 4" PANEL BASE SETS (EACH BASE SET RECEIVES AN ACCESS DOOR FOR POWER AS REQUIRED) WITH SILVER PLINTH BASE & 9"H. BEAMS & LEVELERS, EDGE PROFILE-AL LINEAL BEVEL EDGE, POWER FOR TABLE: R/PC10/AA/01 POWER CENTER 10, INCLUDES (1) POWER UNITS, EACH CONTAINS (2) ELECTRICAL OUTLETS AND (1) EXTERNAL, SIMPLEX RECEPTACLE BOTTOM OF UNIT NON-SEQUENTIAL DAISY CHAINING UP TO 10 UNITS PER CIRCUIT WITH CORDED PLUG AND UP TO 20 UNITS WITH HARDWIRE INFEED. HINGED TOP. 6' GROUNDED CORD WITH PLUG INFEED. UL LISTED, CASA CERTIFIED, ETL AND CETLUS CERTIFIED. INCLUDE R/PWR/CUTOUT FOR CUSOMER SUPPLIED POWER UNIT IN CENTER OF TABLE
Warranty:	10 YEAR WARRANTY





Table Top Laminate & Base Laminate: Wilsonart, Asian Night, 7949K-18



Metal Color: Silver

Room: 2016 STUDENT SENATE OFFICE Quantity: 1

Total Items: 1

Furniture Specification 1/31/20

MEDICAL ACADEMIC BUILDING FURNITURE AND EQUIPMENT PACKAGE

FFE - GROUP 11 - NEVERS TABLES, OR EQUAL

1402.D	CUSTOM CONFERENCE TABLE, 108’L x 42"W
Manufacturer:	NEVERS
Model:	XRTB1/10842TABLE TOP - R/BB5/10842 TABLE BASE WITH R/BX6 PLINTH
Finish:	WILSONART LAMINATE 7957K-38 ZANZIBAR FOR TOP WITH WILSONART 7949K-18 ASIAN NIGHT BASES; PLINTH FOR BASE: COLOR SILVER
Upholstery:	N/A
Dimensions:	108’L x 42"W x 29”H
Approved Equal: Specification:	AMERICANA, LAMINATE RECTANGLE TABLE TOP, 1 3/16 THICK ONE PIECE TOP WITH (2) 4” PANEL BASE SETS (EACH BASE SET RECEIVES AN ACCESS DOOR FOR POWER AS REQUIRED) WITH SILVER PLINTH BASE & 9”H. BEAMS & LEVELERS, EDGE PROFILE-AL LINEAL BEVEL EDGE, POWER FOR TABLE: R/PC10/AA/01 POWER CENTER 10, INCLUDES (1) POWER UNITS, EACH CONTAINS (2) ELECTRICAL OUTLETS AND (1) EXTERNAL, SIMPLEX RECEPTACLE BOTTOM OF UNIT NON-SEQUENTIAL DAISY CHAINING UP TO 10 UNITS PER CIRCUIT WITH CORDED PLUG AND UP TO 20 UNITS WITH HARDWIRE INFEED. HINGED TOP. 6’ GROUNDED CORD WITH PLUG INFEED. UL LISTED, CASA CERTIFIED, ETL AND CETLUS CERTIFIED. INCLUDE R/PWR/CUTOUT FOR CUSOMER SUPPLIED POWER UNIT IN CENTER OF TABLE
Warranty:	10 YEAR WARRANTY





Table Top Laminate & Base Laminate: Wilsonart, Asian Night, 7949K-18



Metal Color: Silver

Room: 2055	CLINICAL EXAM DEBRIEF	Quantity: 1
Room: 2056	CLINICAL EXAM PREBRIEF	Quantity: 1

Total Items: 2

Furniture Specification 1/31/20

MEDICAL ACADEMIC BUILDING FURNITURE AND EQUIPMENT PACKAGE

FFE - GROUP 11 - NEVERS TABLES, OR EQUAL

1402.E	CUSTOM CONFERENCE TABLE, 132”L x 42"W
Manufacturer:	NEVERS
Model:	XRTB1/13242 TABLE TOP - R/BB5/13242 TABLE BASE WITH R/BX6 PLINTH
Finish:	WILSONART LAMINATE 7957K-38 ZANZIBAR FOR TOP WITH WILSONART 7949K-18 ASIAN NIGHT BASES; PLINTH FOR BASE: COLOR SILVER
Upholstery:	N/A
Dimensions:	132”L x 42"W x 29”H
Approved Equal:	
Specification:	AMERICANA, LAMINATE RECTANGLE TABLE TOP, 1 3/16 THICK ONE PIECE TOP WITH (2) 4” PANEL BASE SETS (EACH BASE SET RECEIVES AN ACCESS DOOR FOR POWER AS REQUIRED) WITH SILVER PLINTH BASE & 9”H. BEAMS & LEVELERS, EDGE PROFILE-AL LINEAL BEVEL EDGE, POWER FOR TABLE: R/PC10/AA/01 POWER CENTER 10, INCLUDES (1) POWER UNITS, EACH CONTAINS (2) ELECTRICAL OUTLETS AND (1) EXTERNAL, SIMPLEX RECEPTACLE BOTTOM OF UNIT NON-SEQUENTIAL DAISY CHAINING UP TO 10 UNITS PER CIRCUIT WITH CORDED PLUG AND UP TO 20 UNITS WITH HARDWIRE INFEED. HINGED TOP. 6’ GROUNDED CORD WITH PLUG INFEED. UL LISTED, CASA CERTIFIED, ETL AND CETLUS CERTIFIED. INCLUDE R/PWR/CUTOUT FOR CUSOMER SUPPLIED POWER UNIT IN CENTER OF TABLE
Warranty:	10 YEAR WARRANTY





Table Top Laminate & Base Laminate: Wilsonart, Asian Night, 7949K-18



Metal Color: Silver

Room: 2066 SP LOUNGE Quantity: 1

Total Items: 1

FFE - GROUP 15- JASPER STORAGE, TABLES & SEATING OR EQUAL

1412.E	ROUND TABLE
Manufacturer:	JASPER
Model:	VL60TT / VS38X4 / EC13
Finish:	SEE BELOW
Upholstery:	N/A
Dimensions:	60” DIA X 30”H
Approved Equal:	
Specification:	VISION 72” DIAMETER CONFERENCE TABLE TOP; HIGH PRESSURE LAMINATE WITH 38D X 38W METAL X4 BASE ADD POWER & DATA GROMMET
Warranty:	JSI WARRANTS, TO THE ORIGINAL PURCHASER THAT EACH PIECE OF FURNITURE WILL BE FREE FROM DEFECTS IN WORKMANSHIP, GIVEN NORMAL USE FOR A PERIOD OF FIFTEEN (15) YEARS





High Pressure Laminate
Top Surface : Vintage

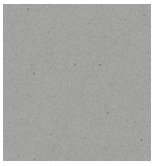

Base : Stardust Silver

Room: 3091 RH & CSI CONFERENCE Quantity: 1

Total Items: 1

Furniture Specification 1/31/20

MEDICAL ACADEMIC BUILDING FURNITURE AND EQUIPMENT PACKAGE

FFE - GROUP 12 - KI **TABLES**, OR EQUAL

1424.A	CLASSROOM TABLE
Manufacturer:	KI
Model:	SZ1801 - S16146227?
Finish:	LAMINATE: WILSONART,FLORENCE WALNUT 993-38; 74P EDGE BAND TO MATCH WILSONART, FLORENCE WALNUT 993-38; GROMMET & POWER MODULE COLOR: BLACK
Upholstery:	N/A
Dimensions:	72''W 30''H
Approved Equal:	
Specification:	SERENADE SMART TABLE W/ CYLINDER BASE; 72" DIAMETER ROUND LAMINATE TOP W/ 74P EDGE; 1 PIECE TOP W/ LAMINATE SEAM; CENTER GROMMET, RECTANGULAR FLIP TOP 46-0881.XX; (3) POWER-UP MODULES W/ 9 FT. CORD; 30" DIAMETER LAMINATE DRUM BASE W/ ACCESS PANEL
Warranty:	LIFETIME WARRANTY

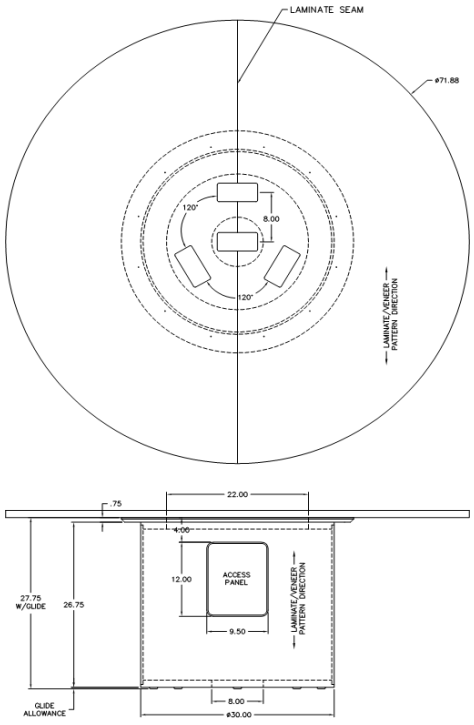



Laminate Wilsonart, Florence Walnut: 7993-38



Grommet & Power Module: Black

Furniture Specification 1/31/20

MEDICAL ACADEMIC BUILDING FURNITURE AND EQUIPMENT PACKAGE

FFE - GROUP 12 - KI TABLES, OR EQUAL

1424.B	CLASSROOM TABLE
Manufacturer:	KI
Model:	CUSTOM
Finish:	WILSONART LAMINATE: FLORENCE WALNUT; GROMMET & POWER MODULE COLOR: BLACK
Upholstery:	N/A
Dimensions:	84''DIAMETER, 30''H
Approved Equal:	
Specification:	SERENADE SMART TABLE W/ CYLINDER BASE; 84" DIAMETER ROUND LAMINATE TOP W/ 74P EDGE; 1 PIECE TOP W/ LAMINATE SEAM; CENTER GROMMET, RECTANGULAR FLIP TOP 46-0881.XX; (3) POWER-UP MODULES W/ 9 FT. CORD; 30" DIAMETER LAMINATE DRUM BASE W/ ACCESS PANEL
Warranty:	LIFETIME WARRANTY

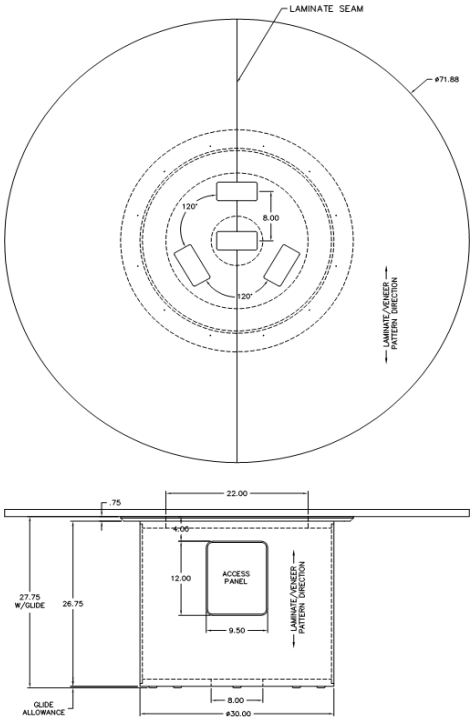



Laminate Wilsonart,
Florence Walnut: 7993-38



Grommet & Power
Module: Black



SEVEN

FLIP TABLES

watson

RELENTLESSLY SIMPLE

Seven Flip tables provide highly robust worksurfaces that can be flipped and nested to instantly repurpose any room. The integrated design includes a proprietary flip mechanism, cable management and limitless power options.









ENDLESS POSSIBILITIES

A smart selection of worksurface shapes, sizes and base styles ensure that Seven Flip tables work for your team, on your terms.

LIFETIME WARRANTY

Seven Flip tables are built for high-volume use. The proprietary roller bearing lock mechanism has been rigorously tested and is warrantied for life.

SPACE SAVER

The best-in-class nesting footprint minimizes storage space - for those in-between times when they aren't being used.



BALANCED AND EFFORTLESS

Designed for function, engineered for strength, and built for durability, Seven Flip tables are a lasting asset.



The optional Modesty panel self centers when tilted and may be quickly removed without tools.

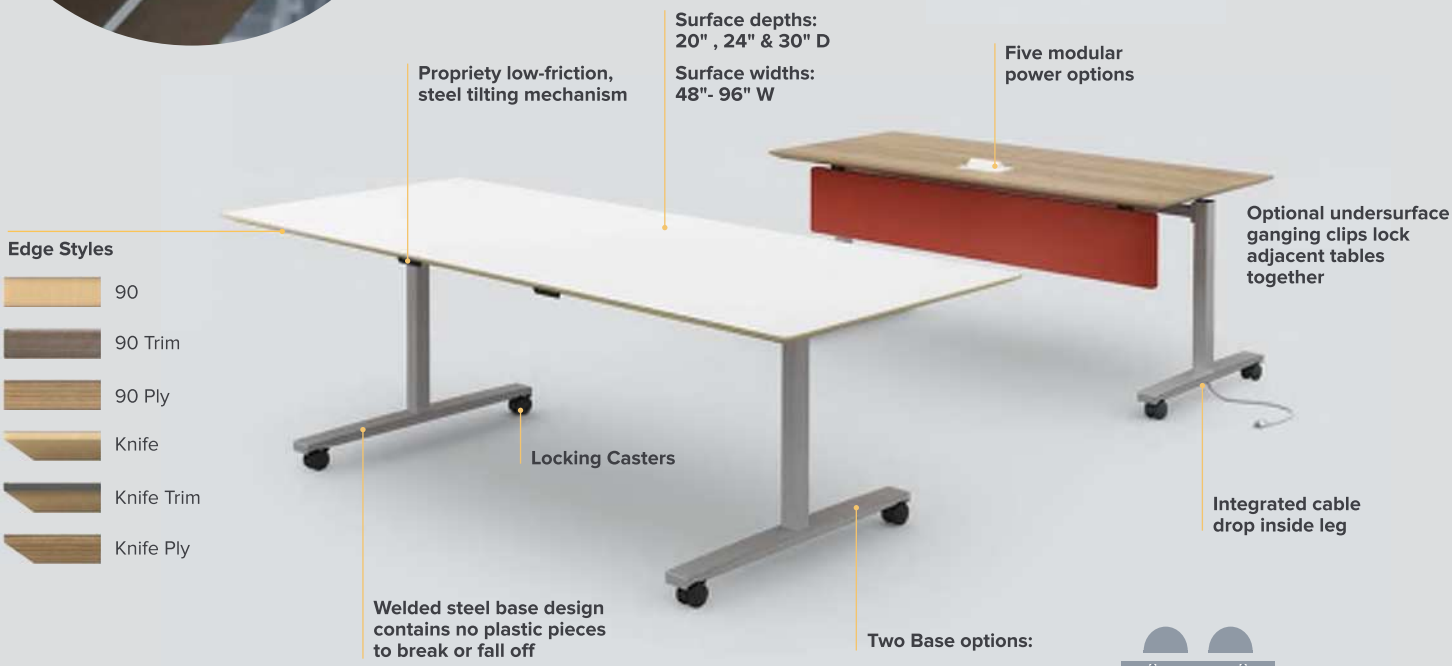

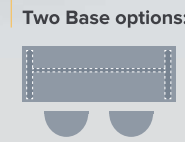

Full Base provides ample cross-table seating for theater-style training.

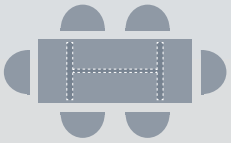

Inset Base provides maximum perimeter seating.



CONVENIENCE POWER

There are five standard configuration options for power and data and preconfigured cutouts are available for all compatible Byrne power units.



INTEGRATED CABLE DROP

Power infeeds cleanly route through the leg to minimize visual clutter and eliminate tripping hazards.

Seven Flip Tables Work For Your Team.

9AM THEATER KEYNOTE



KIT OF PARTS

- 6 Rectangles
- 6 Trapezoids
- 3 Etch Boards

12PM COLLABORATIVE BREAKOUT



KIT OF PARTS

- 6 Rectangles
- 6 Trapezoids
- 3 Etch Boards

3PM ROUNDTABLE DEBRIEF



KIT OF PARTS

- 6 Rectangles
- 6 Trapezoids
- 3 Etch Boards



watson

26246 Twelve Trees Lane NW, Poulsbo, WA 98370
800.426.1202 **watsonfurniture.com**

©2016 WATSON. ALL RIGHTS RESERVED. NOV 2016

DALLAS MIDWEST
A National Business Furniture Company

8OO-527-2417



In Stock

Adjustable Height Folding Table 36x96 Honeycomb Top

Brand: KI Furniture

VItem No: D41545

$275 List: $384

Table Top Colors



Frame Colors

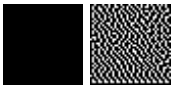

PRODUCT LINE: TABLES	QUOTE / SALES ORDER: Q123568	REV.	DESCRIPTION	DATE	DRAWN BY
DESCRIPTION: LAYOUT			RELEASED FOR QUOTE	3/8/19	RF
DATE: 3/8/19	DRAWING NO.: SP-33472-CX CAD-12	A	Revised # of seats, revised T10 to ADA table, added standing table T11	4/11/19	BM
CAD FILE: SP-33472-CX CAD.dwg	UNITS: INCHES	B			
		C			
		D			
		E			
		F			
DRAWN BY: R FLEMING	REVIEWED BY C.S. ORDER ENTRY - PRINT NAME	FOR QUOTING PURPOSES		NOT TO SCALE	

CONCEPT DRAWING ONLY. DO NOT RELEASE FOR PRODUCTION

TOP/PLAN VIEW

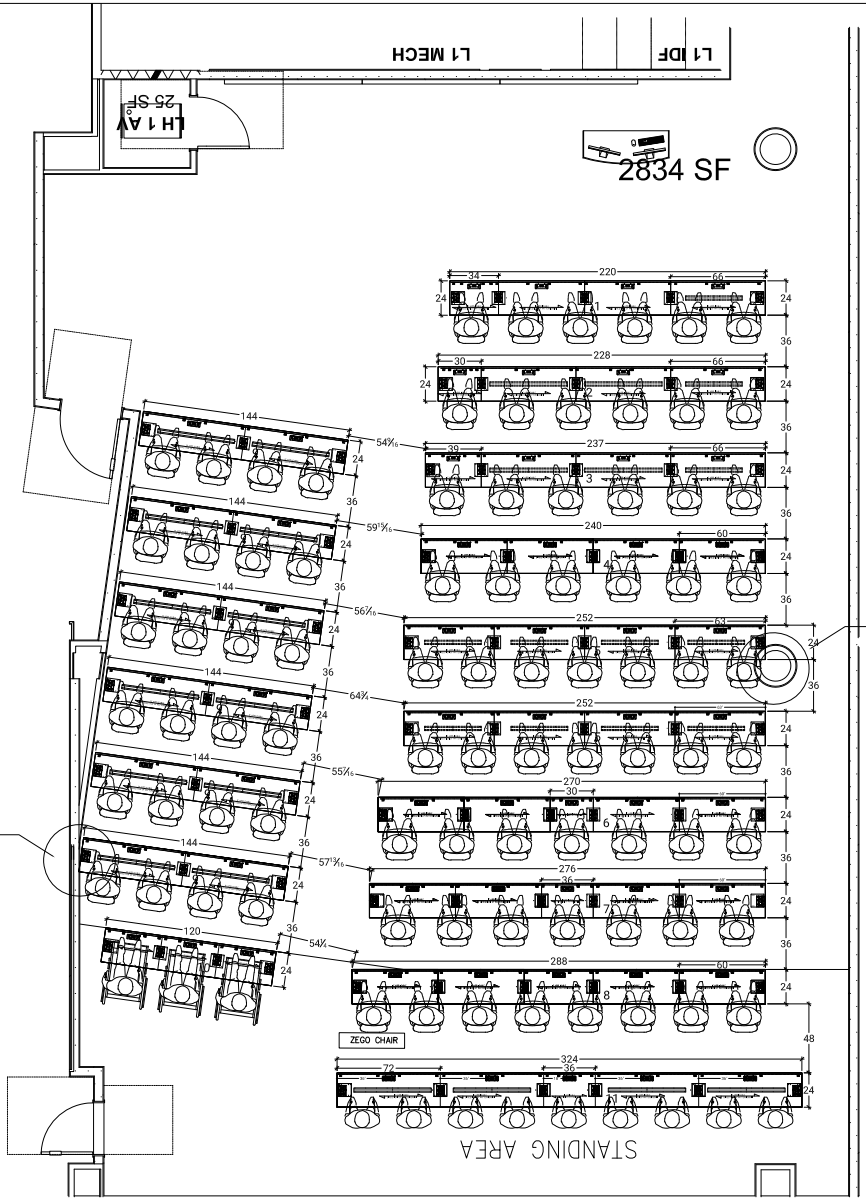

FRONT VIEW

* 17 TABLES
  * 16 SEATED TABLES
    -10 DIFFERENT TABLES
  * 1 STANDING TABLE

* 96 SEATS
  -84 SEATS
  -3 ADA SEATS
  -9 PERSON STANDING ROOM AT 36" SPACING

CUSTOMER VIEWED AND SIGNED OFF

CUSTOMER DATE

SPEC FURNITURE 165 CITY VIEW DRIVE, TORONTO, ON, CANADA, M9W 5B1 T: 416.246.5550 F: 416.246.5549

SPEC FURNITURE INC. claims proprietary right to the material disclosed hereon. This drawing and/or technical information is the property of SPEC FURNITURE INC. and is issued in confidence for use only as authorized, and may not be reproduced or described or shown without written permission from SPEC FURNITURE INC.

1424C

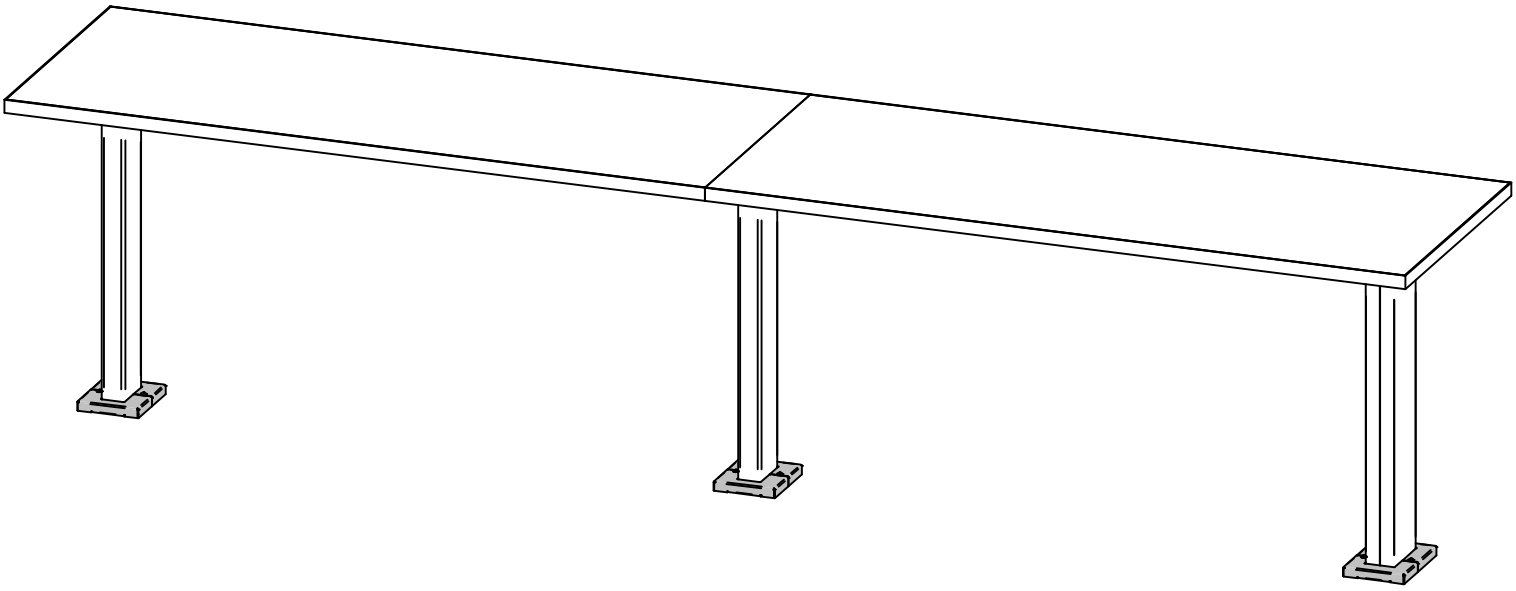

MANHATTAN

Floor Mounted Cover Plates

1424C

NOTE: Mount bases to floor prior to cover plate assembly.
Hardware for floor mounting is not provided by Spec.

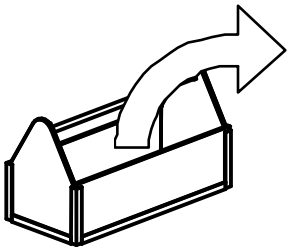



#2

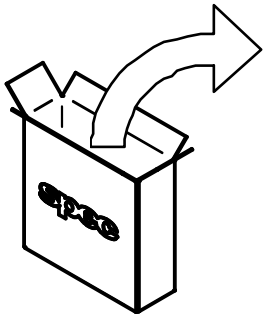

FOR RECTANGULAR POST LEGS:

STL-0565
Rectangular Post Leg Cover Plate

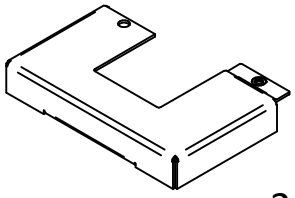

x2

HDW-1018
10-32 x 3/8" Cover Plate Screw



x2

FOR POST LEGS WITH RECTANGULAR VERTICAL WIRE MANAGER:

STL-0562
RVWM Cover Plate - Small

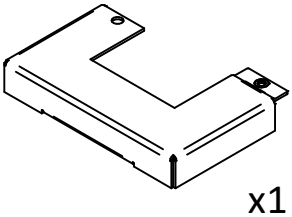

x1

STL-0563
RVWM Cover Plate - Large

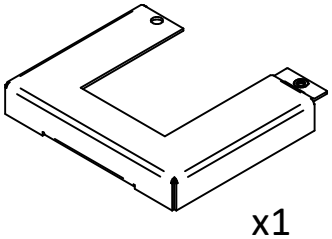

x1

HDW-1018
10-32 x 3/8" Cover Plate Screw



x2

Note: Do not over-tighten fasteners.

NOTE: Mount bases to floor prior to assembly. Hardware for floor mounting is not provided by Spec.

1

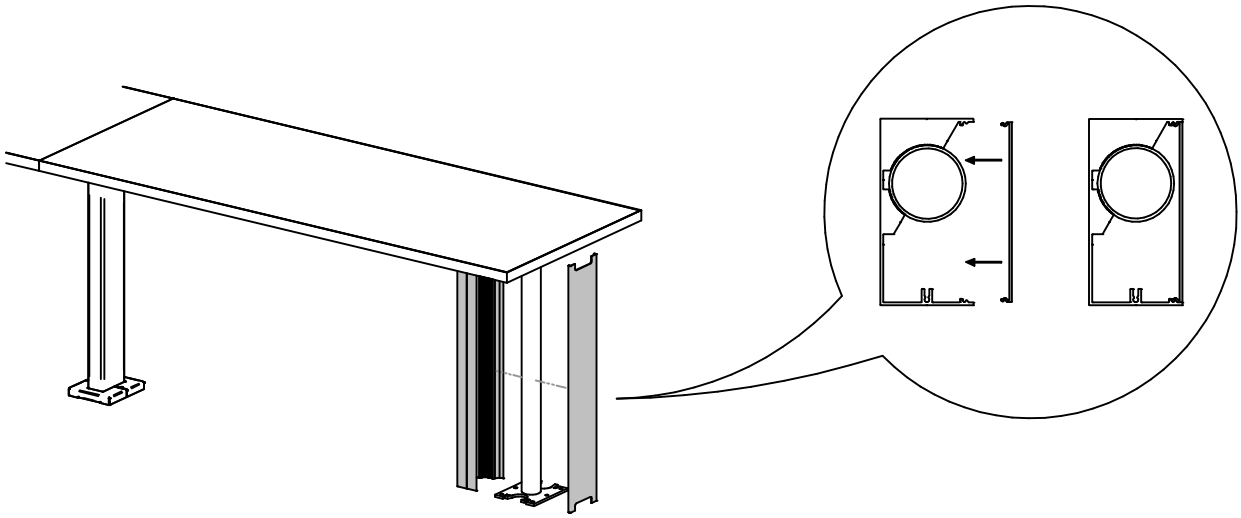

FOR POST LEGS WITH RECTANGULAR VERTICAL WIRE MANAGER:
attach Rectangular Vertical Wire Managers first.

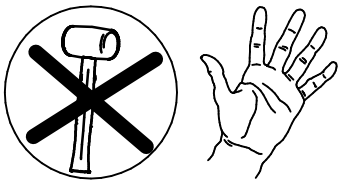

2

POST LEGS WITH RECTANGULAR VERTICAL WIRE MANAGER

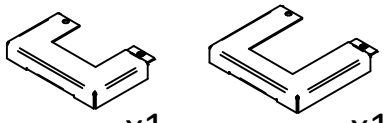

x1 x1

RECTANGULAR POST LEGS

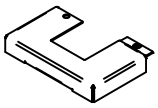

x2

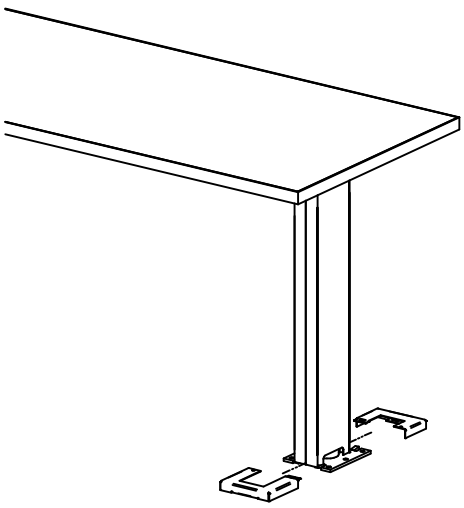

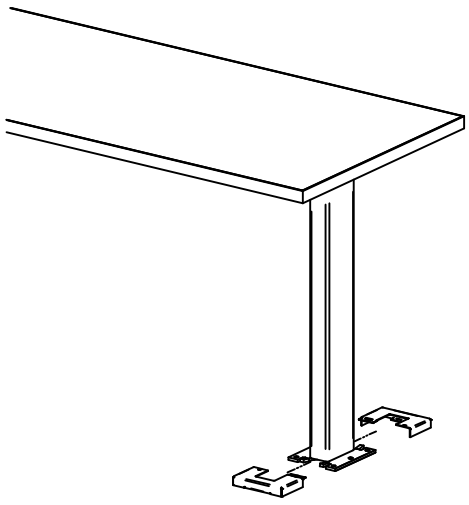

3

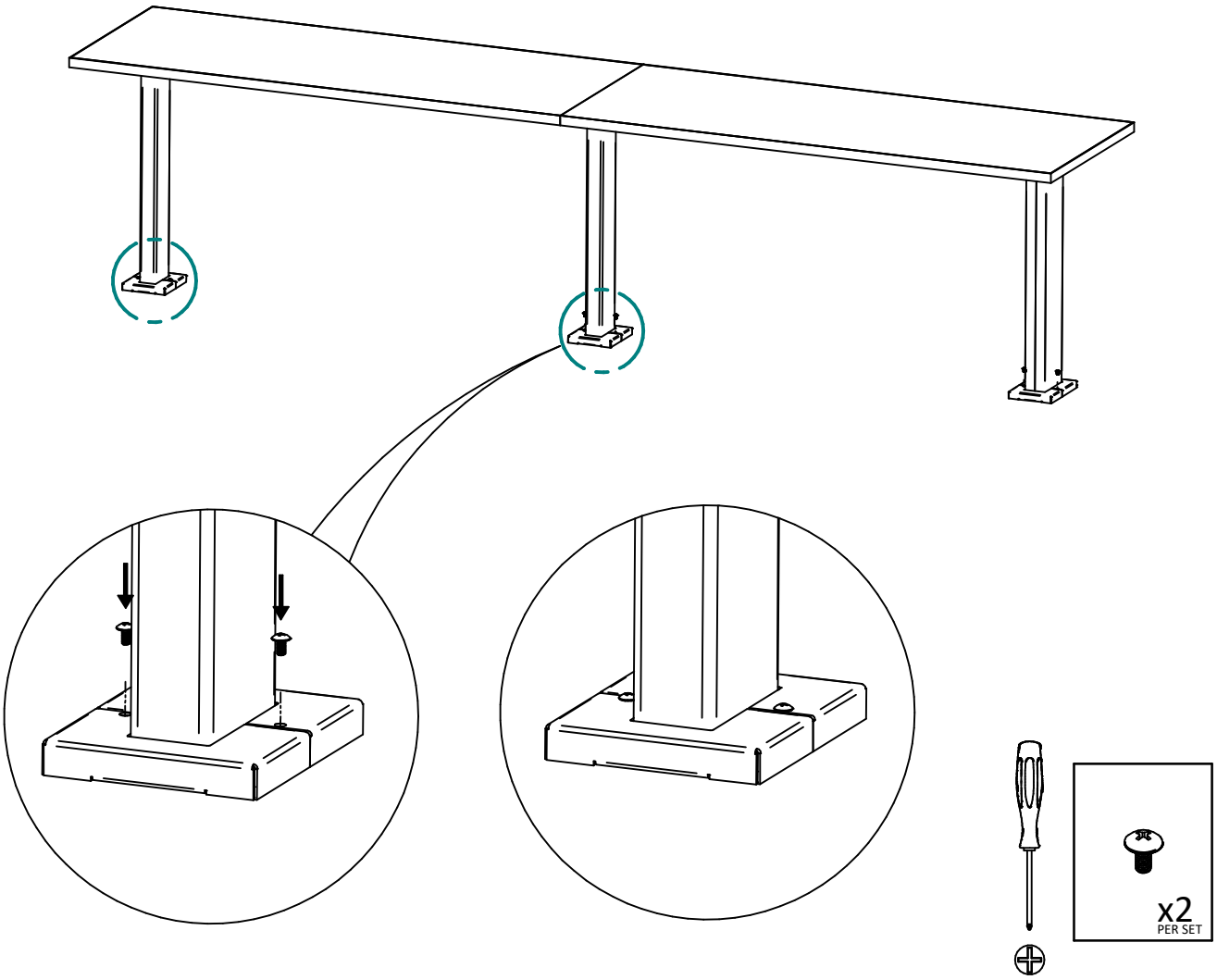

Spec Furniture Inc.
165 City View Drive, Toronto ON, M9W 5B1
P: 416.246.5540 | F: 416.246.5547
E: specit@specfurniture.com | specfurniture.com

1424C

SPECIFICATION SHEET AND ORDERING INFORMATION

ELECTRI-CABLE ASSEMBLIES







Specifications

- Recommended Table Cutout for Villa Grommet: 3.00"x 5.25"
- Minimum Table Thickness for Villa Grommet: 1.00"
- Grommet finishes include: Black, Silver, Gloss White, Stainless Steel, and Clear Brushed Aluminum
- Standard cord lengths available: 36", 72", and 108"
- Power bases are UL or ETL certified

VILLA™ SINGLE CIRCUIT CORDED SERIES

NOW with USB!

The Villa Single Circuit Series is a flexible two part system consisting of a Power Base which is mounted beneath the worksurface and a selection of grommets allowing customization of the table top. Our unique convenience receptacle, located on the power base, provides easy access for meeting various ancillary power requirements. Optional 2.1 Amp USB charging ports now charge your favorite devices while in use. Numerous power base and grommet options are available making the Villa Series the most flexible power unit available.

Ordering information

Part number	Description
Villa Power Bases	
VIL-C-U-D-B-Length*	2 Power Receptacles, 2 2.1Amp charging ports, and 2 RJ45 Cat 6 connectors, power cord with molded 3 pronged plug, black finish
VIL-C-U-D-S- Length*	2 Power Receptacles, 2 2.1Amp charging ports, and 2 RJ45 Cat 6 connectors, power cord with molded 3 pronged plug, silver finish
VIL-C-U-DKOB- Length*	2 Power Receptacles, 2 2.1Amp charging ports, and 2 knockouts for RJ45 connectors, power cord with molded 3 pronged plug, black finish
VIL-C-U-DKOS- Length*	2 Power Receptacles, 2 2.1Amp charging ports, and 2 knockouts for RJ45 connectors, power cord with molded 3 pronged plug, silver finish
VIL-C-DKO-B-Length*	2 Power Receptacles and 2 knockouts for RJ45 connectors, black finish
VIL-C-DKO-S-Length*	2 Power Receptacles and 2 knockouts for RJ45 connectors, silver finish
VIL-C-D-B-Length*	2 Power Receptacles and 2 RJ45 Cat 6 connectors, power cord with molded 3 pronged plug, and black finish
VIL-C-D-S-Length*	2 Power Receptacles and 2 RJ45 Cat 6 connectors, power cord with molded 3 pronged plug, and silver finish

* Cord lengths available are 36", 72", and 108". Pricing is standard for all 3 cord lengths.

Villa Grommets

FLUSH STYLE		LIFT STYLE	
VIL-GROM-F-AL	Brushed Aluminum	VIL-GROM-L-B	Black
VIL-GROM-F-SS	Stainless Steel	VIL-GROM-L-S	Silver
VIL-GROM-F-S	Silver	VIL-GROM-L-W	Gloss White
VIL-GROM-F-B	Black		
VIL-GROM-F-W	Gloss White		

Each Villa comes with 4 cable clamps with screws and 6 power base mounting screws.
Each Villa Grommet comes with 2 mounting screws.

Product Dimensions

VILLA POWER BASE WITH DATA SHOWN
3.11" x 8.63" x 2.25"

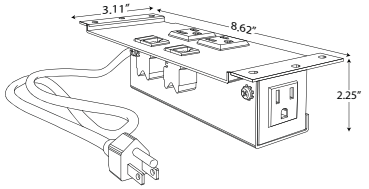

VILLA POWER BASE WITH USB AND DATA SHOWN
3.11" X 8.63" X 3.03"

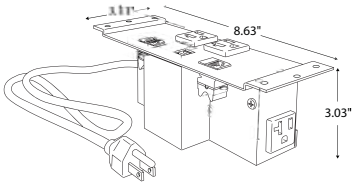

VILLA LIFT GROMMET SHOWN
3.39" X 5.68"

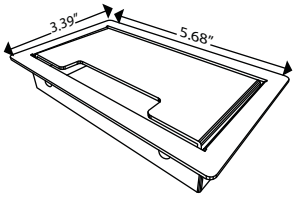

10 Mountain View Drive I Shelton, CT 06484 I P: 800.521.3175 I F: 203.924.6687 I www.electri-cable.com

©2014 Electri-Cable Assemblies. ECA reserves the right to change pricing and specification without notice.

1464 THRU 1465 TYPICAL ELEVATIONS
OWNER TO PROVIDE DETAILS & ELEVATIONS FROM HON

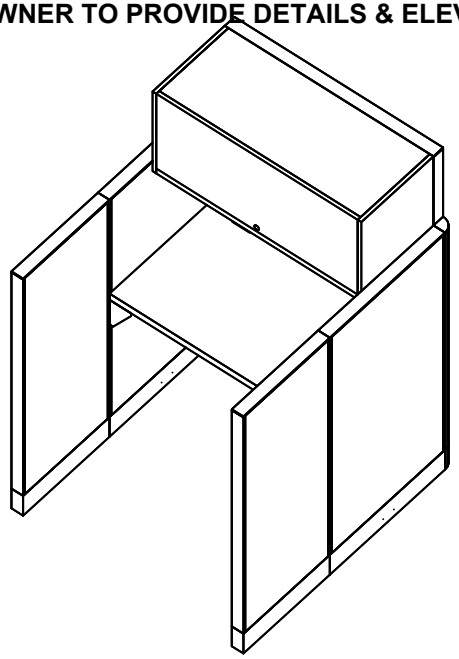

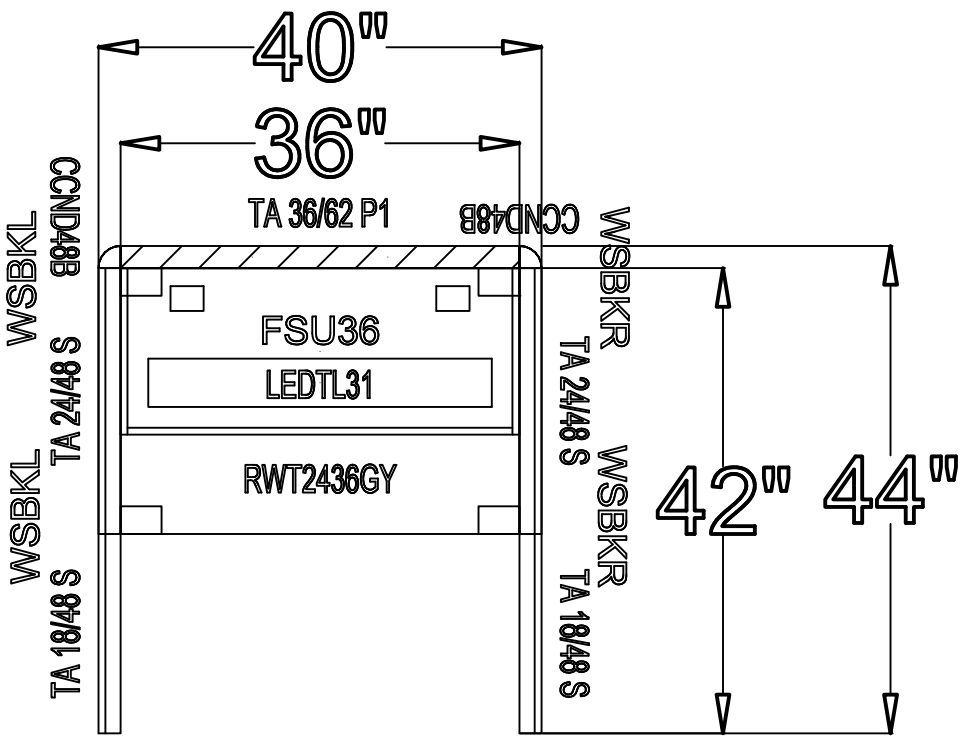

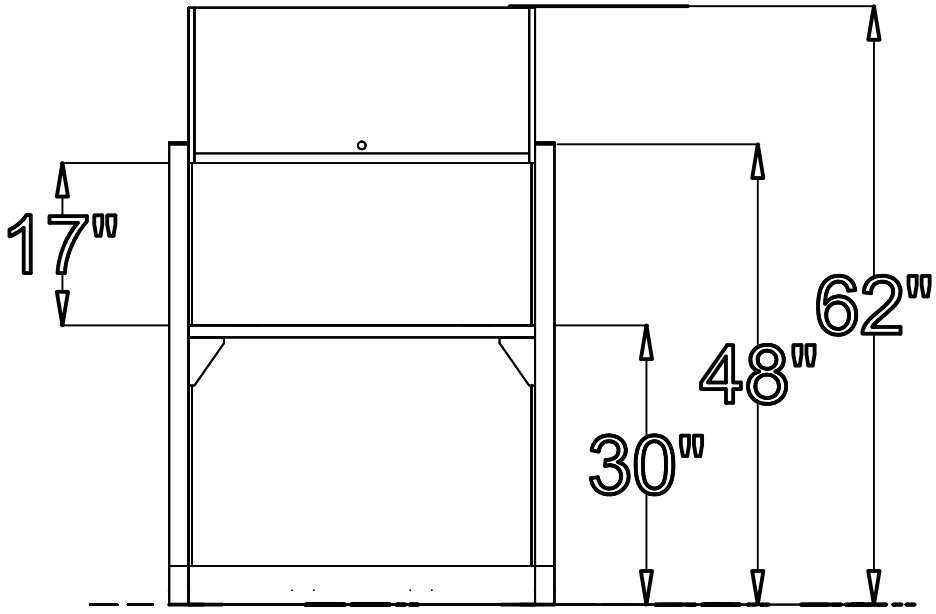

Interior Logistics
1316 E 35th. Pl. Suite 100
Tulsa, Oklahoma 74105
MAIN: 918.382.9120
FAX: 918.382.9038
www.interiorlogistics.com

STUDY CARREL
36W X 42D X 62H

PROJECT#:
DATE: 03/05/19
SCALE: NTS
DESIGNER: LORI ANN MORROW

(https://quickbooks.intuit.com/)

Pricing(https://quickbooks.intuit.com/pricing/)

QuickBooks Point of Sale

Build a point of sale system that works for you and your store.

QuickBooks Desktop Point of Sale has all the hardware to ring sales, accept payments, track inventory, and more.

Call (877) 282-0782

Request a free trial(../free-trial/)

Need a new piece of hardware for your POS system?
Choose from these guaranteed compatible hardware items.[1]

Call us and we'll help you configure the best POS system for your business.
(877) 282-0782

EMV Ready PIN Pad[2]



$349.95

Add to cart (http://quickbooks.intuit.com/commerce/e2e/checkout/redirect_to_cart.jsp?successUrl=/commerce/e2e/cart/shopping_cart.jsp&quantity=1&offeringId=000000000001

Chat live now

Allows your customers to maintain possession of their credit and debit cards

Meets latest PCI PEC security standards

Requires QuickBooks Desktop Point of Sale 12.0 or 18.0 software and a QuickBooks Payments account[3]

Receipt Printer



$219.95

Add to cart (http://quickbooks.intuit.com/commerce/e2e/checkout/redirect_to_cart.jsp?successUrl=/commerce/e2e/cart/shopping_cart.jsp&quantity=1&offeringId=000000000000

Receipt prints out when a sale is complete

Also prints duplicate credit card slips and gift receipts

Auto-cutter for easy removal of receipt

Easy drop-in paper loading

USB interface

Barcode Scanner

Chat live now

$199.95

Add to cart (http://quickbooks.intuit.com/commerce/e2e/checkout/redirect_to_cart.jsp?successUrl=/commerce/e2e/cart/shopping_cart.jsp&quantity=1&offeringId=000000000000

Ring up sales faster and track inventory more accurately

Read quickly across high and low density bar codes
Sleek ergonomic design for operator comfort and productivity
Rugged construction for durability
Scanner stand included
USB interface*

*Wireless Bluetooth version available with USB base station

Cash Drawer



$109.95

Add to cart (http://quickbooks.intuit.com/commerce/e2e/checkout/redirect_to_cart.jsp?successUrl=/commerce/e2e/cart/shopping_cart.jsp&quantity=1&offeringId=000000000000

Opens automatically when you comple

Chat live now

Connects to receipt printer

Pole Display



$209.95

Add to cart (http://quickbooks.intuit.com/commerce/e2e/checkout/redirect_to_cart.jsp?successUrl=/commerce/e2e/cart/shopping_cart.jsp&quantity=1&offeringId=00000000

Display prices as you ring up sales

Allows customers to verify price for increased satisfaction

Bright green fluorescent display with high visibility

Easily program custom messages

Adjustable viewing angles

USB powered – no external power supply needed

Tag Printer

Chat live now

(https://quickbooks.intuit.com/) Pricing(https://quickbooks.intuit.com/pricing/)

QuickBooks Point of Sale

$329.95

Add to cart (http://quickbooks.intuit.com/commerce/e2e/checkout/redirect_to_cart.jsp?successUrl=/commerce/e2e/cart/shopping_cart.jsp&quantity=1&offeringId=000000000000

Print your own inventory tags and bar code labels

- Pair with Bar Code Scanner to enter merchandise information faster and more accurately
- Compact size fits into areas other printers can't
- USB interface

Wireless Bar Code Scanner



$409.95

Add to cart (http://quickbooks.intuit.com/commerce/e2e/checkout/redirect_to_cart.jsp?offeringId=0000000000000100234&priorityCode=3896-20171658823&successUrl=/commerce/e2e/cart/shopping_cart.jsp&quantity=1&cid=dr_em

Scan faster with a lightweight and wireless scanner

- Added protection and wider range of movement than cabled devices
- Page helps locate lost scanners
- Bluetooth enabled

Chat live now



We'll help you configure your point of sale system for your business. Some items are sold separately.
Call us to build your system. (877) 282-0782

Get the Point of Sale supplies that work with Intuit QuickBooks retail solutions software and hardware.

Buy POS supplies (https://intuitmarket.intuit.com/ui/pages/home.html#labels@/fsg/stampsandlabels/p

Important offers, pricing details, & disclaimers

Products

Chat live now

(https://www.intuit.com/)

(https://quickbooks.intuit.com) (https://turbotax.intuit.com/)
(https://proconnect.intuit.com/) (https://www.mint.com/)

About Intuit (https://www.intuit.com/company/) Join Our Team (https://careers.intuit.com/) Press (https://www.intuit.com/company/press-room/) Affiliates And Partners (https://www.intuit.com/partners/) Software And Licenses (https://quickbooks.intuit.com/software-licenses/)

© 2020 Intuit Inc. All rights reserved
Intuit, QuickBooks, QB, TurboTax, Proconnect and Mint are registered trademarks of Intuit Inc. Terms and conditions, features, support, pricing, and service options subject to change without notice.

By accessing and using this page you agree to the Terms and Conditions. (https://accounts.intuit.com/terms-of-service)

About cookies (https://security.intuit.com/index.php/intuit-cookie-policy/) Manage cookies

Legal (https://www.intuit.com/legal/) Privacy (https://www.intuit.com/privacy) Security (https://security.intuit.com/)

PRIVACY FEED
Powered by TR

Chat live now

Chat live now

1809

GAMING CHAIR IN ORANGE & BLACK







- **Seat Depth 18.8 inches**
- **Adjustable Arm Height Yes**
- **Adjustable Seat Height Yes**
- **Armrests Included Yes**
- **Seat Material Leather, Mesh**
- **Cup Holder(s) No**
- **Maximum Weight Capacity**

  299 pound

- **Product Name-High-Back Ergonomic Swivel Gaming Chair**
- **Brand-CorLiving**
- **Product Width 29 inches**
- **Product Height 50 inches**
- **Product Depth 27 inches**
- **Product Weight 42 pounds**
- **Backrest Material Leather, Mesh**
- **Backrest Height 33.5 inches**
- **Backrest Width 22 inches**

SOURCE: https://www.bestbuy.com/site/corliving-high-back-ergonomic-gaming-chair-black-mesh-orange/6328710.p?skuId=6328710

1812 INDOOR TENNIS TABLE



Amp up the competition in your game room with the Prince Tournament 6800 Indoor Table Tennis Table. This indoor table is designed with a MDF table top to provide you with optimal bounce, a box steel apron for durability, and easy-access accessory storage. It comes 50% pre-assembled, making for simple setup- the average assembly time for two people just 90 minutes! Includes net and clip set.

DESIGN

- Tournament table tennis table
- For indoor use only
- Average 2-person assembly time is 90 minutes
- 18mm MDF table top for optimal bounce
- Matte grey finish
- 2" box steel apron
- Swivel wheels with locking casters for safe transport

SPECS

- Table Dimensions: 108”L x 60"W x 30"H
- Storage Dimensions: 32"L x 60"W x 62"H
- Playback Dimensions: 70”L x 60”W x 62”H
- Wheel diameter: 3"

TECHNOLOGY

- Leg levelers and bumper corners for stability and protection
- Easy-access paddle and ball storage holds up to 6 balls and 2 rackets on each side
- Playback capabilities
- Comes 50% preassembled- including apron, casters, legs, accessory holder, brackets, and pre-drilled holes
- Packaging Dimensions: 63” L x 58” W x 6” H

Additional Details

- Includes Pro Net & Clip Set
- Rackets and table tennis balls not included

Price ranges from $600 to $800

SOURCES:

https://www.dickssportinggoods.com/p/prince-tournament-6800-indoor-table-tennis-table-18prcuprnctrnmntnstg/18prcuprnctrnmntnstg

OR

https://www.totaltabletennis.com/prince

1816 & 1817

UMBRELLA STAND & UMBRELLA WET BAG STAND



#1817

Triangular umbrella stand offers a large capacity, holds up to twelve umbrellas. Clever umbrella cut-out design on the sides provide excellent ventilation and speeds up drying time. Equipped with a water retainer. Three interior hooks to hang pocket umbrellas. No tools required for assembly.

Product Specifications

WIDTH INCHES10-1/4
DEPTH INCHES10-1/4
HEIGHT INCHES23-2/3
CAPACITY12 Umbrellas
COLOR FINISH Black
BRANDAlba
CONSTRUCTIONMetal/Plastic
DESCRIPTIONTriangular Umbrella Stand
MANUFACTURERS PART NUMBERPMTRIA2N
SOURCE: https://www.globalindustrial.com/p/office-school-supply/racks/umbrella-stands-and-holders/triangular-umbrella-stand-black



#1816

As visitors enter indoor areas offer the ultimate solution to managing dripping wet umbrellas.

It holds 200 bags on each of 2 sides and has a stable heavy weighted base. An optional sign, [S117BK], that must be ordered at the same time as the bag holder

Features & Benefits:

Floor standing model - designed to accept optional sign
400 bag capacity

Two sided

All aluminum construction

Satin black, baked, powder coat finish

Rust, corrosion, tarnish, and scratch resistant

Quick ship

Made in the USA

Product Specifications

-
  - **BRAND**Glaro
  - **MANUFACTURERS PART NUMBER**FVBS11BK
  - **HEIGHT INCHES**43
  - **COLOR FINISH**Satin Black
  - **WEIGHT LBS**24
  - **FOR USE WITH**UB100, UB1000, S117BK
  - **PACKAGE QUANTITY**1

SOURCE: https://www.globalindustrial.com/p/packaging/bags/specialty-bags/floor-standing-satin-black-wet-umbrella-bag-holderwith-optional-sign-mount



Swingline® High Capacity Electric Stapler, 70 Sheets, Black

S7069270

Product Description

Electric stapler with an engine that is built for speed and performance can handle virtually any size staple job. Stands up to frequent daily use to get the job done right every time.

Each information

Depth	14.3"
Width	5.7"
Height	9.82"
Gross weight	7.40lbs
UPC#	074711692700
Unit quantity	1

Case information

Depth	14.5"
Width	10.25"
Height	6"
Gross weight	7.50lbs
UPC#	50074711692705
Unit quantity	1

Shipping Information

Country of origin	??
Minimum Order Quantity	1
Warranty Period	12
Lowest possible unit	Case

General information

Color	Unknown
Moore #	69270E
Recycled %	0
MSDS Required	N
Layer/Pallet	6
Cases/Layer	8

Features

- Easy-to-use precision alignment guide ensures accuracy
- 70 sheet stapling capacity using simple staple cartridge, comes pre-packed with 5,000 staples
- Durable construction; suction cup feet provide stability
- Flat clinch stapling design allows for neater stacking of stapled papers
- Limited 2 year warranty & 100% Performance Guarantee

Specifications

- **Detailed Color** Black
- **Performance Guarantee** Yes
- **Sheet Capacity (20 lb paper)** 70
- **Staple Capacity** 5,000
- **Tacking Ability** No
- **Warranty** Limited 2-year

www.swingline.com

Confidential and proprietary to ACCO Brands. Images are for illustrative purposes only. Errors and omissions excepted.



Swingline® Commercial Electric Punch, 3 Holes, 8 1/2" Centers, 28 Sheets

A7074535

Product Description

High performance, 3-hole electric punch with fixed punch heads is fast and reliable, ideal for high volume projects and use in shared workspaces.

Case information

Depth	19.6"
Width	10.3"
Height	7"
Gross weight	10.85lbs
UPC#	50050505745352
Unit quantity	1

Case information

Depth	19.6"
Width	10.3"
Height	7"
Gross weight	10.85lbs
UPC#	50050505745352
Unit quantity	1

Shipping Information

Country of origin	??
Minimum Order Quantity	1
Warranty Period	24
Lowest possible unit	Case

General information

Color	PLATINUM
Recycled %	0
MSDS Required	N
Layer/Pallet	6
Cases/Layer	10

Features

- Push button 3-hole electric punch makes hole punching effortless
- Ideal for heavy use
- 28 sheet paper punch capacity
- Smooth, quiet operation
- Built-in chip tray
- Fixed punch heads, 9/32" holes
- Limited 2-year warranty & 100% Performance Guarantee

Specifications

- **Centers** 8 1/2"
- **Detailed Color** Platinum
- **Number of Punch Holes** 3
- **Performance Guarantee** Yes
- **Punch Hole Size** 9/32"
- **Punching Capacity** 28
- **Warranty** Limited 2-year

Other information

- **Dimensions** 16 1/2"L x 6"D x 10"H
- **Size** 3 HOLE

Printed on 3/21/2019 Confidential and proprietary to ACCO Brands. Images are for illustrative purposes only. Errors and omissions excepted.

1822

PAPER CUTTER



17" Heavy Duty Commercial Paper Cutter. This all steel heavy-duty and convenient Paper Cutter Machine is perfect for cutting any size under Ledger paper, thick books, menu, magazines, etc. It can cut up to 400 sheets of paper each time, which is very time-saving for cutting thousands pieces of paper.

Features:

- Brand New in Retail Package and Ready to Ship
- All Heavy Duty Steel Base
- Easy Control Cutting Handle Bar
- Clamp Wheel for Better Holding thicker paper
- Ruler in Inches and Clear Embossed Grid for Precise Cutting
- Adjustable Backstop with Lock for Holding Paper Well
- Rubber Feet for Desktop Use

Speficications:

- Base Size: 26 5/16" x 21 6/16" x 2 1/16"
- Overall Size: 28 12/16" x 24 7/16" x 13 3/16" (Including Cutting Bar)
- Maximum Cutting Width: 17"
- Best Cutting Size: Under Ledger Paper
- Maximum Cutting Capacity: 400 Sheets (for 2.85oz Ledger Paper)

Package Includes:

- 1x Desktop 400 sheets Paper Cutter
- 1x User Manual

SOURCE: https://www.walmart.com/ip/Yescom-400-Sheet-Capacity-Industrial-Guillotine-Paper-Trimmer-Cutter-Stack-Heavy-Duty-Steel-Base/192645733

1830

FLAG SET INCLUDING U.S., OK, CHEROKEE NATION FLAGS



SKU: BNDL_KUSA35I X 1 +

MPN: BUNDLE



BNDL_KINO X 2 +

MPN: BUNDLE



SKU: SOK35N X 1

MPN: 021302

The Super Tough Indoor American Flag, Flagpole, Base & Tassel available at Online Stores comes with a gold cord and tassel and is sold with your choice of either a 7-foot, 8-foot or 9-foot pole. Whether you choose the 100% cotton or weather-resistant nylon fabric, your flag will have sewn stripes and embroidered stars. Gold rayon fringe outlines three sides of the USA flag. Select from a choice of six different pole toppers for your indoor flag pole and base. Get it with free shipping when you order from Online Stores.

Features:

- US flag 3ft x 5ft 100% nylon
- Embroidered stars
- Sewn stripes
- Suitable for indoor and parade use
- Includes gold rayon fringe
- 7ft or 8ft (9ft option $10 extra) gloss varnished 1 1/4" oak two-piece pole with aluminum fitting
- Your choice of pole topper: choose from a Metal Gold Eagle, Gold Plastic Spear, Gold Metal Spear ($10 Extra Cost), Metal Army Spear ($10 Extra Cost), Gold Metal Parade Ball ($10 Extra Cost), or Metal Texas Star ($10 Extra Cost)
- Gold cord and tassel
- Unweighted high gloss gold finish ABS floor stand
- Don't forget your flag spreader to ensure a proper display of your new flag (Flag Spreader Sold Separately)

Nylon flag is made in the U.S.A.

SOURCE: https://www.united-states-flag.com/indoor-american-flag-flagpole-base-tassel.html

*****CHEROKEE NATION FLAG SOURCE TO BE IDENTIFIED

2254-2254a-2254b-2254c-2254d

OPEN WIRE MOBILE CARTS

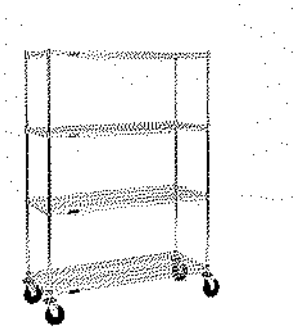

MOBILE CART 2254 VARIOUS SIZES WITH BUMPER GUARDS

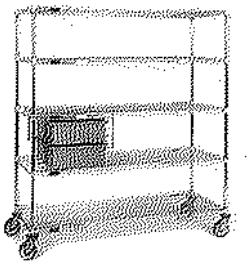

MOBILE CART 2254a WITH BUMPER GUARDS & DRAWER SYSTEM



MOBILE LINEN CART 3005 WITH BUMPER GUARDS

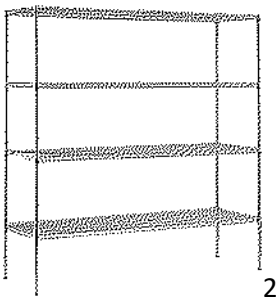

2254c PREFER MOBILE WITH BUMPER GUARDS 72” WIDE



2254d 36” WIDE MOBILE CART WITH BUMPER GUARDS

EQUIPMENT #2265

FOR ENVIRONMENTAL SERVICE SATELLITE ROOMS



Stainless Steel Wall Mounted Shelf, 12" x 36" Shelf

Item #: T97B359368
Sold By: globalindustrial.com

- All welded 16 gauge 304 series stainless steel construction.
- Comes with 2-4 wall brackets depending on the length.

Product Specifications

-
  - **accessory_type**Shelf
  - **NSF**Yes
  - **UNIT TYPE**Wall Mounted Shelf
  - **BRAND**Win Holt
  - **ACCESSORY WIDTH INCHES**12
  - **ACCESSORY LENGTH INCHES**36
  - **USDA**Yes

teclab

PRODUCT DESCRIPTION

TALL STORAGE CABINETS

The Teclab Storage cabinet. Setting a new standard in storage!

That's exactly what you'll be thinking when you take a good look at the new Teclab storage cabinet. The Teclab design team has redefined the storage cabinet with Teclab's industry leading standard of quality and durability.

The Storage cabinet features beefier construction with heavier material than competitive cabinets with exclusive Teclab features including reinforced shelves and backs, reinforced doors with smooth operating, easy lift-off hinges and easy to use four-point in cabinet leveling.

Yes, discovering how to put all of these heavy duty features and more into an aesthetically pleasing package was a challenge and a test of Teclab's commitment to building the best. But even we're surprised at how handsome the finished product is. In fact, a lot of our customers are saying what we've been thinking: "Why hide a cabinet that looks this good in the backroom?" Teclab has created a storage cabinet to be the leader in performance and value.



SC-4824-GD

SIZES

30" wide x 78" high x 18" deep (part# SC-3018*)

36" wide x 78" high x 18" deep (part# SC-3618*)

48" wide x 78" high x 18" deep (part# SC-4818*)

30" wide x 78" high x 24" deep (part# SC-3024*)

36" wide x 78" high x 24" deep (part# SC-3624*)

48" wide x 78" high x 24" deep (part# SC-4824*)

*Options (add to part number)

-WR (Clothes Bar)
- XS (Additional Shelf, 4 shelves come standard)
- GD (Glass Doors, as shown)

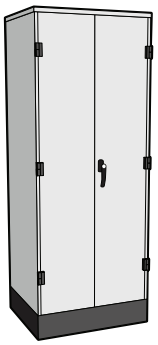

SC-3018

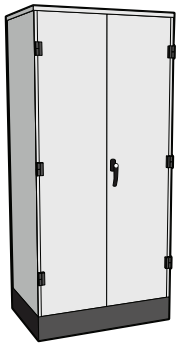

SC-3618

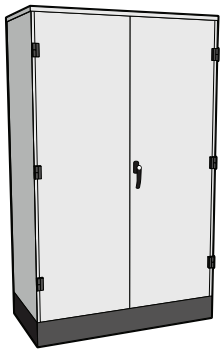

SC-4818

FINISH OPTIONS

Powder coated steel components or brushed stainless steel finish.



* Denotes a non-standard color. ** Custom paint color matching is available

Teclab • 6450 Valley Industrial Drive • Kalamazoo, MI 49009 • 269-372-6000 • info@teclab.com teclab.com

2291b

TASER STORAGE CABINET



4 Compartment Taser and Pistol Locker

Four secure individual compartments for pistols or tasers with accessories. 16 gauge steel construction and rubber matting inside makes these the perfect compact storage. System units can be stacked and fastened to each other or can be used on top of our weapon lockers for long guns

2x2 Formation

- Model Number: E1-918-05
- 2x2 Formation: 14”W x 12.5”H x 15”D

SOURCE: http://www.seksolutions.com/taser-storage.html

	XTRA™ CARTS: 4091 UTILITY CART		XTRA™ CARTS: 4096 UTILITY CART		XTRA™ CARTS: 4092 UTILITY CART		XTRA™ CARTS: 4093 UTILITY CART		XTRA™ EQUIPMENT CART: 4095 UTILITY CART		XTRA™ INSTRUMENT CART: 4094 UTILITY CART		EXECUTIVE SERVICE CART		CONVERTIBLE CART	
																
	WEIGHT CAPACITY	DIMENSIONS	WEIGHT CAPACITY	DIMENSIONS	WEIGHT CAPACITY	DIMENSIONS	WEIGHT CAPACITY	DIMENSIONS	WEIGHT CAPACITY	DIMENSIONS	WEIGHT CAPACITY	DIMENSIONS	WEIGHT CAPACITY	DIMENSIONS	WEIGHT CAPACITY	DIMENSIONS
	300 LBS.	40.6" (L) X 20.0" (W) X 37.8" (H)	300 LBS.	40.6" (L) X 20.0" (W) X 51.0" (H)	300 LBS.	40.6" (L) X 20.0" (W) X 37.8" (H)	300 LBS.	40.6" (L) X 20.0" (W) X 37.8" (H)	300 LBS.	40.6" (L) X 20.75" (W) X 37.8" (H)	300 LBS.	40.6" (L) X 20.0" (W) X 37.8" (H)	300 LBS.	39" (L) X 21" (W) X 38" (H)	400 LBS.	45.2" (L) X 23.8" (W) X 34.4" (H)
AVAILABLE COLORS	BLACK, GRAY, OFF-WHITE		BLACK		OFF-WHITE		BLACK, OFF-WHITE		BLACK		GRAY		BLACK, PLATINUM		BLACK, RED	
HANDLE STYLE	ANGLED, ERGO. CURVED		ANGLED, ERGO. CURVED		ANGLED, ERGO. CURVED		ANGLED, ERGO. CURVED		ANGLED, ERGO. CURVED		ANGLED, ERGO. CURVED		FLAT, ERGO. CURVED		FLAT, ERGO. CURVED	
MATERIAL	STRUCTURAL WEB POLYPROPYLENE METAL UPRIGHTS		STRUCTURAL WEB POLYPROPYLENE METAL UPRIGHTS		STRUCTURAL WEB POLYPROPYLENE METAL UPRIGHTS		STRUCTURAL WEB POLYPROPYLENE METAL UPRIGHTS		STRUCTURAL WEB POLYPROPYLENE METAL UPRIGHTS		STRUCTURAL WEB POLYPROPYLENE METAL UPRIGHTS		STRUCTURAL WEB POLYPROPYLENE		HIGH-PRESSURE POLYPROPYLENE	
STORAGE CONFIGURATION	–		–		–		–		LOCKABLE DOORS		LOCKABLE DOORS SLIDING DRAWER		–		–	
CASTER OPTIONS	TPR QUIET, NON-MARKING		TPR QUIET, NON-MARKING		TPR QUIET, NON-MARKING		TPR QUIET, NON-MARKING		TPR QUIET, NON-MARKING		TPR QUIET, NON-MARKING		TPR QUIET, NON-MARKING		TPR (2 FIXED, 2 SWIVEL) QUIET, NON-MARKING	
CASTER SIZE	4"		4"		4"		4"		4"		4"		4"		5"	
LOCKING CASTERS															•	
ENCLOSED SIDE PANELS (2)					•		•		•							
ENCLOSED BACK PANEL							•		•							
ACCESSORIES																
REFUSE BIN (8 GAL.)	•		•		•		•		•		•		•			
UTILITY BIN (4 GAL.)	•		•		•		•		•		•		•			
UTILITY SLIDING DRAWER	•		•		•		•		•		•					

	SERVICE CARTS: 9T65-71 UTILITY CART		SERVICE CARTS: 3421 UTILITY CART		SERVICE CARTS: 3424-88 UTILITY CART		SERVICE CARTS: 3355-88 UTILITY CART		SERVICE CARTS: 3457 UTILITY CART	
										
	WEIGHT CAPACITY	DIMENSIONS	WEIGHT CAPACITY	DIMENSIONS	WEIGHT CAPACITY	DIMENSIONS	WEIGHT CAPACITY	DIMENSIONS	WEIGHT CAPACITY	DIMENSIONS
	100 LBS.	31.5" (L) X 16.3" (W) X 36" (H)	150 LBS.	33.6" (L) X 18.6" (W) X 36.6" (H)	200 LBS.	33.6" (L) X 18.6" (W) X 37.8" (H)	300 LBS.	31" (L) X 18" (W) X 37.5" (H)	200 LBS.	33.6" (L) X 18.6" (W) X 37.8" (H)
AVAILABLE COLORS	BEIGE		BLACK, PLATINUM		BLACK, PLATINUM, OFF-WHITE, RED, GREEN, BLUE		PLATINUM		BLACK	
HANDLE STYLE	UPRIGHT		ANGLED, ERGO. CURVED		ANGLED, ERGO. CURVED		ANGLED, ERGO. CURVED		ANGLED, ERGO. CURVED	
MATERIAL	STRUCTURAL WEB POLYPROPYLENE METAL UPRIGHTS		STRUCTURAL WEB POLYPROPYLENE		STRUCTURAL WEB POLYPROPYLENE METAL UPRIGHTS		STRUCTRUAL WEB POLYPROPYLENE		STRUCTURAL WEB POLYPROPYLENE	
STORAGE CONFIGURATION	–		–		–		–		LOCKABLE DOORS SLIDING DRAWER	
CASTER OPTIONS	TPR QUIET, NON-MARKING		TPR QUIET, NON-MARKING		TPR QUIET, NON-MARKING		TPR QUIET, NON-MARKING		TPR QUIET, NON-MARKING	
CASTER SIZE	3"		3"		4"		4"		4"	
LOCKING CASTERS										
ENCLOSED SIDE PANELS (2)	•		•						•	
ACCESSORIES										
ENCLOSED BACK PANEL										
REFUSE BIN (8 GAL.)			•		•		•		•	
UTILITY BIN (4 GAL.)			•		•		•		•	

CASTERS		
CASTER TREAD MATERIAL		TPR (THERMOPLASTIC RUBBER)
CASTER SIZE		4"
CASTER TYPE (QTY.)		2 SWIVEL; 2 FIXED
FLOOR SURFACES	**EXCELLENT**	ASPHALT, BRICK, CARPET, CONCRETE, LINOLEUM/TILE, TERRAZZO, AND WOOD
	GOOD	STEEL (RIBBED AND SMOOTH)
	FAIR	–
OPERATING CONDITIONS	**EXCELLENT**	METAL SCRAPS (SMALL OR LARGE)
	GOOD	WATER, STEAM, OR ANIMAL FATS
	FAIR	MILD OR HARSH CHEMICALS, OIL & GREASE
REPLACEMENT ITEM #		FG3424L60000 4" SWIVEL CASTER KIT
ADDITIONAL INFORMATION		TPR CASTERS ABSORB SHOCK AND PROVIDE FLOOR SURFACE PROTECTION AND QUIET OPERATION. CHEMICAL AND WATER RESISTANT.

SERVICE CARTS
SELECTION GUIDE

RCP-385
#141734
©2015 Rubbermaid Commercial Products LLC
8900 Northpointe Executive Drive, Huntersville, NC 28078

To see our complete range of material handling solutions visit our online catalog at **rubbermaidcommercial.com**

Rubbermaid® Commercial Products

2405

PLATFORM TRUCK (CART) WITH HANDLE

FOR TRANSPORTING WATER & SUPPLIES



Product Specifications

- **LENGTH INCHES**28
- **WIDTH INCHES**18
- **CAPACITY LBS**400
- **COLOR FINISH**Gray
- **ASSEMBLY**Assembled
- **BOLT SPACING**Caster Mounting Hole Spacing = 3.86" x 2.2"; Hole Dia. = 0.41"
- **BRAND**Global Industrial™
- **CASTER SIZE**Caster Plate = 3.14" x 4.75
- **CONSTRUCTION**Steel
- **DECK HEIGHT INCHES**5-1/2
- **DECK LENGTH INCHES**23
- **DECK WIDTH INCHES**18
- **HANDLE HEIGHT INCHES ABOVE FLOOR**33
- **LIMITED WARRANTY**1 Year
- **WEIGHT LBS**25
- **WHEEL DIAMETER INCHES**4
- **WHEEL TYPE**Rubber

SOURCE: https://www.globalindustrial.com/p/material-handling/platform-trucks/folding/folding-platform-truck-with-solid-steel-deck-400-lb-capacity

	HEAVY-DUTY UTILITY CART 9T SERIES		HEAVY-DUTY UTILITY CART 89 SERIES		HEAVY-DUTY UTILITY CART 89 SERIES		TRADES CART		HEAVY-DUTY UTILITY CART 88 SERIES		HEAVY-DUTY UTILITY CART 00 SERIES	
									 		 	
SMALL	500 LBS.	34.25" (L) X 17.38" (W) X 31.5" (H)	500 LBS.	39.0" (L) X 17.9" (W) X 33.25" (H)	500 LBS.	37.9" (L) X 19.2" (W) X 33.3" (H)	330 LBS.	38" (L) X 19.3" (W) X 33.4" (H)	500 LBS.	39.0" (L) X 17.9" (W) X 33.3" (H)	500 LBS.	37.9" (L) X 19.25" (W) X 33.3" (H)
MEDIUM	500 LBS.	40.25" (L) X 25.6" (W) X 32.5" (H)	500 LBS.	42.25" (L) X 25.9" (W) X 33.25" (H)	500 LBS.	43.9" (L) X 25.9" (W) X 33.3" (H)	–	–	500 LBS.	44.0" (L) X 25.3" (W) X 33.3" (H)	500 LBS.	44.0" (L) X 25.9" (W) X 33.3" (H)
LARGE	–	–	–	–	–	–	–	–	750 LBS.	55.0" (L) X 25.9" (W) X 33.3" (H)	500 LBS.	54.0" (L) X 25.3" (W) X 36.0" (H)
AVAILABLE COLORS	BLACK		BLACK, BEIGE		BLACK, BEIGE		BLACK, RED		BLACK, BEIGE		BLACK, BEIGE	
HANDLE STYLE	FLAT-HANDLE		FLAT-HANDLE		FLAT-HANDLE		FLAT-HANDLE		ERGO-HANDLE		ERGO-HANDLE	
TOP-SHELF STYLE	POCKET-SHELF		POCKET-SHELF		FLAT-SHELF		FLAT-SHELF		POCKET-SHELF		FLAT-SHELF	
BOTTOM-SHELF STYLE	POCKET-SHELF		POCKET-SHELF		POCKET-SHELF		POCKET-SHELF		POCKET-SHELF		POCKET-SHELF	
MATERIAL	POLYPROPYLENE (PP)		POLYPROPYLENE (PP)		POLYPROPYLENE (PP)		POLYPROPYLENE (PP)		POLYPROPYLENE (PP)		POLYPROPYLENE (PP)	
CASTER OPTIONS	TPR QUIET, NON-MARKING		TPR QUIET, NON-MARKING		TPR QUIET, NON-MARKING		TPR QUIET, NON-MARKING		TPR / PNEUMATIC QUIET, NON-MARKING		TPR / PNEUMATIC QUIET, NON-MARKING	
CASTER SIZE	5" OR 8" (SOLD SEPERATELY)		5" OR 8" (SOLD SEPERATELY)		5" OR 8" (SOLD SEPERATELY)		5"		5" OR 8" (SOLD SEPERATELY)		5" OR 8" (SOLD SEPERATELY)	
EASY-REACH TOOL/ACC. STORAGE COMPARTMENT			•		•		•		•		•	
BUILT-IN TOOL HOLSTER & CADDY									•		•	
MOLDED-IN FITTINGS (FOR PIPES/RODS)									•		•	
INTEGRATED V-NOTCH									•			
BUILT-IN CORD WRAP					•		•					
ACCESSORIES												
REFUSE BIN (8 GALLON)					•							
UTILITY BIN (4 GAL.)					•							
CORD/STEP LADDER HOOKS	•		•		•		•		•			
3-OUTLET POWER STRIP	•		•		•		•		•			
FULL EXTENSION SLIDING DRAWER			•		•		•		•			

		STANDARD CASTERS	HEAVY-DUTY CASTERS	CASTER OPTIONS
CASTER TREAD MATERIAL		TPR (THERMOPLASTIC RUBBER)	TPR (THERMOPLASTIC RUBBER)	PNEUMATIC
CASTER SIZE		5"	5"	8"
CASTER TYPE (QTY.)		2 SWIVEL; 2 FIXED	2 SWIVEL; 2 FIXED	2 SWIVEL; 2 FIXED
LOCKING		NO	NO	NO
WEIGHT-LOAD RATING		500 LBS	750 LBS	750 LBS
FLOOR SURFACES	**EXCELLENT**	ASPHALT, BRICK, CARPET, CONCRETE, LINOLEUM/TILE, TERRAZZO, AND WOOD	ASPHALT, BRICK, CARPET, CONCRETE, LINOLEUM/TILE, TERRAZZO, AND WOOD	ASPHALT, BRICK, CARPET, CONCRETE, LINOLEUM/TILE, TERRAZZO, STEEL (RIBBED AND SMOOTH), AND WOOD
	GOOD	STEEL (RIBBED AND SMOOTH)	STEEL (RIBBED AND SMOOTH)	–
	FAIR	–	–	–
OPERATING CONDITIONS	**EXCELLENT**	METAL SCRAPS (SMALL OR LARGE)	METAL SCRAPS (SMALL OR LARGE)	–
	GOOD	WATER, STEAM, OR ANIMAL FATS	WATER, STEAM, OR ANIMAL FATS	MILD OR HARSH CHEMICALS, METAL SCRAPS (SMALL OR LARGE), WATER, STEAM, OR ANIMAL FATS
	FAIR	MILD OR HARSH CHEMICALS, OIL & GREASE	MILD OR HARSH CHEMICALS, OIL & GREASE	OIL & GREASE
REPLACEMENT ITEM #		3485097 - 5"" TPR CASTER KIT SWIVEL: FG4501L20000 RIGID: FG4501L10000	SWIVEL: FG4546L10000 RIGID: FG4501L10000	FG4592000000
ADDITIONAL INFORMATION		TPR CASTERS ABSORB SHOCK AND PROVIDE FLOOR SURFACE PROTECTION AND QUIET OPERATION. CHEMICAL AND WATER RESISTANT.	TPR CASTERS ABSORB SHOCK AND PROVIDE FLOOR SURFACE PROTECTION AND QUIET OPERATION. CHEMICAL AND WATER RESISTANT.	PNEUMATIC CASTERS PROVIDE A CUSHIONED AND QUIET RIDE FOR FRAGILE LOADS. ALSO IDEAL FOR ROUGH, UNEVEN SURFACES BOTH IN INDOOR AND OUTDOOR USE.

HEAVY-DUTY UTILITY CARTS
SELECTION GUIDE

RCP-384
#141734
©2015 Rubbermaid Commercial Products LLC
8900 Northpointe Executive Drive, Huntersville, NC 28078

To see our complete range of material handling solutions visit our online catalog at **rubbermaidcommercial.com**

Rubbermaid® Commercial Products

2406

UTILITY 2 SHELF CART FOR TRANSPORT OF BOXES, TOTES, ETC…



Rubbermaid® Commercial RCP452500BK Flat Shelf Utility Cart,2-Shelf,25-1/4w x 44d x 38-1/8h

Won't rust, dent, chip or peel. Lightweight for easy maneuverability and quiet operation. No sharp edges to nick walls or furniture. Flat shelves provide a smooth worksurface and allow easy loading. Compatible with Optional Refuse/Utility Bins, Rubbermaid® Commercial Optional Utility Cart Refuse/Utility Bin and Rubbermaid® Commercial Utility Bin (sold separately). Color: Black; Capacity (Weight): 500 lbs.; Caster/Glide/Wheel: Two 5" Swivel Non-Marking Casters.

Product Specifications

- **LENGTH INCHES**44
- **WIDTH INCHES**25
- **HEIGHT INCHES**33
- **CAPACITY LBS**500
- **COLOR FINISH**Black
- **ASSEMBLY**Unassembled
- **BRAND**Rubbermaid®
- **CONSTRUCTION**Plastic
- **LIMITED WARRANTY**1 Year
- **MANUFACTURERS PART NUMBER**FG452500BLA
- **REFERENCE #**4525
- **SHELF LENGTH INCHES**37
- **SHELF QUANTITY**2
- **SHELF TYPE**Flat
- **SHELF WIDTH INCHES**25
- **STYLE**Flat Top Shelf/Tray Bottom Shelf
- **WHEEL DIAMETER INCHES**5
- **WHEEL TYPE**Rubber

SOURCE: https://www.globalindustrial.com/p/material-handling/trucks-carts/plastic-shelf-carts/cart-utility-flat-bk3

2451

4 WHEELED FLAT DOLLY



HARDWOOD DOLLY WITH SOLID DECK

Seasoned hardwood Poplar, smoothly finished with flush top bolted construction. The wood is sterilized and baked at high temperatures and then a coat of varnish is applied to it. Four swivel hard rubber casters.

Product Specifications

- **LENGTH INCHES**24
- **WIDTH INCHES**16
- **HEIGHT INCHES**5
- **CAPACITY LBS**1000
- **COLOR FINISH**Brown
- **ASSEMBLY**Unassembled
- **BRAND**Global Industrial™
- **CONSTRUCTION**Wood
- **LIMITED WARRANTY**1 Year
- **STYLE**Solid Deck
- **WEIGHT LBS**11
- **WHEEL DIAMETER INCHES**3
- **WHEEL TYPE**Rubber

SOURCE: https://www.globalindustrial.com/p/material-handling/hand-trucks-dollies/dollies-wood/hardwood-dolly-with-solid-deck-24-x-16-1000-lb-capacity?unbxdSuggestion=SUGGESTION%20-%20Hardwood%20Dolly%20with%20Solid%20Deck%2024%20x%2016%201000%20Lb.%20Capacity&q=dolly

2455

CONVERTIBLE HAND TRUCK (DOLLY)



Wesco® Spartan Jr. 2-in-1 CONVERTIBLE HAND TRUCK

This convertible, multi-position hand truck provides the functionality of a lightweight hand truck and a 4 wheel platform truck. Smooth and easy transition from 2 to 4 wheel position by pressing the release bar. 10" wheels and 5" polyurethane swivel casters for easy mobility. 18" wide cast aluminum noseplate for larger loads. Shipped ready to assemble.

Product Specifications

- **WIDTH INCHES**22
- **ASSEMBLY**Unassembled
- **BRAND**Wesco®
- **CONSTRUCTION**Aluminum
- **FRONT CASTER**5" x 1-1/4" Polyurethane
- **HAND TRUCK CAPACITY LBS.**500
- **HAND TRUCK HEIGHT INCHES**52
- **MANUFACTURERS PART NUMBER**SPTN-JR-T18-SR
- **PLATFORM TRUCK BED LENGTH INCHES**38
- **PLATFORM TRUCK BED WIDTH INCHES**12
- **PLATFORM TRUCK CAPACITY LBS.**1000
- **PLATFORM TRUCK HEIGHT INCHES**40
- **PRODUCT FAMILY**2 in 1 Hand Truck
- **STYLE**Spartan
- **TYPE**Junior
- **WEIGHT LBS**50
- **WHEEL DIAMETER INCHES**10
- **WHEEL TYPE**Rubber

SOURCE: https://www.globalindustrial.com/p/material-handling/hand-trucks-dollies/hand-trucks-convertible/jr-aluminum-2-in-1-hand-truck-rubber-wheels-987051

2505

BULLETIN BOARD



BestRite's Rubber-Tak Tackboard with Aluminum Frame is made of 100 percent recycled rubber, so it's tough enough to use in your high-traffic areas like hallways and gymnasiums. The rubber absorbs sound and shock better than typical cork tackboards. An attractive textured surface won't show pinholes and resists moisture, mildew and fading. Choose from two colors.

SPECIFICATIONS

Surface:	Rubber
Frame Style:	Anodized aluminum
Width:	4'
Height:	4'
Assembly:	Installation required
Weight:	24.5 lbs.
Shipping Method:	Freight
Note:	This item is custom, sorry no returns

SOURCE:

https://www.schooloutfitters.com/catalog/product_info/pfam_id/PFAM38537/products_id/PRO10258

2522

MOBILE MARKER BOARD

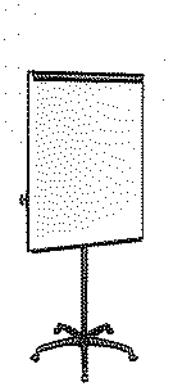

Specifications

Material : Aluminum	**True Color** : Black	**Height in Inches** : 39
Width in Inches : 27.5	**Frame Style** : Fixed	**Leg Style** : With Casters
Storage Tray or Shelf : Includes open storage tray	**Adjustable Height Min to Max Inches** : 44 - 75.25	**Easel Type** : Dry/Wet Erase
Customizable : No		
Weight : 36.52 lbs. per Each		

SOURCE: https://www.staples.com/MasterVision-Easy-Clean-Dry-Erase-Mobile-Pres-Easel-Black-Silver/product_230262

2602

TECH INDUSTRIAL STOOL



Mayline's Technical Mobile stool perfect for technical applications, Height Adjustable Tables, IT and drafting workstations. Comfortable molded seat with height adjustment and chrome foot ring. Ships in 2-3 Business Days.

- Molded Polyurethane Seat provides Sculpted Comfort and Support
- Backless Design for Mobility
- Chrome Foot Ring with twist and lock height adjustment
- Durable easy-to-clean seat
- Adjustable seat height for application flexibility
- Works well with Tech-Works and Height Adjustable Tables
- Meets ANSI/BIFMA Performance Criteria
- Ships Free by UPS
- **10 % bulk discount in cart for 4 or more stools**

Specifications:

- Dimensions 18.75" x 17.5" x 21.75"-31.25"

SOURCE: https://www.officechairsusa.com/technical-stool/?utm_source=bing&utm_medium=cse&utm_term=2411&msclkid=0362b2bb0aeb10d18d7bee03eb86ce5e&utm_campaign=Branded_Shopping_Desktop&utm_content=All%20Products#sthash.mucS6tMw.dpbs

2603

TECH WORKBENCH



TechWorks - 72"W Fully Loaded Typical

TechWorks technology furniture includes benches, organizer frames and accessories that can be configured in any number of ways to meet different tasks and keep pace with evolving technologies.

- 72"W X 30"D Table w/Lam
- 72"W x 48"H Upper Frame
- 48"W x 18"D Lam. Fixed Shelf
- Retractable Keyboard/Mouse Platform
- Full Base Shelf 72"W x 23"D
- 24"W x 3"H Part Bin Panels
- 24"W Lockable Storage Bin
- 48"W 15amp Power Strip
- 72"W Task Light (48"H Frames)
- 24"W x 24"H Pegboard
- 72"W Wire Cable Basket
- 24"W x 24"H Whiteboard

SOURCE: https://www.mayline.com/product-detail.php?id=P1088

2606D

FACILITIES WORKBENCH



Product Specifications

- **WIDTH INCHES**72
- **DEPTH INCHES**36
- **HEIGHT INCHES**34
- **CAPACITY LBS**10,000
- **COLOR FINISH**Gray
- **ASSEMBLY**Assembled
- **BRAND**StrongHold®
- **DRAWER QUANTITY**2
- **LEG TYPE**Fixed
- **MODEL**253646
- **TOP CONSTRUCTION**Maple Butcher Block Square Edge
- **WEIGHT LBS**558
- **STYLE**D
- **HEIGHT INCHES (FIXED LEG)**34
- **MATERIAL**Maple

SOURCE: https://www.globalindustrial.com/p/work-benches/extra-heavy-duty/drawer/72-x-36-x-34-2-drawer-with-maple-top-workbench

2609





34 IN CLOSET ORGANIZER / TOOL HOLDER KIT, GRAY

SKU: FG199300GRAY

Helps increase productivity and efficiency through better tool storage and access

- S-hooks holds 5/8" to 1 1/4" (16 cm to 32 cm) handle diameters
- Deep double hooks afford easy accessibility
- Clip holder for work notes and instructions

DETAILS

Helps increase productivity and efficiency through better tool storage and access. S-hooks hold 5/8" to 1 1/4" (1.6 cm to 3.2 cm) handle diameters. Deep double hooks afford easy accessibility. Clip holder for work notes and instructions.

Features and Benefits:

- S-hooks holds 5/8" to 1 1/4" (16 cm to 32 cm) handle diameters

2656
3FT TYPE IAA FIBERGLASS STEP LADDER WITH SHELF



FEATURES

- Extra heavy duty aluminum HolsterTop® with thick side plates
- Shoulder bolt and lock nut on top hinge; 4 solid aluminum rivets attach top to each front rail
- SPILL-PROOF® Plastic pail shelf automatically closes with Stepladder
- Slip-resistant TRACTION-TRED® steps are single riveted and have extra wide knee braces
- Heavy duty internal spreaders
- Full set of rear horizontals spaced one per foot
- GLAS*MARK® Violator stripes on rails allow ladder to be more visible
- Molded external rail shield helps protect against abrasion damage
- EDGE® bracing system helps to decrease damage to rail
- Slip-resistant foot pads attached to the EDGE® structure
- Plastic external rail shield helps protect against abrasion damage
- Every rivet backed up by metal plate or washer to protect rails

Material	Fiberglass
Max. Load	375lb
Approx. Product Height	7.56in
Approx. Product Length	36in
Approx. Product Width	19.75in
Rear Flange Dimension	1-3/16in
Spreader Material	Steel

2658a STEP LADDER TO REACH 10 FT WORKING HEIGHT



The PT7400-4C Fiberglass 4ft STOCKR'S LADDER® has 4 casters to allow easy 360 degree mobility. Each caster is spring mounted eliminating the need for a separate rake. Slip-resistant TRACTION-TRED® steps on front and rear sections allow for one or two-person jobs. Each side has a duty rating of 300lb. The PINCH-PROOF™ platform easily opens and closes and provides a secure, comfortable work area. Fiberglass rails are non-conductive for working near electricity.

SPECIFICATIONS

Approx. Closed Length	72in
Approx. Cu. Ft. Per Unit	8.4
Approx. Overall Ladder Height (Open)	72in
Approx. Overall Ladder Length (Closed)	6ft
Approx. Product Weight (lb)	37
Approx. Shipping Weight (lb)	37
Approx. Spread	50in
Certifications	ANSI A14.5 (2007), OSHA
Approx. Product Depth	7in
Description of Top Features	Safety guard rail
Foot Material	Metal with Rubber Pad
Front Flange Dimension	1-3/16in
Front Rails Dimension	3-1/8in
Material	Fiberglass
Max. Load	300lb
Approx. Product Height	9.96in
Approx. Product Length	72in
Approx. Product Width	25.25in
Platform Depth	22in
Platform Dimensions	12-3/4in x 22in

Rubbermaid 5G76 FastTrack Garage 48 Inch Rail - T9A270129 Pkg Qty 2

Rubbermaid 5E06 FastTrack Garage Ladder Hook - T9A270133 Pkg Qty 2

Rubbermaid 3S05 FastTrack Garage Hardware Kit For Fastrack Rail T9A270130:





Series Name	FastTrack Garage
Type	Hook
Total Number of Pieces	1
Rail Material	Steel
Assembled Length (Inches)	9
Magnetic	No
Mounting Hardware Included	No
Manufacturer Color/Finish	Satin nickel
Color/Finish Family	Silver
Warranty	1-year limited

Assembled Depth (Inches)	9.4
Assembled Width (Inches)	2.7
Kit	No
Material	Steel
For Use with Pegboard	No
For Use with Slatwall	No
UNSPSC	24112400
Load Capacity (lbs.)	50
Brand/Model Compatibility	FastTrack by Rubbermaid
For Use With	Ladder
Lowe's Exclusive	No

SOURCE: https://www.globalindustrial.com/p/storage/Maintenance-Garage-Furniture/Garage-Maintenance-Furniture/rubbermaid-fasttrack-garage-48-inch-rail-270129?presentType=98&trackCatKey=0&trackPrimKey=0&trackType=4&webCatKey=0

Heavy-Duty Utility Carts

Transport materials, supplies, and heavy loads securely in almost any environment.

- Available in pocket-shelf or flat-shelf models
- Ergonomic handle allows optimum hand placement for improved worker safety and control
- Executive Series version features Quiet Casters

Pocket-shelf models feature:

- Integrated V-notch to hold pipe and conduit securely for safe cutting
- Deep pocket shelves to keep loads secure

Flat-shelf models feature:

- Large, flat top shelf for oversize loads and smarter work surface
- Lower pocket shelf to keep loads secure



STAY ORGANIZED
Easy-reach tool/accessory hooks provide additional storage.



WORK MORE EFFICIENTLY
Built-in tool holster and caddy keep items at hand and in place during transport.



CUSTOMIZABLE
Molded-in fittings allow you to add pipe or rods to hold wire spools and other roll-type goods.



CASTER OPTIONS ARE AVAILABLE ON MEDIUM AND LARGE CARTS



Pneumatic casters provide a cushioned and quiet ride for fragile loads, making them ideal for rough and uneven surfaces, inside and out. Excellent on virtually all surfaces from smooth concrete to gravel.



TPR casters absorb shock and provide floor surface protection and quiet operation. Excellent on linoleum, tile, terrazzo, wood, smooth concrete, and carpet.

CART SIZES:

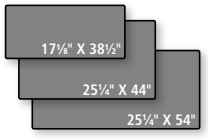

CAPACITY RANGE (lbs)
500–750

Utility and Service Carts

KEEP LOADS SECURE
Deep pocket shelves keep contents in place.



FG9T6600

STRUCTURAL FOAM CONSTRUCTION
Durable structural foam construction won't leak, rust, chip, dent, or peel.



FG450500

Lipped-Shelf Carts

NO.	COLOR	DESCRIPTION	U.S. DIMENSIONS	U.S. CAPACITY	U.S. SHIP WT/CTN	METRIC DIMENSIONS	METRIC CAPACITY	METRIC SHIP WT/CTN	CASTER TYPE	PACK
FG450088	**BLA, BEIG**	Ergo Handle Utility Cart	39" l x 17.88" w x 33.25" h	500 lb	30.8 lb	99.1 cm x 45.4 cm x 84.5 cm	226.8 kg	14.0 kg	5" TPR	1
FG452088	**BLA, BEIG**	Ergo Handle Utility Cart	44" l x 25.25" w x 39" h	500 lb	42.8 lb	111.8 cm x 64.1 cm x 99.1 cm	226.8 kg	19.4 kg	5" TPR	1
1867535	BLACK	**Executive** Ergo Handle Utility Cart w/ 5" Quiet Casters	36" l x 24" w x 32.25" h	500 lb	42.8 lb	91.4 cm x 61 cm x 81.9 cm	226.8 kg	19.4 kg	5" Quiet	1
FG452010	**BLA, BEIG**	HD 2-Shelf Ergo Handle Utility Cart (Med) with Pneumatic Casters	45.25" l x 25.88" w x 37.12" h	500 lb	63.0 lb	114.9 cm x 65.7 cm x 94.3 cm	226.8 kg	28.6 kg	8" Pneumatic	1
FG454600	**BLA, BEIG**	HD 2-Shelf Ergo Handle Utility Cart (Large)	55" l x 26" w x 33.25" h	750 lb	52.4 lb	139.7 cm x 66 cm x 84.5 cm	340.2 kg	23.8 kg	5" TPR	1
FG454610	**BLA, BEIG**	HD 2-Shelf Ergo Handle Utility Cart (Large) with Pneumatic Casters	55" l x 26" w x 33.25" h	750 lb	71.0 lb	139.7 cm x 66 cm x 84.5 cm	340.2 kg	32.2 kg	8" Pneumatic	1
FG450089	**BLA, BEIG**	Flat Handle Utility Cart	39" l x 17.88" w x 33.25" h	500 lb	31.1 lb	99.1 cm x 45.4 cm x 84.5cm	226.8 kg	14.1 kg	5" TPR	1
FG452089	**BLA, BEIG**	Flat Handle Utility Cart	45.25" l x 25.88" w x 33.25" h	500 lb	44.7 lb	114.9 cm x 65.7 cm x 84.5 cm	226.8 kg	20.3 kg	5" TPR	1
FG9T6600[A]	**BLA**	2-Shelf Flat Handle Utility Cart, 5" Casters	40.25" l x 25.63" w x 32.5" h	500 lb	30.8 lb	102.2 cm x 65.1 cm x 82.6 cm	226.8 kg	14.0 kg	5" (12.7 cm)	12
FG9T6700[A]	**BLA**	2-Shelf Flat Handle Utility Cart, 5" Casters	34.25" l x 17.375" w x 31.5" h	500 lb	42.8 lb	87.0 cm x 44.1 cm x 80.0 cm	226.8 kg	19.4 kg	5" (12.7 cm)	10

Flat-Shelf Carts

NO.	COLOR	DESCRIPTION	U.S. DIMENSIONS	U.S. CAPACITY	U.S. SHIP WT/CTN	METRIC DIMENSIONS	METRIC CAPACITY	METRIC SHIP WT/CTN	CASTER TYPE	PACK
FG450500	**BLA, BEIG**	HD 2-Shelf Ergo Handle Utility Cart (Small)	37.88" l x 19.2" w x 33.3" h	500 lb	29.5 lb	96.2 cm x 48.8 cm x 84.6 cm	226.8 kg	13.4 kg	5" TPR	1
FG452500	**BLA, BEIG**	HD 2-Shelf Ergo Handle Utility Cart (Med)	43.88" l x 25.88" w x 33.3" h	500 lb	41.0 lb	111.5 cm x 65.7 cm x 84.6 cm	226.8 kg	18.6 kg	5" TPR	1
FG454500	**BLA, BEIG**	HD 2-Shelf Ergo Handle Utility Cart (Large)	54" l x 25.25" w x 36" h	750 lb	52.4 lb	137.2 cm x 64.1 cm x 91.4 cm	340.2 kg	23.8 kg	5" TPR	1
FG450589	**BLA, BEIG**	HD 2-Shelf Flat Handle Utility Cart (Small)	37.88" l x 19.2" w x 33.3" h	500 lb	29.5 lb	96.2 cm x 48.8 cm x 84.6 cm	226.8 kg	13.4 kg	5" TPR	1
FG452589	**BLA, BEIG**	HD 2-Shelf Flat Handle Utility Cart (Med)	43.88" l x 25.88" w x 33.3" h	500 lb	41.0 lb	111.5 cm x 65.7 cm x 84.6 cm	226.8 kg	18.6 kg	5" TPR	1

[A]Pallet Pack

ACCESSORIZE AND CUSTOMIZE FOR YOUR NEEDS



FG459000 3-OUTLET POWER STRIP



FG335388 8-GALLON REFUSE BIN



FG459300 SINGLE FULL EXTENSION DRAWER (see Cart Accessories)

GTW685BSL/BPL

GE® Series 4.5 DOE Cu. Ft. Stainless Steel Capacity Washer

DIMENSIONS AND INSTALLATION INFORMATION (IN INCHES)

CIRCUIT REQUIREMENTS: An individual, properly-grounded branch circuit, with a three-prong grounding-type receptacle, protected by a 15 or 20 amp circuit breaker or a time-delay fuse, is required.

ELECTRICAL RATING: 120V, 60Hz, 10A

NOTE: Washer wall outlet must be located within 36" of service code entry. Wall outlet must not be located behind dryer.

INSTALLATION INFORMATION: Before installing, consult installation instructions packed with product for current dimensional data.



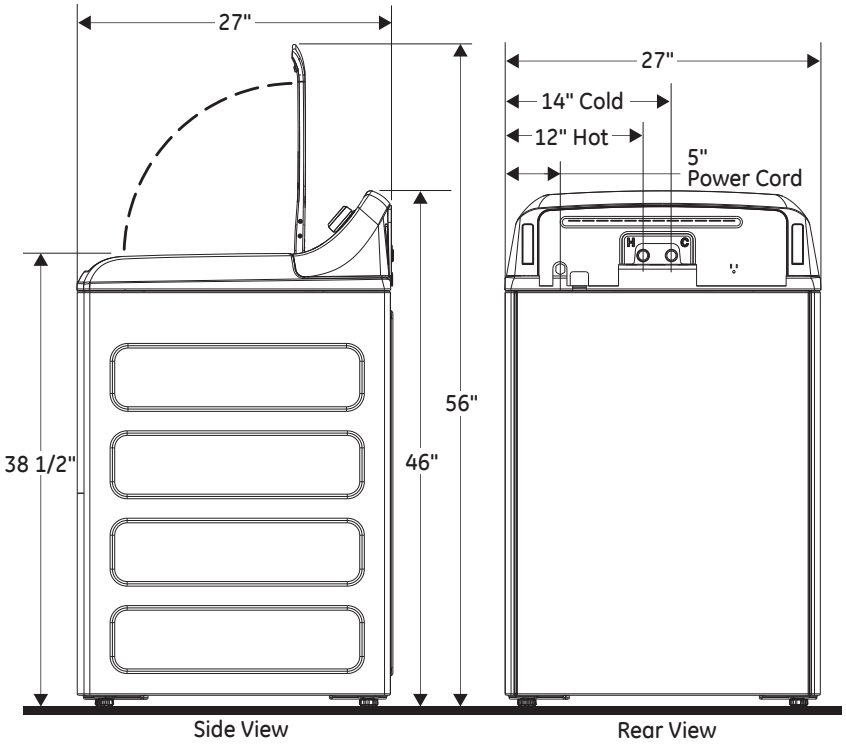



Listed by Underwriters Laboratories

GTW685BSL/BPL

GE® Series 4.5 DOE Cu. Ft. Stainless Steel Capacity Washer

FEATURES AND BENEFITS

Dual-action agitator - Powerful reversing wash action rotates your laundry for a thorough clean every time

Deep Fill – Customize your water-fill levels with just the touch of a button. Add a little extra or fill the tub to wash the way you want

Stain Removal Guide – Clean 5 of the most common stains with preprogrammed settings that modify any cycle to help remove blood, tomato, wine, dirt and grass

Warm Rinse – Choose a warm water rinse so every part of your laundry experience fits your preference

Sanitize with Oxi – Remove 99.9% of bacteria with a dedicated cycle that uses an Oxi additive to boost your detergent's cleaning power, while keeping fabrics looking and feeling their best

Auto Soak – Loosens stains by soaking up to 2 hours

Deep Rinse – When selected, the deep rinse cycle ensure clothes are rinsed of soap residue and fabric softener

Soft-close glass lid – Engineered with hydraulic suspension, so the lid always closes gently

Speed Wash – Provides a quick wash for lightly soiled items that are needed in a hurry

800-RPM spin speed – Fast spin speeds remove water efficiently and minimize dry times

Model GTW685BSLWS – White with silver backsplash

Model GTW685BPLDG – Diamond Gray

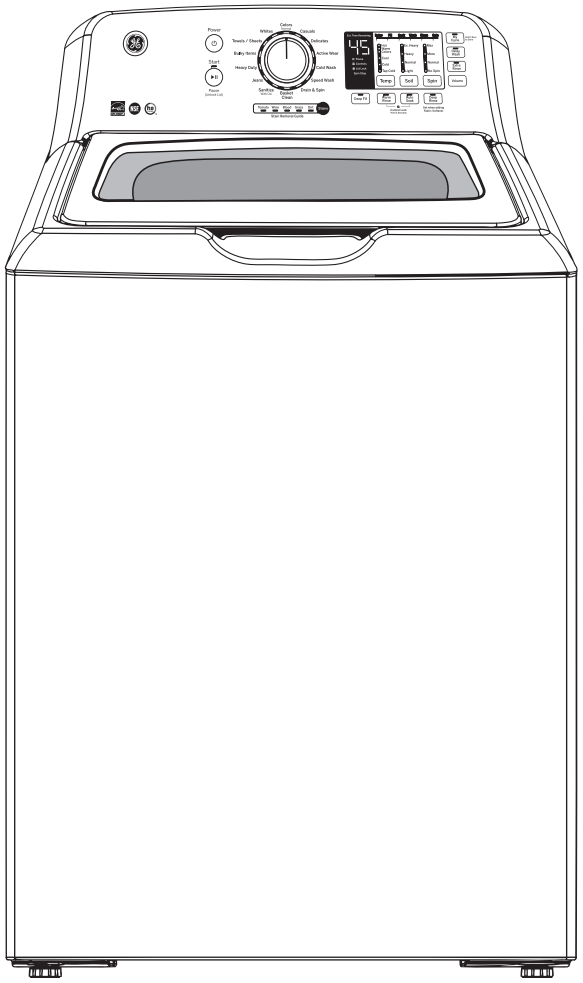

GE APPLIANCES

For answers to your Monogram, GE Café™ Series, GE Profile™ Series or GE Appliances product questions, visit our website at geappliances.com or call GE Answer Center® Service, 800.626.2000.

GE APPLIANCES

WASHERS

SAFETY INSTRUCTIONS 4

USING THE WASHER
Getting Started 6
Loading 16
Appliance Communication 17

CARE AND CLEANING 18

INSTALLATION INSTRUCTIONS 19

TROUBLESHOOTING TIPS 24

LIMITED WARRANTY 27

CONSUMER SUPPORT 28

OWNER'S MANUAL & INSTALLATION INSTRUCTIONS

GTW755
GTW750
GTW685
GTW680

ENGLISH/FRANÇAIS/ ESPAÑOL

G019

Write the model and serial numbers here:

Model #_____

Serial # _____

You can find them under the lid of the washer.

GE is a trademark of the General Electric Company. Manufactured under trademark license.

49-90586-1 01-19 GEA

Installation Instructions

Washer

If you have any questions, call GE Appliances at 800.GE.CARES (800.432.2737) or visit our Website at: GEAppliances.com
In Canada, call 800.561.3344 or visit www.GEAppliances.ca

BEFORE YOU BEGIN

Read these instructions completely and carefully.

- **IMPORTANT –** Save these instructions for local inspector's use.
- **IMPORTANT –** Observe all governing codes and ordinances.
- **Note to Installer –** Be sure to leave these instructions with the Consumer.
- **Note to Consumer –** Keep these instructions for future reference.
- **Skill level –** Installation of this appliance requires basic mechanical and electrical skills.
- **Completion time –** 1-3 hours
- Proper installation is the responsibility of the installer.
- Product failure due to improper installation is not covered under the Warranty.

PARTS SUPPLIED

- ☐ Drain Hose



- ☐ Owner's Reference Guide



- ☐ Cable Tie

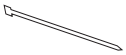

- ☐ Drain Hose Clip



- ☐ Clamp



TOOLS REQUIRED FOR WASHER INSTALLATION

- ☐ Pliers



- ☐ Level



PARTS REQUIRED (Sold separately)

- ☐ Water Hoses (2)

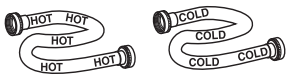

- ☐ Rubber Washers (2) and Strainer Screens (2)



- ☐ Drain Hose Extension (For discharge heights from 60" - 96"

GE Appliances Parts and Accessories

Order on-line at **GEApplianceparts.com** today, 24 hours a day or by phone at 800.626.2002 during normal business hours.

Part Number	Accessory
PM14X10002 Or PM14X10005	4 ft Rubber Water Supply Hoses 4 ft Braided Metal Water Supply Hoses
WH1X2267	Rubber Washer (1) and Screen (1)
WH49X301	Drain Hose Extension (For discharge heights from 60" - 96"

NOTE: We strongly recommend the use of new water supply hoses. Hoses degrade over time and need to be replaced every 5 years to reduce the risk of hose failures and water damage.

Installation Instructions

LOCATION OF YOUR WASHER

DO NOT Install the Washer:

1. In an area exposed to dripping water or outside weather conditions. The ambient temperature should never be below 60°F (15.6°C) for proper washer operation.
2. In an area where it will come in contact with curtains or drapes.
3. On carpet. The floor **MUST** be a hard surface with a maximum slope of 1/2″ per foot (1.27 cm per 30 cm). To make sure the washer does not vibrate or move, you may have to reinforce the floor.

NOTE: If floor is in poor condition, use 3/4″ impregnated plywood sheet solidly attached to existing floor covering.

IMPORTANT: Minimum Installation Clearances - Alcove or Closet

- If your washer is approved for installation in an alcove or closet, there will be a label on the back of the machine describing requirements.
- Minimum clearance between washer and adjacent walls or other surfaces: 0" either side, 2" front, 3" rear. Vertical space from floor to overhead shelving, cabinets, ceiling, etc. = 60".
- Closet doors must be louvered or otherwise ventilated and have at least 60 square inches of open area. If the closet contains both a washer and a dryer, doors must contain a minimum of 120 square inches of open area.

NOTE: The clearances stated on this label are minimums. Consideration must be given to providing adequate clearances for installing and servicing.

WATER SUPPLY REQUIREMENTS

WATER SUPPLY LINES - Purge Hot and Cold water supply lines for 30 seconds prior to installation of hoses and washing machine. Ensure inlet hose screens are also clean and free of debris.
WATER PRESSURE - Must be 20 psi minimum to 120 psi maximum.
WATER TEMPERATURE - Household water heater should be set to deliver water at 120° to 150°F (50° to 66°C) TO THE WASHER when hot wash is selected.
SHUTOFF VALVES - Both hot and cold shutoff valves (faucets) should be supplied.
DRAIN - Water should be drained into standpipe. Discharge height MUST NOT BE LESS THAN 30 INCHES, and no more than 8 feet above the base of the washer. Standpipe must be 1-1/2 inches minimum inside diameter and must be open to atmosphere.

1 UNPACKING THE WASHER

After the machine is in the home, remove outside packing material/carton from washer.

Remove bag (containing clamp, cable tie and drain hose clip), drain hose and Owner's Reference Guide from tub.

NOTE: Leave foam shipping material inside tub opening to hold tub in place during the rest of installation.

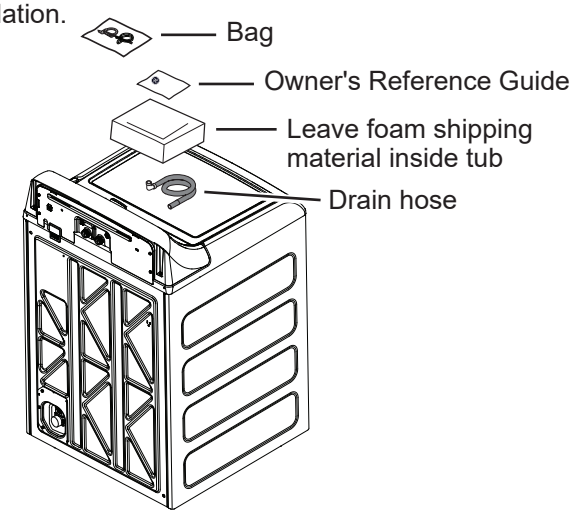

2 REMOVE THE BASE

Remove base from unit by placing foot on side of base and tipping unit back on corner post. Remove base and bring the washer back upright.

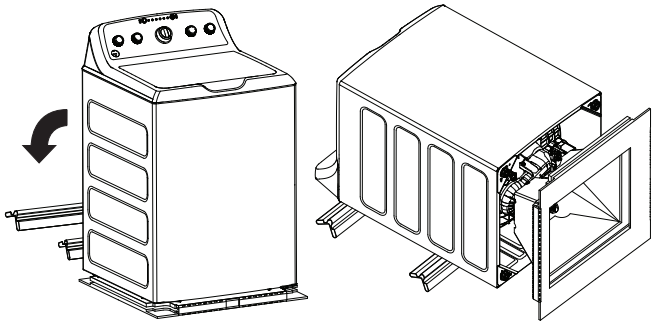

⚠WARNING - Electrical Shock Hazard

Certain internal parts are intentionally not grounded and may present a risk of electric shock only during servicing.

Service personnel – DO NOT contact the following parts while the appliance is energized: Drive Motor, Lid Lock, Water Valves, Drain Pump and Recirculation Pump.

Installation Instructions

3 CONNECT DRAIN HOSE TO WASHER

Remove the cap from the drain port, if present, before installing the drain hose.

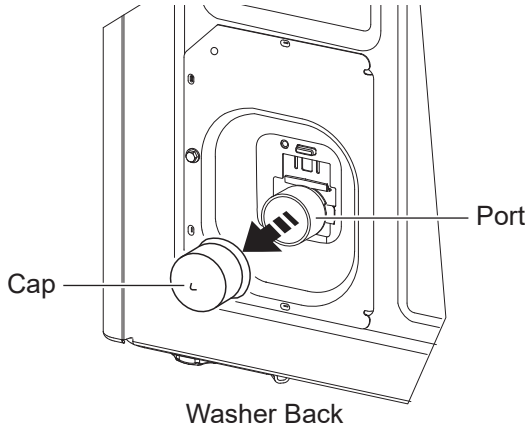

Connect drain hose to drain port on back of washer. Open clamp with pliers and slide onto hose end. Holding clamp open, push hose end onto drain port until fully seated. Release clamp between locating ribs on hose end. Outlet of hose end should be oriented vertically.

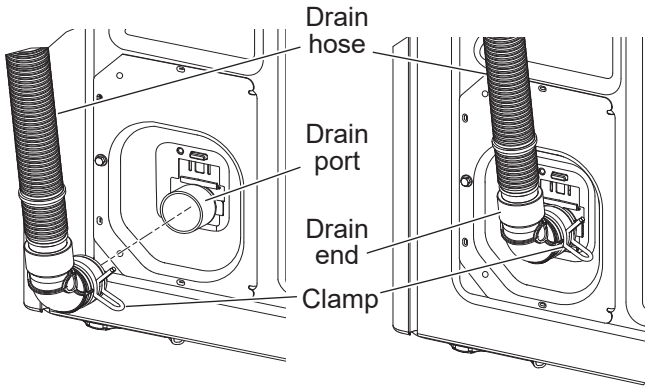

4 CONNECT WATER HOSES TO WASHER

Unplug electrical cord before installing water hoses. If not installed, install rubber washer in one end of hot water hose. Thread hot water hose onto connection labeled **H** at top rear of washer. Hand tighten and use pliers to tighten hoses between 1/8 and 1/4 turn beyond hand-tight.

If not installed, install rubber washer in one end of cold water hose **C**. Thread cold water hose onto connection labeled **C** at top rear of washer. Hand tighten and use pliers to tighten hoses between 1/8 and 1/4 turn beyond hand-tight.

Move washer as close to final location as possible, leaving room for you to make water, drain, and electrical connections to your home.

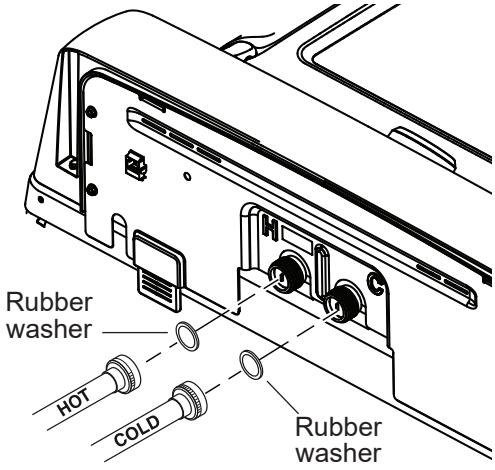

5 CONNECT WATER HOSES TO OUTLET VALVES

Determine which is HOT water line before attaching water hoses to faucets. Traditionally, HOT faucet is on left.

(If screen washers are not installed) With protruding part of screen toward you, install strainer screen/rubber washer into each of the free ends of two water hoses.

Connect hot water hose to hot water outlet valve of your home. Hand tighten and use pliers to tighten hoses between 1/4 and 1/2 turn beyond hand-tight. Open hot water valve.

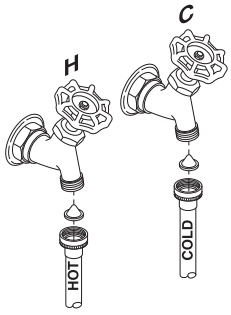

Connect cold water hose to cold water outlet valve of your home. Hand tighten and use pliers to tighten hoses between 1/4 and 1/2 turn beyond hand-tight. Open cold water valve.

Check for leaks and drips at the hose couplings. Tighten as necessary.

Installation Instructions

6 CONNECT TO DRAIN

Install drain hose clip on rear panel of washer. Route drain hose through clip and insert free end into drain opening of your home.

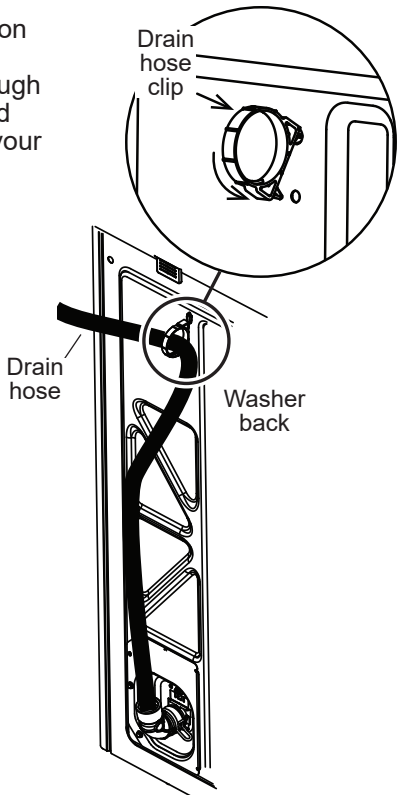

NOTE: If longer drain hose is required, order drain hose extension kit, GE Appliances part number **WH49X301**. Connect additional drain hose (contained in kit) to original hose with hose clamp (contained in kit).

If water valves and drain are built into wall, fasten drain hose to one of the water hoses with cable tie provided.

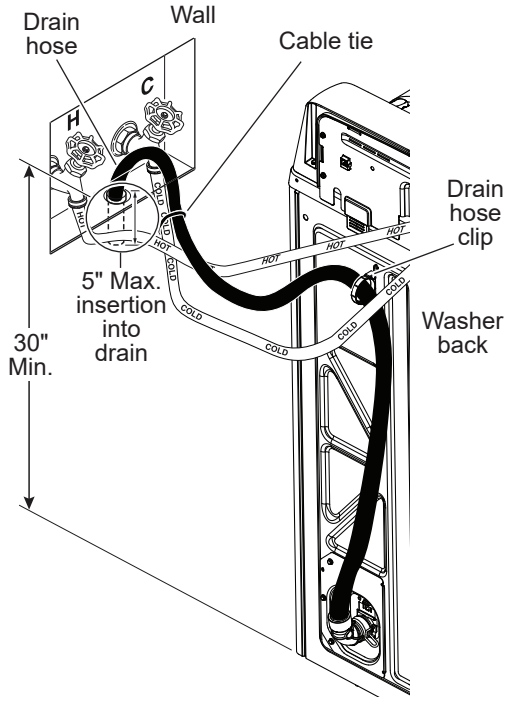

NOTE: Placing the drain hose too far down the drain pipe can cause a siphoning action. No more than 5" of hose should be in the drain pipe. There must be an air gap around the drain hose. A snug fit can also cause a siphoning action.

6 CONNECT TO DRAIN (Continued)

If your drain is a standpipe, fasten drain hose to standpipe with cable tie provided.

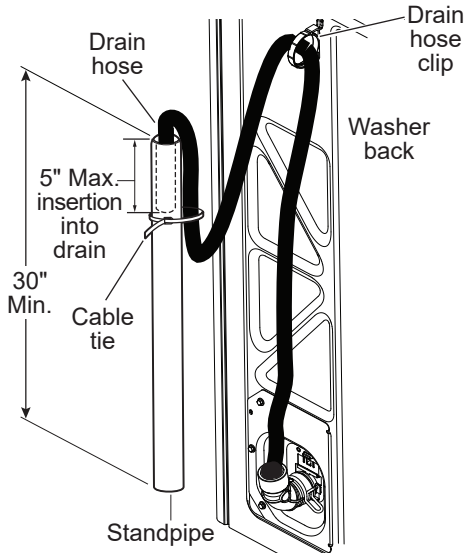

NOTE: Placing the drain hose too far down the drain pipe can cause a siphoning action. No more than 5" of hose should be in the drain pipe. There must be an air gap around the drain hose. A snug fit can also cause a siphoning action.

If drain discharge height does not meet 30" minimum height requirement, end of drain hose must be secured in drain opening of home by installer and have an air gap around hose to prevent siphoning.

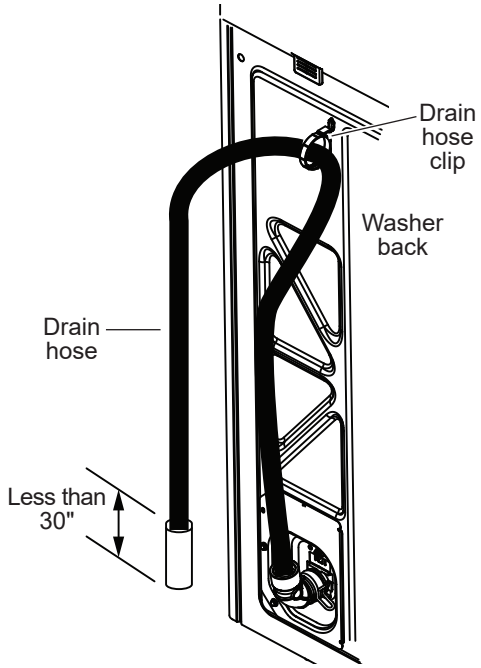

NOTE: Placing the drain hose too far down the drain pipe can cause a siphoning action. No more than 5" of hose should be in the drain pipe. There must be an air gap around the drain hose. A snug fit can also cause a siphoning action.

Installation Instructions

ELECTRICAL REQUIREMENTS

⚠WARNING - Electrical Shock Hazard

Plug into a grounded 3-prong outlet.

DO NOT remove ground prong.

DO NOT use an adapter.

DO NOT use an extension cord.

Failure to follow these instructions can result in death, fire or electrical shock.

CIRCUIT – Individual, properly polarized and grounded 15 or 20 amp circuit breaker or time-delay fuse.

POWER SUPPLY – 2 wire plus ground, 120 Volt, single phase, 60 Hz, alternating current.

Outlet Receptacle – Properly grounded 3-prong receptacle to be located so the power cord is accessible when the washer is in an installed position. If a 2-prong receptacle is present, it is the owner's responsibility to have a licensed electrician replace it with a properly grounded 3-prong grounding type receptacle.

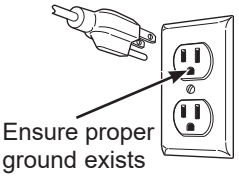

Washer must be electrically grounded in accordance with local codes and ordinances, or in the absence of local codes, with latest edition of the NATIONAL ELECTRICAL CODE, ANSI/NFPA NO. 70 or CANADIAN ELECTRICAL CODE, CSA C22.1. Check with a licensed electrician if you are not sure that the washer is properly grounded.

7 CONNECT POWER AND INSTALL

Insert plug of electrical cord into a 115V, 15- or 20-amp wall receptacle. Move washer into final position. Place level on flat top side edges of washer. Adjust all four leveling legs until washer is level left-to-right and front-to-back. Remove level.

Open tub lid. Remove and discard tub shipping material (see Step 1).

Remove plastic protector sheet from control panel face.

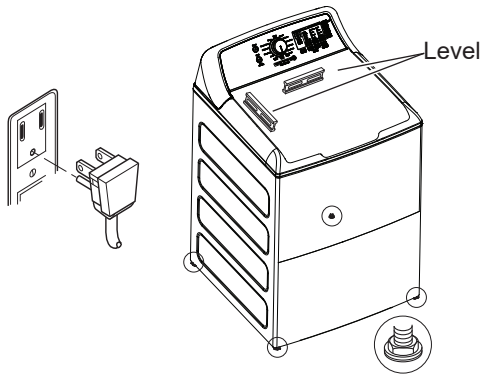

GROUNDING INSTRUCTIONS

This appliance must be grounded. In the event of malfunction or breakdown, grounding will reduce the risk of electric shock by providing a path of least resistance for electric current. This appliance is equipped with a cord having an equipment- grounding conductor and a grounding plug. The plug must be plugged into an appropriate outlet that is properly installed and grounded in accordance with all local codes and ordinances.

⚠WARNING Improper connection of the equipment-grounding conductor can result in a risk of electrical shock. Check with a qualified electrician, or service representative or personnel, if you are in doubt as to whether the appliance is properly grounded. **DO NOT** modify the plug on the power supply cord. If it will not fit the outlet, have a proper outlet installed by a qualified electrician.

If required by local codes, an external 18 gauge or larger copper ground wire (not provided) may be added. Attach to washer cabinet with a #10-16 x 1/2" sheet metal screw (available at any hardware store) to rear of washer as illustrated.

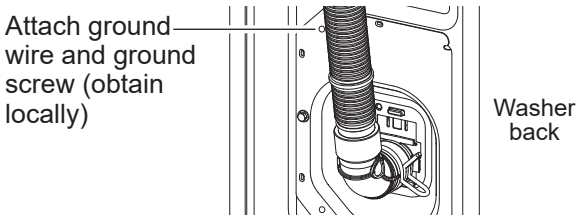

Mobile Home Installation:

Installation must conform to Standard for Mobile Homes, ANSI A119.1 and National Mobile Home Construction and Safety Standards Act of 1974 (PL93-383).

FINAL CHECKLIST

Before starting the washer, check to make sure:

- ☐ Main power is turned on.
- ☐ The washer is plugged in.
- ☐ The water faucets are turned on.
- ☐ The unit is level and all four leveling legs are firmly on the floor.
- ☐ The shipping foam and cardboard are removed.
- ☐ The drain hose is properly tied up.
- ☐ There are no leaks at the faucet, drain line or washer.
- ☐ Remove the cap from the drain port, if present, before installing the drain hose.

Run the washer through a complete cycle.

- ☐ Check for water leaks and proper operation.
- ☐ Place these instructions in a location near the washer for future reference.

GTD65EBSJ/EBPL

GE® 7.4 Cu. Ft. Capacity Aluminized Alloy Drum Electric Dryer With HE Sensor Dry

DIMENSIONS AND INSTALLATION INFORMATION (IN INCHES)

ELECTRIC DRYER RATING:			
240V	5600W	24A	60Hz
208V	4400W	22A	60Hz

EXHAUST OPTION: 4-way rear, right, left and bottom

CIRCUIT REQUIREMENTS: An individual, properly-grounded branch circuit, protected by a 30-amp circuit breaker or a time-delay fuse, is required.

NOTE: Dryer wall outlet must be located within 36" of service cord entry and acessible when dryer is mounted in position.

INSTALLATION INFORMATION: For complete information, see installation instructions packed with your dryer.

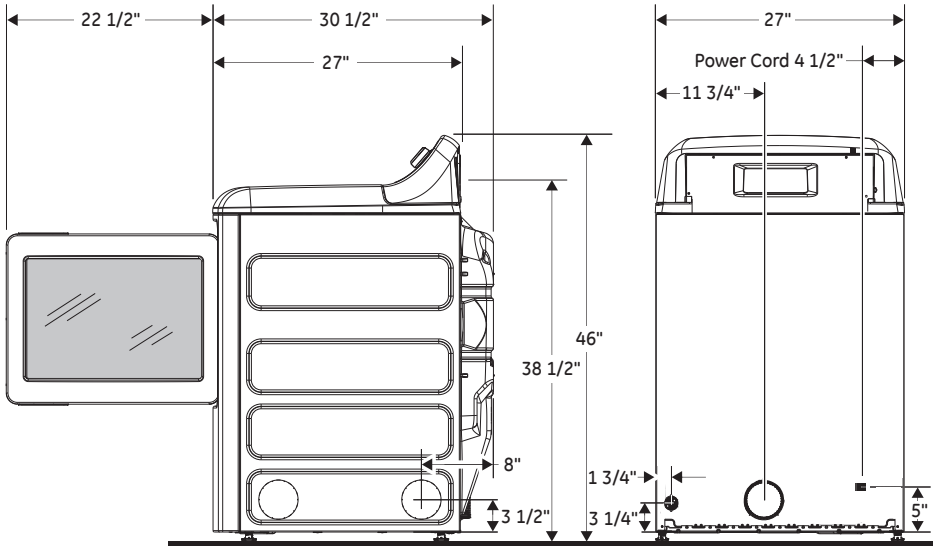

SIDE VIEW

REAR VIEW

Special Installation Requirements

ALCOVE OR CLOSET INSTALLATION:

- If your dryer is approved for installation in an alcove or closet, it will be stated on a label on the dryer back.
- The dryer MUST be exhausted to the outside.
- Minimum clearances between dryer cabinet and adjacent walls or other surfaces are: 0" either side; 1" front, top and rear
- Closet doors must be louvered or otherwise ventilated and must contain a minimum of 60 sq. in. of open area equally distributed. If this closet contains both a washer and a dryer, doors must contain a minimum of 120 sq. in. of open area equally distributed.
- No other fuel-burning appliance shall be installed in the same closet with a gas dryer.

BATHROOM OR BEDROOM INSTALLATION:

- The dryer MUST be exhausted to the outdoors.
- The installation must conform with the local codes, or in the absence of local codes, with the National Electric Code and National Fuel Gas Code, ANSI Z223 for gas dryers.

MINIMUM CLEARANCES OTHER THAN ALCOVE OR CLOSET INSTALLATION:

- Minimum clearances to combustible surfaces are: 0" both sides; 1" rear

DRYER EXHAUSTING INFORMATION: Use metal duct only, vertical and horizontal ducting.

POWER CORD LOCATIONS

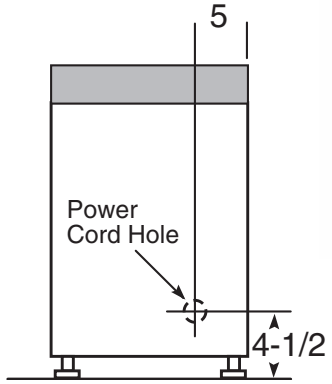

BACK VIEW





GE APPLIANCES

For answers to your Monogram, GE Café™ Series, GE Profile™ Series or GE Appliances product questions, visit our website at geappliances.com or call GE Answer Center® Service, 800.626.2000.

Listed by Underwriters Laboratories

GTD65EBSJ/EBPL

GE® 7.4 Cu. Ft. Capacity Aluminized Alloy Drum Electric Dryer With HE Sensor Dry

FOR COMPLETE INFORMATION, SEE INSTALLATION INSTRUCTIONS PACKED WITH YOUR DRYER.

DUCTING MATERIALS:

For best performance, this dryer should be vented with 4" diameter all rigid metal exhaust duct. If rigid metal duct cannot be used, then UL-listed flexible metal (semi-rigid) ducting can be used (Kit WX08X10077). In special installations, it may be necessary to connect the dryer to the house vent using a flexible metal (foil-type) duct. A UL-listed flexible metal (foil-type) duct may be used ONLY in installations where rigid metal or flexible metal (semi-rigid) ducting cannot be used AND where a 4" diameter can be maintained throughout the entire length of the transition duct. Please see installation instruction packed with your dryer for complete instructions when using flexible metal (foil type) ducting.

EXHAUST LENGTH CALCULATION:

1. Determine the number of 90° turns needed for your installation. If you exhaust to the side or bottom of dryer, add one turn.
2. The maximum length of 4" rigid (aluminum or galvanized) duct which can be tolerated is shown in the table. A turn of 45° or less may be ignored. Two 45° turns within the duct length should be treated as a 90° elbow. A turn over 45° should be treated as a 90° elbow.

Dryers must be exhausted to the outside.

CAUTION: For personal safety do not terminate exhaust into a chimney, under any enclosed house floor (crawl space), or into an attic, since the accumulated lint could create a fire hazard or moisture could cause damage. Never terminate the exhaust into a common duct or plenum with a kitchen exhaust, since the combination of lint and grease could create a fire hazard.

Exhaust ducts should be terminated in a dampered wall cap to prevent back drafts, bird nesting, etc. The wall cap must also be located at least 12" above the ground or any other obstruction with the opening pointed down.

FOR MORE INFORMATION ON VENTING KITS AND ACCESSORIES, PLEASE CALL 1-800-GE-CARES.

DRYER EXHAUSTING INFORMATION— USE METAL DUCT ONLY VERTICAL AND HORIZONTAL DUCTING

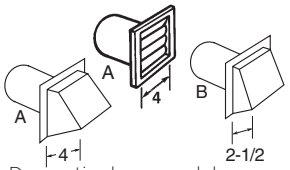

Domestic dryer models	Number of 90° turns	BEST PERFORMANCE: Maximum length of 4" dia rigid metal duct — Exhaust hood type: A 4" opening	BEST PERFORMANCE: Maximum length of 4" dia rigid metal duct — Exhaust hood type: B 2-1/2" opening
Long Vent 6.1-7.4 cu. ft. capacity electric & gas (GTD33, GTD42, GTD45, GTD65, GTX22, GTX33, GTX42 and GTX65)	0	120 ft.	90 ft.
	1	100 ft.	75 ft.
	2	85 ft.	65 ft.
	3	70 ft.	55 ft.
	4	60 ft.	45 ft.
	5	55 ft.	35 ft.

For every extra 90° elbow, reduce the allowable vent system length by 10 ft.
Two 45° elbows will be treated like one 90° elbow.
For the side exhaust installations, add one 90° elbow to the chart.
When calculating the total vent system length, you must add all the straight portions and elbows of the system (including the transition duct.

GE APPLIANCES

GTD65EBSJ/EBPL

GE® 7.4 Cu. Ft. Capacity Aluminized Alloy Drum Electric Dryer With HE Sensor Dry

FEATURES AND BENEFITS

ENERGY STAR® qualified – Meets or exceeds federal guidelines for energy efficiency for year-round energy and money savings

Up to 120 ft. venting capability – Provides flexible installation

Extended Tumble – Tumble clothes without heat to help prevent creasing and wrinkling

HE Sensor Dry – Keep your clothes looking and feeling their best. Dual thermistors continually monitor temperature with a sensor bar that measures moisture to prevent over-drying

My Cycle Settings – Dry clothes with the settings you prefer on any cycle, rather than the defaults, and store your settings for later use

Damp Alert – Alerts you when clothes are the ideal dampness for ironing, for perfectly wrinkle-free results

Model GTD65EBSJWS – White with silver backsplash

Model GTD65EBPLDG – Diamond Gray

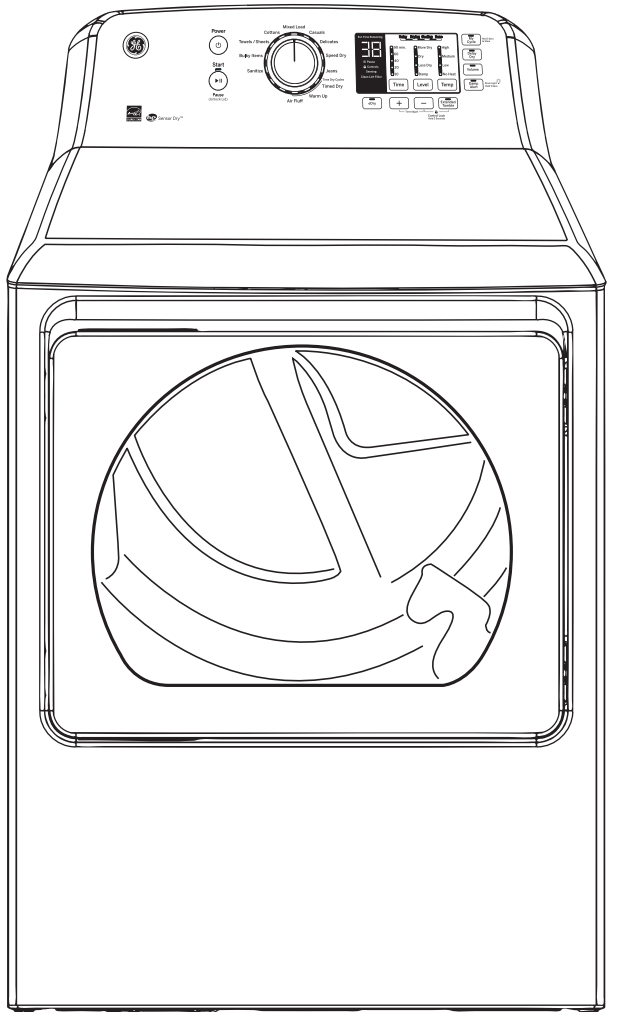

GE APPLIANCES

Listed by Underwriters Laboratories

Specification Revised 8/17

Installation Instructions

Dryers 05

Questions? Call GE Appliances at 800.GE.CARES (800.432.2737) or visit our Web site at: GEAppliances.com

BEFORE YOU BEGIN

Read these instructions completely and carefully.

- **IMPORTANT** – Save these instructions for local electrical inspector's use.
- **IMPORTANT** – Observe all governing codes and ordinances.
- Install the clothes dryer according to the manufacturer's instructions and local codes.
- **Note to Installer –** Be sure to leave these instructions with the Consumer.
- **Note to Consumer –** Keep these instructions for future reference.
- Clothes dryer installation must be performed by a qualified installer.
- This dryer **must** be exhausted to the outdoors.
- Before the old dryer is removed from service or discarded, remove the dryer door.
- Service information and the wiring diagram are located in the control console.
- Do not allow children on or in the appliance. Close supervision of children is necessary when the appliance is used near children.
- Proper installation is the responsibility of the installer.
- Product failure due to improper installation is not covered under the Warranty.
- Install the dryer where the temperature is above 50°F for satisfactory operation of the dryer control system.
- Remove and discard existing plastic or metal foil duct and replace with UL-listed duct.

⚠ WARNING **- Fire Hazard**

- Clothes dryer installation must be performed by a qualified installer.
- Install the clothes dryer according to these instructions and local codes.
- **DO NOT** install a clothes dryer with flexible plastic venting materials. If flexible metal (semi-rigid or foil-type) duct is installed, it must be UL-listed and installed in accordance with the instructions found in "Connecting the Dryer to House Vent" later in this manual. Flexible venting materials are known to collapse, be easily crushed and trap lint. These conditions will obstruct dryer airflow and increase the risk of fire.
- **DO NOT** install or store this appliance in any location where it could be exposed to water or weather.
- To reduce the risk of severe injury or death, follow all installation instructions.
- Save these instructions. (Installers: Be sure to leave these instructions with the customer.)

FOR GAS DRYERS ONLY

IN THE COMMONWEALTH OF MASSACHUSETTS, THE FOLLOWING INSTALLATION INSTRUCTIONS APPLY:

- Installation must be performed by a qualified or licensed contractor, plumber, or gasfitter qualified or licensed by the State.
- If using a ball valve, it shall be a T-handle type.
- A flexible gas connector, when used, must not exceed 3 feet.

234D2318P005
31-16775-3 12-16 GEA

Printed in Mexico

Installation Instructions

State of California Proposition 65 Warnings

⚠ WARNING This product contains one or more chemicals known to the State of California to cause cancer, and birth defects or other reproductive harm.

Gas appliances can cause low-level exposure to some of these substances, including benzene, carbon monoxide, formaldehyde, and soot, caused primarily by the incomplete combustion of natural gas or LP fuels. Exposure to these substances can be minimized by properly venting the dryer to the outdoors.

UNPACKING YOUR DRYER

Tilt the dryer sideways and remove the foam shipping pads by pulling at the sides and breaking them away from the dryer legs. Be sure to remove all of the foam pieces around the legs.

Remove literature and bag containing accessories.

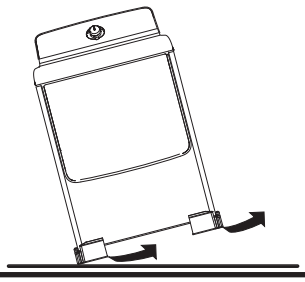

ROUGH-IN DIMENSIONS

Cubic Foot	X	Y
6.2	43 3/8" (110 cm)	26 3/4" (68 cm)
7.2	43 3/8" (110 cm)	29 1/2" (75 cm)
7.4	43 3/4" (111 cm)	30 1/2" (78 cm)
7.4 (with Riser)	45 1/2" (116 cm)	30 1/2" (78 cm)

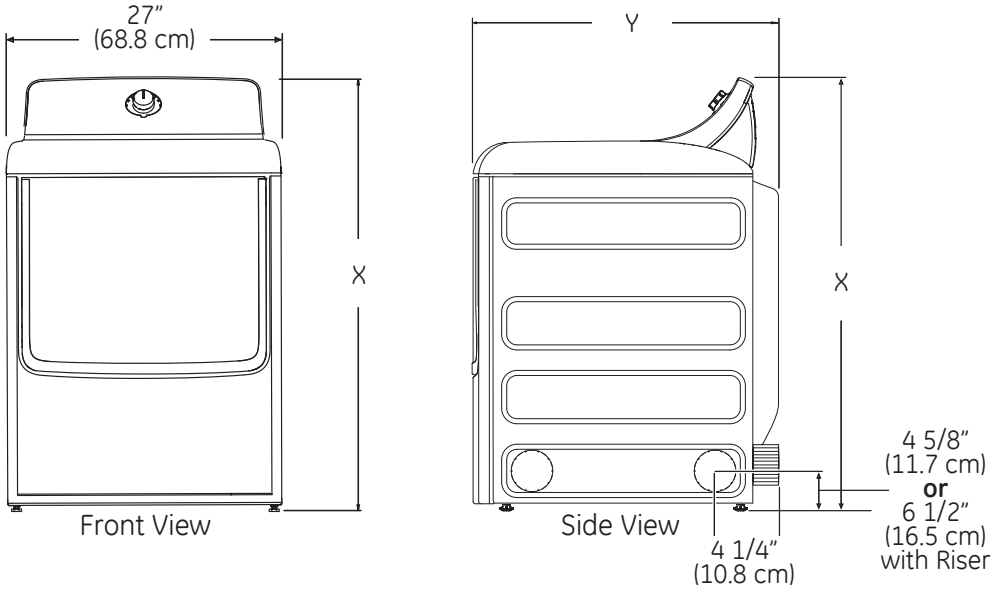

STEAM WATER HOSES:

GE Appliances strongly recommends the use of factory specified parts. These hoses are manufactured and tested to meet GE Appliances specifications.

GE Appliances strongly recommends the use of new water supply hoses. Hoses degrade over time and need to be replaced every 5 years to reduce the risk of hose failures and water damage.

Parts and Accessories

Order on-line at ***GEApplianceParts.com***, 24 hours a day or by phone at ***800.626.2002*** during normal business hours.

Part Number	Accessory
WE25X20060	Complete Kit (hoses, Y-adapter washers) (included)
OR	
WE1M847	Long Hose and
WE01X22395	Short Hose
PM14X10056	Dryer door opening vent brush (not included)
WX14X10007	LintEater™ Dryer rotary tube brush (not included)

Installation Instructions

REQUIREMENTS FOR ALCOVE OR CLOSET INSTALLATION

⚠WARNING - Explosion Hazard

Keep flammable materials and vapors, such as gasoline, away from dryer.

Place dryer at least 18" (46 cm) above the floor for a garage installation.

Failure to do so can result in death, explosion, or fire.

- The dryer MUST be vented to the outdoors. See the EXHAUSTING THE DRYER section.
- Minimum clearance between dryer cabinet and adjacent walls or other surfaces is:
  - 0" either side
  - 1" front
  - 1" rear
  - 1" top
- Consideration must be given to provide adequate clearance for installation and service.
- Closet doors must be louvered or otherwise ventilated and have at least 60 square inches of open area. If the closet contains both a washer and a dryer, doors must contain a minimum of 120 square inches of open area.

NOTE: WHEN THE EXHAUST DUCT IS LOCATED IN THE REAR OF THE DRYER, THE CONFIGURATION OF THE DUCTING MAY REQUIRE GREATER THAN 1" OF REAR CLEARANCE.

Gas Dryers Only:

- No other fuel burning appliance shall be installed in the same closet as a gas dryer.
- The dryer must be disconnected from the gas supply piping during pressure testing at pressures greater than ½ psi (3.5 kPa).
- A 1/8 inch NPT minimum plugged tapping, accessible for test gauge connection, must be installed immediately upstream of the gas supply connection to the dryer.

MINIMUM CLEARANCE OTHER THAN ALCOVE OR CLOSET INSTALLATION

Minimum clearance to combustible surfaces and for air opening are: 0" both sides; 1" rear; 1" on top. Consideration must be given to provide adequate clearance for installation and service.

MOBILE OR MANUFACTURED HOME INSTALLATION

- Installation MUST conform to the MANUFACTURED HOME CONSTRUCTION AND SAFETY STANDARD, TITLE 24, PART 32–80 or Standard CAN/CSA-Z240 MH, or, when such standard is not applicable, with AMERICAN NATIONAL STANDARD FOR MOBILE HOME, ANSI/NFPA NO. 501B.
- The dryer MUST be vented to the outdoors.
- The exhaust vent MUST be securely fastened to a non-combustible portion of the mobile home.
- The vent MUST NOT be terminated beneath a mobile or manufactured home.
- The vent duct material MUST BE METAL.
- KIT 14-D346-33 MUST be used to attach the dryer securely to the structure.
- The vent MUST NOT be connected to any other duct, vent or chimney.
- **DO NOT** use sheet metal screws or other fastening devices which extend into the interior of the exhaust vent.
- Provide an opening with a free area of at least 25 square inches for introduction of outside air into the dryer room.
- See the sections for electrical connection information.

POWER CORDS:

GE Appliances strongly recommends the use of factory specified parts. Select the power cord to fit your installation requirements.

Order on-line at ***GEApplianceParts.com***, 24 hours a day or by phone at ***800.626.2002*** during normal business hours.

Part Number	Type	Length	Amperage
WX9X2	3-Prong	4 Feet	30
WX9X3	3-Prong	5 Feet	30
WX9X4	3-Prong	6 Feet	30
WX9X18	4-Prong	4 Feet	30
WX9X19	4-Prong	5 Feet	30
WX9X20	4-Prong	6 Feet	30

Installation Instructions

CONNECTING AN ELECTRIC DRYER

(Skip for gas dryers and if your dryer already has a power cord attached)

TOOLS YOU WILL NEED

- ❒ Slip-joint pliers



- ❒ Flat-blade screwdriver

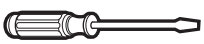

- ❒ Phillips screwdriver



- ❒ Level



MATERIALS YOU WILL NEED

- ❒ 4” dia. metal elbow



- ❒ 3/4” Strain relief (UL recognized)



- ❒ 4” Duct clamps (2) or 4” spring clamps (2)



- ❒ Safety glasses



- ❒ 4” dia. metal duct (recommended)

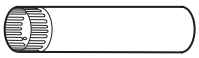

- ❒ 4” dia., UL-listed flexible metal duct (if needed)

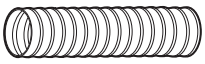

- ❒ Gloves



- ❒ Exhaust hood



- ❒ Duct tape



- ❒ Dryer power cord kit (not provided with dryer)

  UL rated 120/240V, 30A with 3 or 4 prongs. Identify the plug type as per the house receptacle before purchasing line cord.

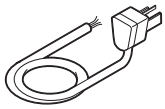

- ❒ 4” Cover plate (Kit WE49X22606)



Before making the electrical connection, turn off the circuit breaker(s) or remove the dryer’s circuit fuse(s) at the electrical box. Be sure the dryer cord is unplugged from the wall. NEVER LEAVE THE ACCESS COVER OFF THE TERMINAL BLOCK.

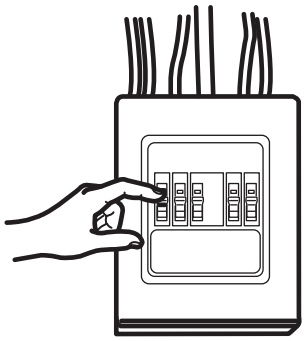

Installation Instructions

CONNECTING AN ELECTRIC DRYER (cont.)

(Skip for gas dryers and if your dryer already has a power cord attached)

ELECTRICAL CONNECTION INFORMATION FOR ELECTRIC DRYERS

For electrical connections using a power cord:

⚠ WARNING  **- Fire Hazard**

Use a new UL-listed 240V 30 amp dryer power supply cord with closed ring terminals or spade terminals with upturned ends.

Use a UL-listed strain relief.

Disconnect power before making electrical connections.

Connect neutral wire (white or center wire) to center terminal.

Ground wire (green or bare wire) must be connected to green ground connector.

Connect remaining two supply wires to remaining two terminals.

Securely tighten all electrical connections.

Replace the terminal block cover.

Failure to do so can result in death, fire or electrical shock.

GROUNDING INSTRUCTIONS

For a grounded, cord-connected dryer: This dryer must be grounded. In the event of a malfunction or breakdown, grounding will reduce the risk of electric shock by providing a path of least resistance for electric current. This dryer uses a cord having an equipment-grounding conductor and a grounding plug. The plug must be plugged into an appropriate outlet that is properly installed and grounded in accordance with all local codes and ordinances.

⚠ WARNING Improper connection of the equipment-grounding conductor can result in a risk of electric shock. Check with a qualified electrician, or service representative or personnel, if you are in doubt as to whether the appliance is properly grounded. **DO NOT** modify the plug on the power supply cord. If it will not fit the outlet, have a proper outlet installed by a qualified electrician.

SAVE THESE INSTRUCTIONS

ELECTRICAL CONNECTION INFORMATION FOR ELECTRIC DRYERS

For direct wire connections:

⚠ WARNING  **- Fire Hazard**

Use 10 gauge copper wire.

Use a UL-listed strain relief.

Disconnect power before making electrical connections.

Connect neutral wire (white or center wire) to center terminal.

Ground wire (green or bare wire) must be connected to green ground connector.

Connect remaining two supply wires to remaining two terminals.

Securely tighten all electrical connections.

Replace the terminal block cover.

Failure to do so can result in death, fire or electrical shock.

GROUNDING INSTRUCTIONS

For a permanently connected dryer: This dryer must be connected to a grounded metal, permanent wiring system, or an equipment-grounding conductor must be run with the circuit conductors and connected to the equipment-grounding terminal on the appliance.

⚠ WARNING Improper connection of the equipment-grounding conductor can result in a risk of electric shock. Check with a qualified electrician, or service representative or personnel, if you are in doubt as to whether the appliance is properly grounded.

SAVE THESE INSTRUCTIONS

Installation Instructions

CONNECTING DRYER USING 4-WIRE CONNECTION (MUST BE USED FOR MOBILE HOME INSTALLATION)

NOTE: Since January 1, 1996, the National Electrical Code requires that new constructions use a 4-wire connection to an electric dryer. A 4-wire cord must also be used where local codes do not permit grounding through the neutral.

3-wire connection is NOT for use on new construction.

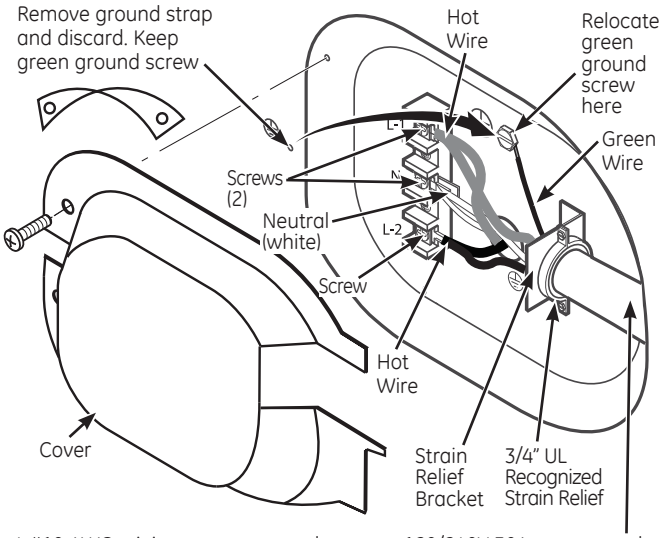

4 #10 AWG minimum copper conductors or 120/240V 30A power supply cord kit marked for use with dryers and provided with closed loop or spade terminals with upturned ends (not supplied).

1. Turn off the circuit breaker(s) (30 amp) or remove the dryer's circuit fuse at the electrical box.
2. Be sure the dryer cord is unplugged from the wall receptacle.
3. Remove the power cord cover located at the lower back.
4. Remove and discard ground strap. Keep the green ground screw for Step 7.
5. Install 3/4 in. UL-recognized strain relief to power cord entry hole. Bring power cord through strain relief.
6. Connect power cord as follows:
   - **A.** Connect the 2 hot lines to the outer screws of the terminal block (marked L1 and L2).
   - **B.** Connect the neutral (white) line to the center of the terminal block (marked N).
7. Attach ground wire of power cord with the green ground screw (hole above strain relief bracket). Tighten all terminal block screws (3) securely.
8. Properly secure power cord to strain relief.
9. Reinstall the cover.

NEVER LEAVE THE COVER OFF OF THE TERMINAL BLOCK.

CONNECTING DRYER USING 3-WIRE CONNECTION

If required, by local code, install external ground (not provided) to grounded metal, cold water pipe, or other established ground determined by a qualified electrician.

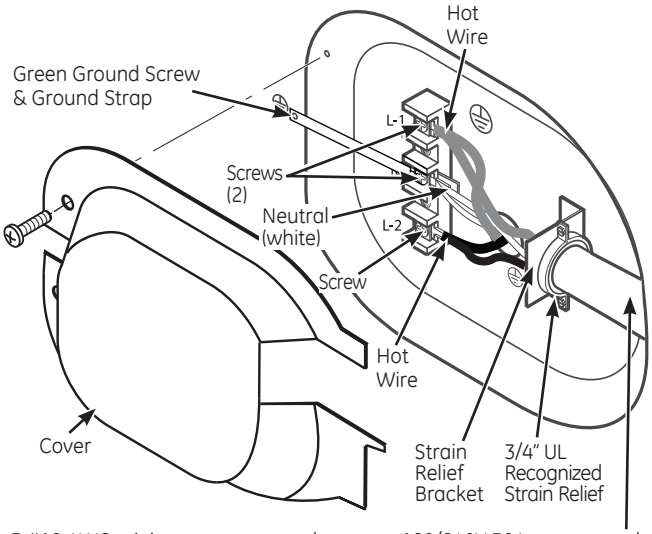

3 #10 AWG minimum copper conductors or 120/240V 30A power supply cord kit marked for use with dryers and provided with closed loop or spade terminals with upturned ends (not supplied).

3-wire Connection

Not for use in Canada.

DO NOT use for Mobile Home Installations.

NOT for use on new construction.

NOT for use on recreational vehicles.

NOT for use in areas where local codes prohibit grounding through the neutral conduction.

1. Turn off the circuit breaker(s) (30 amp) or remove the dryer's circuit fuse at the electrical box.
2. Be sure the dryer cord is unplugged from the wall receptacle.
3. Remove the power cord cover located at the lower back.
4. Install 3/4-in. UL-recognized strain relief to power cord entry hole. Bring power cord through strain relief.
5. Connect power cord as follows:
   - **A.** Connect the 2 hot lines to the outer screws of the terminal block (marked L1 and L2).
   - **B.** Connect the neutral (white) line to the center of the terminal block (marked N).
6. Be sure ground strap is connected to neutral (center) terminal of block and to green ground screw on cabinet rear. Tighten all terminal block screws (3) securely.
7. Properly secure power cord to strain relief.
8. Reinstall the cover.

NEVER LEAVE THE COVER OFF OF THE TERMINAL BLOCK.

Installation Instructions

EXHAUSTING THE DRYER

⚠ WARNING - Fire Hazard

This dryer MUST be vented to the outdoors.

Use only 4" rigid metal ducting for the home exhaust duct.

Use only 4" rigid metal or UL-listed dryer transition duct to connect the dryer to the home exhaust.

DO NOT use a plastic vent.

DO NOT exhaust into a chimney, kitchen exhaust, gas vent, wall, ceiling, attic, crawl space, or concealed space of a building.

DO NOT install a screen in or over the exhaust duct.

DO NOT install a booster fan in the exhaust duct.

DO NOT use duct longer than specified in the exhaust length table.

Failure to follow these instructions can result in death or fire.

TOOLS AND MATERIALS YOU WILL NEED TO INSTALL EXHAUST DUCT

❒ Phillips-head screwdriver



❒ Duct tape or duct clamp



❒ Rigid or UL-listed flexible metal 4" (10.2 cm) duct

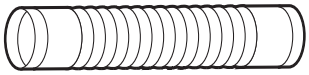

❒ Drill with 1/8" drill bit (for bottom venting)

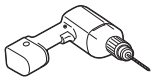

❒ Hacksaw

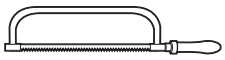

❒ Vent hood



PARTS AVAILABLE FROM GEAPPLIANCES.COM OR LOCAL SERVICE ORGANIZATIONS

PM8X85	Outdoor exhaust hood
PM08X10085	8' Flexible metal clothes dryer transition duct with 2 clamps
WX08X10130	4" Dryer exhaust clamp
WE49X22606	Rear exhaust opening cover, for side or bottom vented dryers

CONNECTING THE DRYER TO HOUSE VENT

RIGID METAL TRANSITION DUCT

- For best drying performance, a rigid metal transition duct is recommended.
- Rigid metal transition ducts reduce the risk of crushing and kinking.

UL-LISTED FLEXIBLE METAL CLOTHES DRYER TRANSITION DUCT

- If rigid metal cannot be used, then UL-LISTED flexible metal clothes dryer transition duct (GE Appliances part – PM08X10085) can be used.
- Never install transition duct in walls, ceilings, floors or other enclosed spaces.
- Total length of transition duct should not exceed 8' (2.4 m).
- For many applications, installing elbows at both the dryer and the wall is highly recommended (see illustrations at right). Elbows allow the dryer to sit close to the wall without kinking and/or crushing the transition duct, maximizing drying performance.
- Avoid resting the duct on sharp objects.

UL-LISTED FLEXIBLE METAL (FOIL-TYPE) TRANSITION DUCT

- In special installations, it may be necessary to connect the dryer to the home exhaust vent using flexible metal (foil-type) transition duct. UL–LISTED universal flexible dryer transition duct (GE Appliances parts – PM8X73 or WX8X73) may be used ONLY in installations where rigid metal or flexible metal transition ducting cannot be used AND where a 4" diameter can be maintained throughout the entire length of the transition duct.
- In Canada and the United States, only transition ducts that comply with "**UL 2158A STANDARD FOR CLOTHES DRYER TRANSITION DUCT**" shall be used.
- Avoid resting the duct on sharp objects.
- For best drying performance:
  1. Slide one end of the duct over the clothes dryer outlet pipe.
  2. Secure the duct with a clamp.
  3. With the dryer in its permanent position, extend the duct to its full length. Allow 2" of duct to overlap the exhaust pipe. Cut off and remove excess duct. Keep the duct as straight as possible for maximum airflow.
  4. Secure the duct to the exhaust pipe with the other clamp.

Installation Instructions

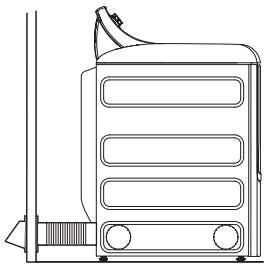

• **DO** cut duct as short as possible and install straight into wall.

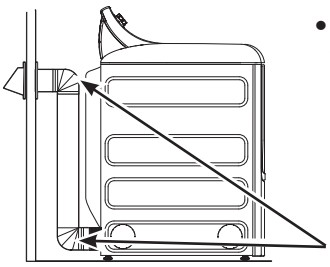

• **DO** use elbows when turns are necessary.

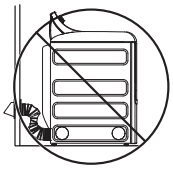

• **DO NOT** bend or collapse ducting. Use elbows if turns are necessary.

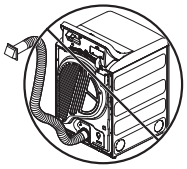

• **DO NOT** use excessive exhaust length. Cut duct as short as possible.

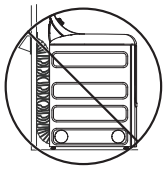

• **DO NOT** crush duct against the wall.

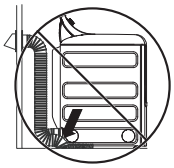

• **DO NOT** set dryer on duct.

EXHAUST LENGTH

Using exhaust longer than specified length will:

- Increase the drying times and the energy cost.
- Reduce the dryer life.
- Accumulate lint, creating a potential fire hazard.

The correct exhaust installation is <u>YOUR RESPONSIBILITY</u>.

Problems due to incorrect installation are not covered by the warranty.

The MAXIMUM ALLOWABLE length of the exhaust system depends upon the type of duct, number of turns, the type of exhaust hood (wall cap) and all conditions noted on the chart.

- Internal elbows added for side or bottom vent conversions must be included in the total elbow count.
- Any elbow greater than 45° should be treated as a 90° elbow.
- Two 45° elbows will be treated like one 90° elbow.
- For every additional 90° elbow, reduce the allowable vent system length by 10 feet.
- When calculating the total vent system length, you must add all the straight portions and elbows of the system (including the transition duct).

EXHAUST LENGTH

	RECOMMENDED MAXIMUM LENGTH	
	Exhaust Hood Types	
	Recommended	Use only for short run installations
	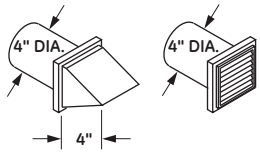	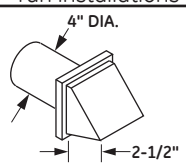
No. of 90° Elbows	Rigid Metal	Rigid Metal
0	120 Feet	90 Feet
1	100 Feet	75 Feet
2	85 Feet	65 Feet
3	70 Feet	55 Feet
4	60 Feet	45 Feet
5	55 Feet	35 Feet

Installation Instructions

EXHAUSTING THE DRYER (cont.)

EXHAUST SYSTEM CHECKLIST

HOOD OR WALL CAP

- Terminate in a manner to prevent back drafts or entry of birds or other wildlife.
- Termination should present minimal resistance to the exhaust airflow and should require little or no maintenance to prevent clogging.
- Wall caps must be installed at least 12" above ground level or any other obstruction with the opening pointed down.

SEPARATION OF TURNS

- For best performance, separate all turns by at least 4 ft. of straight duct, including distance between last turn and dampened wall cap.

SEALING OF JOINTS

- All joints should be tight to avoid leaks. The male end of each section of duct must point away from the dryer.
- Duct joints should be made air- and moisture-tight by wrapping the overlapped joints with duct tape or aluminum tape.
- Do not assemble ductwork with any fasteners that extend into the duct. These fasteners can accumulate lint, creating a potential fire hazard.
- Horizontal runs should slope down towards the outdoors 1/4" per foot.
- Provide an access for inspection and cleaning of the exhaust system, especially at turns and joints. Exhaust system shall be inspected and cleaned at least once a year.

INSULATION

- Ductwork that runs through an unheated area or is near air conditioning should be insulated to reduce condensation and lint buildup.

BEFORE YOU BEGIN

- Remove and discard existing plastic or metal foil duct and replace with UL-listed duct.
- Remove any lint from the wall exhaust opening.

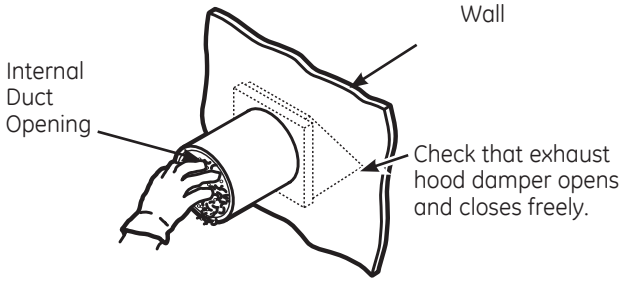

STANDARD REAR EXHAUST

We recommend that you install your dryer before installing your washer. This will permit direct access for easier exhaust connection.

Slide the end of the exhaust duct on the back of the dryer and secure with duct tape or a duct clamp.

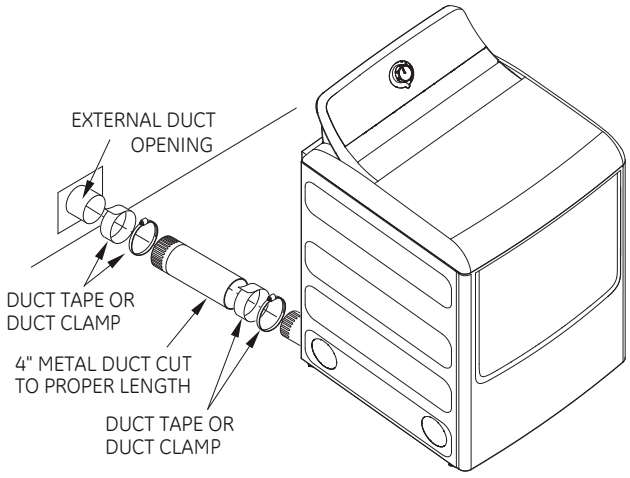

NOTE: We strongly recommend using rigid metal exhaust duct. However, if flexible ducting is used it must be UL-Listed metal, not plastic.

- For straight-line installation, connect the dryer exhaust to the wall, using duct tape or a duct clamp.

RECOMMENDED CONFIGURATION TO MINIMIZE EXHAUST BLOCKAGE

Using duct elbows will prevent duct kinking and collapsing.

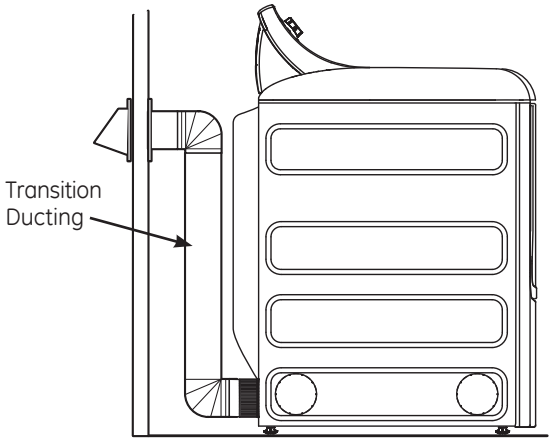

Installation Instructions

SIDE OR BOTTOM VENTING

Dryer Exhaust to right of cabinet for Electric models only.

Dryer Exhaust to left of cabinet for Gas and Electric models.

Dryer Exhaust to the bottom of cabinet for Gas and Electric models.

⚠WARNING - Fire Hazard

Disconnect dryer from electrical supply.

Wear gloves and arm guards.

Close the back opening with cover plate (Kit WE49X22606).

Failure to do so may result in fire, electrical shock or lacerations.

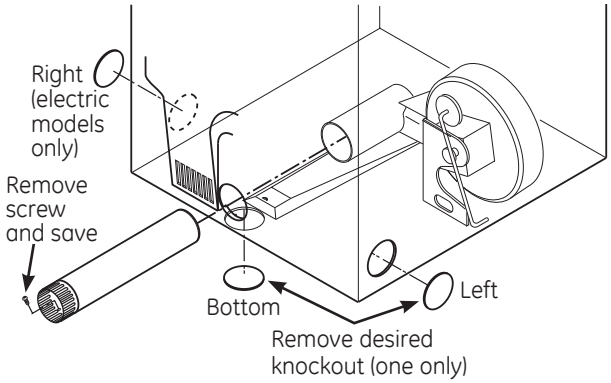

Detach and remove the right (electric models only), left or bottom knockout as desired. Remove the screw inside the dryer exhaust duct and save. Pull the duct out of the dryer.

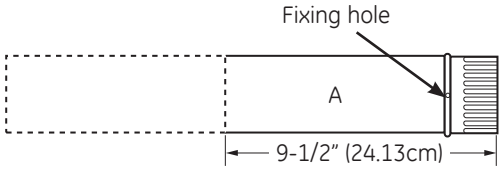

For models GTD60, GTD65 and GTD68 only, use the dimension below.

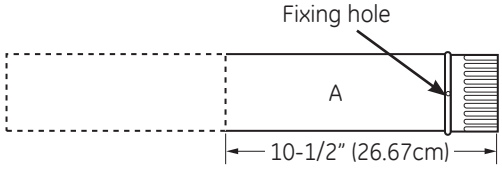

Cut the duct as shown and keep portion A.

TAB LOCATION

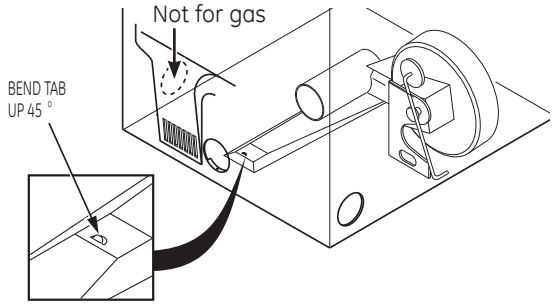

Through the rear opening, locate the tab in the middle of the appliance base. Lift the tab to about 45°, using a flat-blade screwdriver.

ADDING A NEW DUCT

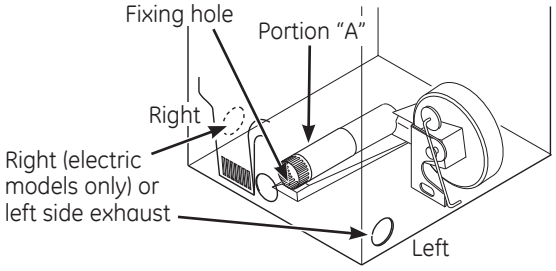

Reconnect the cut portion (A) of the duct to the blower housing. Make sure that the shortened duct is aligned with the tab in the base. Use the screw saved previously to secure the duct in place through the tab on the appliance base.

ADDING ELBOW AND DUCT FOR EXHAUST TO SIDE OF CABINET

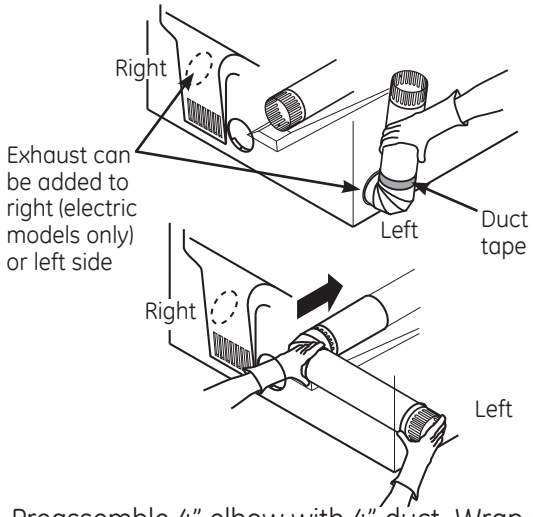

- Preassemble 4" elbow with 4" duct. Wrap duct tape around joint.
- Insert duct assembly, elbow first, through the side opening and connect the elbow to the dryer internal duct.

Be sure not to pull or damage the electrical wires inside the dryer when inserting the duct.

Installation Instructions

EXHAUSTING THE DRYER (cont.)

SIDE OR BOTTOM VENTING (cont.)

ADDING ELBOW AND DUCT FOR EXHAUST TO LEFT OR RIGHT SIDE OF CABINET (cont.)

- Apply duct tape as shown on the joint between the dryer internal duct and the elbow, and also the joint between the elbow and the side duct.

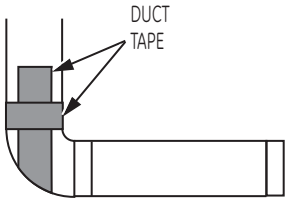

Use 4" rigid metal ducting only inside the dryer. Internal duct joints must be secured with tape, otherwise they may separate and cause a safety hazard.

ADDING ELBOW FOR EXHAUST THROUGH BOTTOM OF CABINET

- Insert the elbow through the rear opening and connect it to the dryer internal duct.
- Apply duct tape as shown on the joint between the dryer internal duct and the elbow, and also the joint between the elbow and the bottom duct.

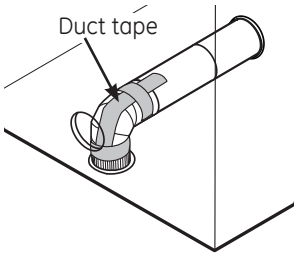

Internal duct joints must be secured with tape; otherwise, they may separate and cause a safety hazard.

ADDING COVER PLATE TO REAR OF CABINET

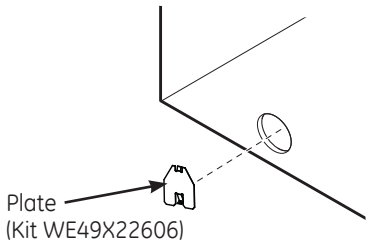

Connect standard metal elbows and ducts to complete the exhaust system. Cover back opening with a plate (Kit WE49X22606) available from your local service provider. Place dryer in final location.

NEVER LEAVE THE BACK OPENING WITHOUT THE PLATE. (Kit WE49X22606.)

FINAL SETUP

1 LEVEL THE DRYER

Stand the dryer upright near the final location and adjust the leveling legs at the corners to ensure the dryer is level side-to-side and front-to-back. Then, adjust the two anti-tip legs at the front inner corners, taking care that they are touching the floor to avoid unit tip over. The installation is not complete until this process is finished.

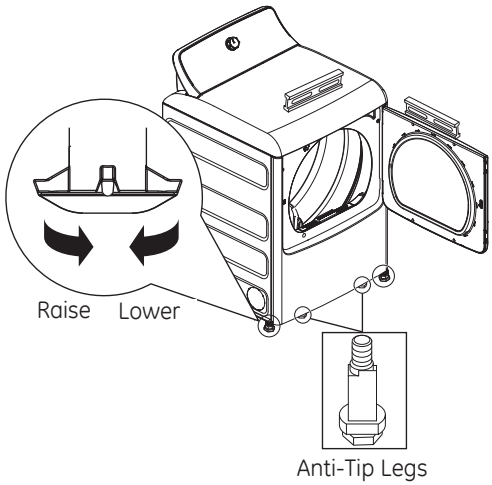

2 PLUG DRYER IN

Ensure proper ground exists before use.

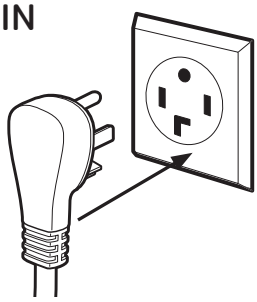

3 DRYER START-UP

Press the **Power** button.



NOTE: If the dryer has been exposed to temperatures below freezing for an extended period of time, allow it to warm up before pressing **Power**. Otherwise, the display will not come on.

The dryer is now ready for use.

Installation Instructions

REVERSING THE DOOR

ABOUT REVERSING THE DOOR

IMPORTANT NOTES:

- Read the instructions all the way through before starting.
- Handle parts carefully to avoid scratching paint.
- Set screws down by their related parts to avoid using them in the wrong places.
- Provide a non-scratch work surface for the door.
- Normal completion time to reverse the door swing is 30–60 minutes.

IMPORTANT:

Once you begin, do not move the cabinet until door swing reversal is completed. These instructions are for changing the hinges from the right side to the left side - if you ever want to switch them back to the right side, follow these same instructions and reverse all references to the left and right.

Tools needed:

- Quadrex #1 bit screwdriver otherwise standard #2 Phillips screwdriver
- Tape-tipped putty knife
- Small flat blade screwdriver

Before you start

Unplug the dryer from its electrical outlet

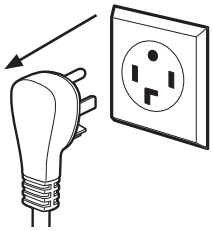

Choose the **REVERSING THE DOOR** instructions A or B for your model.

A REVERSING THE DOOR - SOLID DOOR MODELS

1 Open the door approximately 130 degrees. With a putty knife, remove the 4 plastic caps located along the left side of the front panel and set them aside.

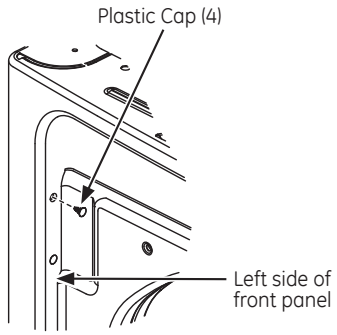

A REVERSING THE DOOR - SOLID DOOR MODELS (cont.)

2 Remove the bottom screw from each hinge (right side) and partially insert them into each top hinge hole on the left side.

NOTE: All 4 front panel hinge screws will now be in the top hinge holes - 2 on the left and 2 on the right.

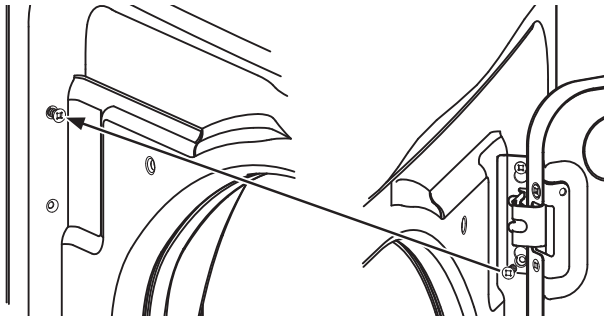

3 Loosen each top hinge screw on right side. Remove the door and place it on a protective flat surface to avoid any damage.

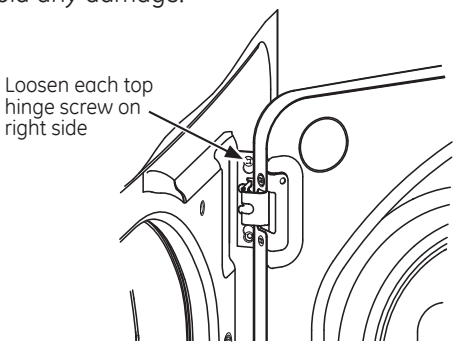

4 Remove both the blind plate and the strike plate and install them in opposite positions.

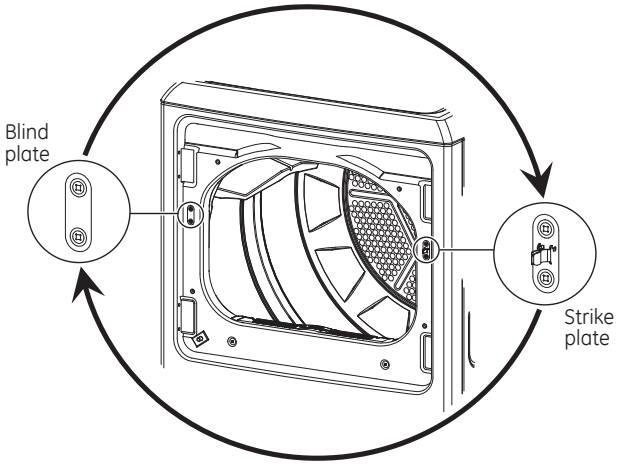

Installation Instructions

REVERSING THE DOOR (cont.)

A REVERSING THE DOOR - SOLID DOOR MODELS (cont.)

5 Mount the door on the 2 upper left side hinge screws installed in step 2. Move the hinge screws loosened in step 3 into the lower left side screw holes and firmly tighten all 4 screws.

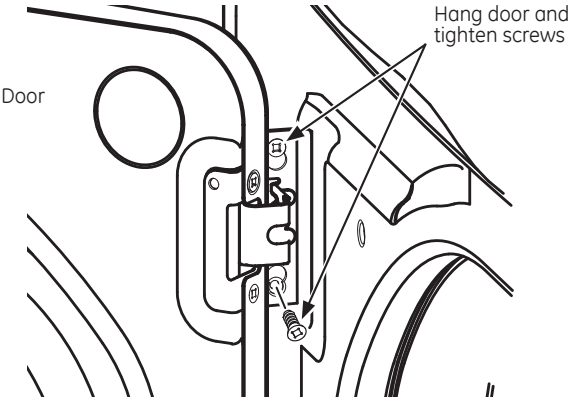

6 Install the 4 plastic caps removed in step 1 into the 4 right side front panel holes.

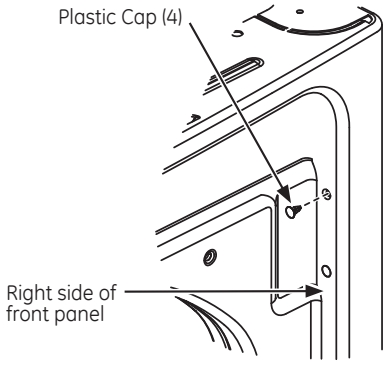

NOTE: To return the door to the original setup, follow these instructions, swapping "left" and "right".

When you finish

Plug the dryer back into its electrical outlet.

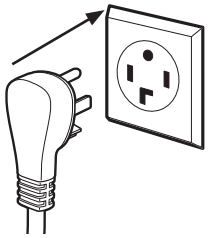

Installation Instructions

REVERSING THE DOOR

B REVERSING THE DOOR - GLASS PANEL DOOR MODELS

1 Open the door approximately 130 degrees. With a putty knife, remove the 4 plastic caps located along the left side of the front panel and set them aside.

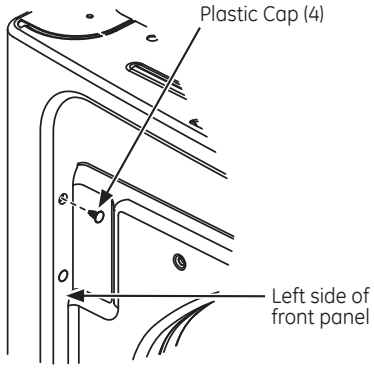

2 Remove the bottom screw from each hinge (right side) and partially insert them into each top hinge hole on the left side.

NOTE: All 4 front panel hinge screws will now be in the top hinge holes - 2 on the left and 2 on the right.

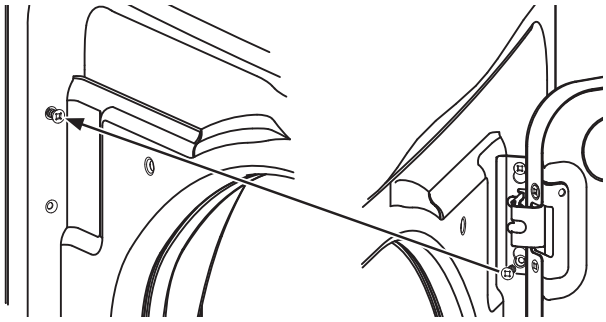

3 Loosen each top hinge screw on right side. Remove the door and place it on a protective flat surface to avoid any damage.

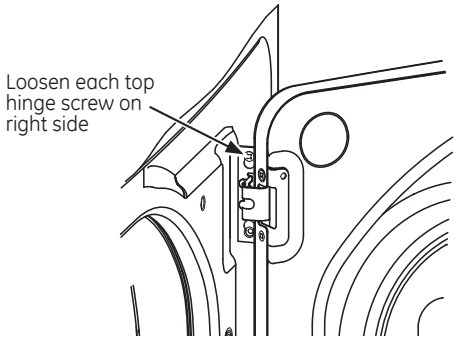

B REVERSING THE DOOR - GLASS PANEL DOOR MODELS (cont.)

4 Remove both the blind plate and the strike plate and install them in the opposite positions.

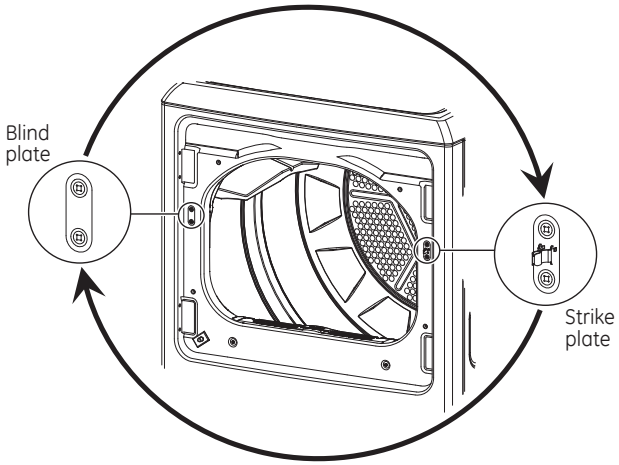

5 Remove the 4 door hinge screws, 6 inside screws and 2 pocket screws. Lift the inner door upwards using a flat blade screwdriver.

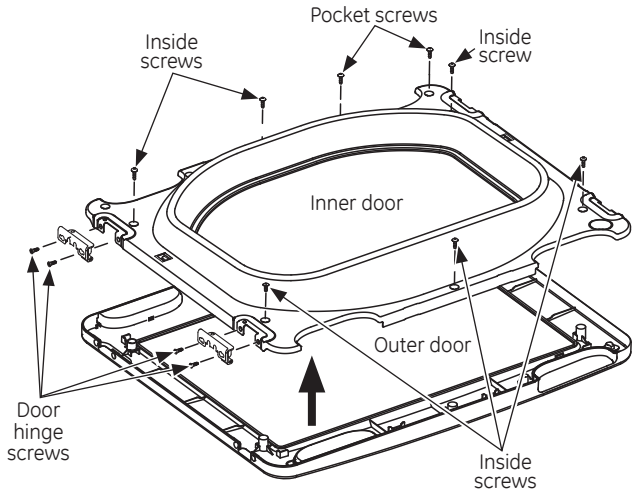

Installation Instructions

REVERSING THE DOOR (cont.)

B REVERSING THE DOOR - GLASS PANEL DOOR MODELS (cont.)

6 Remove and swap the 2 plastic caps and the 2 hinges.

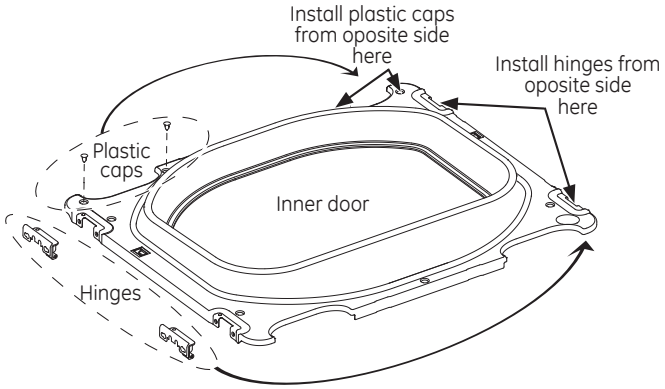

7 Rotate the outer door 180 degrees, mount the inner door back into the outer door frame and secure with the screws removed in step 5. Make sure you mount the hinges on the side opposite the pocket.

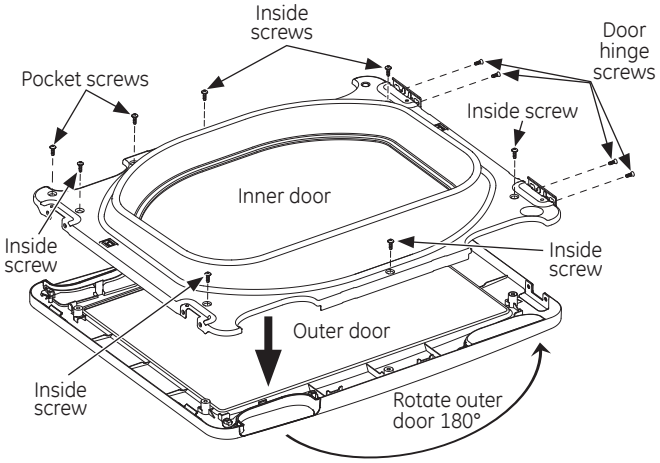

B REVERSING THE DOOR - GLASS PANEL DOOR MODELS (cont.)

8 Mount the assembled door on the 2 upper left side hinge screws installed in step 2. Move the hinge screws loosened in step 2 into the lower left side screw holes and firmly tighten all 4 screws.

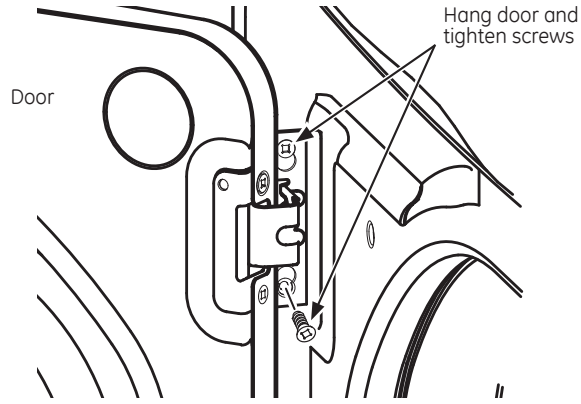

9 Install the 4 plastic caps removed in step 1 into the 4 right side front panel holes.

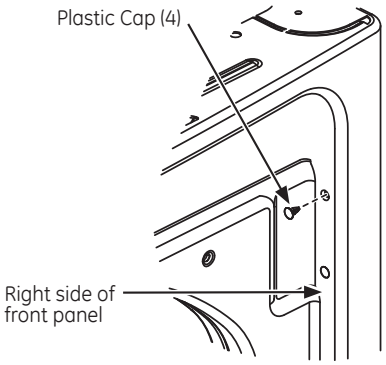

NOTE: To return the door to the original setup, follow these instructions, swapping "left" and "right".

When you finish

Plug the dryer back into its electrical outlet.

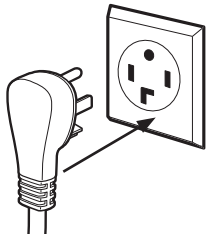

3026

Rubbermaid®
Commercial Products

COLLAPSIBLE X-CART



EXECUTIVE SERIES™

SMART DESIGN. TRUSTED EXPERIENCE.

INTRODUCTION

INTRODUCING COLLAPSIBLE X-CART

The Collapsible X-Cart is a versatile system you can rely on for efficient performance without compromising image. With multiple models to choose from, these easy-to-maneuver basket trucks efficiently transport a wide variety of materials and then conveniently collapse to enable efficient storage to improve organization.

Engineered to weather the fast-paced demands in commercial facilities, this best-in-class system features unmatched durability with industry-leading weight-load capacities to increase worker productivity. Furthermore, the Collapsible X-Cart system is thoughtfully designed to operate easily, quietly, and discreetly throughout almost any facility to enhance image.



SMART DESIGN. TRUSTED EXPERIENCE.



IMPROVED ORGANIZATION

Compact, collapsible frame enables efficient storage for improved organization. The cart's footprint reduces by 75% to just 4.5" wide when collapsed. Unit stands upright in the collapsed position.



COLLAPSIBLE X-CART

EXECUTIVE SERIES™



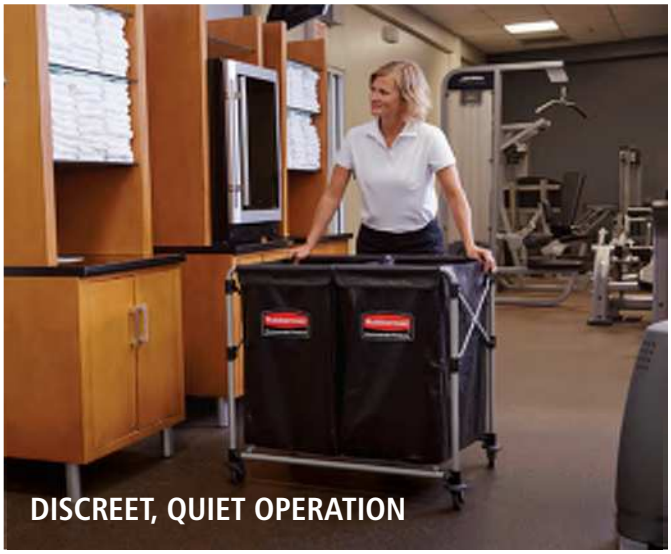

INCREASED PRODUCTIVITY

With industry-leading capacity of up to 220 lbs., the versatile Collapsible X-Cart system delivers reliable, long-lasting performance and superior maneuverability to increase worker productivity.

ENHANCED IMAGE

Reduce noise during transport with premium, quiet casters. Discreet colors, sleek design, and optional cover to conceal supplies provide professional appearance and enhance image.



COLLAPSIBLE X-CART

EXECUTIVE SERIES™

ENHANCE ORGANIZATION, PRODUCTIVITY, AND IMAGE IN ANY COMMERCIAL FACILITY








HOSPITALITY
- Housekeeping
- Laundry
- Pool and Spa
- Maintenance
- Janitorial
- Collection

HEALTHCARE
- Housekeeping
- Laundry
- Locker Room
- Maintenance
- Janitorial

FOODSERVICE
- Kitchen
- Maintenance
- Janitorial
- Collection

SPA AND FITNESS
- Locker Room
- Fitness Studio
- Janitorial
- Collection

SCHOOLS AND UNIVERSITIES
- Locker Room
- Laundry
- Janitorial
- Collection

OFFICE BUILDING
- Mail Room
- Janitorial
- Collection



1881749 – Collapsible X-Cart
(4 Bushels; 150 L)
Ultra-compact model ideal for transporting smaller loads



1881750 – Collapsible X-Cart
(8 Bushels; 300 L)
Easily accommodates large, bulky loads



1881781 – Multi-Stream Collapsible X-Cart
(2 x 4 Bushels; 300 L)
Configurable option provides ability to easily divide and sort material

Collapsible X-Cart

No.	Description	Color	Capacity	Length	Width (Collapsed)	Height	Case Pack
1881749	Collapsible X-Cart – 4 Bushels	Black	220 lbs.	24.1"	20.3" (6.6")	33"	1
1881750	Collapsible X-Cart – 8 Bushels	Black	220 lbs.	24.1"	35" (6.6")	33"	1
1881781	Collapsible X-Cart Multi-Stream (2 x 4 Bushels)	Black	220 lbs.	24.1"	35" (6.6")	33"	1

Collapsible X-Cart Accessories

No.	Description	Color	Capacity	Length	Width	Height	Case Pack
1881782	Collapsible X-Cart Replacement Bag (for 1881749 and 1881781)	Black	220 lbs.	15.3"	22.4"	27.3"	2
1881783	Collapsible X-Cart Replacement Bag – 8 Bushels	Black	220 lbs.	30.5"	22.4"	27.3"	2
1889863	Collapsible X-Cart Cover (for 1881749)	Black	–	25.4"	19.88"	–	1
1889864	Collapsible X-Cart Cover (for 1881750 and 1881781)	Black	–	26.25"	35"	–	1

SOURCE: https://www.webstaurantstore.com/rubbermaid-collapsible-8-bushel-x-cart-with-large-black-cover/6901888REGKT.html

Work Smarter.

www.rubbermaidcommercial.com | **1-800-347-9800** A Newell Rubbermaid Brand

© 2013 by Rubbermaid Commercial Products LLC 3124 Valley Avenue, Winchester, VA 22601
RCP-175 REV 3/15

Slim Jim® Recycling Station Assembly Guide

Parts Included:

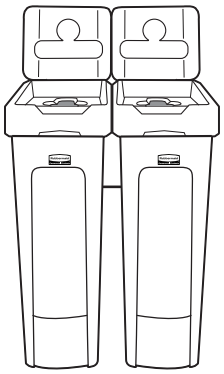



Bases



Connectors

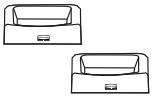

Lids

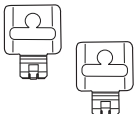

Billboards

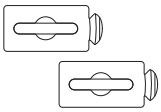

Lid inserts

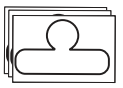

Labels x10

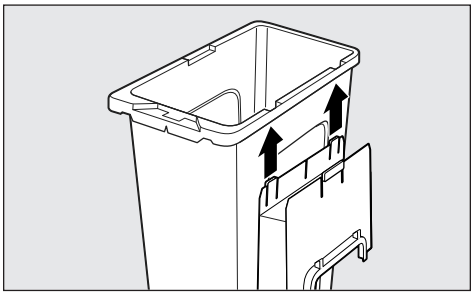

Align Base to Connector

1. Align connector underneath base rim, matching tabs to respective holes.

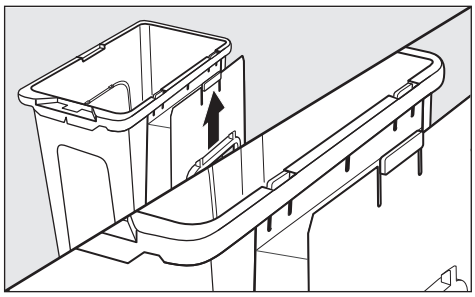

Attach Connector to Base

2. Slide connector upward until tabs click into place.

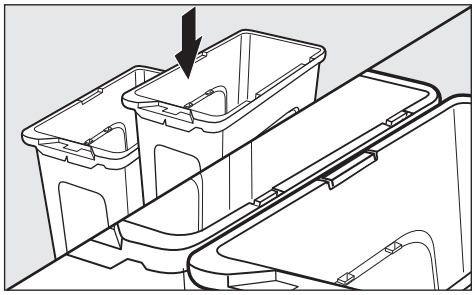

Connect Additional Base

3. Lift second base on top of connector, pressing down on base to snap tabs into place.

Slim Jim® Recycling Station Assembly Guide (continued)

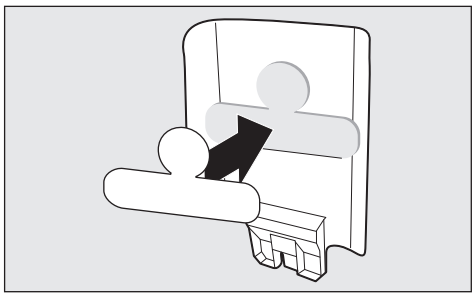

Apply Labels to Billboards

4. Remove backing from label. Align the bottom edge of the label with the raised line on the billboard. Place label and smooth upward within the recessed area on billboard.

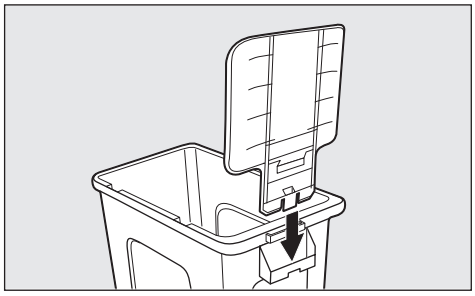

Connect Billboards to Bases

5. Insert the tab on bottom of billboard into base handle until it clicks into place.

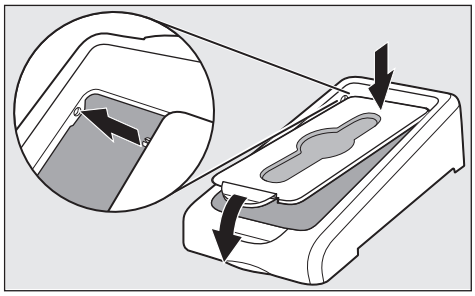

Connect Lid Insert to Lids

6. Place lid insert on lid, ensuring the pegs snap into the lid's corresponding peg holes.

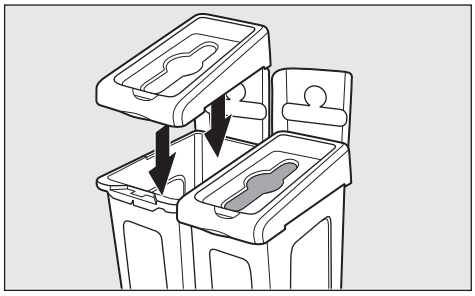

Attach Lids to Base

7. Place lids on top of the bases.

Rubbermaid Commercial Products LLC
8900 Northpointe Executive Park Drive
Huntersville, NC 28078
Phone: 1-800-347-9800
www.rubbermaidcommercial.com
#2030658

Public Square® Receptacles

3030 Recycling Bins for Break Room Area 1 of each size, different colors

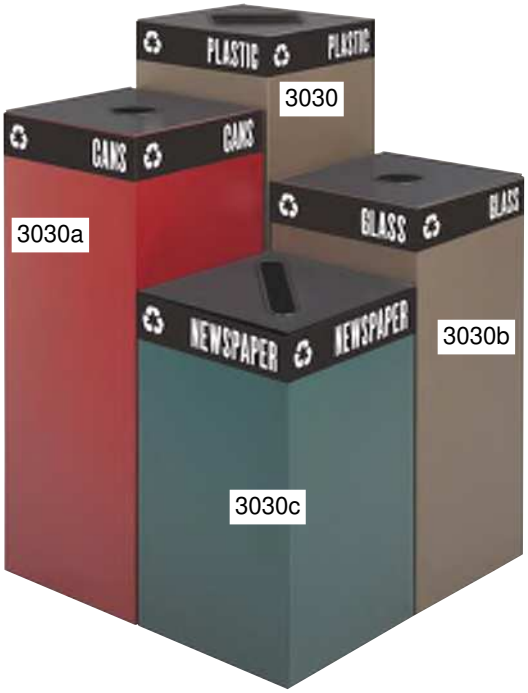



BASES

- heavy-gauge steel bases
- powder coat finish
- securing wires hold plastic bag (bags not included)
- base and tops ordered separately
- base available in Black (BL), Green (GN), Brown (BR) & Burgundy (BG)

TOPS

- hinged tops
- slot lid: newspaper and paper
- round lid: cans and glass
- square lid: plastic and waste
- decals included, slot lid includes decals for waste and recycling

GREENGUARD
PRODUCT CERTIFIED FOR LOW CHEMICAL EMISSIONS
UL.COM/GG
UL 2818

Model	Description	Color	W x D x H	Ship Weight	Price Each
2981BL	Base, 25 Gallon	Black	15¼ x 15¼ x 26"	23 lbs.	$235.00
2981GN	Base, 25 Gallon	Green	15¼ x 15¼ x 26"	23 lbs.	235.00
2982BL	Base, 31 Gallon	Black	15¼ x 15¼ x 32"	27 lbs.	261.00
2982BR	Base, 31 Gallon	Brown	15¼ x 15¼ x 32"	27 lbs.	261.00
2983BL	Base, 37 Gallon	Black	15¼ x 15¼ x 38"	32 lbs.	287.00
2983BG	Base, 37 Gallon	Burgundy	15¼ x 15¼ x 38"	32 lbs.	287.00
2984BL	Base, 42 Gallon	Black	15¼ x 15¼ x 44"	36 lbs.	312.00
2984BR	Base, 42 Gallon	Brown	15¼ x 15¼ x 44"	36 lbs.	312.00
2987BL	Lid Slot (Newspaper and Paper Decals)	Black	2 x 15" Slot	5 lbs.	97.00
2988BL	Lid Round (Cans and Glass Decals)	Black	4" Dia. Opening	5 lbs.	97.00
2989BL	Lid Square (Plastic and Waste Decals)	Black	8" Square Opening	5 lbs.	97.00

Discount Code B

Safco Products Company
9300 West Research Center Road | Minneapolis, MN 55428
telephone: 888.971.6225 | fax: 763.971.1525
©2015 Safco Products Company. All rights reserved. safcoproducts.com

OFFICE HAPPINESS™

Rubbermaid®
Commercial Products

SlimJim®

FITS IN THE TIGHTEST SPACES









SLIM PROFILE
Fits in tightest spaces

QUIET AND CONTROLLED LID-CLOSURE
Minimizes noise

INTERNAL HINGE
Protects wall

FM APPROVED OSHA OBRA

SLIM JIM® Resin Containers

			BEIGE	WHITE	RED	YELLOW	GREEN	BLUE	GRAY	BLACK
15L /4G	FRONT STEP	RCP #	1883455	1883554	1883563	1883572	1883581	1883590	1883599	1883608
		CUSTOMER #								
30L/8G	FRONT STEP	RCP #	1883456	1883555	1883564	1883573	1883582	1883591	1883600	1883609
		CUSTOMER #								
	END STEP	RCP #	1883457	1883556	1883565	1883574	1883583	1883592	1883601	1883610
		CUSTOMER #								
50L/13G	FRONT STEP	RCP #	1883458	1883557	1883566	1883575	1883584	1883593	1883602	1883611
		CUSTOMER #								
	END STEP	RCP #	1883459	1883558	1883567	1883576	1883585	1883594	1883603	1883612
		CUSTOMER #								
68L/18G	FRONT STEP	RCP #	1883460	1883559	1883568	1883577	1883586	1883595	1883604	1883613
		CUSTOMER #								
	END STEP	RCP #	1883551	1883560	1883569	1883578	1883587	1883596	1883605	1883614
		CUSTOMER #								
90L/24G	FRONT STEP	RCP #	1883552	1883561	1883570	1883579	1883588	1883597	1883606	1883615
		CUSTOMER #								
	END STEP	RCP #	1883553	1883562	1883571	1883580	1883589	1883598	1883607	1883616
		CUSTOMER #								



15L/4G



30L/8G



50L/13G



68L/18G



90L/24G

SLIM JIM® Stainless Steel Containers

			BLACK	RED	WHITE
15L /4G	FRONT STEP	RCP #	1901982	1901983	1901984
		CUSTOMER #			
30L/8G	FRONT STEP	RCP #	1901985	1901988	1901990
		CUSTOMER #			
	END STEP	RCP #	1901986	1901989	1901991
		CUSTOMER #			
	FRONT STEP DUAL LINER	RCP #	1901987		
		CUSTOMER #			
50L/13G	FRONT STEP	RCP #	1901992	1901995	1901997
		CUSTOMER #			
	END STEP	RCP #	1901993	1901996	1901998
		CUSTOMER #			
	FRONT STEP DUAL LINER	RCP #	1901994		
		CUSTOMER #			
90L/24G	FRONT STEP	RCP #	1901999	1902002	1902004
		CUSTOMER #			
	END STEP	RCP #	1902000	1902003	1902005
		CUSTOMER #			
	FRONT STEP DUAL LINER	RCP #	1902001		
		CUSTOMER #			



15L/4G



30L/8G



50L/13G



90L/24G

RCP-374 | #141662
©2014 Rubbermaid Commercial Products LLC
8900 Northpointe Executive Drive, Huntersville, NC 28078

To see our complete range of refuse solutions visit our online catalog at **rubbermaidcommercial.com**

Rubbermaid® Commercial Products

3039a

WASTE BASKET 28 QT FOR UNDER DESK AREAS



RUBBERMAID FG254300BLA SPECS	
Length	14 1/2 Inches
Width	10 1/2 Inches
Height	15 5/16 Inches
Capacity	28 qt.
Color	Black
Features	Fire Resistant UL Listed
Material	Resin
Shape	Rectangle
Type	Trash Cans

SOURCE: https://www.webstaurantstore.com/rubbermaid-fg254300bla-28-qt-black-rectangular-fire-resistant-medical-wastebasket/690FG2543BK.html

Step-On Containers

New Step-On Containers are the smart choice for large capacity, hands-free waste collection. Attractive design is suitable for front and back of house applications.

- Stainless steel provides a clean, modern appearance
- Available in 23-gallon and 30-gallon capacities for improved productivity
- Slow-closing lid with integrated damper reduces noise
- Extra-large foot pedal is easy to operate while carrying large loads
- Assists in complying with OSHA regulation 29 CFR 1910.1030 "Occupational Exposure to Bloodborne Pathogens"
- Metal bag straps keep can liners securely in place

More Step-Ons pg. 128

FM APPROVED 6921 OSHA





QUIET, SLOW-CLOSE LID
Integrated lid damper reduces excessive noise and helps keep odors and bacteria from escaping.



CAN LINER RETAINING STRAPS
Metal retaining straps keep can liners securely in place and out of sight during use.



QUIET CASTERS
Rubbermaid's red Quiet Casters assure smooth, quiet operation.



EXTRA-LARGE FOOT PEDAL
Large foot pedal provides hands-free, hygienic disposal.



FG630000 (Bag shown not available for purchase)

No.	Color	Description	U.S. Dimensions	U.S. Capacity	U.S. Ship Wt/Ctn	Metric Dimensions	Metric Capacity	Metric Ship Wt/Ctn	Pack
FG614687	**RED, BLA**	23 Gallon Stainless Steel Step-On Container	22.25" l x 20.38" w x 27.5" h	23 gal	18.8 lb	56.5 cm x 51.8 cm x 69.9 cm	87.1 L	8.5 kg	1
FG614700	**RED, LPLAT**	30 Gallon Step-On Container	24.25" l x 19.75" w x 34.25" h	30 gal	18.8 lb	61.6 cm x 50.2 cm x 87 cm	113.6 L	8.5 kg	1
FG614787	**RED, BLA**	30 Gallon Stainless Steel Step-On Container	22.75" l x 20.38" w x 34.25" h	30 gal	21.8 lb	57.8 cm x 51.8 cm x 87 cm	113.6 L	9.9 kg	1
FG630000	**BLA**	Premium Linen Hamper (uses 30 Gallon Can Liner)	22.25" l x 20.38" w x 37.88" h	N/A	14.8 lb	56.5 cm x 51.8 cm x 96.2 cm	N/A	6.7 kg	1
FG635000	**BLA**	Premium Linen Hamper Bag	19.88" l x 13.38" w x 29.25" h	30 gal	2.8 lb	50.5 cm x 34 cm x 74.3 cm	113.6 L	1.3 kg	1

Step-On Containers

Provides sanitary waste management.

- Tight-fitting, overlapping lid helps contain odors
- Tough, puncture-resistant, all-plastic construction won't rust or chip
- Quiet, heavy-duty pedal for hands-free sanitary use
- Assists in complying with OSHA regulation 29 CFR 1910.1030 "Occupational Exposure to Bloodborne Pathogens"
- Optional rigid liners for FG614300, FG614400, FG614500, and FG614600 provide a leak-proof base

Rigid Liners pg. 134

FM APPROVED 6921 OSHA



No.	Color	Description	U.S. Dimensions	U.S. Capacity	U.S. Ship Wt/Ctn	Metric Dimensions	Metric Capacity	Metric Ship Wt/Ctn	Can Liners	Pack
FG614200	**WHT, YEL**	Step-On Can with Rigid Liner	13.25" dia x 15.38" h	4.5 gal	9.1 lb	33.7 cm dia x 39.1 cm	17 L	4.1 kg	5002-88[A]	1
FG614300	**WHT, RED, BEIG, YEL**	Step-On Container	16.25" l x 15.75" w x 17.13" h	8 gal	7.9 lb	41.3 cm x 40 cm x 43.5 cm	30.3 L	3.6 kg	5004-88[A]	1
FG614400	**WHT, RED, BEIG, YEL**	Step-On Container	16.25" l x 15.75" w x 23.63" h	12 gal	10.0 lb	41.3 cm x 40 cm x 60 cm	45.4 L	4.5 kg	5004-88[A]	1
FG614500	**WHT, RED, BEIG, YEL**	Step-On Container	19.75" l x 16.13" w x 26.5" h	18 gal	13.0 lb	50.2 cm x 41 cm x 67.3 cm	68.1 L	5.9 kg	5009-88[A]	1
FG614600	**WHT, RED, BEIG, YEL**	Mobile Step-On Container	19.75" l x 16.13" w x 32.5" h	23 gal	18.0 lb	50.2 cm x 41 cm x 82.6 cm	87.1 L	8.2 kg	5009-88[A]	1

[A] Not for sale in California.

WHEN ORDERING PRODUCTS WITH BOLD COLOR CODES, PLEASE SPECIFY COLOR CODE AFTER THE PRODUCT NUMBER.
SEE PAGE 271 FOR THE PRODUCT COLOR GUIDE.

Metal-based products with this symbol meet or exceed EPA guidelines for Post-Consumer Recycled Content.

Rubbermaid®
Commercial Products

Slim Jim®

HEALTHCARE

FITS IN THE TIGHTEST SPACES

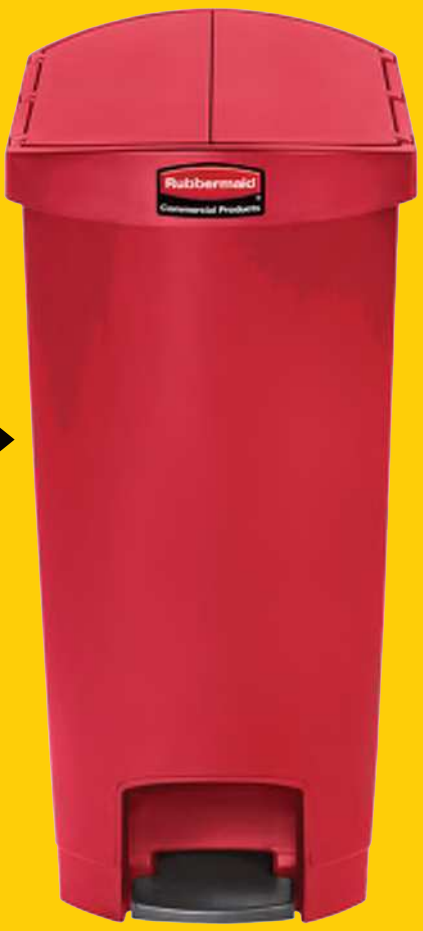



COMMERCIAL-GRADE PEDAL TESTED TO 300,000 CYCLES*

Ensures long life



INTERNAL HINGE

Protects walls



QUIET AND CONTROLLED LID CLOSURE

Minimizes noise

FM APPROVED

OSHA OBRA

*Based on internal testing of 50L containers

RECOMMENDED PRODUCT BY APPLICATION

	SIZE	PATIENT ROOM	NURSES' STATION	HALLWAY	RECEPTION AREA	EXAM ROOM	DOCTOR'S OFFICE	PUBLIC BATHROOM	KITCHEN
Slim Jim® Step-On Resin	15L/4G					●	●		
	30L/8G	●			●	●	●		
	50L/13G	●	●	●	●			●	
	68L/18G	●	●	●	●			●	●
	90L/23G								●
Slim Jim® Step-On Stainless Steel	15L/4G					●	●		
	30L/8G	●			●	●	●		
	50L/13G	●	●	●	●			●	
	90L/23G							●	

*For MRI room applications, contact your sales representative for our all-plastic step-on containers.

CHOOSE THE RIGHT STYLE BASED ON SPACE CONSTRAINTS



Front Step



End Step

CHOOSE THE RIGHT COLOUR BASED ON YOUR COLOUR-CODING NEEDS

COLOURS AVAILABLE FOR RESIN:

COLOURS AVAILABLE FOR STAINLESS STEEL:





THE DEFENDERS®

Step-on containers constructed of fire-safe galvanized steel for CSFM and UL certifications.

CSFM

RCP-364
#141524
©2015 Rubbermaid Commercial Products LLC
8900 Northpointe Executive Drive, Huntersville, NC 28078

To see our complete range of refuse solutions visit our online catalog at **rubbermaidcommercial.com**

Rubbermaid® Commercial Products

Rubbermaid®
Commercial Products

SlimJim®

FITS IN THE TIGHTEST SPACES









SLIM PROFILE
Fits in tightest spaces

QUIET AND CONTROLLED LID-CLOSURE
Minimizes noise

INTERNAL HINGE
Protects wall

FM APPROVED OSHA OBRA

SLIM JIM® Resin Containers

			BEIGE	WHITE	RED	YELLOW	GREEN	BLUE	GRAY	BLACK
15L /4G	FRONT STEP	RCP #	1883455	1883554	1883563	1883572	1883581	1883590	1883599	1883608
		CUSTOMER #								
30L/8G	FRONT STEP	RCP #	1883456	1883555	1883564	1883573	1883582	1883591	1883600	1883609
		CUSTOMER #								
	END STEP	RCP #	1883457	1883556	1883565	1883574	1883583	1883592	1883601	1883610
		CUSTOMER #								
50L/13G	FRONT STEP	RCP #	1883458	1883557	1883566	1883575	1883584	1883593	1883602	1883611
		CUSTOMER #								
	END STEP	RCP #	1883459	1883558	1883567	1883576	1883585	1883594	1883603	1883612
		CUSTOMER #								
68L/18G	FRONT STEP	RCP #	1883460	1883559	1883568	1883577	1883586	1883595	1883604	1883613
		CUSTOMER #								
	END STEP	RCP #	1883551	1883560	1883569	1883578	1883587	1883596	1883605	1883614
		CUSTOMER #								
90L/24G	FRONT STEP	RCP #	1883552	1883561	1883570	1883579	1883588	1883597	1883606	1883615
		CUSTOMER #								
	END STEP	RCP #	1883553	1883562	1883571	1883580	1883589	1883598	1883607	1883616
		CUSTOMER #								



15L/4G



30L/8G



50L/13G



68L/18G



90L/24G

SLIM JIM® Stainless Steel Containers

			BLACK	RED	WHITE
15L /4G	FRONT STEP	RCP #	1901982	1901983	1901984
		CUSTOMER #			
30L/8G	FRONT STEP	RCP #	1901985	1901988	1901990
		CUSTOMER #			
	END STEP	RCP #	1901986	1901989	1901991
		CUSTOMER #			
	FRONT STEP DUAL LINER	RCP #	1901987		
		CUSTOMER #			
50L/13G	FRONT STEP	RCP #	1901992	1901995	1901997
		CUSTOMER #			
	END STEP	RCP #	1901993	1901996	1901998
		CUSTOMER #			
	FRONT STEP DUAL LINER	RCP #	1901994		
		CUSTOMER #			
90L/24G	FRONT STEP	RCP #	1901999	1902002	1902004
		CUSTOMER #			
	END STEP	RCP #	1902000	1902003	1902005
		CUSTOMER #			
	FRONT STEP DUAL LINER	RCP #	1902001		
		CUSTOMER #			



15L/4G



30L/8G



50L/13G



90L/24G

RCP-374 | #141662
©2014 Rubbermaid Commercial Products LLC
8900 Northpointe Executive Drive, Huntersville, NC 28078

To see our complete range of refuse solutions visit our online catalog at **rubbermaidcommercial.com**

Rubbermaid® Commercial Products

SLIM JIM® UNDER-COUNTER CONTAINERS

Slim Jim® Under-Counter Containers are a purpose-built solution for space-efficient waste disposal under the counter.

Features and Benefits:

- Large angled opening provides 2x more access under the counter than traditional slim containers*
- Integrated venting channels make removing liners 80% easier, improving productivity and reducing the risk of worker injury
- Bag cinches secure liners around the rim of the container and allow for quick, knot-free liner changes
- Rim and base handles improve grip and control while lifting and emptying full containers
- Reinforced rim maintains structural integrity to resist crushing

Colors available:

Gray, Black, Brown, Beige, Blue, Green

Material Composition:

Injection-molded with high-quality resin

Compatibility:

13-Gallon Slim Jim® Under-Counter Containers:

- Slim Jim® Stainless Steel Dollies
- Intuitive Recycling Label Kit – 2018391

23-Gallon Slim Jim® Under-Counter Containers:

- Intuitive Recycling Label Kit – 197789

*Compared to 23-Gallon Vented Slim Jim® containers

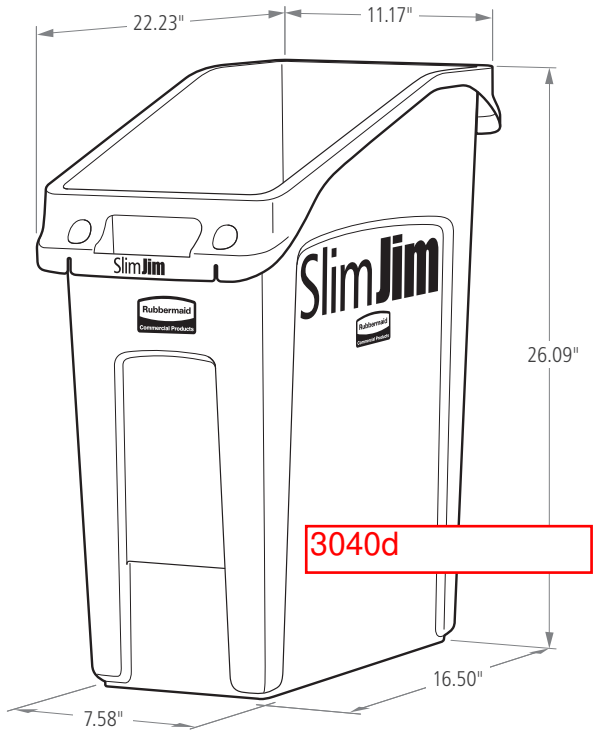

13-Gallon Slim Jim® Under-Counter Container

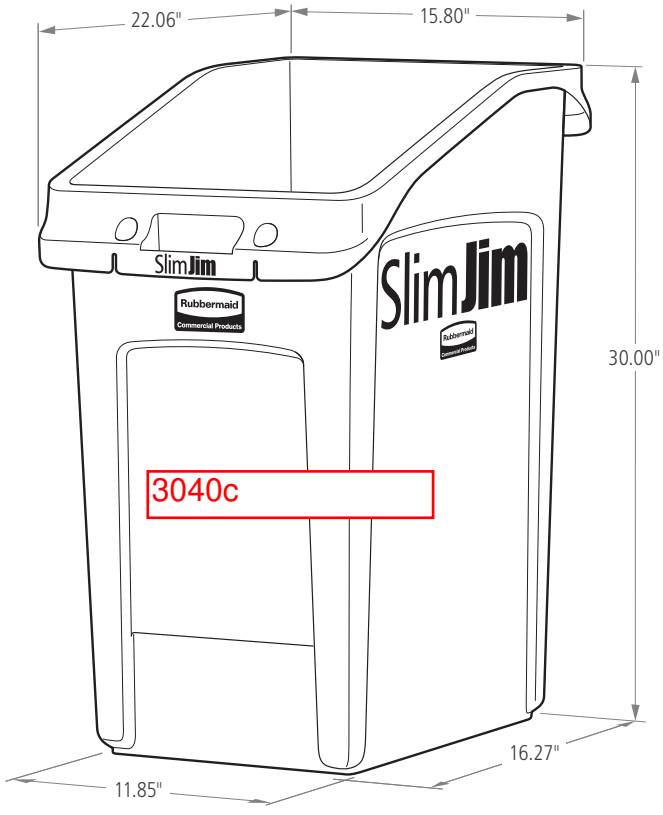

23-Gallon Slim Jim® Under-Counter Container

SLIM JIM® UNDER-COUNTER CONTAINERS

SKU #	DESCRIPTION	COLOR	CAPACITY		LENGTH		WIDTH		HEIGHT		PACK SIZE
			GAL	L	IN	MM	IN	MM	IN	MM	
2026695	SLIM JIM® UNDER-COUNTER CONTAINER	GRAY	13	49	22.23	564.59	11.17	283.69	26.09	662.76	4
2026696	SLIM JIM® UNDER-COUNTER CONTAINER	BLACK	13	49	22.23	564.59	11.17	283.69	26.09	662.76	4
2026697	SLIM JIM® UNDER-COUNTER CONTAINER	BROWN	13	49	22.23	564.59	11.17	283.69	26.09	662.76	4
2026698	SLIM JIM® UNDER-COUNTER CONTAINER	BEIGE	13	49	22.23	564.59	11.17	283.69	26.09	662.76	4
2026699	SLIM JIM® UNDER-COUNTER CONTAINER	BLUE	13	49	22.23	564.59	11.17	283.69	26.09	662.76	4
2026700	SLIM JIM® UNDER-COUNTER CONTAINER	GREEN	13	49	22.23	564.59	11.17	283.69	26.09	662.76	4
2026721	SLIM JIM® UNDER-COUNTER CONTAINER	GRAY	23	87	22.06	560.22	15.80	401.22	30.00	762.00	4
2026722	SLIM JIM® UNDER-COUNTER CONTAINER	BLACK	23	87	22.06	560.22	15.80	401.22	30.00	762.00	4
2026723	SLIM JIM® UNDER-COUNTER CONTAINER	BROWN	23	87	22.06	560.22	15.80	401.22	30.00	762.00	4
2026724	SLIM JIM® UNDER-COUNTER CONTAINER	BEIGE	23	87	22.06	560.22	15.80	401.22	30.00	762.00	4
2026725	SLIM JIM® UNDER-COUNTER CONTAINER	BLUE	23	87	22.06	560.22	15.80	401.22	30.00	762.00	4
2026726	SLIM JIM® UNDER-COUNTER CONTAINER	GREEN	23	87	22.06	560.22	15.80	401.22	30.00	762.00	4

©2018 Rubbermaid Commercial Products LLC
8900 Northpointe Executive Park Drive, Huntersville, NC 28078

Rubbermaid®
Commercial Products

SLIM JIM® UNDER-COUNTER CONTAINERS

Slim Jim® Under-Counter Containers are a purpose-built solution for space-efficient waste disposal under the counter.

Features and Benefits:

- Large angled opening provides 2x more access under the counter than traditional slim containers*
- Integrated venting channels make removing liners 80% easier, improving productivity and reducing the risk of worker injury
- Bag cinches secure liners around the rim of the container and allow for quick, knot-free liner changes
- Rim and base handles improve grip and control while lifting and emptying full containers
- Reinforced rim maintains structural integrity to resist crushing

Colors available:

Gray, Black, Brown, Beige, Blue, Green

Material Composition:

Injection-molded with high-quality resin

Compatibility:

13-Gallon Slim Jim® Under-Counter Containers:

- Slim Jim® Stainless Steel Dollies
- Intuitive Recycling Label Kit – 2018391

23-Gallon Slim Jim® Under-Counter Containers:

- Intuitive Recycling Label Kit – 197789

*Compared to 23-Gallon Vented Slim Jim® containers

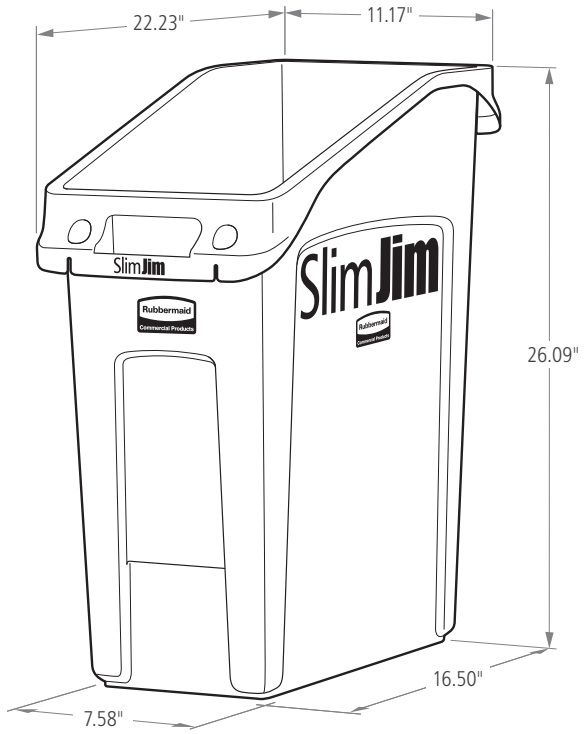

13-Gallon Slim Jim® Under-Counter Container

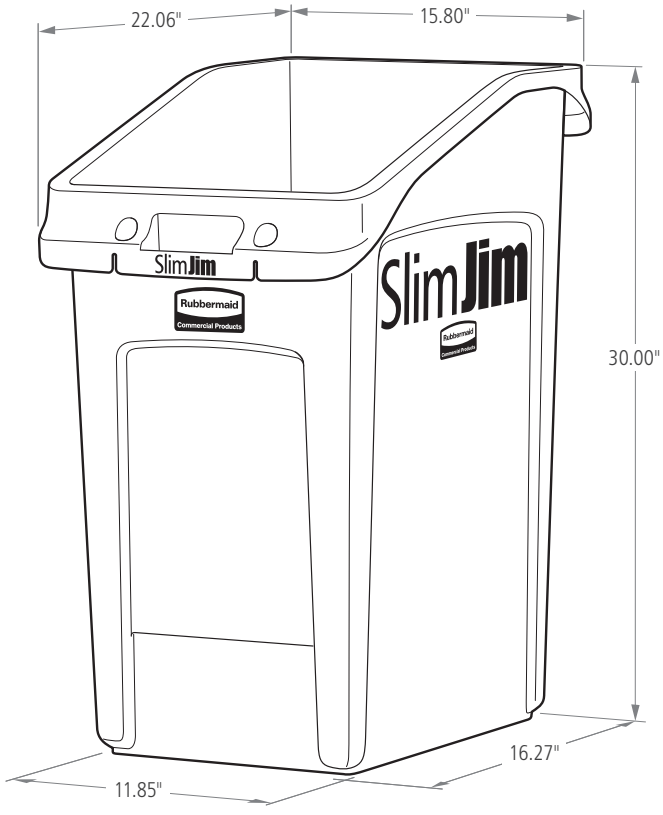

23-Gallon Slim Jim® Under-Counter Container

SLIM JIM® UNDER-COUNTER CONTAINERS

SKU #	DESCRIPTION	COLOR	CAPACITY		LENGTH		WIDTH		HEIGHT		PACK SIZE
			GAL	L	IN	MM	IN	MM	IN	MM	
2026695	SLIM JIM® UNDER-COUNTER CONTAINER	GRAY	13	49	22.23	564.59	11.17	283.69	26.09	662.76	4
2026696	SLIM JIM® UNDER-COUNTER CONTAINER	BLACK	13	49	22.23	564.59	11.17	283.69	26.09	662.76	4
2026697	SLIM JIM® UNDER-COUNTER CONTAINER	BROWN	13	49	22.23	564.59	11.17	283.69	26.09	662.76	4
2026698	SLIM JIM® UNDER-COUNTER CONTAINER	BEIGE	13	49	22.23	564.59	11.17	283.69	26.09	662.76	4
2026699	SLIM JIM® UNDER-COUNTER CONTAINER	BLUE	13	49	22.23	564.59	11.17	283.69	26.09	662.76	4
2026700	SLIM JIM® UNDER-COUNTER CONTAINER	GREEN	13	49	22.23	564.59	11.17	283.69	26.09	662.76	4
2026721	SLIM JIM® UNDER-COUNTER CONTAINER	GRAY	23	87	22.06	560.22	15.80	401.22	30.00	762.00	4
2026722	SLIM JIM® UNDER-COUNTER CONTAINER	BLACK	23	87	22.06	560.22	15.80	401.22	30.00	762.00	4
2026723	SLIM JIM® UNDER-COUNTER CONTAINER	BROWN	23	87	22.06	560.22	15.80	401.22	30.00	762.00	4
2026724	SLIM JIM® UNDER-COUNTER CONTAINER	BEIGE	23	87	22.06	560.22	15.80	401.22	30.00	762.00	4
2026725	SLIM JIM® UNDER-COUNTER CONTAINER	BLUE	23	87	22.06	560.22	15.80	401.22	30.00	762.00	4
2026726	SLIM JIM® UNDER-COUNTER CONTAINER	GREEN	23	87	22.06	560.22	15.80	401.22	30.00	762.00	4

©2018 Rubbermaid Commercial Products LLC
8900 Northpointe Executive Park Drive, Huntersville, NC 28078

Rubbermaid®
Commercial Products

3040d
25 GALLON

CLASSICS

OPEN TOP

The heavy-duty Classics decorative refuse container has a perforated steel design for a clean and modern appearance. This container is a smart choice for high-traffic areas and can be used both outdoors and indoors.

FEATURES AND BENEFITS:

FEATURES

- Heavy-gauge, fire-safe perforated steel
- Leak-proof rigid plastic liner included to contain liquids and keep the surrounding area cleaner
- Retainer bands discreetly hold liner bags in place and out of sight
- Lid is fastened to receptacle with a cable, making it easier to collect trash
- Wide center band is ideal for displaying custom logos
- Adjustable leg levelers create stability on uneven surfaces
- Shipped fully assembled

ACCESSORIES

- Anchoring kits available to secure receptacle in place

ADA COMPLIANT

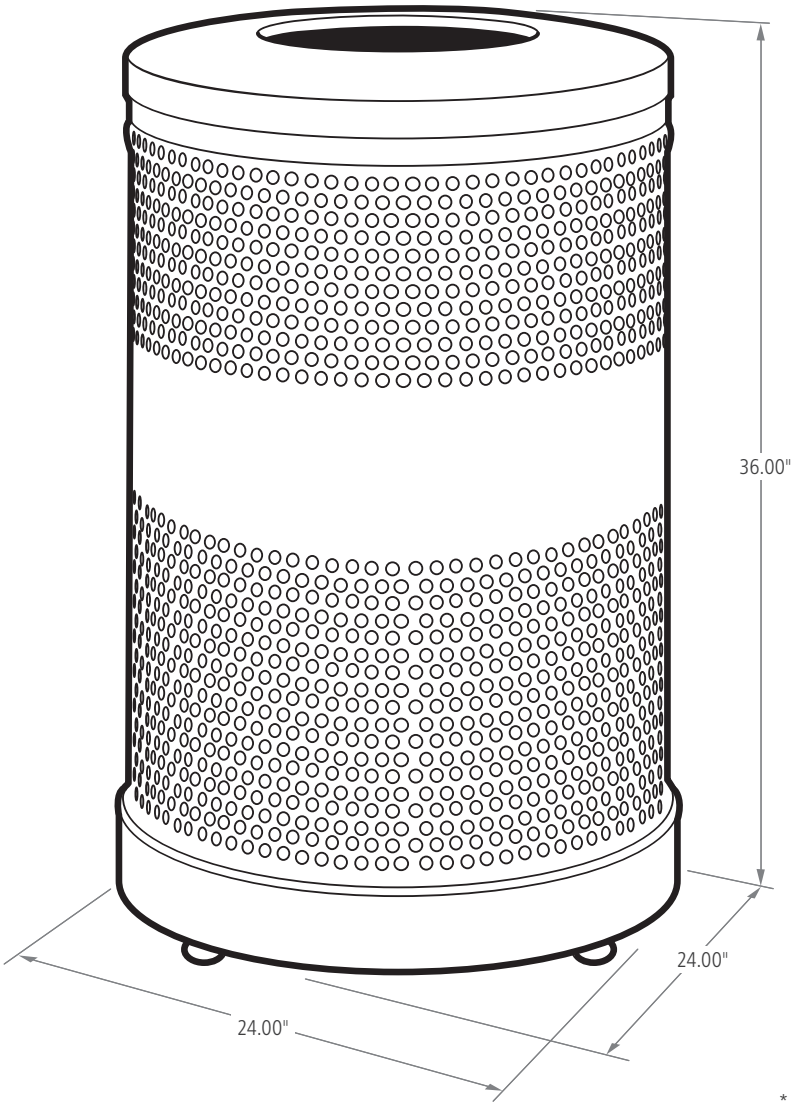

* 51G SHOWN

GALLONS	LENGTH (in.)	WIDTH (in.)	HEIGHT (in.)
25G	18.00	18.00	36.00
51G* (SHOWN)	24.00	24.00	36.00

Rubbermaid® Commercial Products

CLASSICS

OPEN TOP

STANDARD COLOR OPTIONS



SKU #	DESCRIPTION	LINERS	COLOR	GALLONS	WEIGHT (lbs.)	LENGTH (in.)	WIDTH (in.)	HEIGHT (in.)
FGS3ETBKPL	CLASSICS OPEN TOP 94L/25G	PLASTIC	BLACK GLOSS	25	46.00	18.00	18.00	36.00
FGS3ETHGRPL	CLASSICS OPEN TOP 94L/25G	PLASTIC	GREY STENNI GLOSS	25	46.00	18.00	18.00	36.00
FGS3ETSMPLBK	CLASSICS OPEN TOP 94L/25G	PLASTIC	STARDUST SILVER METALLIC WITH BLACK LID	25	46.00	18.00	18.00	36.00
FGS3ETHBZPL	CLASSICS OPEN TOP 94L/25G	PLASTIC	TEXTURED BRONZE	25	46.00	18.00	18.00	36.00
FGS3SSTBKPL	CLASSICS OPEN TOP 94L/25G	PLASTIC	STAINLESS STEEL WITH BLACK LID	25	46.00	18.00	18.00	36.00
FGS3SSTSSPL	CLASSICS OPEN TOP 94L/25G	PLASTIC	STAINLESS STEEL	25	46.00	18.00	18.00	36.00
FGS55ETBKPL	CLASSICS OPEN TOP 193L/51G	PLASTIC	BLACK GLOSS	51	70.00	24.00	24.00	36.00
FGS55ETSMPLBK	CLASSICS OPEN TOP 193L/51G	PLASTIC	STARDUST SILVER METALLIC WITH BLACK LID	51	70.00	24.00	24.00	36.00
FGS55SSTBKPL	CLASSICS OPEN TOP 193L/51G	PLASTIC	STAINLESS STEEL WITH BLACK LID	51	70.00	24.00	24.00	36.00
FGS55SSTSSPL	CLASSICS OPEN TOP 193L/51G	PLASTIC	STAINLESS STEEL	51	70.00	24.00	24.00	36.00

BUILD YOUR OWN ▶RUBBERMAIDCOMMERCIAL.COM/CUSTOMIZE

©2016 Rubbermaid Commercial Products LLC
8900 Northpointe Executive Park Drive, Huntersville, NC 28078

Rubbermaid® Commercial Products

SLIM JIM® CONTAINERS

The Slim Jim® container delivers the durability needed for commercial environments combined with brand new innovation to increase worker productivity. New product features and accessories deliver the most efficient solution for collection, transportation, and disposal of multi-stream waste and recyclables.

Features and Benefits:

- Venting channels make removing liners up to 80% easier, improving productivity and reducing the risk of worker injury
- Four bag cinches secure liners around the rim of the container and allow for quick, knot-free liner changes
- Handles at the base and rim of the container improve grip and control while lifting and emptying full containers
- Rim with rib-strengthened design increases strength and resists crushing
- Build a recycling station with a variety of dolly and lid options to meet any facility need

COLORS AVAILABLE

Blue, Green, Black, Beige, Brown, Gray, Yellow*, Red*

* 23-gallon only

Material Composition:

Injection molded with a high-quality resin blend.

Accessories:

STAINLESS STEEL DOLLIES

- Slim Jim® Single Dolly
- Slim Jim® Double Dolly
- Slim Jim® Triple Dolly
- Slim Jim® Quadruple Dolly

RESIN DOLLY

- Slim Jim® Trainable Dolly

LIDS

- Bottles and Cans Lid
- Paper Lid
- Mixed Recycling Lid
- Hinged Lid
- Swing Lid

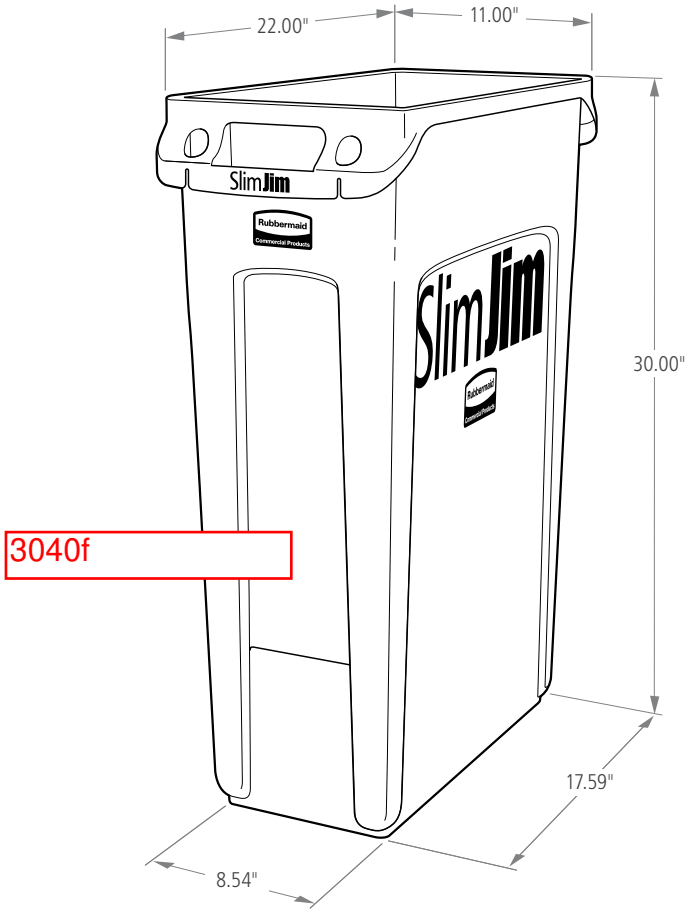

23-Gallon Slim Jim® Container

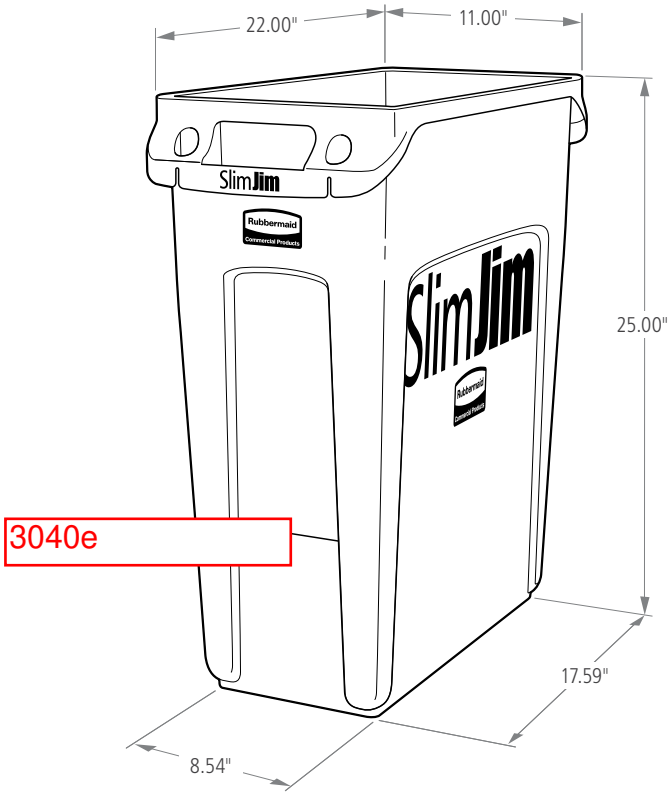

16-Gallon Slim Jim® Container

SLIM JIM® CONTAINERS

SKU #	DESCRIPTION	COLOR	CAPACITY		LENGTH		WIDTH		HEIGHT		PACK SIZE
			GAL	L	IN	CM	IN	CM	IN	CM	
1971258	SLIM JIM® CONTAINER	GRAY	16	61	22"	55.88	11"	27.94	25"	63.50	4
1955959	SLIM JIM® CONTAINER	BLACK	16	61	22"	55.88	11"	27.94	25"	63.50	4
1971259	SLIM JIM® CONTAINER	BEIGE	16	61	22"	55.88	11"	27.94	25"	63.50	4
1956181	SLIM JIM® CONTAINER	BROWN	16	61	22"	55.88	11"	27.94	25"	63.50	4
1971257	SLIM JIM® CONTAINER	BLUE	16	61	22"	55.88	11"	27.94	25"	63.50	4
1955960	SLIM JIM® CONTAINER	GREEN	16	61	22"	55.88	11"	27.94	25"	63.50	4
FG354060GRAY	SLIM JIM® CONTAINER	GRAY	23	87	22"	55.88	11"	27.94	30"	76.20	4
FG354060BLA	SLIM JIM® CONTAINER	BLACK	23	87	22"	55.88	11"	27.94	30"	76.20	4
FG354060BEIG	SLIM JIM® CONTAINER	BEIGE	23	87	22"	55.88	11"	27.94	30"	76.20	4
1956187	SLIM JIM® CONTAINER	BROWN	23	87	22"	55.88	11"	27.94	30"	76.20	4
1956185	SLIM JIM® CONTAINER	BLUE	23	87	22"	55.88	11"	27.94	30"	76.20	4
1956186	SLIM JIM® CONTAINER	GREEN	23	87	22"	55.88	11"	27.94	30"	76.20	4
1956188	SLIM JIM® CONTAINER	YELLOW	23	87	22"	55.88	11"	27.94	30"	76.20	4
1956189	SLIM JIM® CONTAINER	RED	23	87	22"	55.88	11"	27.94	30"	76.20	4
FG354007BLUE	SLIM JIM® CONTAINER	BLUE (RECYCLING)	23	87	22"	55.88	11"	27.94	30"	76.20	4
FG354007GRN	SLIM JIM® CONTAINER	GREEN (RECYCLING)	23	87	22"	55.88	11"	27.94	30"	76.20	4

©2016 Rubbermaid Commercial Products LLC
8900 Northpointe Executive Park Drive, Huntersville, NC 28078

Rubbermaid®
Commercial Products

3041

STEP ON 8 GALLON WASTE CONTAINER-RED FOR BIO HAZARD TRASH





RUBBERMAID FG614300RED SPECS	
Width	16 1/4 Inches
Depth	15 3/4 Inches
Height	17 1/8 Inches
Capacity	8 Gallons
Color	Red
Features	FM Approved
Lid Type	Hinged
Made in America	Yes
Material	Plastic
Shape	Rectangle
Type	Step-On Trash Can

SOURCE: https://www.webstaurantstore.com/rubbermaid-fg614300red-8-gallon-red-rectangular-step-on-trash-can/690FG6143RD.html

Rubbermaid®
Commercial Products

DECORATIVE REFUSE COLLECTION

DESIGNED FOR YOUR VISION



JULY 2016

QUALITY THAT SPEAKS FOR ITSELF.

VERSATILE PRODUCTS. PERSONAL EXPERIENCE.



CONFIGURE / LEARN ABOUT THE CONFIGURE FAMILY ON PAGE 22

RUBBERMAIDCOMMERCIAL.COM/CUSTOMIZE



INDOOR / OUTDOOR

CONFIGURE **22, 60**

ENHANCE **24, 63**

CLASSICS **26, 65**

INDOOR

SILHOUETTES **28, 66**

METALLIC SERIES **30, 67**

ATRIUM **32, 68**

HALF ROUNDS **34, 68**

CROWNE **36, 69**

WASTEMASTER **38, 69**

ROUND-TOPS **40, 70**

DEFENDERS **42, 71**

COLLECT-A-CUBES **44, 72**

OUTDOOR

ASPEN **46, 74**

DIMENSION **48, 75**

REGENT **50, 75**

ARCHITEK **52, 76**

TOWNE **54, 76**

AVENUE **56, 76**

DESIGNED TO STAND THE TEST OF TIME.

TIMELESS DESIGNS, LASTING QUALITY.

MADE TO LAST IN ANY CONDITION.

SPECIALIZED DESIGNS THAT RESIST THE ELEMENTS.



ALL CONTAINERS
ARE SHIPPED
FULLY ASSEMBLED

BUILT FOR THE COMMERCIAL ENVIRONMENT.

EASY ACCESS FRONT DOORS
Doors allow for quicker, more ergonomic emptying of waste.

LINERS WITH VENTING CHANNELS
Plastic liners with venting channels enable easy lifting of liner bags to speed up waste removal.

INTEGRATED LINER CINCHES
Cinches allow easy one-step liner bag retention and eliminate knot tying to make waste collection more efficient.

CONFIGURE / LEARN ABOUT THE CONFIGURE FAMILY ON PAGE 22

OPTIMIZE YOUR FACILITY. CUSTOMIZE YOUR SPACE.

UNIQUE NEVER FIT SO WELL.

FUNCTION IN BEAUTIFUL FORM.

APPEALING DESIGNS, HIGH-QUALITY MATERIAL, NO COMPROMISES.



250+ COLORS, MATERIALS, AND PATTERNS. 100+ DESIGNS, STYLES, AND SHAPES. 1 PERFECT FOR YOU.

COLORS
Over 230 color options ranging from classic to edgy.
If you can't find what you're looking for, utilize our color matching.

MATERIALS
We use quality materials like stainless steel, powder coated steel, galvanized steel, and stone – ensuring receptacles are built to last.

FINISHES
Match the receptacle to your facility's image with a wide selection of finishes that range from classic matte to trendy gloss.

RUBBERMAIDCOMMERCIAL.COM/CUSTOMIZE

ENGINEERED TO STAND OUT. DESIGNED TO FIT IN.

EXPERIENCE THE EASE OF SUPERIOR RECYCLING.

CONFIGURE / LEARN ABOUT THE CONFIGURE FAMILY ON PAGE 22

TAILORED FOR YOUR ENVIRONMENT AND VISION.

CRAFTED TO CUSTOMIZE YOUR FACILITY.

DIMENSION / LEARN ABOUT THE DIMENSION FAMILY ON PAGE 44



ARCHITEK / LEARN ABOUT THE ARCHITEK FAMILY ON PAGE 52

SUSTAINABLE. COMPLIANT. CERTIFIED.

OBRA · U.S. GREEN BUILDING COUNCIL MEMBER · FM APPROVED · OSHA · ADA COMPLIANT · UL LISTED · CLASSIFIED UL · CSFM

CONFIGURE™

The Configure™ decorative refuse containers provide a customizable recycling solution with sleek, smooth surfaces and contoured edges. This recycling system has a modern appearance that will fit seamlessly into any indoor or outdoor commercial environment.



FEATURES

ADA COMPLIANT

- **Magnetic connection** keeps the containers arranged in the order that best fits the space – in a row or an island
- Easy access front door and handle allow for **ergonomic emptying of waste**
- Internal door hinge prevents unsightly wall damage and helps maintain a neat, **clean appearance in commercial spaces**

CONFIGURE™ (see page 60 for full SKU listings)

An adaptable recycling system that can be tailored to fit any desired look and environment. Choose from single-stock SKUs, pre-configured multi-stream system or customize your own. Start customizing today by selecting from the following options:

SIZES



15 GALLON | 33 GALLON



23 GALLON | 45 GALLON

LID OPTIONS



PAPER | MIXED RECYCLING



BOTTLES / CANS | OPEN TOP

WASTE STREAM LABELS



DESIGNER'S CHOICE (Custom colors available online. Build your own at rubbermaidcommercial.com/customize)

GREY STENNI GLOSS | JET BLACK GLOSS | STAINLESS STEEL | UMBRA GREY METALLIC | LIGHT BLUE GLOSS | GREEN BLUE GLOSS | BLUE GREEN GLOSS | RED ORANGE GLOSS | WINE RED GLOSS | TRAFFIC YELLOW GLOSS | RED GLOSS | BRIGHT RED ORANGE GLOSS | MAY GREEN GLOSS | SIGNAL BLUE GLOSS



MULTI-STREAM



MULTI-STREAM WITH RAIN HOOD



MULTI-STREAM WITH SIGNAGE

ENHANCE™

The Enhance™ collection provides premium waste receptacles that complement the décor of any upscale property. The contrasting frame and panels offer a modern appearance that creates visual versatility. These containers are easily customizable with 230+ color, material and finish options. The eight different capacities and three shape offerings provide a seamless fit throughout an entire facility.



FEATURES

ADA COMPLIANT

- **Easily change panels** to refresh the look of the receptacle without buying an entirely new receptacle
- **Fingerprint-resistant coating** ensures a high-quality appearance
- A powder-coat finish and **resilient design stands up to daily use**, indoors or outdoors

ENHANCE™ (see page 63 for full SKU listings)

Premium waste receptacles that complement the décor of any upscale property.

STYLES



ROUND | HALF ROUND | PILL

LID OPTIONS



OPEN TOP | RECYCLING TOP | RECYCLING TOP WITH RAIN HOOD

ASH/TRASH | RAIN HOOD | RAIN HOOD WITH SMOKING

SIZES



7G PILL | 7.5G HALF ROUND | 11.5G HALF ROUND | 13G PILL | 15G ROUND | 23G ROUND | 33G ROUND | 46G PILL

DESIGNER'S CHOICE (Custom colors available online. Build your own at rubbermaidcommercial.com/customize)

230+ COLORS AVAILABLE
On-trend panel and frame options can blend in, or stand out with a pop of contrast.

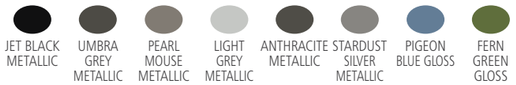

JET BLACK METALLIC | UMBRA GREY METALLIC | PEARL MOUSE METALLIC | LIGHT GREY METALLIC | ANTHRACITE METALLIC | STARDUST SILVER METALLIC | PIGEON BLUE GLOSS | FERN GREEN GLOSS

SPECIALTY FINISHES
Laminate finishes blend into any environment.



WHITE DI-NOC | WALNUT DI-NOC | MOCHA DI-NOC | GRANITE DI-NOC | EBONY DI-NOC

PERFORATED PATTERNS
Subtle patterns that look great and complement your space.



PLUS PERF | CIRCLE PERF | OVAL PERF



Rubbermaid Commercial Products

CLASSICS

The heavy-duty Classics decorative refuse container has a perforated steel design for a clean and modern appearance. This container is a smart choice for high traffic areas and can be used both outdoors and indoors.

FEATURES

ADA COMPLIANT

- Retainer bands discreetly **hold liner bags in place and out of sight**
- Lid is fastened to receptacle with a cable, making it **easier to collect waste**
- Optional waste stream identification and lid shape openings available for **easier recycling compliance**

CLASSICS (see page 65 for full SKU listings)

STYLES	SIZES	LID OPTIONS	ACCESSORIES
OPEN TOP	25G, 51G	OPEN TOP	ANCHORING KITS, WASTE STREAM LABELS, RECESSED BASE
OPEN TOP WITH RAIN HOOD	51G	OPEN TOP	
RECYCLING TOP	25G	OPEN TOP, BOTTLES/CANS, PAPER	

DESIGNER'S CHOICE (Custom colors available online. Build your own at rubbermaidcommercial.com/customize)

TEXTURED BRONZE | GREY STENNI GLOSS | MAY GREEN GLOSS | SIGNAL BLUE GLOSS | STAINLESS STEEL | STARDUST SILVER METALLIC | TEXTURED BLACK | UMBRA GREY METALLIC



OPEN TOP



OPEN TOP WITH RAIN HOOD



RECYCLING TOP



SILHOUETTES

The sleek Silhouettes decorative refuse container has a contemporary graphic pattern designed to seamlessly and beautifully blend with indoor modern environments.

FEATURES

ADA COMPLIANT

- Retainer bands discreetly **hold liner bags in place and out of sight**
- Optional waste stream identification and lid shape openings available for **easier recycling compliance**

SILHOUETTES (see page 66 for full SKU listings)

STYLES	SIZES	LID OPTIONS	ACCESSORIES
SQUARE OPEN TOP	6G, 10G, 16G, 20G, 24G, 29G, 40G, 50G	OPEN TOP	WASTE STREAM LABELS
SQUARE RECYCLING TOP	29G	OPEN TOP, BOTTLES/CANS, PAPER	
ROUND OPEN TOP	26G	OPEN TOP	
ROUND RECYCLING TOP	26G	OPEN TOP, BOTTLES/CANS, PAPER	
RECTANGLE OPEN TOP	13G, 22.5G, 25G, 40G	OPEN TOP	
SAND URN	N/A	N/A	

DESIGNER'S CHOICE (Custom colors available online. Build your own at rubbermaidcommercial.com/customize)

DESERT PEARL METALLIC | STARDUST SILVER METALLIC | STAINLESS STEEL | TEXTURED BLACK


SQUARE OPEN TOP

SQUARE RECYCLING TOP


ROUND OPEN TOP


ROUND RECYCLING TOP

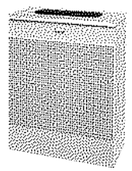
RECTANGLE OPEN TOP


SAND URN



METALLIC SERIES

The Metallic Series decorative refuse container has a sleek design that blends nicely with upscale interiors. A protective vinyl trim is applied on the disposal opening to help withstand the rigors of everyday use.

FEATURES

ADA COMPLIANT · FM APPROVED · CSFM · UL LISTED · CLASSIFIED UL

- Bottom rim designed to **protect floors**
- Flat top style has a large opening for **easy waste disposal**
- Wastebasket style designed to **fit easily in tight spaces**

METALLIC SERIES (see page 67 for full SKU listings)

STYLE	SIZES	LID OPTIONS	ACCESSORIES
ASH/TRASH	12G, 15G	–	–
ASH/TRASH SLENDER	3.5G		
OPEN TOP	15G		
FLAT TOP	12G, 15G		
WASTEBASKET	5G		
SAND URN	N/A		

DESIGNER'S CHOICE (Custom colors available online. Build your own at rubbermaidcommercial.com/customize)

ANTHRACITE METALLIC · ALMOND GLOSS · BLACK GLOSS · TEXTURED BROWN BRASS · CRIMSON GLOSS · GREEN GLOSS · MIRROR CHROME · SATIN BRASS · STARDUST SILVER METALLIC · SATIN STAINLESS STEEL · UMBRA GREY METALLIC



ASH/TRASH

ASH/TRASH SLENDER



OPEN TOP

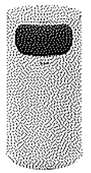

FLAT TOP



WASTEBASKET



SAND URN



ATRIUM®

Durable and corrosion-resistant, the Atrium® decorative refuse indoor container has a clean, classic look. Exterior surfaces are highly polished for a smooth and blemish-free appearance.



FEATURES

ADA COMPLIANT

- Designed to **conceal and securely hold liner bags**
- Flip top **lid stays closed** when not in use, keeping trash out of sight

ATRIUM® (see page 68 for full SKU listings)

STYLES	SIZES	LID OPTIONS	ACCESSORIES
FLIP TOP	15G	–	–
OPEN TOP	21G, 35G, 55G, 62G		

DESIGNER'S CHOICE (Custom colors available online. Build your own at rubbermaidcommercial.com/customize)

TEXTURED BLACK · JET BLACK GLOSS · LIGHT GREY METALLIC · MOUSE GREY GLOSS · SATIN ALUMINUM · SATIN BRASS



FLIP TOP



OPEN TOP



HALF ROUNDS

The Half Rounds series decorative refuse container fits flush against walls to conserve space. The sleek and functional design of this receptacle blends seamlessly with upscale and modern indoor facilities.

FEATURES

ADA COMPLIANT

- Bottom rim is **designed to protect floors**

HALF ROUNDS (see page 68 for full SKU listings)

STYLE	SIZES	LID OPTIONS	ACCESSORIES
FLAT TOP	9G	–	–
ASH/TRASH	9G		
OPEN TOP	12G		

DESIGNER'S CHOICE (Custom colors available online. Build your own at rubbermaidcommercial.com/customize)

ANTHRACITE METALLIC · ALMOND GLOSS · TEXTURED BLACK · TEXTURED BROWN BRASS · CRIMSON GLOSS · PINE GREEN GLOSS · MIRROR CHROME · SATIN BRASS · STARDUST SILVER METALLIC · STAINLESS STEEL · UMBRA GREY METALLIC

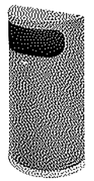

FLAT TOP



ASH/TRASH



OPEN TOP



CROWNE

The Crowne decorative refuse indoor container has an attractive contemporary design with a curved open top that prevents objects from being placed on top of the can, keeping a neater overall appearance.



FEATURES

ADA COMPLIANT

- Base of receptacle is designed to **protect floors**
- Containers have a large opening for **easy waste disposal**

CROWNE (see page 69 for full SKU listings)

STYLE	SIZES	LID OPTIONS	ACCESSORIES
OPEN TOP	15G, 30G	–	–

DESIGNER'S CHOICE (Custom colors available online. Build your own at rubbermaidcommercial.com/customize)

BLACK GLOSS · TEXTURED BLACK · TEXTURED BROWN BRASS · SATIN ALUMINUM · SATIN BRASS · STARDUST SILVER METALLIC · TEXTURED GREY · UMBRA GREY METALLIC



OPEN TOP



Rubbermaid Commercial Products

WASTEMASTER

The WasteMaster decorative refuse indoor container has two lid options. The swing top option has a lid that opens with a touch then automatically closes to conceal trash. The open top option encourages easy, drop-in waste disposal.

FEATURES

ADA COMPLIANT · UL LISTED · OSHA

- **Durable non-magnetic** stainless steel
- Legs feature nylon-based pads to **protect floor**
- Retainer bands **discreetly hold liner bags in place and out of sight**

WASTEMASTER (see page 69 for full SKU listings)

STYLE	SIZES	LID OPTIONS	ACCESSORIES
SWING TOP	10.5G, 14G, 16G, 24G, 29G, 40G	–	ANCHORING KITS, LOCK & KEY
OPEN TOP	10.5G, 14G, 16G, 24G, 29G, 40G		

DESIGNER'S CHOICE (Custom colors available online. Build your own at rubbermaidcommercial.com/customize)

LIGHT GREY METALLIC · SKY WHITE GLOSS · STAINLESS STEEL · UMBRA GREY METALLIC

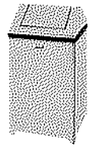

SWING TOP



OPEN TOP



ROUND-TOPS

The Round-Tops decorative refuse container has a sleek design that beautifully blends into any indoor environment. These containers feature a bottom rim that is designed to protect flooring.

FEATURES

ADA COMPLIANT · FM APPROVED · CSFM · UL LISTED · OSHA

- Hand grips for **easy lift-off emptying**
- The push door style features a self-closing door to help **control odors**
- The step-on style features a foot pedal allowing for **hands-free operation**

ROUND-TOPS (see page 70 for full SKU listings)

STYLE	SIZES	LID OPTIONS	ACCESSORIES
PUSH DOOR	12G,15G, 21G	–	–
OPEN TOP	15G		
DOME TOP	15G		
STEP-ON PUSH DOOR	15G		

DESIGNER'S CHOICE (Custom colors available online. Build your own at rubbermaidcommercial.com/customize)

ANTHRACITE METALLIC · BLACK GLOSS · COBALT BLUE GLOSS · CRIMSON GLOSS · ALMOND GLOSS · GREY STENNI GLOSS · MIRROR CHROME · RED GLOSS · SATIN BRASS · STARDUST SILVER METALLIC · PINE GREEN GLOSS · SKY WHITE GLOSS

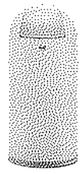

PUSH DOOR

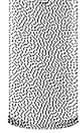

OPEN TOP

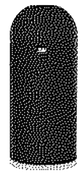

DOME TOP

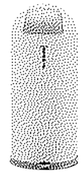

STEP-ON PUSH DOOR



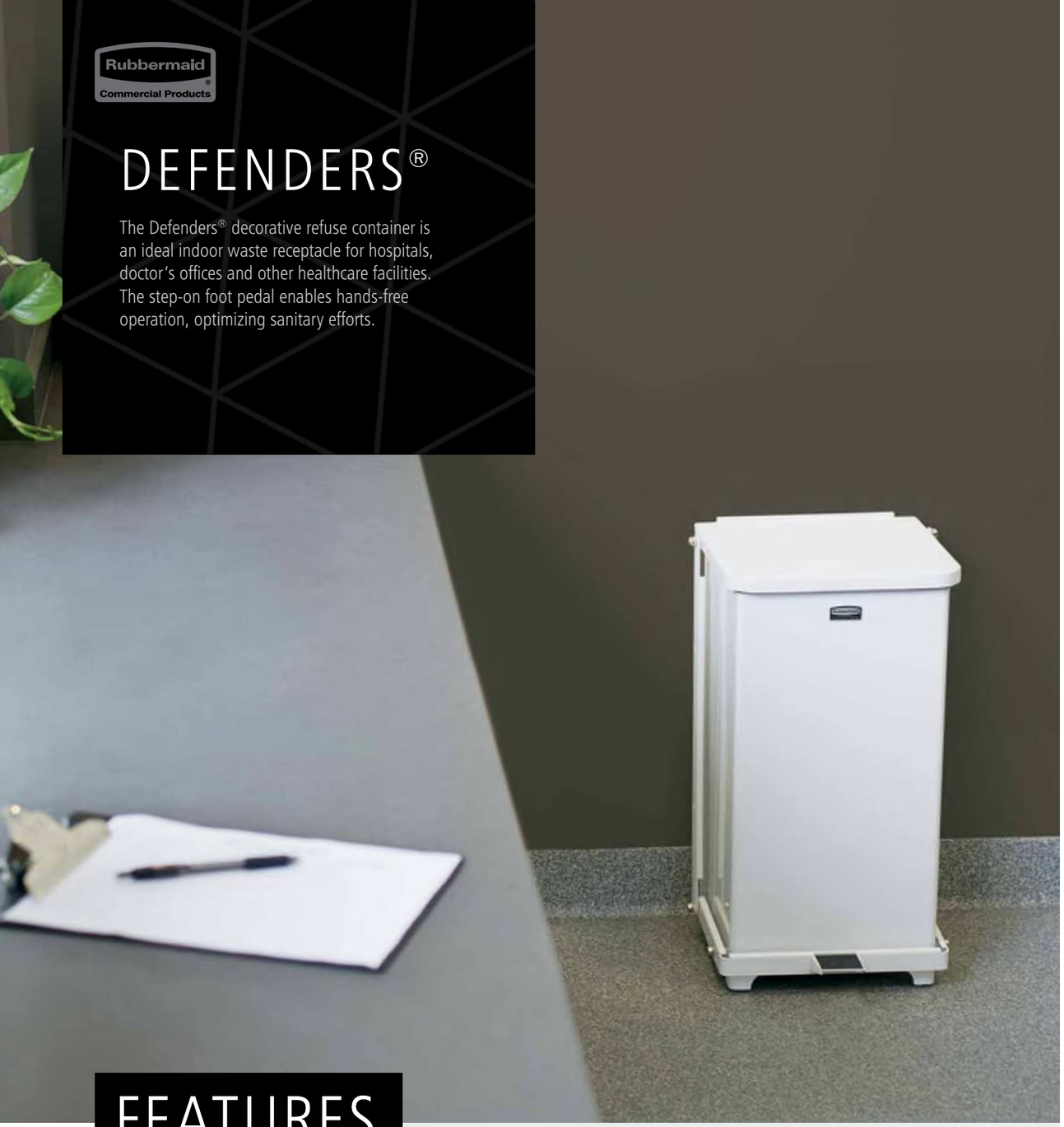

DEFENDERS®

The Defenders® decorative refuse container is an ideal indoor waste receptacle for hospitals, doctor's offices and other healthcare facilities. The step-on foot pedal enables hands-free operation, optimizing sanitary efforts.

FEATURES

FM APPROVED CSFM UL LISTED OSHA

DEFENDERS® (see page 70 for full SKU listings)

STYLE	SIZES	LID OPTIONS	ACCESSORIES
ROUND	3.5G, 5G	–	MEDICAL WASTE LABELS, DAMPENER
SQUARE	4G, 6.5G, 7G, 12G, 13G, 24G, 25G, 40G		
SQUARE W/ WHEELS	40G		

DESIGNER'S CHOICE (Custom colors available online. Build your own at rubbermaidcommercial.com/customize)

DESERT PEARL METALLIC · JET BLACK GLOSS · RED GLOSS · STAINLESS STEEL · SKY WHITE GLOSS



ROUND



SQUARE



SQUARE WITH WHEELS



COLLECT-A-CUBES™

The Collect-A-Cubes™ decorative refuse indoor container's clean and simple appearance improves recycling compliance. Simply select the lid type and decal to meet the needs of your facility.

FEATURES

ADA COMPLIANT

- Can be used **individually, side-by-side, or grouped**
- Protective vinyl trim on all disposal openings stands up to **heavy use**
- Optional waste stream identification and lid shape openings available for **easier recycling compliance**

COLLECT-A-CUBES™ (see page 72 for full SKU listings)

STYLES	SIZES	LID OPTIONS	ACCESSORIES
OPEN TOP	22.5G, 28.5G, 34.5G	OPEN TOP	LOCK & KEY, WASTE STREAM LABELS
RECYCLING TOP	22.5G, 28.5G, 34.5G	OPEN TOP, BOTTLE/CANS, PAPER	

DESIGNER'S CHOICE (Custom colors available online. Build your own at rubbermaidcommercial.com/customize)

BEIGE GLOSS · TEXTURED BLACK · MATTE BRONZE · GREY STENNI GLOSS · MAY GREEN GLOSS · SIGNAL BLUE GLOSS · STARDUST SILVER METALLIC



OPEN TOP



RECYCLING TOP



AVAILABLE STREAM LABELS



ASPEN

The Aspen decorative refuse container's stone panels naturally blend this receptacle into any outdoor environment.



FEATURES

ADA COMPLIANT

- Durable powder coat finish **withstands severe weather and resists fading** even when exposed to harsh UV rays
- Hinged lid style enables **easy waste removal**
- Adjustable leg levelers **create stability** on uneven surfaces

ASPEN (see page 74 for full SKU listings)

STYLES	SIZES	LID OPTIONS	ACCESSORIES
FLAT TOP	12G	–	ANCHORING KIT, LOCK AND KEY
ASH/TRASH	12G, 24G		
ASH/TRASH W/ WEATHER SHIELD	12G, 24G		
HINGED TOP	29G, 38G, 48G		
HINGED TOP W/ WEATHER SHIELD	29G, 38G, 48G		
SAND URN	N/A		
SAND URN W/ WEATHER SHIELD	N/A		
ASH/TRASH W/ ROUND OPENING	2.5G		
ASH/TRASH W/ ROUND OPENING AND WEATHER SHIELD	2.5G		
FRONT DOOR	38G		

DESIGNER'S CHOICE (Custom colors available online. Build your own at rubbermaidcommercial.com/customize)

BROWN GLOSS | MATTE BRONZE | GREEN GLOSS | GREY STENNI GLOSS



FLAT TOP

ASH/TRASH

ASH/TRASH WITH WEATHER SHIELD



HINGED TOP



HINGED TOP WITH WEATHER SHIELD



SAND URN



SAND URN WITH WEATHER SHIELD



ASH/TRASH WITH ROUND OPENING



ASH/TRASH WITH ROUND OPENING AND WEATHER SHIELD



SIDE DOOR





DIMENSION

The Dimension decorative refuse container's solid or perforated steel panels create an upscale, dimensional look that complements contemporary outdoor environments.

FEATURES

ADA COMPLIANT

- Durable powder coat finish **withstands severe weather and resists fading** even when exposed to harsh UV rays
- Hinged lid style enables **easy waste removal**
- Adjustable leg levelers **create stability** on uneven surfaces

DIMENSION (see page 75 for full SKU listings)

STYLE	SIZES	LID OPTIONS	ACCESSORIES
FLAT TOP	12G , 24G	–	ANCHORING KIT, LOCK AND KEY
ASH/TRASH	12G		
ASH/TRASH W/ WEATHER SHIELD	12G, 24G		
HINGED TOP	29G, 38G, 48G		
HINGED TOP W/ WEATHER SHIELD	29G, 38G, 48G		
SAND URN	N/A		
SAND URN W/ WEATHER SHIELD	N/A		
ASH/TRASH W/ ROUND OPENING	2.5G		
ASH/TRASH W/ ROUND OPENING AND WEATHER SHIELD	2.5G		

DESIGNER'S CHOICE (Custom colors available online. Build your own at rubbermaidcommercial.com/customize)

ANTHRACITE METALLIC · TEXTURED BLACK · GREY STENNI GLOSS · BLACK GLOSS · STARDUST SILVER METALLIC · LIGHT GREY METALLIC



FLAT TOP

ASH/TRASH

ASH/TRASH WITH WEATHER SHIELD



HINGED TOP



HINGED TOP WITH WEATHER SHIELD



SAND URN



SAND URN WITH WEATHER SHIELD



ASH/TRASH WITH ROUND OPENING



ASH/TRASH WITH ROUND OPENING AND WEATHER SHIELD



REGENT

The Regent decorative refuse outdoor container conveys an environmentally friendly message with green trim and lumber finished slats.



FEATURES

ADA COMPLIANT

- Lumber finished slats constructed of **100% recycled plastic**
- Durable powder coat finish **withstands severe weather and resists fading** even when exposed to harsh UV rays
- Adjustable leg levelers **create stability** on uneven surfaces

REGENT (see page 75 for full SKU listings)

STYLE	SIZES	LID OPTIONS	ACCESSORIES
FLAT TOP	12G	–	ANCHORING KIT, LOCK AND KEY
ASH/TRASH	12G		
ASH/TRASH W/ WEATHER SHIELD	12G		
HINGED TOP	29G		
HINGED TOP W/ WEATHER SHIELD	29G		

DESIGNER'S CHOICE (Custom colors available online. Build your own at rubbermaidcommercial.com/customize)

BLACK BROWN GLOSS | BLACK OLIVE GLOSS | GREEN GLOSS



FLAT TOP

ASH/TRASH



ASH/TRASH WITH WEATHER SHIELD



HINGED TOP



HINGED TOP WITH WEATHER SHIELD



ARCHITEK®

With its clean, contoured lines and multi-dimensional design, the Architek® decorative refuse container is an ideal fit for contemporary and upscale outdoor environments.



FEATURES

ADA COMPLIANT

- Durable powder coat finish **withstands severe weather and resists fading** even when exposed to harsh UV rays
- Adjustable leg levelers **create stability** on uneven surfaces

ARCHITEK® (see page 76 for full SKU listings)

STYLE	SIZES	LID OPTIONS	ACCESSORIES
FLAT TOP	17G	–	ANCHORING KITS
FLAT TOP W/ SAND URN	5G, 17G		
CANOPY TOP	38G		
CANOPY TOP W/ SAND URN	38G		
OPEN TOP	38G		
SAND URN	N/A		

DESIGNER'S CHOICE (Custom colors available online. Build your own at rubbermaidcommercial.com/customize)

MATTE BRONZE | ANTHRACITE METALLIC | BLACK GLOSS | DESERT PEARL METALLIC | LIGHT GREY METALLIC | JET BLACK GLOSS



FLAT TOP

FLAT TOP WITH SAND URN



CANOPY TOP



CANOPY TOP WITH SAND URN



OPEN TOP



SAND URN



TOWNE

The Towne decorative refuse outdoor container has two styles. The lumber finished slat style has a natural look that blends with any outdoor environment The perforated style has a contemporary look that matches any outdoor environment.

FEATURES

ADA COMPLIANT

- Retainer bands **discreetly hold liner bags** in place
- Bottom drain holes help **prevent water accumulation**
- Lumber finished slats style constructed of **100% recycled plastic**

TOWNE (see page 76 for full SKU listings)

STYLE	SIZES	LID OPTIONS	ACCESSORIES
IN GROUND POST W/ LUMBER FINISHED SLATS	34G, 63G	DOME TOPS, FUNNEL TOPS	SURFACE MOUNT POLE, MOUNTING BRACKET KIT, IN GROUND POLE
SURFACE POST W/ LUMBER FINISHED SLATS	10G, 34G, 63G		
PERFORATED METAL ON POLE	10G, 22G		
PERFORATED METAL ON WALL BRACKET	10G, 22G		
PERFORATED METAL	10G, 22G, 34G, 63G		
PERFORATED METAL W/ LUMBER FINISHED SLATS	34G, 63G		

LID OPTIONS AND ACCESSORIES, PAGE 67



DESIGNER'S CHOICE (Custom colors available online. Build your own at rubbermaidcommercial.com/customize)

BLACK GLOSS | BLACK BROWN GLOSS | CEDAR | GREEN GLOSS

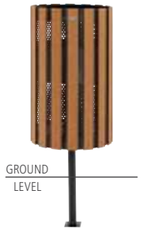

IN GROUND POST WITH LUMBER FINISHED SLATS



SURFACE POST WITH LUMBER FINISHED SLATS



PERFORATED METAL ON POLE



PERFORATED METAL ON WALL BRACKET

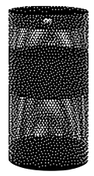

PERFORATED METAL



PERFORATED METAL WITH LUMBER FINISHED SLATS



AVENUE

The Avenue decorative refuse container is designed for outdoor high-traffic areas and harsh weather conditions. It adds an attractive element to your facility with its sophisticated vertical rail design.



FEATURES

ADA COMPLIANT

- Durable powder coat finish **withstands severe weather and resists fading** even when exposed to harsh UV rays
- Lid is fastened to receptacle for **added security**
- Adjustable leg levelers **create stability** on uneven surfaces

AVENUE (see page 76 for full SKU listings)

STYLE	SIZES	LID OPTIONS	ACCESSORIES
RECTANGLE OPEN TOP W/ HINGED LID	35G	–	–
SQUARE OPEN TOP W/ HINGED LID	16G		
ROUND OPEN TOP	32G		
ROUND OPEN TOP WITH PERFORATION	23G, 37G		

DESIGNER'S CHOICE (Custom colors available online. Build your own at rubbermaidcommercial.com/customize)

ANTHRACITE METALLIC | MATTE BRONZE | JET BLACK GLOSS



RECTANGLE OPEN TOP WITH HINGED LID

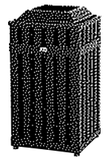

SQUARE OPEN TOP WITH HINGED LID

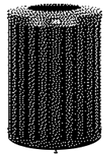

ROUND OPEN TOP

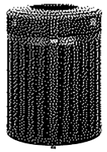

ROUND OPEN TOP WITH PERFORATION

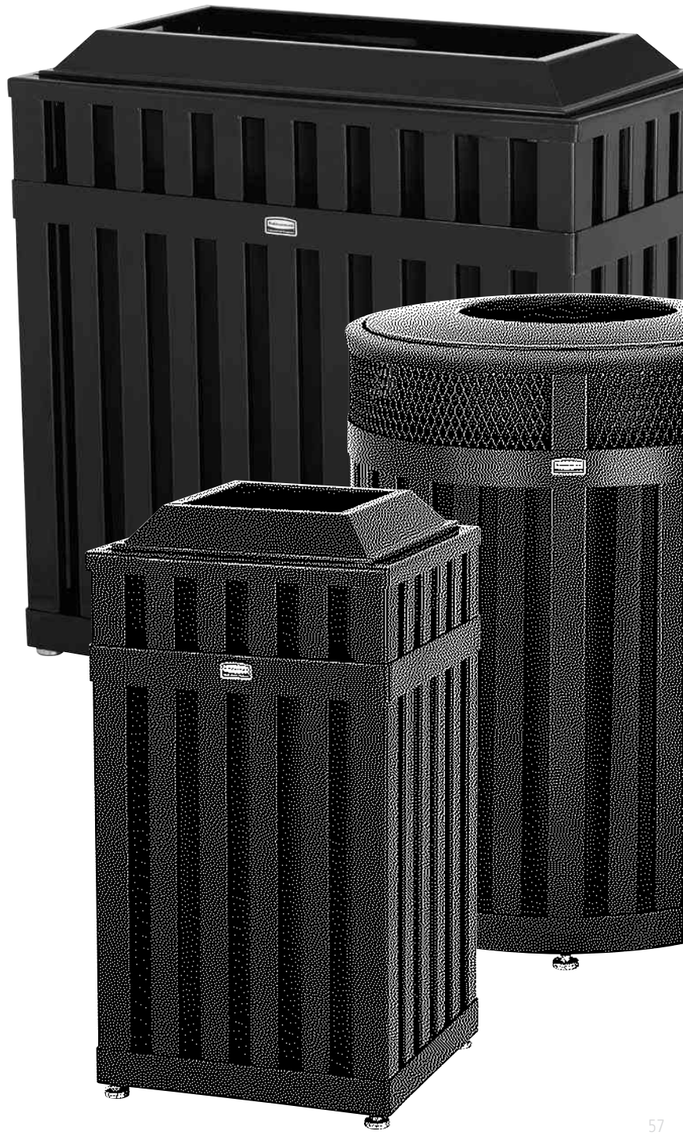



INDEX

FIND EXACTLY WHAT YOU'RE LOOKING FOR.

Rubbermaid®
Commercial Products

CONFIGURE™

GREY STENNI GLOSS | STAINLESS STEEL | TEXTURED BLACK

SKU #	DESCRIPTION	FRONT COLOR	SIDE COLOR	GALLONS	LENGTH (IN.)	WIDTH (IN.)	HEIGHT (IN.)
SINGLE STREAM							
1961614	1 STREAM LANDFILL 15G	GREY STENNI GLOSS	TEXTURED BLACK	15	14.78	19.50	37.97
1961615	1 STREAM MIXED RECYCLING 15G	GREY STENNI GLOSS	TEXTURED BLACK	15	14.78	19.50	37.97
1961616	1 STREAM PAPER 15G	GREY STENNI GLOSS	TEXTURED BLACK	15	14.78	19.50	37.97
1961617	1 STREAM PLASTIC 15G	GREY STENNI GLOSS	TEXTURED BLACK	15	14.78	19.50	37.97
1961618	1 STREAM GLASS 15G	GREY STENNI GLOSS	TEXTURED BLACK	15	14.78	19.50	37.97
1961619	1 STREAM CANS 15G	GREY STENNI GLOSS	TEXTURED BLACK	15	14.78	19.50	37.97
1961620	1 STREAM ORGANIC WASTE 15G	GREY STENNI GLOSS	TEXTURED BLACK	15	14.78	19.50	37.97
1961621	1 STREAM LANDFILL 23G	GREY STENNI GLOSS	TEXTURED BLACK	23	19.59	19.50	37.97
1961622	1 STREAM MIXED RECYCLING 23G	GREY STENNI GLOSS	TEXTURED BLACK	23	19.59	19.50	37.97
1961623	1 STREAM PAPER 23G	GREY STENNI GLOSS	TEXTURED BLACK	23	19.59	19.50	37.97
1961624	1 STREAM PLASTIC 23G	GREY STENNI GLOSS	TEXTURED BLACK	23	19.59	19.50	37.97
1961625	1 STREAM GLASS 23G	GREY STENNI GLOSS	TEXTURED BLACK	23	19.59	19.50	37.97
1961626	1 STREAM CANS 23G	GREY STENNI GLOSS	TEXTURED BLACK	23	19.59	19.50	37.97
1961627	1 STREAM ORGANIC WASTE 23G	GREY STENNI GLOSS	TEXTURED BLACK	23	19.59	19.50	37.97
1961628	1 STREAM LANDFILL 33G	GREY STENNI GLOSS	TEXTURED BLACK	33	24.05	19.50	37.97
1961629	1 STREAM MIXED RECYCLING 33G	GREY STENNI GLOSS	TEXTURED BLACK	33	24.05	19.50	37.97
1961630	1 STREAM PAPER 33G	GREY STENNI GLOSS	TEXTURED BLACK	33	24.05	19.50	37.97
1961641	1 STREAM PLASTIC 33G	GREY STENNI GLOSS	TEXTURED BLACK	33	24.05	19.50	37.97
1961642	1 STREAM GLASS 33G	GREY STENNI GLOSS	TEXTURED BLACK	33	24.05	19.50	37.97
1961505	1 STREAM CANS 33G	GREY STENNI GLOSS	TEXTURED BLACK	33	24.05	19.50	37.97
1961506	1 STREAM ORGANIC WASTE 33G	GREY STENNI GLOSS	TEXTURED BLACK	33	24.05	19.50	37.97
1961507	1 STREAM LANDFILL 45G	GREY STENNI GLOSS	TEXTURED BLACK	45	29.13	19.50	37.97
1961508	1 STREAM MIXED RECYCLING 45G	GREY STENNI GLOSS	TEXTURED BLACK	45	29.13	19.50	37.97
1961509	1 STREAM PAPER 45G	GREY STENNI GLOSS	TEXTURED BLACK	45	29.13	19.50	37.97
1961510	1 STREAM PLASTIC 45G	GREY STENNI GLOSS	TEXTURED BLACK	45	29.13	19.50	37.97
1961681	1 STREAM GLASS 45G	GREY STENNI GLOSS	TEXTURED BLACK	45	29.13	19.50	37.97
1961682	1 STREAM CANS 45G CANS	GREY STENNI GLOSS	TEXTURED BLACK	45	29.13	19.50	37.97
1961683	1 STREAM ORGANIC WASTE 45G	GREY STENNI GLOSS	TEXTURED BLACK	45	29.13	19.50	37.97
1961711	1 STREAM LANDFILL 15G	STAINLESS STEEL	STAINLESS STEEL	15	14.78	19.50	37.97
1961684	1 STREAM MIXED RECYCLING 15G	STAINLESS STEEL	STAINLESS STEEL	15	14.78	19.50	37.97
1961685	1 STREAM PAPER 15G	STAINLESS STEEL	STAINLESS STEEL	15	14.78	19.50	37.97
1961686	1 STREAM PLASTIC 15G	STAINLESS STEEL	STAINLESS STEEL	15	14.78	19.50	37.97
1961687	1 STREAM GLASS 15G	STAINLESS STEEL	STAINLESS STEEL	15	14.78	19.50	37.97
1961688	1 STREAM CANS 15G	STAINLESS STEEL	STAINLESS STEEL	15	14.78	19.50	37.97
1961689	1 STREAM ORGANIC WASTE 15G	STAINLESS STEEL	STAINLESS STEEL	15	14.78	19.50	37.97
1961690	1 STREAM LANDFILL 23G	STAINLESS STEEL	STAINLESS STEEL	23	19.59	19.50	37.97
1961691	1 STREAM MIXED RECYCLING 23G	STAINLESS STEEL	STAINLESS STEEL	23	19.59	19.50	37.97
1961692	1 STREAM PAPER 23G	STAINLESS STEEL	STAINLESS STEEL	23	19.59	19.50	37.97
1961693	1 STREAM PLASTIC 23G	STAINLESS STEEL	STAINLESS STEEL	23	19.59	19.50	37.97
1961694	1 STREAM GLASS 23G	STAINLESS STEEL	STAINLESS STEEL	23	19.59	19.50	37.97
1961695	1 STREAM CANS 23G	STAINLESS STEEL	STAINLESS STEEL	23	19.59	19.50	37.97
1961696	1 STREAM ORGANIC WASTE 23G	STAINLESS STEEL	STAINLESS STEEL	23	19.59	19.50	37.97
1961697	1 STREAM LANDFILL 33G	STAINLESS STEEL	STAINLESS STEEL	33	24.05	19.50	37.97
1961698	1 STREAM MIXED RECYCLING 33G	STAINLESS STEEL	STAINLESS STEEL	33	24.05	19.50	37.97
1961699	1 STREAM PAPER 33G	STAINLESS STEEL	STAINLESS STEEL	33	24.05	19.50	37.97
1961700	1 STREAM PLASTIC 33G	STAINLESS STEEL	STAINLESS STEEL	33	24.05	19.50	37.97
1961701	1 STREAM GLASS 33G	STAINLESS STEEL	STAINLESS STEEL	33	24.05	19.50	37.97
1961702	1 STREAM CANS 33G	STAINLESS STEEL	STAINLESS STEEL	33	24.05	19.50	37.97
1961703	1 STREAM ORGANIC WASTE 33G	STAINLESS STEEL	STAINLESS STEEL	33	24.05	19.50	37.97
1961704	1 STREAM LANDFILL 45G	STAINLESS STEEL	STAINLESS STEEL	45	29.13	19.50	37.97

CONFIGURE™ (cont)

GREY STENNI GLOSS | STAINLESS STEEL | TEXTURED BLACK

SKU #	DESCRIPTION	FRONT COLOR	SIDE COLOR	GALLONS	LENGTH (IN.)	WIDTH (IN.)	HEIGHT (IN.)
1961705	1 STREAM MIXED RECYCLING 45G	STAINLESS STEEL	STAINLESS STEEL	45	29.13	19.50	37.97
1961706	1 STREAM PAPER 45G	STAINLESS STEEL	STAINLESS STEEL	45	29.13	19.50	37.97
1961707	1 STREAM PLASTIC 45G	STAINLESS STEEL	STAINLESS STEEL	45	29.13	19.50	37.97
1961708	1 STREAM GLASS 45G	STAINLESS STEEL	STAINLESS STEEL	45	29.13	19.50	37.97
1961709	1 STREAM CANS 45G	STAINLESS STEEL	STAINLESS STEEL	45	29.13	19.50	37.97
1961710	1 STREAM ORGANIC WASTE 45G	STAINLESS STEEL	STAINLESS STEEL	45	29.13	19.50	37.97
SINGLE STREAM WITH RAIN HOOD							
1961712	1 STREAM LANDFILL 15G RAIN HOOD	GREY STENNI GLOSS	TEXTURED BLACK	15	14.91	19.62	45.86
1961713	1 STREAM MIXED RECYCLING 15G RAIN HOOD	GREY STENNI GLOSS	TEXTURED BLACK	15	14.91	19.62	45.86
1961714	1 STREAM PAPER 15G RAIN HOOD	GREY STENNI GLOSS	TEXTURED BLACK	15	14.91	19.62	45.86
1961715	1 STREAM PLASTIC 15G RAIN HOOD	GREY STENNI GLOSS	TEXTURED BLACK	15	14.91	19.62	45.86
1961716	1 STREAM GLASS 15G RAIN HOOD	GREY STENNI GLOSS	TEXTURED BLACK	15	14.91	19.62	45.86
1961717	1 STREAM CANS 15G RAIN HOOD	GREY STENNI GLOSS	TEXTURED BLACK	15	14.91	19.62	45.86
1961718	1 STREAM ORGANIC WASTE 15G RAIN HOOD	GREY STENNI GLOSS	TEXTURED BLACK	15	14.91	19.62	45.86
1961719	1 STREAM LANDFILL 23G RAIN HOOD	GREY STENNI GLOSS	TEXTURED BLACK	23	19.56	19.62	45.86
1961720	1 STREAM MIXED RECYCLING 23G RAIN HOOD	GREY STENNI GLOSS	TEXTURED BLACK	23	19.56	19.62	45.86
1961721	1 STREAM PAPER 23G RAIN HOOD	GREY STENNI GLOSS	TEXTURED BLACK	23	19.56	19.62	45.86
1961722	1 STREAM PLASTIC 23G RAIN HOOD	GREY STENNI GLOSS	TEXTURED BLACK	23	19.56	19.62	45.86
1961723	1 STREAM GLASS 23G RAIN HOOD	GREY STENNI GLOSS	TEXTURED BLACK	23	19.56	19.62	45.86
1961724	1 STREAM CANS 23G RAIN HOOD	GREY STENNI GLOSS	TEXTURED BLACK	23	19.56	19.62	45.86
1961725	1 STREAM ORGANIC WASTE 23G RAIN HOOD	GREY STENNI GLOSS	TEXTURED BLACK	23	19.56	19.62	45.86
1961726	1 STREAM LANDFILL 33G RAIN HOOD	GREY STENNI GLOSS	TEXTURED BLACK	33	24.37	19.62	45.86
1961727	1 STREAM MIXED RECYCLING 33G RAIN HOOD	GREY STENNI GLOSS	TEXTURED BLACK	33	24.37	19.62	45.86
1961728	1 STREAM PAPER 33G RAIN HOOD	GREY STENNI GLOSS	TEXTURED BLACK	33	24.37	19.62	45.86
1961729	1 STREAM PLASTIC 33G RAIN HOOD	GREY STENNI GLOSS	TEXTURED BLACK	33	24.37	19.62	45.86
1961730	1 STREAM GLASS 33G RAIN HOOD	GREY STENNI GLOSS	TEXTURED BLACK	33	24.37	19.62	45.86
1961741	1 STREAM CANS 33G RAIN HOOD	GREY STENNI GLOSS	TEXTURED BLACK	33	24.37	19.62	45.86
1961742	1 STREAM ORGANIC WASTE 33G RAIN HOOD	GREY STENNI GLOSS	TEXTURED BLACK	33	24.37	19.62	45.86
1961743	1 STREAM LANDFILL 45G RAIN HOOD	GREY STENNI GLOSS	TEXTURED BLACK	45	29.32	19.62	45.86
1961744	1 STREAM MIXED RECYCLING 45G RAIN HOOD	GREY STENNI GLOSS	TEXTURED BLACK	45	29.32	19.62	45.86
1961745	1 STREAM PAPER 45G RAIN HOOD	GREY STENNI GLOSS	TEXTURED BLACK	45	29.32	19.62	45.86
1961746	1 STREAM PLASTIC 45G RAIN HOOD	GREY STENNI GLOSS	TEXTURED BLACK	45	29.32	19.62	45.86
1961747	1 STREAM GLASS 45G RAIN HOOD	GREY STENNI GLOSS	TEXTURED BLACK	45	29.32	19.62	45.86
1961748	1 STREAM CANS 45G RAIN HOOD	GREY STENNI GLOSS	TEXTURED BLACK	45	29.32	19.62	45.86
1961749	1 STREAM ORGANIC WASTE 45G RAIN HOOD	GREY STENNI GLOSS	TEXTURED BLACK	45	29.32	19.62	45.86
MULTI-STREAM SYSTEMS							
1961750	2 STREAM LANDFILL/MIXED RECYCLING 15/23G	GREY STENNI GLOSS	TEXTURED BLACK	15/23	34.25	19.50	37.97
1961751	2 STREAM LANDFILL/MIXED RECYCLING 15/33G	GREY STENNI GLOSS	TEXTURED BLACK	15/33	38.84	19.50	37.97
1961752	2 STREAM LANDFILL/PAPER 2 15G	GREY STENNI GLOSS	TEXTURED BLACK	15/15	29.44	19.50	37.97
1961753	2 STREAM LANDFILL/PAPER 15/23G	GREY STENNI GLOSS	TEXTURED BLACK	15/23	34.25	19.50	37.97
1961754	2 STREAM LANDFILL/ORGANIC WASTE 15/23G	GREY STENNI GLOSS	TEXTURED BLACK	15/23	34.25	19.50	37.97
1961755	2 STREAM LANDFILL/MIXED RECYCLING 23/33G	GREY STENNI GLOSS	TEXTURED BLACK	23/33	39.05	19.50	37.97
1961780	2 STREAM LANDFILL/MIXED RECYCLING 15/23G	STAINLESS STEEL	STAINLESS STEEL	15/23	34.25	19.50	37.97
1961781	2 STREAM LANDFILL/MIXED RECYCLING 15/33G	STAINLESS STEEL	STAINLESS STEEL	15/33	38.84	19.50	37.97
1961782	2 STREAM LANDFILL/PAPER 2 15G	STAINLESS STEEL	STAINLESS STEEL	15/15	29.44	19.50	37.97
1961783	2 STREAM LANDFILL/PAPER 15/23G	STAINLESS STEEL	STAINLESS STEEL	15/23	34.25	19.50	37.97
1961784	2 STREAM LANDFILL/ORGANIC WASTE 15/23G	STAINLESS STEEL	STAINLESS STEEL	15/23	34.25	19.50	37.97
1961785	2 STREAM LANDFILL/MIXED RECYCLING 23/33G	STAINLESS STEEL	STAINLESS STEEL	23/33	39.05	19.50	37.97
1961756	3 STREAM LANDFILL/MIXED/ORGANIC WASTE 3 15G	GREY STENNI GLOSS	TEXTURED BLACK	15/15/15	44.10	19.50	37.97
1961757	3 STREAM PAPER/CANS/PLASTIC 3 15G	GREY STENNI GLOSS	TEXTURED BLACK	15/15/15	44.10	19.50	37.97
1961758	3 STREAM LANDFILL/PAPER/CANS 3 15G	GREY STENNI GLOSS	TEXTURED BLACK	15/15/15	44.10	19.50	37.97

CONFIGURE™ (cont)

GREY STENNI GLOSS | STAINLESS STEEL | TEXTURED BLACK

SKU #	DESCRIPTION	FRONT COLOR	SIDE COLOR	GALLONS	LENGTH (IN.)	WIDTH (IN.)	HEIGHT (IN.)
MULTI-STREAM SYSTEMS							
1961759	3 STREAM LANDFILL/PAPER/CANS 15/23/23G	GREY STENNI GLOSS	TEXTURED BLACK	15/23/23	53.71	19.50	37.97
1961786	3 STREAM LANDFILL/MIXED RECYCLING/ ORGANIC WASTE 3 15G	STAINLESS STEEL	STAINLESS STEEL	15/15/15	44.10	19.50	37.97
1961787	3 STREAM PAPER/CANS/PLASTIC 3 15G	STAINLESS STEEL	STAINLESS STEEL	15/15/15	44.10	19.50	37.97
1961788	3 STREAM LANDFILL/PAPER/CANS 3 15G	STAINLESS STEEL	STAINLESS STEEL	15/15/15	44.10	19.50	37.97
1961789	3 STREAM LANDFILL/PAPER/CANS 15/23/23G	STAINLESS STEEL	STAINLESS STEEL	15/23/23	53.71	19.50	37.97
1961774	3 STREAM LANDFILL/MIXED RECYCLING/ ORGANIC WASTE 3 15G	GREY STENNI GLOSS	TEXTURED BLACK	15/15/15	44.10	19.62	44.51
1961775	3 STREAM PAPER/CANS/PLASTIC 3 15G	GREY STENNI GLOSS	TEXTURED BLACK	15/15/15	44.10	19.62	44.51
1961776	3 STREAM LANDFILL/PAPER/CANS 3 15G	GREY STENNI GLOSS	TEXTURED BLACK	15/15/15	44.10	19.62	44.51
1961760	4 STREAM LANDFILL/PAPER/PLASTIC/CANS 4 15G	GREY STENNI GLOSS	TEXTURED BLACK	15/15/15/15	58.76	19.50	37.97
1961771	4 STREAM PAPER/PLASTIC/CANS/GLASS 4 15G	GREY STENNI GLOSS	TEXTURED BLACK	15/15/15/15	58.76	19.50	37.97
1961772	4 STREAM LANDFILL/PAPER/CANS/ORGANIC WASTE 4 15G	GREY STENNI GLOSS	TEXTURED BLACK	15/15/15/15	58.76	19.50	37.97
1961790	4 STREAM LANDFILL/PAPER/PLASTIC/CANS 4 15G	STAINLESS STEEL	STAINLESS STEEL	15/15/15/15	58.76	19.50	37.97
1961801	4 STREAM PAPER/PLASTIC/CANS/GLASS 4 15G	STAINLESS STEEL	STAINLESS STEEL	15/15/15/15	58.76	19.50	37.97
1961802	4 STREAM LANDFILL/PAPER/CANS/ORGANIC WASTE 4 15G	STAINLESS STEEL	STAINLESS STEEL	15/15/15/15	58.76	19.50	37.97
1961777	4 STREAM LANDFILL/PAPER/PLASTIC/CANS 4 15G	GREY STENNI GLOSS	TEXTURED BLACK	15/15/15/15	58.76	19.62	44.51
1961778	4 STREAM PAPER/PLASTIC/CANS/GLASS 4 15G	GREY STENNI GLOSS	TEXTURED BLACK	15/15/15/15	58.76	19.62	44.51
1961779	4 STREAM LANDFILL/PAPER/CANS/ORGANIC WASTE 4 15G	GREY STENNI GLOSS	TEXTURED BLACK	15/15/15/15	58.76	19.62	44.51
1961773	5 STREAM GLASS/PAPER/PLASTIC/CANS/ ORGANIC WASTE 5 15G	GREY STENNI GLOSS	TEXTURED BLACK	15/15/15/15/15	73.42	19.50	37.97
1963087	5 STREAM GLASS/PAPER/PLASTIC/CANS/ ORGANIC WASTE 5 15G	STAINLESS STEEL	STAINLESS STEEL	15/15/15/15/15	73.42	19.50	37.97
MULTI-STREAM SYSTEMS OUTDOOR WITH RAIN HOOD							
1961803	2 STREAM LANDFILL/MIXED RECYCLING 15/23G RAIN HOOD	GREY STENNI GLOSS	TEXTURED BLACK	15/23	34.47	19.62	45.86
1961804	2 STREAM LANDFILL/MIXED RECYCLING 15/33G RAIN HOOD	GREY STENNI GLOSS	TEXTURED BLACK	15/33	39.28	19.62	45.86
1961805	2 STREAM LANDFILL/MIXED RECYCLING 23/33G RAIN HOOD	GREY STENNI GLOSS	TEXTURED BLACK	23/33	39.28	19.62	45.86
ADDITIONAL SIGNAGE							
1961572	LANDFILL 15G SIGN	BLACK	–	15	14.03	1.78	8.49
1961573	LANDFILL 23G SIGN	BLACK	–	23	18.87	1.78	8.49
1961574	LANDFILL 33G SIGN	BLACK	–	33	23.64	1.78	8.49
1961575	LANDFILL 45G SIGN	BLACK	–	45	28.45	1.78	8.49
1961576	GLASS 15G SIGN	ORANGE	–	15	14.03	1.78	8.49
1961577	GLASS 23G SIGN	ORANGE	–	23	18.87	1.78	8.49
1961578	GLASS 33G SIGN	ORANGE	–	33	23.64	1.78	8.49
1961579	GLASS 45G SIGN	ORANGE	–	45	29.13	1.78	8.49
1961580	ORGANIC WASTE 15G SIGN	GREEN	–	15	14.03	1.78	8.49
1961581	ORGANIC WASTE 23G SIGN	GREEN	–	23	18.87	1.78	8.49
1961582	ORGANIC WASTE 33G SIGN	GREEN	–	33	23.64	1.78	8.49
1961583	ORGANIC WASTE 45G SIGN	GREEN	–	45	28.45	1.78	8.49
1961584	PLASTIC 15G SIGN	RED	–	15	14.03	1.78	8.49
1961585	PLASTIC 23G SIGN	RED	–	23	18.87	1.78	8.49
1961586	PLASTIC 33G SIGN	RED	–	33	23.64	1.78	8.49
1961587	PLASTIC 45G SIGN	RED	–	45	29.13	1.78	8.49
1961588	MIXED RECYCLING 15G SIGN	BLUE	–	15	14.03	1.78	8.49
1961589	PAPER 15G SIGN	BLUE	–	15	14.03	1.78	8.49
1961590	MIXED RECYCLING 23G SIGN	BLUE	–	23	18.87	1.78	8.49
1961591	PAPER 23G SIGN	BLUE	–	23	18.87	1.78	8.49
1961592	MIXED RECYCLING 33G SIGN	BLUE	–	33	23.64	1.78	8.49
1961593	PAPER 33G SIGN	BLUE	–	33	23.64	1.78	8.49
1961594	MIXED RECYCLING 45G SIGN	BLUE	–	45	28.45	1.78	8.49
1961595	PAPER 45G SIGN	BLUE	–	45	28.45	1.78	8.49
1961596	CANS 15G SIGN	YELLOW	–	15	14.03	1.78	8.49
1961597	CANS 23G SIGN	YELLOW	–	23	18.87	1.78	8.49
1961598	CANS 33G SIGN	YELLOW	–	33	23.64	1.78	8.49
1961599	CANS 45G SIGN	YELLOW	–	33	28.45	1.78	8.49

ENHANCE™

POWDER COATS

PEARL MOUSE GREY METALLIC | STAINLESS STEEL | STARDUST SILVER METALLIC | JET BLACK METALLIC | UMBRA GREY METALLIC | BRONZE METALLIC | DARK CHERRY METALLIC

SPECIALTY FINISHES

MOCHA | EBONY

SKU #	DESCRIPTION	COLOR	GALLONS	LENGTH (IN.)	WIDTH (IN.)	HEIGHT (IN.)
INDOOR						
1970033	PILL 7G OPEN TOP	FRAME: PEARL MOUSE GREY METALLIC; PANEL: UMBRA GREY METALLIC	7	17.13	9.63	17.05
1970034	PILL 2 STREAM 7G RECYCLING TOP LANDFILL/ MIXED RECYCLING	FRAME: PEARL MOUSE GREY METALLIC; PANEL: UMBRA GREY METALLIC	7	17.13	9.63	17.05
1970035	PILL 7G OPEN TOP	FRAME: STARDUST SILVER METALLIC; PANEL: BRUSHED STAINLESS	7	17.13	9.63	17.05
1970036	PILL 2 STREAM 7G RECYCLING TOP LANDFILL/ MIXED RECYCLING	FRAME: STARDUST SILVER METALLIC; PANEL: BRUSHED STAINLESS	7	17.13	9.63	17.05
1970037	PILL 7G OPEN TOP	FRAME: PEARL MOUSE GREY METALLIC; PANEL: MOCHA	7	17.13	9.63	17.05
1970038	PILL 2 STREAM 7G RECYCLING TOP LANDFILL/ MIXED RECYCLING	FRAME: PEARL MOUSE GREY METALLIC; PANEL: MOCHA	7	17.13	9.63	17.05
1970039	PILL 7G OPEN TOP	FRAME: JET BLACK METALLIC; PANEL: EBONY	7	17.13	9.63	17.05
1969873	PILL 2 STREAM 7G RECYCLING TOP LANDFILL/ MIXED RECYCLING	FRAME: JET BLACK METALLIC; PANEL: EBONY	7	17.13	9.63	17.05
1969874	HALF ROUND 7.5G OPEN TOP	FRAME: PEARL MOUSE GREY METALLIC; PANEL: UMBRA GREY METALLIC	7.5	18.7	10.69	31.66
1969876	HALF ROUND ASH/TRASH 7.5G	FRAME: PEARL MOUSE GREY METALLIC; PANEL: UMBRA GREY METALLIC	7.5	18.7	10.69	31.66
1969878	HALF ROUND 7.5G OPEN TOP	FRAME: STARDUST SILVER METALLIC; PANEL: BRUSHED STAINLESS	7.5	18.7	10.69	31.66
1969880	HALF ROUND ASH/TRASH 7.5G	FRAME: STARDUST SILVER METALLIC; PANEL: BRUSHED STAINLESS	7.5	18.7	10.69	31.66
1970082	HALF ROUND 7.5G OPEN TOP	FRAME: PEARL MOUSE GREY METALLIC; PANEL: MOCHA	7.5	18.7	10.69	31.66
1970084	HALF ROUND ASH/TRASH 7.5G	FRAME: PEARL MOUSE GREY METALLIC; PANEL: MOCHA	7.5	18.7	10.69	31.66
1970086	HALF ROUND 7.5G OPEN TOP	FRAME: JET BLACK METALLIC; PANEL: EBONY	7.5	18.7	10.69	31.66
1970088	HALF ROUND ASH/TRASH 7.5G	FRAME: JET BLACK METALLIC; PANEL: EBONY	7.5	18.7	10.69	31.66
1970090	HALF ROUND 11.5G OPEN TOP	FRAME: PEARL MOUSE GREY METALLIC; PANEL: UMBRA GREY METALLIC	11.5	22.2	12.41	31.65
1970112	HALF ROUND 2 STREAM 11.5G RECYCLING TOP LANDFILL/MIXED RECYCLING	FRAME: PEARL MOUSE GREY METALLIC; PANEL: UMBRA GREY METALLIC	11.5	22.2	12.43	31.65
1970113	HALF ROUND 11.5G OPEN TOP	FRAME: STARDUST SILVER METALLIC; PANEL: BRUSHED STAINLESS	11.5	22.2	12.41	31.65
1970115	HALF ROUND 2 STREAM 11.5G RECYCLING TOP LANDFILL/MIXED RECYCLING	FRAME: STARDUST SILVER METALLIC; PANEL: BRUSHED STAINLESS	11.5	22.2	12.43	31.65
1970116	HALF ROUND 11.5G OPEN TOP	FRAME: PEARL MOUSE GREY METALLIC; PANEL: MOCHA	11.5	22.2	12.41	31.65
1970118	HALF ROUND 2 STREAM 11.5G RECYCLING TOP LANDFILL/MIXED RECYCLING	FRAME: PEARL MOUSE GREY METALLIC; PANEL: MOCHA	11.5	22.2	12.43	31.65
1970119	HALF ROUND 11.5G OPEN TOP	FRAME: JET BLACK METALLIC; PANEL: EBONY	11.5	22.2	12.41	31.65
1970121	HALF ROUND 2 STREAM 11.5G RECYCLING TOP LANDFILL/MIXED RECYCLING	FRAME: JET BLACK METALLIC; PANEL: EBONY	11.5	22.2	12.43	31.65
1970122	PILL 13G OPEN TOP	FRAME: PEARL MOUSE GREY METALLIC; PANEL: UMBRA GREY METALLIC	13	21.5	11.5	31.63
1970124	PILL 13G OPEN TOP	FRAME: STARDUST SILVER METALLIC; PANEL: BRUSHED STAINLESS	13	21.5	11.5	31.63
1970126	PILL 13G OPEN TOP	FRAME: PEARL MOUSE GREY METALLIC; PANEL: MOCHA	13	21.5	11.5	31.63
1970128	PILL 13G OPEN TOP	FRAME: JET BLACK METALLIC; PANEL: EBONY	13	21.5	11.5	31.63
1970130	ROUND 15G OPEN TOP	FRAME: PEARL MOUSE GREY METALLIC; PANEL: UMBRA GREY METALLIC	15	19.52	19.52	31.89
1970152	ROUND ASH/TRASH 15G	FRAME: PEARL MOUSE GREY METALLIC; PANEL: UMBRA GREY METALLIC	15	19.57	19.57	31.92
1970154	ROUND 15G OPEN TOP	FRAME: STARDUST SILVER METALLIC; PANEL: BRUSHED STAINLESS	15	19.52	19.52	31.89
1970156	ROUND ASH/TRASH 15G	FRAME: STARDUST SILVER METALLIC; PANEL: BRUSHED STAINLESS	15	19.57	19.57	31.92
1970158	ROUND 15G OPEN TOP	FRAME: PEARL MOUSE GREY METALLIC; PANEL: MOCHA	15	19.52	19.52	31.89
1970160	ROUND ASH/TRASH 15G	FRAME: PEARL MOUSE GREY METALLIC; PANEL: MOCHA	15	19.57	19.57	31.92
1970162	ROUND 15G OPEN TOP	FRAME: JET BLACK METALLIC; PANEL: EBONY	15	19.52	19.52	31.89
1970164	ROUND ASH/TRASH 15G	FRAME: JET BLACK METALLIC; PANEL: EBONY	15	19.57	19.57	31.92
1970166	ROUND 23G OPEN TOP	FRAME: PEARL MOUSE GREY METALLIC; PANEL: UMBRA GREY METALLIC	23	21.56	21.56	31.89
1970168	ROUND 2 STREAM 23G RECYCLING TOP LANDFILL/MIXED RECYCLING	FRAME: PEARL MOUSE GREY METALLIC; PANEL: UMBRA GREY METALLIC	23	21.56	21.56	31.82
1970169	ROUND 23G OPEN TOP	FRAME: STARDUST SILVER METALLIC; PANEL: BRUSHED STAINLESS	23	21.56	21.56	31.89

ENHANCE™ (cont)

POWDER COATS

PEARL MOUSE GREY METALLIC | STAINLESS STEEL | STARDUST SILVER METALLIC | JET BLACK METALLIC | UMBRA GREY METALLIC | BRONZE METALLIC | DARK CHERRY METALLIC

SPECIALTY FINISHES

MOCHA | EBONY

SKU #	DESCRIPTION	COLOR	GALLONS	LENGTH (IN.)	WIDTH (IN.)	HEIGHT (IN.)
INDOOR						
1970171	ROUND 2 STREAM 23G RECYCLING TOP LANDFILL/MIXED RECYCLING	FRAME: STARDUST SILVER METALLIC; PANEL: BRUSHED STAINLESS	23	21.56	21.56	31.82
1970172	ROUND 23G OPEN TOP	FRAME: PEARL MOUSE GREY METALLIC; PANEL: MOCHA	23	21.56	21.56	31.89
1970174	ROUND 2 STREAM 23G RECYCLING TOP LANDFILL/MIXED RECYCLING	FRAME: PEARL MOUSE GREY METALLIC; PANEL: MOCHA	23	21.56	21.56	31.82
1970175	ROUND 23G OPEN TOP	FRAME: JET BLACK METALLIC; PANEL: EBONY	23	21.56	21.56	31.89
1970177	ROUND 2 STREAM 23G RECYCLING TOP LANDFILL/MIXED RECYCLING	FRAME: JET BLACK METALLIC; PANEL: EBONY	23	21.56	21.56	31.82
1970178	ROUND 33G OPEN TOP	FRAME: PEARL MOUSE GREY METALLIC; PANEL: UMBRA GREY METALLIC	33	21.56	21.56	38.58
1970180	ROUND 2 STREAM 33G RECYCLING TOP LANDFILL/MIXED RECYCLING	FRAME: PEARL MOUSE GREY METALLIC; PANEL: UMBRA GREY METALLIC	33	21.56	21.56	38.61
1970191	ROUND 33G OPEN TOP	FRAME: STARDUST SILVER METALLIC; PANEL: BRUSHED STAINLESS	33	21.56	21.56	38.58
1970193	ROUND 2 STREAM 33G RECYCLING TOP LANDFILL/MIXED RECYCLING	FRAME: STARDUST SILVER METALLIC; PANEL: BRUSHED STAINLESS	33	21.56	21.56	38.61
1970194	ROUND 33G OPEN TOP	FRAME: PEARL MOUSE GREY METALLIC; PANEL: MOCHA	33	21.56	21.56	38.58
1970196	ROUND 2 STREAM 33G RECYCLING TOP LANDFILL/MIXED RECYCLING	FRAME: PEARL MOUSE GREY METALLIC; PANEL: MOCHA	33	21.56	21.56	38.61
1970197	ROUND 33G OPEN TOP	FRAME: JET BLACK METALLIC; PANEL: EBONY	33	21.56	21.56	38.58
1970199	PILL 2 STREAM 33G RECYCLING TOP LANDFILL/ MIXED RECYCLING	FRAME: JET BLACK METALLIC; PANEL: EBONY	33	21.56	21.56	38.61
1970200	PILL 2x23G OPEN TOP	FRAME: PEARL MOUSE GREY METALLIC; PANEL: UMBRA GREY METALLIC	46	41.78	21.64	31.72
1970202	PILL 2x23G OPEN TOP	FRAME: STARDUST SILVER METALLIC; PANEL: ANTHRACITE METALLIC	46	41.78	21.64	31.72
1970204	PILL 2x23G OPEN TOP	FRAME: PEARL MOUSE GREY METALLIC; PANEL: MOCHA	46	41.78	21.64	31.72
1970207	PILL 2x23G OPEN TOP	FRAME: JET BLACK METALLIC; PANEL: EBONY	46	41.78	21.64	31.72
OUTDOOR						
1970209	ROUND 15G RAIN HOOD	FRAME: PEARL MOUSE GREY METALLIC; PANEL: UMBRA GREY METALLIC	15	19.62	19.62	39.64
1970210	ROUND 15G RAIN HOOD WITH SMOKING	FRAME: PEARL MOUSE GREY METALLIC; PANEL: UMBRA GREY METALLIC	15	19.62	19.62	42.7
1970214	ROUND 15G RAIN HOOD	FRAME: STARDUST SILVER METALLIC; PANEL: ANTHRACITE METALLIC	15	19.62	19.62	39.64
1970215	ROUND 15G RAIN HOOD WITH SMOKING	FRAME: STARDUST SILVER METALLIC; PANEL: ANTHRACITE METALLIC	15	19.62	19.62	42.7
1970220	ROUND 15G RAIN HOOD	FRAME: BRONZE METALLIC; PANEL: DARK CHERRY METALLIC	15	19.62	19.62	39.64
1970221	ROUND 15G RAIN HOOD WITH SMOKING	FRAME: BRONZE METALLIC; PANEL: DARK CHERRY METALLIC	15	19.62	19.62	42.7
1970226	ROUND 15G RAIN HOOD	FRAME: JET BLACK METALLIC; PANEL: JET B LACK METALLIC	15	19.62	19.62	39.64
1970227	ROUND 15G RAIN HOOD WITH SMOKING	FRAME: JET BLACK METALLIC; PANEL: JET BLACK METALLIC	15	19.62	19.62	42.7
1970242	ROUND 23G RAIN HOOD	FRAME: PEARL MOUSE GREY METALLIC; PANEL: UMBRA GREY METALLIC	23	21.56	21.56	40.48
1970243	ROUND 23G RAIN HOOD WITH SMOKING	FRAME: PEARL MOUSE GREY METALLIC; PANEL: UMBRA GREY METALLIC	23	21.56	21.56	43.5
1970244	ROUND 2 STREAM 23G RECYCLING TOP LANDFILL/MIXED RECYCLING	FRAME: PEARL MOUSE GREY METALLIC; PANEL: UMBRA GREY METALLIC	23	21.56	21.56	31.82
1970248	ROUND 23G RAIN HOOD	FRAME: STARDUST SILVER METALLIC; PANEL: ANTHRACITE METALLIC	23	21.56	21.56	40.48
1970249	ROUND 23G RAIN HOOD WITH SMOKING	FRAME: STARDUST SILVER METALLIC; PANEL: ANTHRACITE METALLIC	23	21.56	21.56	43.5
1970250	ROUND 2 STREAM 23G RECYCLING TOP LANDFILL/MIXED RECYCLING	FRAME: STARDUST SILVER METALLIC; PANEL: ANTHRACITE METALLIC	23	21.56	21.56	31.82
1970254	ROUND 23G RAIN HOOD	FRAME: BRONZE METALLIC; PANEL: DARK CHERRY METALLIC	23	21.56	21.56	40.48
1970255	ROUND 23G RAIN HOOD WITH SMOKING	FRAME: BRONZE METALLIC; PANEL: DARK CHERRY METALLIC	23	21.56	21.56	43.5
1970256	ROUND 2 STREAM 23G RECYCLING TOP LANDFILL/MIXED RECYCLING	FRAME: BRONZE METALLIC; PANEL: DARK CHERRY METALLIC	23	21.56	21.56	31.82
1970260	ROUND 23G RAIN HOOD	FRAME: JET BLACK METALLIC; PANEL: JET BLACK METALLIC	23	21.56	21.56	40.48

ENHANCE™ (cont)

POWDER COATS

PEARL MOUSE GREY METALLIC | STAINLESS STEEL | STARDUST SILVER METALLIC | JET BLACK METALLIC | UMBRA GREY METALLIC | BRONZE METALLIC | DARK CHERRY METALLIC

SPECIALTY FINISHES

MOCHA | EBONY

SKU #	DESCRIPTION	COLOR	GALLONS	LENGTH (IN.)	WIDTH (IN.)	HEIGHT (IN.)
OUTDOOR						
1970261	ROUND 23G RAIN HOOD WITH SMOKING	FRAME: JET BLACK METALLIC; PANEL: JET BLACK METALLIC	23	21.56	21.56	43.5
1970262	ROUND 2 STREAM 23G RECYCLING TOP LANDFILL/MIXED RECYCLING	FRAME: JET BLACK METALLIC; PANEL: JET BLACK METALLIC	23	21.56	21.56	31.82
1970266	ROUND 33G RAIN HOOD	FRAME: PEARL MOUSE GREY METALLIC; PANEL: UMBRA GREY METALLIC	33	21.56	21.56	47.2
1970267	ROUND 33G RAIN HOOD WITH SMOKING	FRAME: PEARL MOUSE GREY METALLIC; PANEL: UMBRA GREY METALLIC	33	21.56	21.56	50.2
1970268	ROUND 2 STREAM 33G RECYCLING TOP LANDFILL/MIXED RECYCLING	FRAME: PEARL MOUSE GREY METALLIC; PANEL: UMBRA GREY METALLIC	33	21.56	21.56	38.61
1970282	ROUND 33G RAIN HOOD	FRAME: STARDUST SILVER METALLIC; PANEL: ANTHRACITE METALLIC	33	21.56	21.56	47.2
1970283	ROUND 33G RAIN HOOD WITH SMOKING	FRAME: STARDUST SILVER METALLIC; PANEL: ANTHRACITE METALLIC	33	21.56	21.56	50.2
1970284	ROUND 2 STREAM 33G RECYCLING TOP LANDFILL/MIXED RECYCLING	FRAME: STARDUST SILVER METALLIC; PANEL: ANTHRACITE METALLIC	33	21.56	21.56	38.61
1970288	ROUND 33G RAIN HOOD	FRAME: BRONZE METALLIC; PANEL: DARK CHERRY METALLIC	33	21.56	21.56	47.2
1970289	ROUND 33G BRONZE RAIN HOOD WITH SMOKING	FRAME: BRONZE METALLIC; PANEL: DARK CHERRY METALLIC	33	21.56	21.56	50.2
1970290	ROUND 2 STREAM 33G RECYCLING TOP LANDFILL/MIXED RECYCLING	FRAME: BRONZE METALLIC; PANEL: DARK CHERRY METALLIC	33	21.56	21.56	38.61
1970294	ROUND 33G RAIN HOOD	FRAME: JET BLACK METALLIC; PANEL: JET BLACK METALLIC	33	21.56	21.56	47.2
1970295	ROUND 33G RAIN HOOD WITH SMOKING	FRAME: JET BLACK METALLIC; PANEL: JET BLACK METALLIC	33	21.56	21.56	50.2
1970296	ROUND 2 STREAM 33G RECYCLING TOP LANDFILL/MIXED RECYCLING	FRAME: JET BLACK METALLIC; PANEL: JET BLACK METALLIC	33	21.56	21.56	38.61
1970300	PILL 2x23G RAIN HOOD RECYCLING TOP LANDFILL/MIXED RECYCLING	FRAME: PEARL MOUSE GREY METALLIC; PANEL: UMBRA GREY METALLIC	46	41.86	21.72	40.44
1970303	PILL 2x23G RAIN HOOD RECYCLING TOP LANDFILL/ MIXED RECYCLING	FRAME: STARDUST SILVER METALLIC; PANEL: ANTHRACITE METALLIC	46	41.86	21.72	40.44
1970306	PILL 2x23G RAIN HOOD RECYCLING TOP LANDFILL/MIXED RECYCLING	FRAME: BRONZE METALLIC; PANEL: DARK CHERRY METALLIC	46	41.86	21.72	40.44
1970309	PILL 2x23G RAIN HOOD RECYCLING TOP LANDFILL/MIXED RECYCLING	FRAME: JET BLACK METALLIC; PANEL: JET BLACK METALLIC	46	41.86	21.72	40.44

CLASSICS

TEXTURED BRONZE | GREY STENNI GLOSS | TEXTURED BLACK | BLACK GLOSS | STAINLESS STEEL | STARDUST SILVER METALLIC

SKU #	DESCRIPTION	COLOR	GALLONS	LENGTH (IN.)	WIDTH (IN.)	HEIGHT (IN.)
FGS3EGBKPL	RECYCLE OPEN TOP 94L/25G	BLACK GLOSS	25	18.00	18.00	36.00
FGS3EPBKPL	RECYCLE OPEN TOP 94L/25G	BLACK GLOSS	25	18.00	18.00	36.00
FGS3ETBKPL	OPEN TOP 94L/25G	BLACK GLOSS	25	18.00	18.00	36.00
FGS3ETHBZPL	OPEN TOP 94L/25G	TEXTURED BRONZE	25	18.00	18.00	36.00
FGS3ETHGRPL	OPEN TOP 94L/25G	GREY STENNI GLOSS	25	18.00	18.00	36.00
FGS3ETSMPLBK	OPEN TOP 94L/25G	STARDUST SILVER METALLIC W/ BLACK GLOSS LID	25	18.00	18.00	36.00
FGS3SSGBKPL	RECYCLE OPEN TOP 94L/25G	STAINLESS STEEL W/ BLACK GLOSS LID	25	18.00	18.00	36.00
FGS3SSPBKPL	RECYCLE OPEN TOP 94L/25G	STAINLESS STEEL W/ BLACK GLOSS LID	25	18.00	18.00	36.00
FGS3SSTBKPL	OPEN TOP 94L/25G	STAINLESS STEEL W/ BLACK GLOSS LID	25	18.00	18.00	36.00
FGS3SSTSSPL	OPEN TOP 94L/25G	STAINLESS STEEL	25	18.00	18.00	36.00
FGS55ETBKPL	OPEN TOP 193L/51G	BLACK GLOSS	51	24.00	24.00	36.00
FGS55ETSMPLBK	OPEN TOP 193L/51G	STARDUST SILVER METALLIC W/ BLACK GLOSS LID	51	24.00	24.00	36.00
FGS55SSTBKPL	OPEN TOP 193L/51G	STAINLESS STEEL W/ BLACK GLOSS LID	51	24.00	24.00	36.00
FGS55SSTSSPL	OPEN TOP 193L/51G	STAINLESS STEEL	51	24.00	24.00	36.00
FGS55SSTWSBKPL	OPEN TOP WITH WEATHER SHIELD 193L/51G	STAINLESS STEEL W/ BLACK GLOSS LID	51	24.00	24.00	47.00
FGS55ETWSBKPL	OPEN TOP WITH WEATHER SHIELD 193L/51G	BLACK GLOSS	51	24.00	24.00	47.00

SILHOUETTES

DESERT PEARL METALLIC | STARDUST SILVER METALLIC | STAINLESS STEEL | TEXTURED BLACK

SKU #	DESCRIPTION	COLOR	GALLONS	LENGTH (IN.)	WIDTH (IN.)	HEIGHT (IN.)
FGDCR24CDP	SQUARE RECYCLE CAN LID 109L/29G	DESERT PEARL METALLIC	29	18.50	18.50	32.00
FGDCR24CSM	SQUARE RECYCLE CAN LID 109L/29G	STARDUST SILVER METALLIC	29	18.50	18.50	32.00
FGDCR24CSS	SQUARE RECYCLE CAN LID 109L/29G	STAINLESS STEEL	29	18.50	18.50	32.00
FGDCR24CTBK	SQUARE RECYCLE CAN LID 109L/29G	TEXTURED BLACK	29	18.50	18.50	32.00
FGDCR24PDP	SQUARE RECYCLE PAPER LID 109L/29G	DESERT PEARL METALLIC	29	18.50	18.50	32.00
FGDCR24PSM	SQUARE RECYCLE PAPER LID 109L/29G	STARDUST SILVER METALLIC	29	18.50	18.50	32.00
FGDCR24PSS	SQUARE RECYCLE PAPER LID 109L/29G	STAINLESS STEEL	29	18.50	18.50	32.00
FGDCR24PTBK	SQUARE RECYCLE PAPER LID 109L/29G	TEXTURED BLACK	29	18.50	18.50	32.00
FGDCR24TDP	SQUARE RECYCLE TRASH LID 109L/29G	DESERT PEARL METALLIC	29	18.50	18.50	32.00
FGDCR24TSM	SQUARE RECYCLE TRASH LID 109L/29G	STARDUST SILVER METALLIC	29	18.50	18.50	32.00
FGDCR24TSS	SQUARE RECYCLE TRASH LID 109L/29G	STAINLESS STEEL	29	18.50	18.50	32.00
FGDCR24TTBK	SQUARE RECYCLE TRASH LID 109L/29G	TEXTURED BLACK	29	18.50	18.50	32.00
FGSC18EPLDP	SQUARE OPEN TOP 75L/20G	DESERT PEARL METALLIC	20	18.75	18.75	30.00
FGSC18EPLSM	SQUARE OPEN TOP 75L/20G	STARDUST SILVER METALLIC	20	18.75	18.75	30.00
FGSC18EPLTBK	SQUARE OPEN TOP 75L/20G	TEXTURED BLACK	20	18.75	18.75	30.00
FGSC18ERBDP	SQUARE OPEN TOP 109L/29G	DESERT PEARL METALLIC	29	18.75	18.75	30.00
FGSC18ERBSM	SQUARE OPEN TOP 109L/29G	STARDUST SILVER METALLIC	29	18.75	18.75	30.00
FGSC18ERBTBK	SQUARE OPEN TOP 109L/29G	TEXTURED BLACK	29	18.75	18.75	30.00
FGSC18SSPL	SQUARE OPEN TOP 75L/20G	STAINLESS STEEL	20	18.75	18.75	30.00
FGSC18SSRB	SQUARE OPEN TOP 109L/29G	STAINLESS STEEL	29	18.75	18.75	30.00
FGSC10EPLSM	SQUARE OPEN TOP 22L/6G	STARDUST SILVER METALLIC	6	10.75	10.75	25.00
FGSC10EPLTBK	SQUARE OPEN TOP 22L/6G	TEXTURED BLACK	6	10.75	10.75	25.00
FGSC10ERBTBK	SQUARE OPEN TOP 37L/10G	TEXTURED BLACK	10	10.75	10.75	25.00
FGSC10SSPL	SQUARE OPEN TOP 22L/6G	STAINLESS STEEL	6	10.75	10.75	25.00
FGSC10SSRB	SQUARE OPEN TOP 37L/10G	STAINLESS STEEL	10	10.75	10.75	25.00
FGSC14EPLDP	SQUARE OPEN TOP 60L/16G	DESERT PEARL METALLIC	16	14.75	14.75	30.00
FGSC14EPLSM	SQUARE OPEN TOP 60L/16G	STARDUST SILVER METALLIC	16	14.75	14.75	30.00
FGSC14EPLTBK	SQUARE OPEN TOP 60L/16G	TEXTURED BLACK	16	14.75	14.75	30.00
FGSC14ERBDP	SQUARE OPEN TOP 90L/24G	DESERT PEARL METALLIC	24	14.75	14.75	30.00
FGSC14ERBSM	SQUARE OPEN TOP 90L/24G	STARDUST SILVER METALLIC	24	14.75	14.75	30.00
FGSC14ERBTBK	SQUARE OPEN TOP 90L/24G	TEXTURED BLACK	24	14.75	14.75	30.00
FGSC14SSPL	SQUARE OPEN TOP 60L/16G	STAINLESS STEEL	16	14.75	14.75	30.00
FGSC14SSRB	SQUARE OPEN TOP 90L/24G	STAINLESS STEEL	24	14.75	14.75	30.00
FGSC22EPLSM	SQUARE OPEN TOP 151L/40G	STARDUST SILVER METALLIC	40	21.75	21.75	31.25
FGSC22EPLTBK	SQUARE OPEN TOP 151L/40G	TEXTURED BLACK	40	21.75	21.75	31.25
FGSC22EPLDP	SQUARE OPEN TOP 151L/40G	DESERT PEARL METALLIC	40	21.75	21.75	31.25
FGSC22SSPL	SQUARE OPEN TOP 151L/40G	STAINLESS STEEL	40	21.75	21.75	31.25
FGSC22SSRB	SQUARE OPEN TOP 189L/50G	STAINLESS STEEL	50	21.75	21.75	31.25
FGSC22ERBDP	SQUARE OPEN TOP 189L/50G	DESERT PEARL METALLIC	50	21.75	21.75	31.25
FGSC22ERBSM	SQUARE OPEN TOP 189L/50G	STARDUST SILVER METALLIC	50	21.75	21.75	31.25
FGSC22ERBTBK	SQUARE OPEN TOP 189L/50G	TEXTURED BLACK	50	21.75	21.75	31.25
FGSCSUTBK	SQUARE SAND URN	TEXTURED BLACK	N/A	10.75	10.75	25.00
FGSCSUSS	SQUARE SAND URN	STAINLESS STEEL	N/A	10.75	10.75	25.00

SILHOUETTES (cont)

DESERT PEARL METALLIC | STARDUST SILVER METALLIC | STAINLESS STEEL | TEXTURED BLACK

SKU #	DESCRIPTION	COLOR	GALLONS	LENGTH (IN.)	WIDTH (IN.)	HEIGHT (IN.)
FGSR14EPLDP	SMALL RECTANGLE 49L/13G	DESERT PEARL METALLIC	13	19.50	9.75	30.00
FGSR14EPLSM	SMALL RECTANGLE 49L/13G	STARDUST SILVER METALLIC	13	19.50	9.75	30.00
FGSR14EPLTBK	SMALL RECTANGLE 49L/13G	TEXTURED BLACK	13	19.50	9.75	30.00
FGSR14ERBDP	SMALL RECTANGLE 94L/25G	DESERT PEARL METALLIC	25	19.50	9.75	30.00
FGSR14ERBSM	SMALL RECTANGLE 94L/25G	STARDUST SILVER METALLIC	25	19.50	9.75	30.00
FGSR14ERBTBK	SMALL RECTANGLE 94L/25G	TEXTURED BLACK	25	19.50	9.75	30.00
FGSR14SSPL	SMALL RECTANGLE 49L/13G	STAINLESS STEEL	13	19.50	9.75	30.00
FGSR14SSRB	SMALL RECTANGLE 94L/25G	STAINLESS STEEL	25	19.50	9.75	30.00
FGSR18EPLDP	LARGE RECTANGLE 85L/22.5G	DESERT PEARL METALLIC	22.5	24.00	12.00	30.00
FGSR18EPLSM	LARGE RECTANGLE 85L/22.5G	STARDUST SILVER METALLIC	22.5	24.00	12.00	30.00
FGSR18EPLTBK	LARGE RECTANGLE 85L/22.5G	TEXTURED BLACK	22.5	24.00	12.00	30.00
FGSR18ERBDP	LARGE RECTANGLE 151L/40G	DESERT PEARL METALLIC	40	24.00	12.00	30.00
FGSR18ERBSM	LARGE RECTANGLE 151L/40G	STARDUST SILVER METALLIC	40	24.00	12.00	30.00
FGSR18ERBTBK	LARGE RECTANGLE 151L/40G	TEXTURED BLACK	40	24.00	12.00	30.00
FGSR18SSPL	LARGE RECTANGLE 85L/22.5G	STAINLESS STEEL	22.5	24.00	12.00	30.00
FGSR18SSRB	LARGE RECTANGLE 151L/40G	STAINLESS STEEL	40	24.00	12.00	30.00
FGDRR24CDP	ROUND RECYCLE CAN LID 98L/26G	DESERT PEARL METALLIC	26	20.00	20.00	31.25
FGDRR24CSM	ROUND RECYCLE CAN LID 98L/26G	STARDUST SILVER METALLIC	26	20.00	20.00	31.25
FGDRR24CSS	ROUND RECYCLE CAN LID 98L/26G	STAINLESS STEEL	26	20.00	20.00	31.25
FGDRR24CTBK	ROUND RECYCLE CAN LID 98L/26G	TEXTURED BLACK	26	20.00	20.00	31.25
FGDRR24PDP	ROUND RECYCLE PAPER LID 98L/26G	DESERT PEARL METALLIC	26	20.00	20.00	31.25
FGDRR24PTBK	ROUND RECYCLE PAPER LID 98L/26G	TEXTURED BLACK	26	20.00	20.00	31.25
FGDRR24TDP	ROUND RECYCLE TRASH LID 98L/26G	DESERT PEARL METALLIC	26	20.00	20.00	31.25
FGDRR24TSM	ROUND RECYCLE TRASH LID 98L/26G	STARDUST SILVER METALLIC	26	20.00	20.00	31.25
FGDRR24TSS	ROUND RECYCLE TRASH LID 98L/26G	STAINLESS STEEL	26	20.00	20.00	31.25
FGDRR24TTBK	ROUND RECYCLE TRASH LID 98L/26G	TEXTURED BLACK	26	20.00	20.00	31.25
FGDRR24PSM	ROUND RECYCLE PAPER LID 98L/26G	STARDUST SILVER METALLIC	26	20.00	20.00	31.25
FGDRR24PSS	ROUND RECYCLE PAPER LID 98L/26G	STAINLESS STEEL	26	20.00	20.00	31.25

METALLIC SERIES

ANTHRACITE METALLIC | ALMOND GLOSS | BLACK GLOSS | CRIMSON GLOSS | GREEN GLOSS | MIRROR CHROME | SATIN BRASS | TEXTURED BROWN BRASS

SKU #	DESCRIPTION	COLOR	GALLONS	LENGTH (IN.)	WIDTH (IN.)	HEIGHT (IN.)
FG1000EBK	SAND URN	BLACK GLOSS	N/A	10.00	10.00	20.00
FG110010BK	ASH/TRASH 13L/3.5G	BLACK GLOSS W/ BRASS TRIM	3.5	10.00	10.00	27.00
FG1100EBK	ASH/TRASH 13L/3.5G	BLACK GLOSS	3.5	10.00	10.00	27.00
FG1100SBS	ASH/TRASH 13L/3.5G	SATIN BRASS STAINLESS STEEL	3.5	10.00	10.00	27.00
FG1100SSS	ASH/TRASH 13L/3.5G	STAINLESS STEEL	3.5	10.00	10.00	27.00
FGCC16SSSGL	OPEN TOP 56L/15G	STAINLESS STEEL	15	15.00	15.00	28.00
FGCC1610GLBK	OPEN TOP 56L/15G	BLACK GLOSS W/ BRASS TRIM	15	15.00	15.00	28.00
FGCC16EGLBK	OPEN TOP 56L/15G	BLACK GLOSS	15	15.00	15.00	28.00
FGCC16MCGL	OPEN TOP 56L/15G	MIRROR CHROME	15	15.00	15.00	28.00
FGCC16SBSGL	OPEN TOP 56L/15G	SATIN BRASS STAINLESS STEEL	15	15.00	15.00	28.00
FGSO16SSSGL	FLAT TOP 45L/12G	STAINLESS STEEL	12	15.00	15.00	28.00
FGSO1610GLBK	FLAT TOP 45L/12G	BLACK GLOSS W/ BRASS TRIM	12	15.00	15.00	28.00
FGSO1610GLCR	FLAT TOP 45L/12G	CRIMSON W/ BRASS TRIM	12	15.00	15.00	28.00

METALLIC SERIES (cont)

ANTHRACITE METALLIC · ALMOND GLOSS · BLACK GLOSS · CRIMSON GLOSS · GREEN GLOSS · MIRROR CHROME · SATIN BRASS · TEXTURED BROWN BRASS

SKU #	DESCRIPTION	COLOR	GALLONS	LENGTH (IN.)	WIDTH (IN.)	HEIGHT (IN.)
FGSO1610GLEGN	FLAT TOP 45L/12G	GREEN GLOSS W/ BRASS TRIM	12	15.00	15.00	28.00
FGSO16SU10GLEGN	ASH/TRASH 45L/12G	GREEN GLOSS W/ BRASS TRIM	12	15.00	15.00	28.00
FGSO1620GLANT	FLAT TOP 45L/12G	ANTHRACITE METALLIC W/ CHROME TRIM	12	15.00	15.00	28.00
FGSO1620GLBK	FLAT TOP 45L/12G	BLACK GLOSS W/ CHROME TRIM	12	15.00	15.00	28.00
FGSO16EGLAL	FLAT TOP 45L/12G	ALMOND GLOSS	12	15.00	15.00	28.00
FGSO16SBSGL	FLAT TOP 45L/12G	SATIN BRASS STAINLESS STEEL	12	15.00	15.00	28.00
FGSO16SU10GLBK	ASH/TRASH 45L/12G	BLACK GLOSS W/ BRASS TRIM	12	15.00	15.00	28.00
FGSO16SU10GLCR	ASH/TRASH 45L/12G	CRIMSON W/ BRASS TRIM	12	15.00	15.00	28.00
FGSO16SU20GLANT	ASH/TRASH 45L/12G	ANTHRACITE METALLIC W/ CHROME TRIM	12	15.00	15.00	28.00
FGSO16SU20GLBK	ASH/TRASH 45L/12G	BLACK GLOSS W/ CHROME TRIM	12	15.00	15.00	28.00
FGSO16SUEGLAL	ASH/TRASH 45L/12G	ALMOND GLOSS	12	15.00	15.00	28.00
FGSO16SUMCGL	ASH/TRASH 45L/12G	MIRROR CHROME	12	15.00	15.00	28.00
FGSO16SUSBSGL	ASH/TRASH 45L/12G	SATIN BRASS STAINLESS STEEL	12	15.00	15.00	28.00
FGSO16SUSSSGL	ASH/TRASH 45L/12G	STAINLESS STEEL	12	15.00	15.00	28.00
FGSO17SBBRGL	FLAT TOP 56L/15G	TEXTURED BROWN W/ BRASS TRIM	15	15.00	15.00	33.50
FGSO17SCGRGL	FLAT TOP 56L/15G	TEXTURED GLOSS GREY W/ CHROME TRIM	15	15.00	15.00	33.50
FGSO17SUSBBRGL	ASH/TRASH 56L/15G	TEXTURED BROWN W/ BRASS TRIM	15	15.00	15.00	33.50
FGSO17SUSCGRGL	ASH/TRASH 56L/15G	TEXTURED GLOSS GREY W/ CHROME TRIM	15	15.00	15.00	33.50
FGUB1900SSS	WASTEBASKET 18L/5G	STAINLESS STEEL	5	10.00	10.00	15.00
FGUB190010BK	WASTEBASKET 18L/5G	BLACK GLOSS W/ BRASS TRIM	5	10.00	10.00	15.00
FGUB1900EBK	WASTEBASKET 18L/5G	BLACK GLOSS	5	10.00	10.00	15.00

ATRIUM®

SATIN ALUMINUM · SATIN BRASS ALUMINUM

SKU #	DESCRIPTION	COLOR	GALLONS	LENGTH (IN.)	WIDTH (IN.)	HEIGHT (IN.)
FGATF18SAPL	FLIP TOP 56L/15G	SATIN ALUMINUM	15	14.00	14.00	27.00
FGAOT35SAGL	OPEN TOP 79L/21G	SATIN ALUMINUM	21	18.00	18.00	32.00
FGAOT35SAPL	OPEN TOP 79L/21G	SATIN ALUMINUM	21	18.00	18.00	32.00
FGAOT35SB	OPEN TOP 132L/35G	SATIN BRASS ALUMINUM	35	18.00	18.00	32.00
FGAOT35SA	OPEN TOP 132L/35G	SATIN ALUMINUM	35	18.00	18.00	32.00
FGAOT62SAPL	OPEN TOP 208L/55G	SATIN ALUMINUM	55	24.00	24.00	35.00
FGAOT62SA	OPEN TOP 234L/62G	SATIN ALUMINUM	62	24.00	24.00	35.00
FGAOT62SB	OPEN TOP 234L/62G	SATIN BRASS ALUMINUM	62	24.00	24.00	35.00
FGAOT35SB	OPEN TOP 132L/35G	SATIN BRASS ALUMINUM	35	18.00	18.00	32.00

HALF ROUNDS

ANTHRACITE METALLIC · BLACK GLOSS · TEXTURED BLACK · CRIMSON GLOSS · DESERT PEARL · GREEN GLOSS · SATIN BRASS · STAINLESS STEEL · STARDUST SILVER METALLIC

SKU #	DESCRIPTION	COLOR	GALLONS	LENGTH (IN.)	WIDTH (IN.)	HEIGHT (IN.)
FGSO8SSSPL	34L/9G	STAINLESS STEEL	9	9.00	18.00	32.00
FGSO820PLBK	34L/9G	BLACK GLOSS W/ CHROME TRIM	9	9.00	18.00	32.00
FGSO810PLBK	34L/9G	BLACK GLOSS W/ BRASS TRIM	9	9.00	18.00	32.00
FGSO810PLCR	34L/9G	CRIMSON W/ BRASS TRIM	9	9.00	18.00	32.00
FGSO820PLANT	34L/9G	ANTHRACITE METALLIC W/ CHROME TRIM	9	9.00	18.00	32.00
FGSO8SBSPL	34L/9G	SATIN BRASS STAINLESS STEEL	9	9.00	18.00	32.00

HALF ROUNDS (cont)

ANTHRACITE METALLIC · BLACK GLOSS · TEXTURED BLACK · CRIMSON GLOSS · DESERT PEARL METALLIC · GREEN GLOSS · SATIN BRASS · STAINLESS STEEL · STARDUST SILVER METALLIC

SKU #	DESCRIPTION	COLOR	GALLONS	LENGTH (IN.)	WIDTH (IN.)	HEIGHT (IN.)
FGSO8SU10PLBK	ASH/TRASH 34L/9G	BLACK GLOSS W/ BRASS TRIM	9	9.00	18.00	32.00
FGSO8SU10PLEGN	ASH/TRASH 34L/9G	GREEN GLOSS W/ BRASS TRIM	9	9.00	18.00	32.00
FGSO8SU20PLANT	ASH/TRASH 34L/9G	ANTHRACITE METALLIC W/ CHROME TRIM	9	9.00	18.00	32.00
FGSO8SU20PLBK	ASH/TRASH 34L/9G	BLACK GLOSS W/ CHROME TRIM	9	9.00	18.00	32.00
FGSO8SUSSSPL	ASH/TRASH 34L/9G	STAINLESS STEEL	9	9.00	18.00	32.00
FGSH12EPLSM	OPEN TOP 45L/12G	STARDUST SILVER METALLIC	12	9.00	18.00	32.00
FGSH12EPLTBK	OPEN TOP 45L/12G	TEXTURED BLACK	12	9.00	18.00	32.00
FGSH12EPLDP	OPEN TOP 45L/12G	DESERT PEARL METALLIC	12	9.00	18.00	32.00
FGSH12SSPL	OPEN TOP 45L/12G	STAINLESS STEEL	12	9.00	18.00	32.00
FGSO1220PLBK	OPEN TOP 45L/12G	BLACK GLOSS W/ CHROME TRIM	12	9.00	18.00	32.00
FGSO12SSSPL	OPEN TOP 45L/12G	STAINLESS STEEL	12	9.00	18.00	32.00

CROWNE

BLACK GLOSS · TEXTURED BLACK · TEXTURED GREY · SATIN ALUMINUM · SATIN BRASS · TEXTURED BROWN BRASS

SKU #	DESCRIPTION	COLOR	GALLONS	LENGTH (IN.)	WIDTH (IN.)	HEIGHT (IN.)
FGAOT15BKPL	OPEN TOP 56L/15G	BLACK GLOSS	15	15.00	15.00	30.00
FGAOT15SABKPL	OPEN TOP 56L/15G	TEXTURED BLACK W/ALUMINUM LID	15	15.00	15.00	30.00
FGAOT15SAGRPL	OPEN TOP 56L/15G	TEXTURED GLOSS GREY W/ALUMINUM LID	15	15.00	15.00	30.00
FGAOT15SAPL	OPEN TOP 56L/15G	SATIN ALUMINUM	15	15.00	15.00	30.00
FGAOT15SBBRPL	OPEN TOP 56L/15G	TEXTURED BROWN BRASS LID	15	15.00	15.00	30.00
FGAOT15SBPL	OPEN TOP 56L/15G	SATIN BRASS	15	15.00	15.00	30.00
FGAOT30BKPL	OPEN TOP 113L/30G	TEXTURED BLACK	30	20.00	20.00	34.50
FGAOT30SABKPL	OPEN TOP 113L/30G	BLACK GLOSS W/ALUMINUM LID	30	20.00	20.00	34.50
FGAOT30SAGRPL	OPEN TOP 113L/30G	TEXTURED GREY W/ALUMINUM LID	30	20.00	20.00	34.50
FGAOT30SAPL	OPEN TOP 113L/30G	SATIN ALUMINUM	30	20.00	20.00	34.50
FGAOT30SBBRPL	OPEN TOP 113L/30G	BROWN GLOSS W/ BRASS LID	30	20.00	20.00	34.50
FGAOT30SBPL	OPEN TOP 113L/30G	SATIN BRASS	30	20.00	20.00	34.50

WASTEMASTER

SKY WHITE GLOSS · STAINLESS STEEL

SKU #	DESCRIPTION	COLOR	GALLONS	LENGTH (IN.)	WIDTH (IN.)	HEIGHT (IN.)
FGB1414SSPL	OPEN TOP 39L/10.5G	STAINLESS STEEL	10.5	14.00	14.00	21.00
FGB1414SSRB	OPEN TOP 53L/14G	STAINLESS STEEL	14	14.00	14.00	21.00
FGT1414EPLWH	SWING TOP 39L/10.5G	SKY WHITE GLOSS	10.5	14.00	14.00	26.00
FGT1414ERBWH	SWING TOP 53L/14G	SKY WHITE GLOSS	14	14.00	14.00	26.00
FGT1414SSPL	SWING TOP 39L/10.5G	STAINLESS STEEL	10.5	14.00	14.00	26.00
FGT1414SSRB	SWING TOP 53L/14G	STAINLESS STEEL	14	14.00	14.00	26.00
FGB1424SSPL	OPEN TOP 60L/16G	STAINLESS STEEL	16	14.00	14.00	30.00
FGB1424SSRB	OPEN TOP 90L/24G	STAINLESS STEEL	24	14.00	14.00	30.00
FGT1424EPLWH	SWING TOP 60L/16G	SKY WHITE GLOSS	16	14.00	14.00	35.50
FGT1424ERBWH	SWING TOP 90L/24G	SKY WHITE GLOSS	24	14.00	14.00	35.50
FGT1424SSPL	SWING TOP 60L/16G	STAINLESS STEEL	16	14.00	14.00	35.50
FGT1424SSRB	SWING TOP 90L/24G	STAINLESS STEEL	24	14.00	14.00	35.50
FGB1940SSPL	OPEN TOP 109L/29G	STAINLESS STEEL	29	19.00	19.00	30.00
FGB1940SSRB	OPEN TOP 151L/40G	STAINLESS STEEL	40	19.00	19.00	30.00
FGT1940EPLWH	SWING TOP 109L/29G	SKY WHITE GLOSS	29	19.00	19.00	38.00
FGT1940ERBWH	SWING TOP 151L/40G	SKY WHITE GLOSS	40	19.00	19.00	38.00
FGT1940SSPL	SWING TOP 109L/29G	STAINLESS STEEL	29	19.00	19.00	38.00
FGT1940SSRB	SWING TOP 151L/40G	STAINLESS STEEL	40	19.00	19.00	38.00

ROUND-TOPS

ANTHRACITE METALLIC · BLACK GLOSS · SIGNAL BLUE GLOSS · CRIMSON GLOSS · GREEN GLOSS · MIRROR CHROME · STAINLESS STEEL · RED GLOSS · SATIN BRASS · TEXTURED BROWN BRASS · STARDUST SILVER METALLIC · PINE GREEN GLOSS · SKY WHITE GLOSS

SKU #	DESCRIPTION	COLOR	GALLONS	LENGTH (IN.)	WIDTH (IN.)	HEIGHT (IN.)
FGR1530EGLBK	45L/12G	BLACK GLOSS	12	15.00	15.00	30.00
FGR1530EGLCOB	45L/12G	SIGNAL BLUE GLOSS	12	15.00	15.00	30.00
FGR1530EGLRD	45L/12G	RED GLOSS	12	15.00	15.00	30.00
FGR1530EGLSPGN	45L/12G	GREEN GLOSS	12	15.00	15.00	30.00
FGR1530EGLWH	45L/12G	SKY WHITE GLOSS	12	15.00	15.00	30.00
FGR1530EPLRD	45L/12G	RED GLOSS	12	15.00	15.00	30.00
FGR1530EPLWH	45L/12G	SKY WHITE GLOSS	12	15.00	15.00	30.00
FGR1530EPLBK	45L/12G	BLACK GLOSS	12	15.00	15.00	30.00
FGR1530EPLCOB	45L/12G	SIGNAL BLUE GLOSS	12	15.00	15.00	30.00
FGR1530EPLSPGN	45L/12G	GREEN GLOSS	12	15.00	15.00	30.00
FGR1530SMGL	45L/12G	STARDUST SILVER METALLIC	12	15.00	15.00	30.00
FGR1530MCGL	45L/12G	MIRROR CHROME	12	15.00	15.00	30.00
FGR1530MCPL	45L/12G	MIRROR CHROME	12	15.00	15.00	30.00
FGR153610GLBK	56L/15G	BLACK GLOSS W/ BRASS TRIM	15	15.00	15.00	36.00
FGR153610GLCR	56L/15G	CRIMSON W/ BRASS TRIM	15	15.00	15.00	36.00
FGR153610PLBK	56L/15G	BLACK GLOSS W/ BRASS TRIM	15	15.00	15.00	36.00
FGR153610PLCR	56L/15G	CRIMSON W/ BRASS TRIM	15	15.00	15.00	36.00
FGR153610PLEGN	56L/15G	GREEN GLOSS W/ BRASS TRIM	15	15.00	15.00	36.00
FGR153610GLEGN	56L/15G	GREEN GLOSS W/ BRASS TRIM	15	15.00	15.00	36.00
FGR153620BPLBK	56L/15G	BLACK GLOSS W/ CHROME TRIM	15	15.00	15.00	36.00
FGR153620GLANT	56L/15G	ANTHRACITE METALLIC W/ CHROME TRIM	15	15.00	15.00	36.00
FGR153620GLBK	56L/15G	BLACK GLOSS W/ CHROME TRIM	15	15.00	15.00	36.00
FGR153620PLANT	56L/15G	ANTHRACITE METALLIC W/ CHROME TRIM	15	15.00	15.00	36.00
FGR1536MCGL	56L/15G	MIRROR CHROME	15	15.00	15.00	36.00
FGR1536MCPL	56L/15G	MIRROR CHROME	15	15.00	15.00	36.00
FGR1536SBSGL	56L/15G	SATIN BRASS STAINLESS STEEL	15	15.00	15.00	36.00
FGR1536SBSPL	56L/15G	SATIN BRASS STAINLESS STEEL	15	15.00	15.00	36.00
FGR1536SSSGL	56L/15G	STAINLESS STEEL	15	15.00	15.00	36.00
FGR1536SSSPL	56L/15G	STAINLESS STEEL	15	15.00	15.00	36.00
FGR1536EGLAL	56L/15G	ALMOND GLOSS	15	15.00	15.00	36.00
FGR1536EGLBK	56L/15G	BLACK GLOSS	15	15.00	15.00	36.00
FGR1536EGLCOB	56L/15G	SIGNAL BLUE GLOSS	15	15.00	15.00	36.00
FGR1536EGLRD	56L/15G	RED GLOSS	15	15.00	15.00	36.00
FGR1536EGLSPGN	56L/15G	GREEN GLOSS	15	15.00	15.00	36.00
FGR1536EGLWH	56L/15G	SKY WHITE GLOSS	15	15.00	15.00	36.00
FGR1536EPLAL	56L/15G	ALMOND GLOSS	15	15.00	15.00	36.00
FGR1536EPLBK	56L/15G	BLACK GLOSS	15	15.00	15.00	36.00
FGR1536EPLCOB	56L/15G	SIGNAL BLUE GLOSS	15	15.00	15.00	36.00
FGR1536EPLRD	56L/15G	RED GLOSS	15	15.00	15.00	36.00
FGR1536EPLSPGN	56L/15G	GREEN GLOSS	15	15.00	15.00	36.00
FGR1536EPLWH	56L/15G	SKY WHITE GLOSS	15	15.00	15.00	36.00
FGR1536SCGRGL	56L/15G	TEXTURED GREY W/ CHROME TRIM	15	15.00	15.00	36.00
FGR1536SCGRPL	56L/15G	TEXTURED GREY W/ CHROME TRIM	15	15.00	15.00	36.00
FGR1536SMGL	56L/15G	STARDUST SILVER METALLIC	15	15.00	15.00	36.00
FGR1536SMPL	56L/15G	STARDUST SILVER METALLIC	15	15.00	15.00	36.00
FGR1536SBBRGL	56L/15G	TEXTURED BROWN W/ BRASS TRIM	15	15.00	15.00	36.00

ROUND-TOPS (cont)

ANTHRACITE METALLIC · BLACK GLOSS · SIGNAL BLUE GLOSS · CRIMSON GLOSS · GREEN GLOSS · MIRROR CHROME · STAINLESS STEEL · RED GLOSS · SATIN BRASS · TEXTURED BROWN BRASS · STARDUST SILVER METALLIC · PINE GREEN GLOSS · SKY WHITE GLOSS

SKU #	DESCRIPTION	COLOR	GALLONS	LENGTH (IN.)	WIDTH (IN.)	HEIGHT (IN.)
FGR1536SBBRPL	56L/15G	TEXTURED BROWN W/ BRASS TRIM	15	15.00	15.00	36.00
FGR1536STEGLSM	STEP CAN 56L/15G	STARDUST SILVER METALLIC	15	15.00	15.00	36.00
FGR1536STEGLWH	STEP CAN 56L/15G	SKY WHITE GLOSS	15	15.00	15.00	36.00
FGR1536STEPLSM	STEP CAN 56L/15G	STARDUST SILVER METALLIC	15	15.00	15.00	36.00
FGR1536STEPLWH	STEP CAN 56L/15G	SKY WHITE GLOSS	15	15.00	15.00	36.00
FGR1536EOTGLBK	OPEN TOP 56L/15G	BLACK GLOSS	15	15.00	15.00	35.00
FGR1536EOTPLBK	OPEN TOP 56L/15G	BLACK GLOSS	15	15.00	15.00	35.00
FGR1842EGLWH	79L/21G	SKY WHITE GLOSS	21	18.00	18.00	42.00
FGR1842EPLWH	79L/21G	SKY WHITE GLOSS	21	18.00	18.00	42.00
FGR1842EPLBK	79L/21G	BLACK GLOSS	21	18.00	18.00	42.00
FGR32SSSGL	OPEN TOP 56L/15G	STAINLESS STEEL	15	15.00	15.00	32.00
FGR32EGLBK	OPEN TOP 56L/15G	BLACK GLOSS	15	15.00	15.00	32.00
FGR32EGLWH	OPEN TOP 56L/15G	SKY WHITE GLOSS	15	15.00	15.00	32.00
FGR32SBSGL	OPEN TOP 56L/15G	SATIN BRASS STAINLESS STEEL	15	15.00	15.00	32.00
FGR32SBSGL	OPEN TOP 56L/15G	SATIN BRASS STAINLESS STEEL	15	15.00	15.00	32.00

DEFENDERS®

RED GLOSS · STAINLESS STEEL · SKY WHITE GLOSS

SKU #	DESCRIPTION	COLOR	GALLONS	LENGTH (IN.)	WIDTH (IN.)	HEIGHT (IN.)
FGST7EPLRD	SQUARE STEP CAN 15L/4G	RED GLOSS	4	12.00	12.00	17.00
FGST7EPLWH	SQUARE STEP CAN 15L/4G	SKY WHITE GLOSS	4	12.00	12.00	17.00
FGST7ERBRD	SQUARE STEP CAN 27L/7G	RED GLOSS	7	12.00	12.00	17.00
FGST7ERBWH	SQUARE STEP CAN 27L/7G	SKY WHITE GLOSS	7	12.00	12.00	17.00
FGST7SSPL	SQUARE STEP CAN 15L/4G	STAINLESS STEEL	4	12.00	12.00	17.00
FGST7SSRB	SQUARE STEP CAN 27L/7G	STAINLESS STEEL	7	12.00	12.00	17.00
FGQST7EPLRD	SQUARE QUIET STEP CAN 15L/4G	RED GLOSS	4	12.00	12.00	17.00
FGQST7EPLWH	SQUARE QUIET STEP CAN 15L/4G	SKY WHITE GLOSS	4	12.00	12.00	17.00
FGQST7ERBRD	SQUARE QUIET STEP CAN 27L/7G	RED GLOSS	7	12.00	12.00	17.00
FGQST7ERBWH	SQUARE QUIET STEP CAN 27L/7G	SKY WHITE GLOSS	7	12.00	12.00	17.00
FGQST7SSPL	SQUARE QUIET STEP CAN 15L/4G	STAINLESS STEEL	4	12.00	12.00	17.00
FGQST7SSRB	SQUARE QUIET STEP CAN 27L/7G	STAINLESS STEEL	7	12.00	12.00	17.00
FGST12EPLWH	SQUARE STEP CAN 25L/6.5G	SKY WHITE GLOSS	6.5	12.00	12.00	23.00
FGST12EPLRD	SQUARE STEP CAN 25L/6.5G	RED GLOSS	6.5	12.00	12.00	23.00
FGST12ERBRD	SQUARE STEP CAN 45L/12G	RED GLOSS	12	12.00	12.00	23.00
FGST12ERBWH	SQUARE STEP CAN 45L/12G	SKY WHITE GLOSS	12	12.00	12.00	23.00
FGST12SSPL	SQUARE STEP CAN 25L/6.5G	STAINLESS STEEL	6.5	12.00	12.00	23.00
FGST12SSRB	SQUARE STEP CAN 45L/12G	STAINLESS STEEL	12	12.00	12.00	23.00
FGQST12EPLRD	SQUARE QUIET STEP CAN 25L/6.5G	RED GLOSS	6.5	12.00	12.00	23.00
FGQST12EPLWH	SQUARE QUIET STEP CAN 25L/6.5G	SKY WHITE GLOSS	6.5	12.00	12.00	23.00
FGQST12ERBRD	SQUARE QUIET STEP CAN 45L/12G	RED GLOSS	12	12.00	12.00	23.00
FGQST12ERBWH	SQUARE QUIET STEP CAN 45L/12G	SKY WHITE GLOSS	12	12.00	12.00	23.00
FGQST12SSPL	SQUARE QUIET STEP CAN 25L/6.5G	STAINLESS STEEL	6.5	12.00	12.00	23.00
FGQST12SSRB	SQUARE QUIET STEP CAN 45L/12G	STAINLESS STEEL	12	12.00	12.00	23.00
FGST24EPLWH	SQUARE STEP CAN 49L/13G	SKY WHITE GLOSS	13	15.00	15.00	30.00
FGST24SSPL	SQUARE STEP CAN 49L/13G	STAINLESS STEEL	13	15.00	15.00	30.00
FGST24ERBWH	SQUARE STEP CAN 91L/24G	SKY WHITE GLOSS	24	15.00	15.00	30.00
FGST24EPLRD	SQUARE STEP CAN 49L/13G	RED GLOSS	13	15.00	15.00	30.00
FGST24ERBRD	SQUARE STEP CAN 91L/24G	RED GLOSS	24	15.00	15.00	30.00
FGST24SSRB	SQUARE STEP CAN 91L/24G	STAINLESS STEEL	24	15.00	15.00	30.00

DEFENDERS® (cont)

RED GLOSS | STAINLESS STEEL | SKY WHITE GLOSS

SKU #	DESCRIPTION	COLOR	GALLONS	LENGTH (IN.)	WIDTH (IN.)	HEIGHT (IN.)
FGQST24EPLRD	SQUARE QUIET STEP CAN 49L/13G	RED GLOSS	13	15.00	15.00	30.00
FGQST24EPLWH	SQUARE QUIET STEP CAN 49L/13G	SKY WHITE GLOSS	13	15.00	15.00	30.00
FGQST24ERBRD	SQUARE QUIET STEP CAN 91L/24G	RED GLOSS	24	15.00	15.00	30.00
FGQST24ERBWH	SQUARE QUIET STEP CAN 91L/24G	SKY WHITE GLOSS	24	15.00	15.00	30.00
FGQST24SSPL	SQUARE QUIET STEP CAN 49L/13G	STAINLESS STEEL	13	15.00	15.00	30.00
FGQST24SSRB	SQUARE QUIET STEP CAN 91L/24G	STAINLESS STEEL	24	15.00	15.00	30.00
FGST40EPLRD	SQUARE STEP CAN 95L/25G	RED GLOSS	25	19.00	19.00	30.00
FGST40EPLWH	SQUARE STEP CAN 95L/25G	SKY WHITE GLOSS	25	19.00	19.00	30.00
FGST40ERBRD	SQUARE STEP CAN 151L/40G	RED GLOSS	40	19.00	19.00	30.00
FGST40ERBWH	SQUARE STEP CAN 151L/40G	SKY WHITE GLOSS	40	19.00	19.00	30.00
FGST40EWPLRD	SQUARE STEP CAN WITH WHEELS 95L/25G	RED GLOSS	25	19.00	19.00	30.00
FGST40EWPLWH	SQUARE STEP CAN WITH WHEELS 95L/25G	SKY WHITE GLOSS	25	19.00	19.00	30.00
FGST40EWRBRD	SQUARE STEP CAN WITH WHEELS 151L/40G	RED GLOSS	40	19.00	19.00	30.00
FGST40EWRBWH	SQUARE STEP CAN WITH WHEELS 151L/40G	SKY WHITE GLOSS	40	19.00	19.00	30.00
FGST40SSPL	SQUARE STEP CAN 95L/25G	STAINLESS STEEL	25	19.00	19.00	30.00
FGST40SSRB	SQUARE STEP CAN 151L/40G	STAINLESS STEEL	40	19.00	19.00	30.00
FGST40SWPL	SQUARE STEP CAN WITH WHEELS 95L/25G	STAINLESS STEEL	25	19.00	19.00	30.00
FGST40SWRB	SQUARE STEP CAN WITH WHEELS 151L/40G	STAINLESS STEEL	40	19.00	19.00	30.00
FGQST40EPLRD	SQUARE QUIET STEP CAN 95L/25G	RED GLOSS	25	19.00	19.00	30.00
FGQST40EPLWH	SQUARE QUIET STEP CAN 95L/25G	SKY WHITE GLOSS	25	19.00	19.00	30.00
FGQST40ERBRD	SQUARE QUIET STEP CAN 151L/40G	RED GLOSS	40	19.00	19.00	30.00
FGQST40ERBWH	SQUARE QUIET STEP CAN 151L/40G	SKY WHITE GLOSS	40	19.00	19.00	30.00
FGQST40EWPLRD	SQUARE QUIET STEP CAN WITH WHEELS 95L/25G	RED GLOSS	25	19.00	19.00	30.00
FGQST40EWPLWH	SQUARE QUIET STEP CAN WITH WHEELS 95L/25G	SKY WHITE GLOSS	25	19.00	19.00	30.00
FGQST40EWRBRD	SQUARE QUIET STEP CAN WITH WHEELS 151L/40G	RED GLOSS	40	19.00	19.00	30.00
FGQST40EWRBWH	SQUARE QUIET STEP CAN WITH WHEELS 151L/40G	SKY WHITE GLOSS	40	19.00	19.00	30.00
FGQST40SSPL	SQUARE QUIET STEP CAN 95L/25G	STAINLESS STEEL	25	19.00	19.00	30.00
FGQST40SSRB	SQUARE QUIET STEP CAN 151L/40G	STAINLESS STEEL	40	19.00	19.00	30.00
FGQST40SWPL	SQUARE QUIET STEP CAN WITH WHEELS 95L/25G	STAINLESS STEEL	25	19.00	19.00	30.00
FGQST40SWRB	SQUARE QUIET STEP CAN WITH WHEELS 151L/40G	STAINLESS STEEL	40	19.00	19.00	30.00
FGST5EGLRD	ROUND STEP CAN 18L/5G	RED GLOSS	5	11.00	11.00	22.00
FGST5EGLWH	ROUND STEP CAN 18L/5G	SKY WHITE GLOSS	5	11.00	11.00	22.00
FGST35EGLRD	ROUND STEP CAN 13L/3.5G	RED GLOSS	3.5	11.00	11.00	17.00
FGST35EGLWH	ROUND STEP CAN 13L/3.5G	SKY WHITE GLOSS	3.5	11.00	11.00	17.00
FGST35EPLRD	ROUND STEP CAN 13L/3.5G	RED GLOSS	3.5	11.00	11.00	17.00
FGST35EPLWH	ROUND STEP CAN 13L/3.5G	SKY WHITE GLOSS	3.5	11.00	11.00	17.00
FGST35SSGL	ROUND STEP CAN 13L/3.5G	STAINLESS STEEL	3.5	11.00	11.00	17.00
FGST35SSPL	ROUND STEP CAN 13L/3.5G	STAINLESS STEEL	3.5	11.00	11.00	17.00
FGST40EWRBRD	SQUARE STEP CAN WHEELS 151L/40G	RED	40	19.00	19.00	30.00
FGST40EWRBWH	SQUARE STEP CAN WHEELS 151L/40G	WHITE	40	19.00	19.00	30.00

COLLECT-A-CUBES™

BEIGE GLOSS

SKU #	DESCRIPTION	COLOR	GALLONS	LENGTH (IN.)	WIDTH (IN.)	HEIGHT (IN.)
FGNC24C	CAN LID 85L/22.5G	BEIGE GLOSS	22.5	15.75	15.75	24.00
FGNC24C2	CAN LID 85L/22.5G	BEIGE GLOSS	22.5	15.75	15.75	24.00
FGNC24C3	CAN LID 85L/22.5G	BEIGE GLOSS	22.5	15.75	15.75	24.00
FGNC24C3L	CAN LID LOCK 85L/22.5G	BEIGE GLOSS	22.5	15.75	15.75	24.00

COLLECT-A-CUBES™ (cont)

BEIGE GLOSS

SKU #	DESCRIPTION	COLOR	GALLONS	LENGTH (IN.)	WIDTH (IN.)	HEIGHT (IN.)
FGNC24P10	PAPER LID 85L/22.5G	BEIGE GLOSS	22.5	15.75	15.75	24.00
FGNC24P5	PAPER LID 85L/22.5G	BEIGE GLOSS	22.5	15.75	15.75	24.00
FGNC24P5L	PAPER LID LOCK 85L/22.5G	BEIGE GLOSS	22.5	15.75	15.75	24.00
FGNC24W2	WASTE LID 85L/22.5G	BEIGE GLOSS	22.5	15.75	15.75	24.00
FGNC24W3	WASTE LID 85L/22.5G	BEIGE GLOSS	22.5	15.75	15.75	24.00
FGNC24W4	WASTE LID 85L/22.5G	BEIGE GLOSS	22.5	15.75	15.75	24.00
FGNC24W4L	WASTE LID LOCK 85L/22.5G	BEIGE GLOSS	22.5	15.75	15.75	24.00
FGNC24W5	WASTE LID 85L/22.5G	BEIGE GLOSS	22.5	15.75	15.75	24.00
FGNC30C	CAN LID 107L/28.5G	BEIGE GLOSS	28.5	15.75	15.75	30.00
FGNC30C2	CAN LID 107L/28.5G	BEIGE GLOSS	28.5	15.75	15.75	30.00
FGNC30C2L	CAN LID LOCK 107L/28.5G	BEIGE GLOSS	28.5	15.75	15.75	30.00
FGNC30C3	CAN LID 107L/28.5G	BEIGE GLOSS	28.5	15.75	15.75	30.00
FGNC30C3L	CAN LID LOCK 107L/28.5G	BEIGE GLOSS	28.5	15.75	15.75	30.00
FGNC30P10	PAPER LID 107L/28.5G	BEIGE GLOSS	28.5	15.75	15.75	30.00
FGNC30P10L	PAPER LID LOCK 107L/28.5G	BEIGE GLOSS	28.5	15.75	15.75	30.00
FGNC30P5	PAPER LID 107L/28.5G	BEIGE GLOSS	28.5	15.75	15.75	30.00
FGNC30P5L	PAPER LID LOCK 107L/28.5G	BEIGE GLOSS	28.5	15.75	15.75	30.00
FGNC30W10	WASTE LID 107L/28.5G	BEIGE GLOSS	28.5	15.75	15.75	30.00
FGNC30W2	WASTE LID 107L/28.5G	BEIGE GLOSS	28.5	15.75	15.75	30.00
FGNC30W3	WASTE LID 107L/28.5G	BEIGE GLOSS	28.5	15.75	15.75	30.00
FGNC30W4	WASTE LID 107L/28.5G	BEIGE GLOSS	28.5	15.75	15.75	30.00
FGNC30W4L	WASTE LID LOCK 107L/28.5G	BEIGE GLOSS	28.5	15.75	15.75	30.00
FGNC30W5	WASTE LID 107L/28.5G	BEIGE GLOSS	28.5	15.75	15.75	30.00
FGNC36C2	CAN LID 130L/34.5G	BEIGE GLOSS	34.5	15.75	15.75	36.00
FGNC36C2L	CAN LID LOCK 130L/34.5G	BEIGE GLOSS	34.5	15.75	15.75	36.00
FGNC36C3	CAN LID 130L/34.5G	BEIGE GLOSS	34.5	15.75	15.75	36.00
FGNC36C4	CAN LID 130L/34.5G	BEIGE GLOSS	34.5	15.75	15.75	36.00
FGNC36P10	PAPER LID 130L/34.5G	BEIGE GLOSS	34.5	15.75	15.75	36.00
FGNC36P10L	PAPER LID LOCK 130L/34.5G	BEIGE GLOSS	34.5	15.75	15.75	36.00
FGNC36P4L	PAPER LID LOCK 130L/34.5G	BEIGE GLOSS	34.5	15.75	15.75	36.00
FGNC36P5	PAPER LID 130L/34.5G	BEIGE GLOSS	34.5	15.75	15.75	36.00
FGNC36P5L	PAPER LID LOCK 130L/34.5G	BEIGE GLOSS	34.5	15.75	15.75	36.00
FGNC36W	WASTE LID 130L/34.5G	BEIGE GLOSS	34.5	15.75	15.75	36.00
FGNC36W10	WASTE LID 130L/34.5G	BEIGE GLOSS	34.5	15.75	15.75	36.00
FGNC36W2	WASTE LID 130L/34.5G	BEIGE GLOSS	34.5	15.75	15.75	36.00
FGNC36W3	WASTE LID 130L/34.5G	BEIGE GLOSS	34.5	15.75	15.75	36.00
FGNC36W3L	WASTE LID LOCK 130L/34.5G	BEIGE GLOSS	34.5	15.75	15.75	36.00
FGNC36W4	WASTE LID 130L/34.5G	BEIGE GLOSSv	34.5	15.75	15.75	36.00
FGNC36W4L	WASTE LID LOCK 130L/34.5G	BEIGE GLOSS	34.5	15.75	15.75	36.00
FGNC36W5	WASTE LID 130L/34.5G	BEIGE GLOSS	34.5	15.75	15.75	36.00

ASPEN

BROWN GLOSS | MATTE BRONZE | GREEN GLOSS | GREY STENNI GLOSS

SKU #	DESCRIPTION	COLOR	GALLONS	LENGTH (IN.)	WIDTH (IN.)	HEIGHT (IN.)
FGR122000PL	FLAT TOP 45L/12G	GREY STENNI GLOSS GLOSS TRIM W/ GREY PANELS	12	13.50	13.50	32.00
FGR12201PL	FLAT TOP 45L/12G	BROWN GLOSS TRIM W/ BROWN GLOSS PANELS	12	13.50	13.50	32.00
FGR12202PL	FLAT TOP 45L/12G	MAY GREEN GLOSS TRIM W/ BROWN GLOSS PANELS	12	13.50	13.50	32.00
FGR12SU202PL	ASH/TRASH 45L/12G	MAY GREEN GLOSS TRIM W/ BROWN GLOSS PANELS	12	13.50	13.50	32.00

ASPEN (cont)

BROWN GLOSS | MATTE BRONZE | GREEN GLOSS | GREY STENNI GLOSS

SKU #	DESCRIPTION	COLOR	GALLONS	LENGTH (IN.)	WIDTH (IN.)	HEIGHT (IN.)
FGR12WU202PL	ASH/TRASH WEATHER URN 45L/12G	GREEN GLOSS TRIM W/ BROWN GLOSS PANELS	12	13.50	13.50	35.00
FGR126000PL	FLAT TOP 45L/12G	TEXTURED BRONZE TRIM W/ GREY PANELS	12	13.50	13.50	32.00
FGR12SU2000PL	ASH/TRASH 45L/12G	GREY STENNI GLOSS GLOSSTRIM W/ GREY PANELS	12	13.50	13.50	32.00
FGR12SU201PL	ASH/TRASH 45L/12G	BROWN GLOSS TRIM W/ BROWN GLOSS PANELS	12	13.50	13.50	32.00
FGR12SU6000PL	ASH/TRASH 45L/12G	TEXTURED BRONZE TRIM W/ GREY PANELS	12	13.50	13.50	32.00
FGR12WU2000PL	ASH/TRASH WEATHER URN 45L/12G	GREY STENNI GLOSS GLOSSTRIM W/ GREY PANELS	12	13.50	13.50	35.00
FGR12WU201PL	ASH/TRASH WEATHER URN 45L/12G	BROWN GLOSS TRIM W/ BROWN GLOSS PANELS	12	13.50	13.50	35.00
FGR12WU6000PL	ASH/TRASH WEATHER URN 45L/12G	TEXTURED BRONZE TRIM W/ GREY PANELS	12	13.50	13.50	35.00
FGR18SU2000PL	ASH/TRASH 90L/24G	GREY STENNI GLOSS GLOSSTRIM W/ GREY PANELS	24	18.00	18.00	32.00
FGR18SU201PL	ASH/TRASH 90L/24G	BROWN GLOSS TRIM W/ BROWN GLOSS PANELS	24	18.00	18.00	32.00
FGR18SU6000PL	ASH/TRASH 90L/24G	TEXTURED BRONZE TRIM W/ GREY PANELS	24	18.00	18.00	32.00
FGR18WU2000PL	ASH/TRASH WEATHER URN 90L/24G	GREY STENNI GLOSS GLOSSTRIM W/ GREY PANELS	24	18.00	18.00	35.00
FGR18WU201PL	ASH/TRASH WEATHER URN 90L/24G	BROWN GLOSS TRIM W/ BROWN GLOSS PANELS	24	18.00	18.00	35.00
FGR18WU6000PL	ASH/TRASH WEATHER URN 90L/24G	TEXTURED BRONZE TRIM W/ GREY PANELS	24	18.00	18.00	35.00
FGR18201PL	ASH/TRASH 90L/24G	BROWN GLOSS TRIM W/ BROWN GLOSS PANELS	24	18.00	18.00	32.00
FGR18SU202PL	ASH/TRASH 90L/24G	GREEN GLOSS TRIM W/ BROWN GLOSS PANELS	24	18.00	18.00	32.00
FGR18WU202PL	ASH/TRASH WEATHER URN 90L/24G	GREEN GLOSS TRIM W/ BROWN GLOSS PANELS	24	18.00	18.00	35.00
FGR36HT2000PL	HINGED TOP 109L/29G	GREY STENNI GLOSS GLOSSTRIM W/ GREY PANELS	29	21.00	21.00	40.00
FGR36HT201PL	HINGED TOP 109L/29G	BROWN GLOSS TRIM W/ BROWN GLOSS PANELS	29	21.00	21.00	40.00
FGR36HT202PL	HINGED TOP 109L/29G	GREEN GLOSS TRIM W/ BROWN GLOSS PANELS	29	21.00	21.00	40.00
FGR36HT6000PL	HINGED TOP 109L/29G	TEXTURED BRONZE TRIM W/ GREY PANELS	29	21.00	21.00	40.00
FGR36HTWU202PL	HINGED TOP WEATHER URN 109L/29G	GREEN GLOSS TRIM W/ BROWN GLOSS PANELS	29	21.00	21.00	43.00
FGR36HTWU2000PL	HINGED TOP WEATHER URN 109L/29G	GREY STENNI GLOSS GLOSSTRIM W/ GREY PANELS	29	21.00	21.00	43.00
FGR36HTWU201PL	HINGED TOP WEATHER URN 109L/29G	BROWN GLOSS TRIM W/ BROWN GLOSS PANELS	29	21.00	21.00	43.00
FGR36HTWU6000PL	HINGED TOP WEATHER URN 109L/29G	TEXTURED BRONZE TRIM W/ GREY PANELS	29	21.00	21.00	43.00
FGR38HT2000PL	HINGED TOP 143L/38G	GREY STENNI GLOSS GLOSSTRIM W/ GREY PANELS	38	26.00	26.00	40.00
FGR38HT201PL	HINGED TOP 143L/38G	BROWN GLOSS TRIM W/ BROWN GLOSS PANELS	38	26.00	26.00	40.00
FGR38HT202PL	HINGED TOP 143L/38G	GREEN GLOSS TRIM W/ BROWN GLOSS PANELS	38	26.00	26.00	40.00
FGR38HT6000PL	HINGED TOP 143L/38G	TEXTURED BRONZE TRIM W/ GREY PANELS	38	26.00	26.00	40.00
FGR38HTWU2000PL	HINGED TOP WEATHER URN 143L/38G	GREY STENNI GLOSS GLOSS TRIM W/ GREY PANELS	38	26.00	26.00	43.00
FGR38HTWU202PL	HINGED TOP WEATHER URN 143L/38G	GREEN GLOSS TRIM W/ BROWN GLOSS PANELS	38	26.00	26.00	43.00
FGR38HTWU201PL	HINGED TOP WEATHER URN 143L/38G	BROWN GLOSS TRIM W/ BROWN GLOSS PANELS	38	26.00	26.00	43.00
FGR38SD201PL	SIDE DOOR WITH CAM LOCK 143L/38G	BROWN GLOSS TRIM W/ BROWN GLOSS PANELS	38	26.00	26.00	40.00
FGR40201	SAND URN	BROWN GLOSS TRIM W/ BROWN GLOSS PANELS	N/A	10.00	10.00	24.00
FGR40WU2000	SAND URN WITH WEATHER SHIELD	GREY STENNI GLOSS GLOSSTRIM W/ GREY PANELS	N/A	10.00	10.00	27.00
FGR402000	SAND URN	GREY STENNI GLOSS GLOSSTRIM W/ GREY PANELS	N/A	10.00	10.00	24.00
FGR40WU201	SAND URN WITH WEATHER SHIELD	BROWN GLOSS TRIM W/ BROWN GLOSS PANELS	N/A	10.00	10.00	27.00
FGR40202	SAND URN	GREEN GLOSS TRIM W/ BROWN GLOSS PANELS	N/A	10.00	10.00	24.00
FGR406000	SAND URN	TEXTURED BRONZE TRIM W/ GREY PANELS	N/A	10.00	10.00	24.00
FGR40WU202	SAND URN WITH WEATHER SHIELD	GREEN GLOSS TRIM W/ BROWN GLOSS PANELS	N/A	10.00	10.00	27.00
FGR40WU6000	SAND URN WITH WEATHER SHIELD	TEXTURED BRONZE TRIM W/ GREY PANELS	N/A	10.00	10.00	27.00
FGR41201PL	ASH/TRASH 9L/2.5G	BROWN GLOSS TRIM W/ BROWN GLOSS PANELS	2.5	10.00	10.00	24.00
FGR41202PL	ASH/TRASH 9L/2.5G	GREEN GLOSS TRIM W/ BROWN GLOSS PANELS	2.5	10.00	10.00	24.00
FGR41WU2000PL	ASH/TR WEATHER URN 9L/2.5G	GREY STENNI GLOSS GLOSSTRIM W/ GREY PANELS	2.5	10.00	10.00	27.00
FGR412000PL	ASH/TRASH 9L/2.5G	GREY STENNI GLOSS GLOSSTRIM W/ GREY PANELS	2.5	10.00	10.00	24.00
FGR416000PL	ASH/TRASH 9L/2.5G	TEXTURED BRONZE TRIM W/ GREY PANELS	2.5	10.00	10.00	24.00
FGR41WU6000PL	ASH/TRASH WEATHER URN 9L/2.5G	TEXTURED BRONZE TRIM W/ GREY PANELS	2.5	10.00	10.00	27.00
FGR41WU201PL	ASH/TRASH WEATHER URN 9L/2.5G	BROWN GLOSS TRIM W/ BROWN GLOSS PANELS	2.5	10.00	10.00	27.00
FGR41WU202PL	ASH/TRASH WEATHER URN 9L/2.5G	GREEN GLOSS TRIM W/ BROWN GLOSS PANELS	2.5	10.00	10.00	27.00
FGR48HT2000PL	HINGED TOP 181L/48G	GREY STENNI GLOSS GLOSSTRIM W/ GREY PANELS	48	26.00	26.00	40.00
FGR48HT201PL	HINGED TOP 181L/48G	BROWN GLOSS TRIM W/ BROWN GLOSS PANELS	48	26.00	26.00	40.00

ASPEN (cont)

BROWN GLOSS | MATTE BRONZE | GREEN GLOSS | GREY STENNI GLOSS

SKU #	DESCRIPTION	COLOR	GALLONS	LENGTH (IN.)	WIDTH (IN.)	HEIGHT (IN.)
FGR48HTWU202PL	HINGED TOP WEATHER URN 181L/48G	GREEN GLOSS TRIM W/ BROWN GLOSS PANELS	48	26.00	26.00	43.00
FGR48HT202PL	HINGED TOP 181L/48G	GREEN GLOSS TRIM W/ BROWN GLOSS PANELS	48	26.00	26.00	40.00
FGR48HT6000PL	HINGED TOP 181L/48G	TEXTURED BRONZE TRIM W/ GREY PANELS	48	26.00	26.00	40.00
FGR48HTWU2000PL	HINGED TOP WEATHER URN 181L/48G	GREY STENNI GLOSS GLOSSTRIM W/ GREY PANELS	48	26.00	26.00	43.00
FGR48HTWU201PL	HINGED TOP WEATHER URN 181L/48G	BROWN GLOSS TRIM W/ BROWN GLOSS PANELS	48	26.00	26.00	43.00
FGR48HTWU6000PL	HINGED TOP WEATHER URN 181L/48G	TEXTURED BRONZE TRIM W/ GREY PANELS	48	26.00	26.00	43.00

DIMENSION

ANTHRACITE METALLIC | BLACK GLOSS

SKU #	DESCRIPTION	COLOR	GALLONS	LENGTH (IN.)	WIDTH (IN.)	HEIGHT (IN.)
FGR12500PL	FLAT TOP 45L/12G	BLACK GLOSS W/ ANTHRACITE METALLIC PERFORATED PANELS	12	13.50	13.50	32.00
FGR12SBKPL	FLAT TOP 45L/12G	BLACK GLOSS	12	13.50	13.50	32.00
FGR12SUSBKPL	ASH/TRASH 45L/12G	BLACK GLOSS	12	13.50	13.50	32.00
FGR12WU500PL	ASH/TRASH WEATHER URN 45L/12G	BLACK GLOSS W/ ANTHRACITE METALLIC PERFORATED PANELS	12	13.50	13.50	35.00
FGR12WUSBKPL	ASH/TRASH WEATHER URN 45L/12G	BLACK GLOSS	12	13.50	13.50	35.00
FGR18WU500PL	ASH/TRASH WEATHER URN 90L/24G	BLACK GLOSS W/ ANTHRACITE METALLIC PERFORATED PANELS	24	18.00	18.00	35.00
FGR18500PL	FLAT TOP 90L/24G	BLACK GLOSS W/ ANTHRACITE METALLIC PERFORATED PANELS	24	18.00	18.00	32.00
FGR36HTWUSBKPL	HINGED TOP WEATHER URN 109L/29G	BLACK GLOSS	29	21.00	21.00	43.00
FGR36HTWU500PL	HINGED TOP WEATHER URN 109L/29G	BLACK GLOSS W/ ANTHRACITE METALLIC PERFORATED PANELS	29	21.00	21.00	43.00
FGR36HT500PL	HINGED TOP 109L/29G	BLACK GLOSS W/ ANTHRACITE METALLIC PERFORATED PANELS	29	21.00	21.00	40.00
FGR36HTSBKPL	HINGED TOP 109L/29G	BLACK GLOSS	29	21.00	21.00	40.00
FGR38HT500PL	HINGED TOP 143L/38G	BLACK GLOSS W/ ANTHRACITE METALLIC PERFORATED PANELS	38	26.00	26.00	40.00
FGR38HTSBKPL	HINGED TOP 143L/38G	BLACK GLOSS	38	26.00	26.00	40.00
FGR38HTWU500PL	HINGED TOP WEATHER URN 143L/38G	BLACK GLOSS W/ ANTHRACITE METALLIC PERFORATED PANELS	38	26.00	26.00	43.00
FGR38HTWUSBKPL	HINGED TOP WEATHER URN 143L/38G	BLACK GLOSS	38	26.00	26.00	43.00
FGR40WU500	SAND URN WITH WEATHER SHIELD	BLACK GLOSS W/ ANTHRACITE METALLIC PERFORATED PANELS	N/A	10.00	10.00	27.00
FGR40SBK	SAND URN	BLACK GLOSS	N/A	10.00	10.00	24.00
FGR40WUSBK	SAND URN WITH WEATHER SHIELD	BLACK GLOSS	N/A	10.00	10.00	27.00
FGR41SBKPL	ASH/TRASH 9L/2.5G	BLACK GLOSS	2.5	10.00	10.00	24.00
FGR41WU500PL	ASH/TRASH WEATHER URN 9L/2.5G	BLACK GLOSS W/ ANTHRACITE METALLIC PERFORATED PANELS	2.5	10.00	10.00	27.00
FGR41WUSBKPL	ASH/TRASH WEATHER URN 9L/2.5G	BLACK GLOSS	2.5	10.00	10.00	27.00
FGR48HTWU500PL	HINGED TOP WEATHER URN 181L/48G	BLACK GLOSS W/ ANTHRACITE METALLIC PERFORATED PANELS	48	26.00	26.00	43.00
FGR48HTWUSBKPL	HINGED TOP WEATHER URN 181L/48G	BLACK GLOSS	48	26.00	26.00	43.00
FGR48HTSBKPL	HINGED TOP 181L/48G	BLACK GLOSS	48	26.00	26.00	40.00
FGR48HT500PL	HINGED TOP 181L/48G	BLACK GLOSS W/ ANTHRACITE METALLIC PERFORATED PANELS	48	26.00	26.00	40.00

REGENT

GREEN GLOSS

SKU #	DESCRIPTION	COLOR	GALLONS	LENGTH (IN.)	WIDTH (IN.)	HEIGHT (IN.)
FGR34HT50PLEGN	HINGED TOP 109L/29G	GREEN GLOSS	29	21.00	21.00	37.00
FGR34HTWU50PLEGN	HINGED TOP WEATHER URN 109L/29G	GREEN GLOSS	29	21.00	21.00	40.00
FGR1450PLEGN	FLAT TOP 45L/12G	GREEN GLOSS	12	13.50	13.50	32.00
FGR14SU50PLEGN	ASH/TRASH 45L/12G	GREEN GLOSS	12	13.50	13.50	32.00
FGR14WU50PLEGN	ASH/TRASH WEATHER SHIELD 45L/12G	GREEN	12	–	–	–

ARCHITEK®

MATTE BRONZE · BLACK GLOSS

SKU #	DESCRIPTION	COLOR	GALLONS	LENGTH (IN.)	WIDTH (IN.)	HEIGHT (IN.)
FGA17ABZPL	FLAT TOP 64L/17G	MATTE BRONZE	17	18.00	18.00	34.00
FGA17BKPL	FLAT TOP 64L/17G	BLACK	17	18.00	18.00	34.00
FGA17SUABZPL	FLAT TOP WITH SAND URN 64L/17G	MATTE BRONZE	17	18.00	18.00	34.00
FGA17SUBKPL	FLAT TOP WITH SAND URN 64L/17G	BLACK	17	18.00	18.00	34.00
FGA38ABZPL	CANOPY TOP 143L/38G	MATTE BRONZE	38	24.00	24.00	43.00
FGA38BKPL	CANOPY TOP 143L/38G	BLACK	38	24.00	24.00	43.00
FGA38SUABZPL	CANOPY TOP WITH SAND URN 143L/38G	MATTE BRONZE	38	24.00	24.00	43.00
FGA38SUBKPL	CANOPY TOP WITH SAND URN 143L/38G	BLACK	38	24.00	24.00	43.00
FGA38TABZPL	OPEN TOP 143L/38G	MATTE BRONZE	38	24.00	24.00	35.00
FGA38TBKPL	OPEN TOP 143L/38G	BLACK	38	24.00	24.00	35.00
FGA50SUBK	SAND URN	BLACK	N/A	12.00	12.00	24.00
FGA50SUABZ	SAND URN	MATTE BRONZE	N/A	12.00	12.00	24.00
FGA51SUABZPL	FLAT TOP WITH SAND URN 18L/5G	MATTE BRONZE	5	12.00	12.00	24.00
FGA51SUBKPL	FLAT TOP WITH SAND URN 18L/5G	BLACK	5	12.00	12.00	24.00

TOWNE

BLACK GLOSS · CEDAR · GREEN GLOSS

DOME TOPS

ALMOND GLOSS · BLACK GLOSS · BROWN GLOSS · GREEN GLOSS · GREY STENNI GLOSS · RED GLOSS

SKU #	DESCRIPTION	COLOR	GALLONS	LENGTH (IN.)	WIDTH (IN.)	HEIGHT (IN.)
FGH1NBK	POLE WITH WALL MOUNT 37L/10G	BLACK GLOSS	10	11.50	11.50	24.00
FGH1NEGN	POLE WITH WALL MOUNT 37L/10G	GREEN GLOSS	10	11.50	11.50	24.00
FGH1NEGNWITHLID	POLE WITH WALL MOUNT 37L/10G	GREEN GLOSS	10	11.50	11.50	24.00
FGH9NBK	POLE WITH WALL MOUNT 83L/22G	BLACK GLOSS	22	15.00	15.00	30.00
FGH9NEGN	POLE WITH WALL MOUNT 83L/22G	GREEN GLOSS	22	15.00	15.00	30.00
FGH3BK	FREE STANDING 128L/34G	BLACK GLOSS	34	18.00	18.00	36.00
FGH3EGN	FREE STANDING 128L/34G	GREEN GLOSS	34	18.00	18.00	36.00
FGH12IGC	POST MOUNT WITH GROUND POST 128L/34G	CEDAR	34	18.00	18.00	36.00
FGH12SMC	POST MOUNT WITH SURFACE POST 128L/34G	CEDAR	34	18.00	18.00	36.00
FGH55C	FREE STANDING 238L/63G	CEDAR	63	24.00	24.00	36.00
FGH55EBK	FREE STANDING 238L/63G	BLACK GLOSS	63	24.00	24.00	36.00
FGH55EEGN	FREE STANDING 238L/63G	GREEN GLOSS	63	24.00	24.00	36.00
DOME TOPS						
FG1855EGN	DOME TOP FITS FGMT32, FGH55, FGSBR52	GREEN GLOSS	N/A	24.50	24.50	11.00
FG1855RD	DOME TOP FITS FGMT32, FGH55, FGSBR53	RED GLOSS	N/A	24.50	24.50	11.00
FG1855BK	DOME TOP FITS FGMT32, FGH55, FGSBR54	BLACK GLOSS	N/A	24.50	24.50	11.00
FG2030RD	DOME TOP FITS FGMT22, FGH12	RED GLOSS	N/A	20.00	20.00	9.50
FG2030BK	DOME TOP FITS FGMT22, FGH13	BLACK GLOSS	N/A	20.00	20.00	9.50
FG2030BR	DOME TOP BROWN FITS FGMT22, FGH14	BROWN GLOSS	N/A	20.00	20.00	9.50
FG2030EGN	DOME TOP FITS FGMT22, FGH15	GREEN GLOSS	N/A	20.00	20.00	9.50
FGBBT1529BK	DOME TOP FITS FGWB44, FGWB2029	BLACK GLOSS	N/A	16.00	16.00	6.00
FGBBT1529AL	DOME TOP FITS FGWB44, FGWB2030	ALMOND GLOSS	N/A	16.00	16.00	6.00
FGBBT1529GR	DOME TOP FITS FGWB44, FGWB2031	GREY STENNI GLOSS	N/A	16.00	16.00	6.00

AVENUE

BLACK GLOSS

SKU #	DESCRIPTION	COLOR	GALLONS	LENGTH (IN.)	WIDTH (IN.)	HEIGHT (IN.)
FGMHR36PLBK	RECTANGLE OPEN TOP 132L/35G	BLACK GLOSS	35	29.50	16.00	32.50
FGMHSQ18PLBK	SQUARE OPEN TOP 60L/16G	BLACK GLOSS	16	16.00	16.00	32.50
FGMH24PLBK	ROUND OPEN TOP 87L/23G	BLACK GLOSS	23	20.50	20.50	33.50
FGMH32PLBK	ROUND OPEN TOP 121L/32G	BLACK GLOSS	32	22.50	22.50	31.00
FGMH46PLBK	ROUND OPEN TOP 140L/37G	BLACK GLOSS	37	24.50	24.50	33.50

NOTES



BLACK RED	RED ORANGE	PASTEL YELLOW	BOTTLE GREEN	MINT GREEN	SKY BLUE
WINE RED	PEARL ORANGE	SAFFRON YELLOW	BLACK OLIVE	TURQUOISE GREEN	TRAFFIC BLUE
OXIDE RED	PEARL COPPER	LUMINOUS BRIGHT ORANGE	GREY OLIVE	OPAL GREEN	SIGNAL BLUE
PURPLE RED	COPPER BROWN	TRAFFIC YELLOW	FIR GREEN	PEARL OPAL GREEN	GENTIAN BLUE
PEARL RUBY RED	ORANGE BROWN	CANOLA YELLOW	CHROME GREEN	PINE GREEN	BRILLIANT BLUE
BROWN RED	SIGNAL ORANGE	ZINC YELLOW	PEARL GREEN	MOSS GREEN	PIGEON BLUE
RUBY RED	SALMON ORANGE	LUMINOUS YELLOW	LEAF GREEN	BLUE GREEN	DISTANT BLUE
TOMATO RED	TRAFFIC ORANGE	SULFUR YELLOW	EMERALD GREEN	BLACK GREEN	SAPPHIRE BLUE
SIGNAL RED	PURE ORANGE	LEMON YELLOW	GRASS GREEN	OCEAN BLUE	COBALT BLUE
CARMINE RED	LUMINOUS ORANGE	BROOM YELLOW	MAY GREEN	GREEN BLUE	STEEL BLUE
FLAME RED	BRIGHT RED ORANGE	GOLDEN YELLOW	FERN GREEN	AZURE BLUE	GREY BLUE
CORAL RED	PASTEL ORANGE	HONEY YELLOW	RESEDA GREEN	CAPRI BLUE	BLACK BLUE
ORIENT RED	DEEP ORANGE	OCHRE YELLOW	PALE GREEN	PEARL GENTIAN BLUE	PEARL NIGHT BLUE
RASPBERRY RED	YELLOW ORANGE	CURRY	PASTEL GREEN	WATER BLUE	NIGHT BLUE
STRAWBERRY RED	DAFFODIL YELLOW	OLIVE YELLOW	YELLOW GREEN	MINT TURQUOISE	ULTRAMARINE BLUE
TRAFFIC RED	MAIZE YELLOW	REED GREEN	LUMINOUS GREEN	PASTEL TURQUOISE	VIOLET BLUE
PURE RED	SUN YELLOW	OLIVE GREEN	PURE GREEN	LIGHT GREEN	PEARL BLACKBERRY
LUMINOUS RED	DAHLIA YELLOW	YELLOW OLIVE	TRAFFIC GREEN	TURQUOISE BLUE	PEARL VIOLET
LUMINOUS BRIGHT RED	MELON YELLOW	OLIVE DRAB	SIGNAL GREEN	PASTEL BLUE	BLUE LILAC
VERMILLION	SIGNAL YELLOW	BROWN GREEN	PATINA GREEN	LIGHT BLUE	PASTEL VIOLET

RED LILAC	SEPIA BROWN	YELLOW GREY	JET BLACK + MATTE & METALLIC	SQUIRREL GREY	ALMOND
SIGNAL VIOLET	NUT BROWN	PEARL BEIGE	BLACK BROWN	WINDOW GREY	SAND
TRAFFIC PURPLE	FAWN BROWN	OLIVE GREY	SIGNAL BLACK	TELEGREY 1	MATTE BRONZE
CLARET VIOLET	OLIVE BROWN	CEMENT GREY	GRAPHITE BLACK	TELEGREY 2	BRONZE METALLIC
PURPLE VIOLET	PALE BROWN	MOSS GREY	ANTHRACITE GREY	TRAFFIC GREY A	TEXTURED BRONZE
RED VIOLET	BEIGE BROWN	BEIGE GREY	GRANITE GREY	SIGNAL GREY	TEXTURED BROWN
TELEMAGENTA	CLAY BROWN	QUARTZ GREY	GRAPHITE GREY	WHITE ALUMINUM	BROWN
HEATHER VIOLET	OCHRE BROWN				DARK CHERRY METALLIC
LIGHT PINK	BROWN BEIGE				CRIMSON
ANTIQUE PINK	SAND YELLOW	PEBBLE GREY	TRAFFIC GREY B	TELEGREY 4	RED
ROSE	BEIGE	SILK GREY	GREEN GREY	PLATINUM GREY	GREEN
SALMON PINK	IVORY	AGATE GREY	TARPAULIN GREY	LIGHT GREY + METALLIC	BLACK
BEIGE RED	LIGHT IVORY	STONE GREY	MOUSE GREY	PAPYRUS WHITE	TEXTURED BLACK
PEARL PINK	OYSTER WHITE	PEARL MOUSE GREY METALLIC	GREY ALUMINUM	GREY WHITE	HAMMERTONE GREY
SIGNAL BROWN	CREAM	BROWN GREY	DUSTY GREY	SIGNAL WHITE	GREY STENNI + METALLIC
RED BROWN	GREEN BEIGE	CONCRETE GREY	BASALT GREY	TRAFFIC WHITE	ANTHRACITE METALLIC
CHESTNUT BROWN	GREEN BROWN	UMBRA GREY + METALLIC	SLATE GREY	PURE WHITE	STARDUST SILVER METALLIC
MAHAGONY BROWN	PEARL GOLD	GREY BROWN	IRON GREY	SKY WHITE + METALLIC	TEXTURED GREY
TERRA BROWN	KHAKI GREY	BLACK GREY	BLUE GREY	DESERT PEARL METALLIC	LIGHT BLUE
CHOCOLATE BROWN	GREY BEIGE	TRAFFIC BLACK	SILVER GREY	BEIGE	

Rubbermaid® Commercial Products

230+ COLORS.
1 PERFECT FOR YOU.

Rubbermaid®
Commercial Products

151289.0616 | RCP1026
©2016 Rubbermaid Commercial Products LLC
8900 Northpointe Executive Drive, Huntersville, NC 28078

HALF ROUNDS

FLAT TOP

The Half Rounds Series decorative refuse container fits flush against walls to conserve space. The sleek and functional design of this receptacle blends seamlessly with upscale and modern indoor facilities.

FEATURES AND BENEFITS:

FEATURES

- Heavy-gauge, fire-safe steel
- Leak-proof galvanized or rigid plastic liner included to contain liquids and keep the surrounding area cleaner
- Adjustable leg levelers create stability on uneven surfaces
- Shipped fully assembled

ADA COMPLIANT

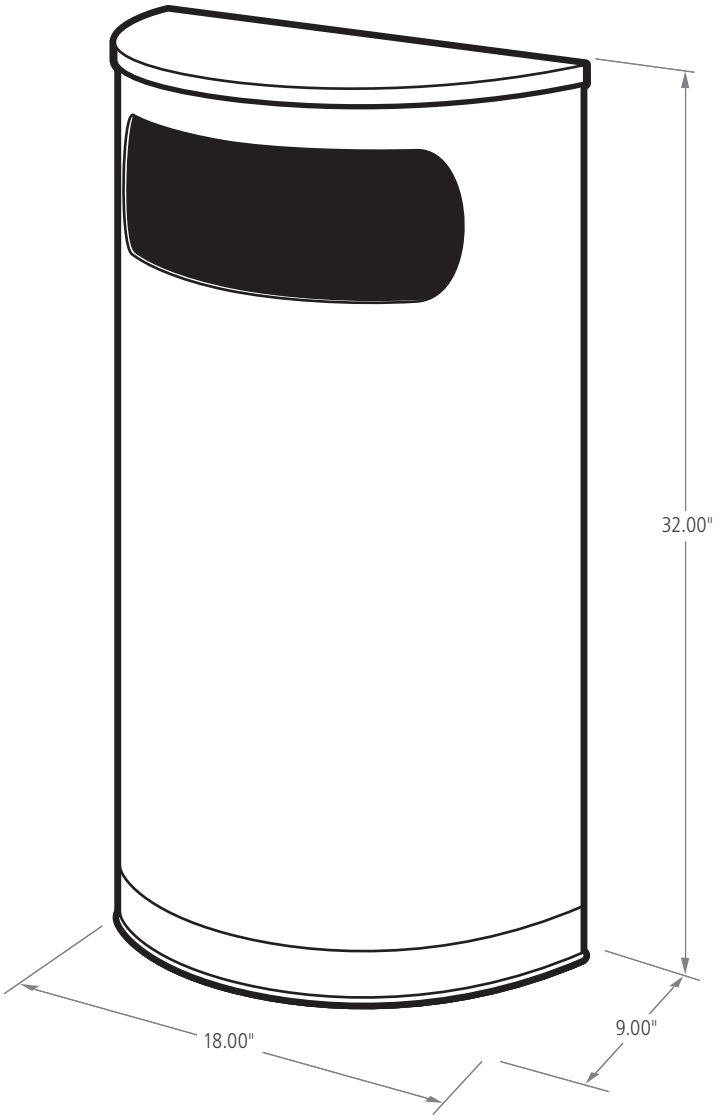

GALLONS	LENGTH (in.)	WIDTH (in.)	HEIGHT (in.)
9G	18.00	9.00	32.00

HALF ROUNDS

FLAT TOP

STANDARD COLOR OPTIONS



SKU #	DESCRIPTION	LINER	COLOR	GALLONS	WEIGHT (lbs.)	LENGTH (in.)	WIDTH (in.)	HEIGHT (in.)
FGSO8SSSPL	HALF ROUND 34L/9G	METAL	STAINLESS STEEL	9	26.00	18.00	9.00	32.00
FGSO820PLBK	HALF ROUND 34L/9G	PLASTIC	BLACK GLOSS WITH CHROME TRIM	9	26.00	18.00	9.00	32.00
FGSO810PLBK	HALF ROUND 34L/9G	METAL/PLASTIC	BLACK GLOSS WITH BRASS TRIM	9	26.00	18.00	9.00	32.00
FGSO810PLCR	HALF ROUND 34L/9G	METAL/PLASTIC	CRIMSON GLOSS WITH BRASS TRIM	9	26.00	18.00	9.00	32.00
FGSO820PLANT	HALF ROUND 34L/9G	PLASTIC	ANTHRACITE METALLIC WITH CHROME TRIM	9	26.00	18.00	9.00	32.00
FGSO8SBSPL	HALF ROUND 34L/9G	PLASTIC	SATIN BRASS STAINLESS STEEL	9	26.00	18.00	9.00	32.00

BUILD YOUR OWN ▶RUBBERMAIDCOMMERCIAL.COM/CUSTOMIZE

©2016 Rubbermaid Commercial Products LLC
8900 Northpointe Executive Park Drive, Huntersville, NC 28078

HALF ROUNDS

OPEN TOP

The Half Rounds Series decorative refuse container fits flush against walls to conserve space. The sleek and functional design of this receptacle blends seamlessly with upscale and modern indoor facilities.

FEATURES AND BENEFITS:

FEATURES

- The Open Top style has a large opening for easy waste disposal
- Heavy-gauge, fire-safe steel
- Leak-proof galvanized or rigid plastic liner included to contain liquids and keep the surrounding area cleaner
- Adjustable leg levelers create stability on uneven surfaces
- Shipped fully assembled

ADA COMPLIANT

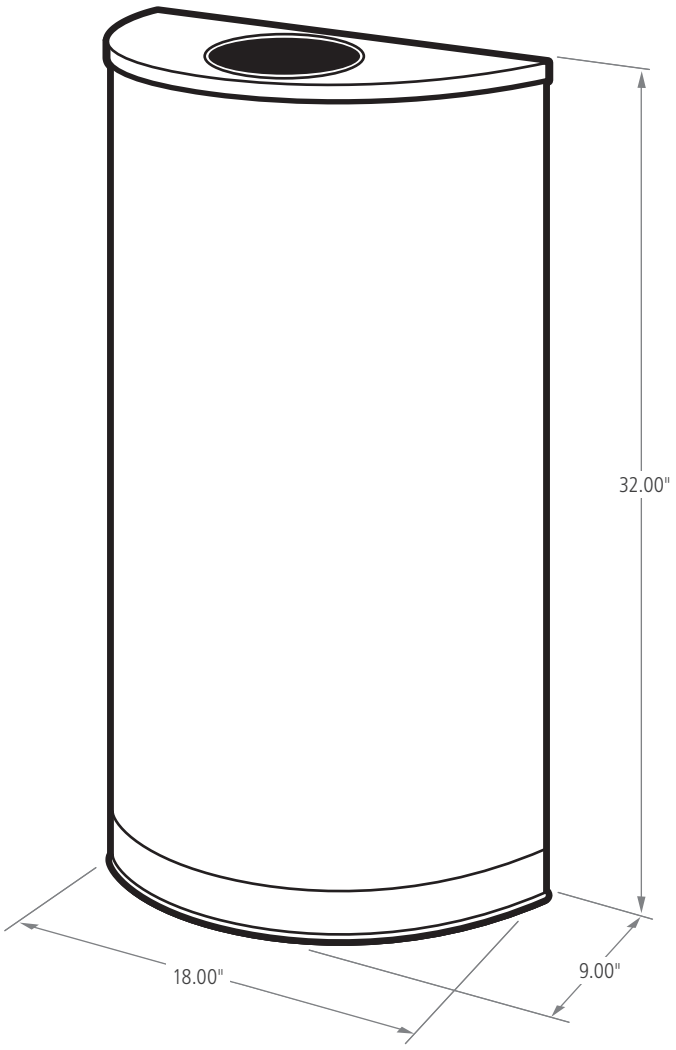

GALLONS	LENGTH (in.)	WIDTH (in.)	HEIGHT (in.)
12G	18.00	9.00	32.00

HALF ROUNDS

OPEN TOP

STANDARD COLOR OPTIONS



SKU #	DESCRIPTION	LINER	COLOR	GALLONS	WEIGHT (lbs.)	LENGTH (in.)	WIDTH (in.)	HEIGHT (in.)
FGSH12EPLSM	HALF ROUND OPEN TOP 45L/12G	PLASTIC	SILVER METALLIC	12	26.00	18.00	9.00	32.00
FGSH12EPLTBK	HALF ROUND OPEN TOP 45L/12G	PLASTIC	TEXTURED BLACK	12	26.00	18.00	9.00	32.00
FGSH12EPLDP	HALF ROUND OPEN TOP 45L/12G	PLASTIC	DESERT PEARL METALLIC	12	26.00	18.00	9.00	32.00
FGSH12SSPL	HALF ROUND OPEN TOP 45L/12G	PLASTIC	STAINLESS STEEL	12	26.00	18.00	9.00	32.00
FGSO1220PLBK	HALF ROUND OPEN TOP 45L/12G	PLASTIC	TEXTURED BLACK WITH CHROME TRIM	12	26.00	18.00	9.00	32.00
FGSO12SSSPL	HALF ROUND OPEN TOP 45L/12G	PLASTIC	STAINLESS STEEL	12	26.00	18.00	9.00	32.00

BUILD YOUR OWN ▶RUBBERMAIDCOMMERCIAL.COM/CUSTOMIZE

©2016 Rubbermaid Commercial Products LLC
8900 Northpointe Executive Park Drive, Huntersville, NC 28078



12 gal Indoor Half Round Decorative Trash Can

- 12-gal. capacity
- 9-in. dia. opening
- Includes leak-proof rigid plastic liner
- Body lifts off from liner for easy emptying
- Conserves space by sitting flush to wall
- Overall Dimensions: 18-in. W x 32-in. H

Silhouette Indoor Receptacle, 9" L x 18" W x 32" H, 12 gallon, half round, open top, retainer band with leak proof plastic rigid liner, textured black

Rubbermaid FGSH12EPLT Specifications

Manufacturer	Rubbermaid
Application	Indoor
Capacity (gallons)	12
Exterior Construction	Metal
Color	TBD
Shape	Half Round
Top	Open

For Use With	Liner
Height (in)	32
Width (in)	18
Length (in)	9
Product Type	Cleaning & Janitorial
Product	Trash Can
Weight	25.00

3043C

WASTE CONTAINER, DROP IN TOP, 15 GALLON SUITABLE FOR RESTROOMS



RUBBERMAID FGAOT15BKPL SPECS	
Height	30 Inches
Diameter	15 Inches
ADA Compliant	Yes
Capacity	15 Gallons
Color	Black
Lid Type	Open
Liner Material	Rigid Plastic
Made in America	Yes
Material	Steel
Shape	Round

SOURCE: https://www.webstaurantstore.com/rubbermaid-fgaot15bkpl-crowne-textured-black-round-open-top-steel-waste-receptacle-with-rigid-plastic-liner-15-gallon/690FGAOT15BK.html

3043e

WASTE CONTAINER-DROP IN TOP-25 GALLONS-STAINLESS STEEL



RUBBERMAID FGS3SSTSSPL SPECS	
Height	35 1/2 Inches
Diameter	18 Inches
Opening Diameter	5 Inches
ADA Compliant	Yes
Capacity	25 Gallons
Color	Silver
Lid Type	Open
Liner Material	Rigid Plastic
Made in America	Yes
Material	Stainless Steel
Shape	Round
Type	Trash Cans

SOURCE: https://www.webstaurantstore.com/rubbermaid-fgs3sstsspl-classics-round-stainless-steel-drop-top-waste-receptacle-with-stainless-steel-lid-levelers-and-rigid-plastic-liner-25-gallon/690FGS3SSTSS.html

3045

56 GALLON SQUARE LARGE TOP OPENING WASTECONTAINER WITH HOOD





RUBBERMAID FG256B00BRN SPECS	
Width	25 1/2 Inches
Depth	22 3/4 Inches
Height	31 1/8 Inches
Capacity	56 Gallons
Color	Brown
Lid Type	No Lid
Material	Heavy Duty Plastic
Shape	Square
Style	Stationary

SOURCE: https://www.webstaurantstore.com/rubbermaid-fg256b00brn-glutton-56-gallon-brown-trash-can/690256B%20%20%20%20%20BR.html

BRUTE® CONTAINERS

BRUTE® containers are guaranteed to never fade, warp, crack, or crush, with a proprietary design constructed with the highest quality material.

Features and Benefits:

- Venting channels make removing liners up to 50% easier, improving productivity and reducing the risk of injury
- Commercial-grade construction guaranteed to never fade, warp, crack, or crush
- Bag cinches secure liners, allowing for knot-free liner changes. Tested to 200,000 cycles
- Contoured base handles improve grip and ergonomics, reducing strain and improving efficiency
- Rim with rib-strengthened design increases strength and resists crushing
- Rounded handles make lifting and moving easier
- Reinforced base is specifically engineered to be dragged over rough surfaces in tough environments

NSF
2 & 21 Compliant

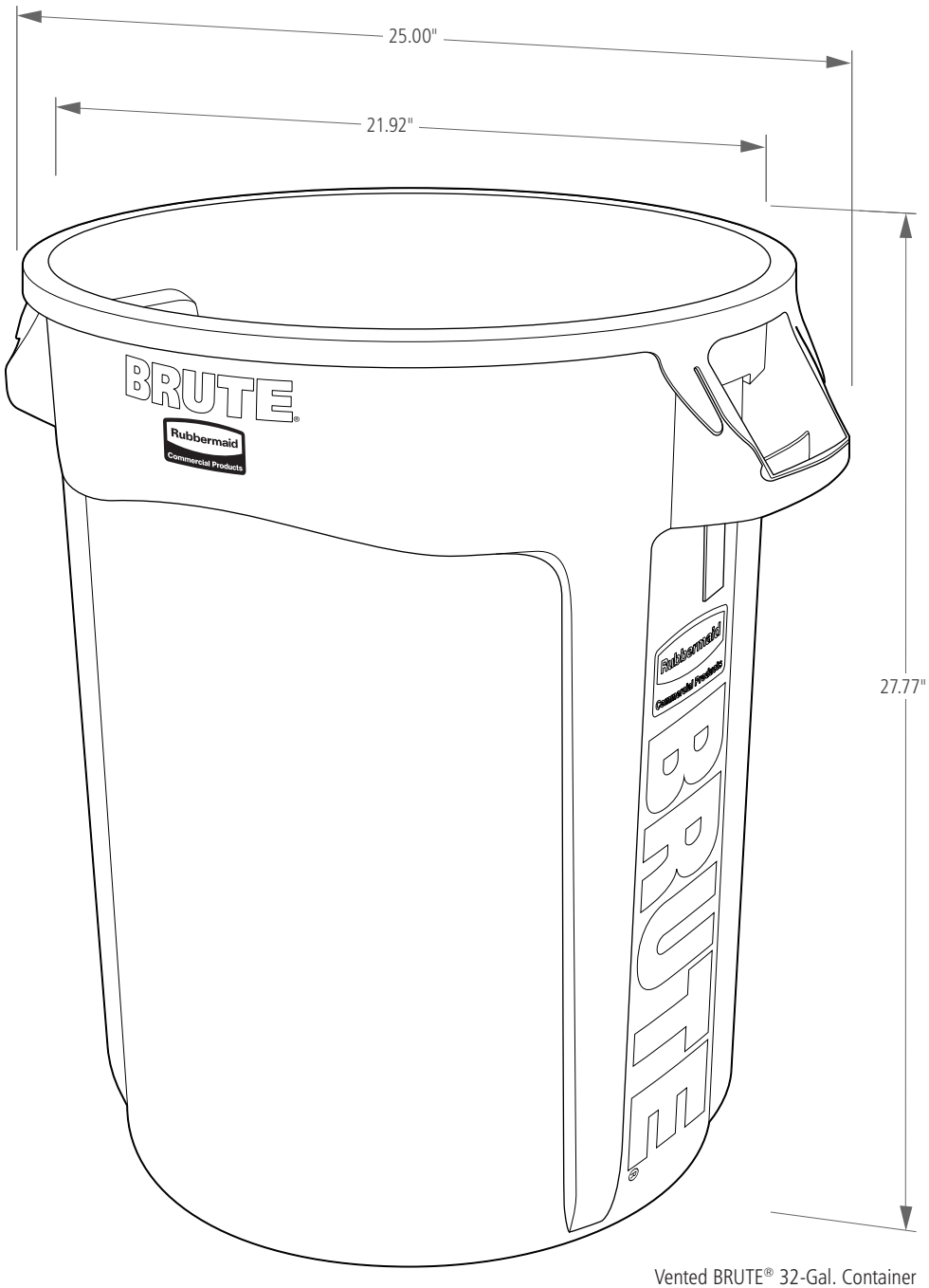

Vented BRUTE® 32-Gal. Container

BRUTE® CONTAINERS

SKU #	DESCRIPTION	COLOR	CAPACITY GAL	HEIGHT IN	DIAMETER IN	DIAMETER WITH HANDLE IN	PACK SIZE
FG261000GRAY	BRUTE® 10 GALLON CONTAINER	GRAY	10G	17.13	15.63	18.00	6
FG261000WHT	BRUTE® 10 GALLON CONTAINER	WHITE	10G	17.13	15.63	18.00	6
FG261000RED	BRUTE® 10 GALLON CONTAINER	RED	10G	17.13	15.63	18.00	6
FG261000YEL	BRUTE® 10 GALLON CONTAINER	YELLOW	10G	17.13	15.63	18.00	6
1779699	BRUTE® 10 GALLON CONTAINER	BLUE	10G	17.13	15.63	18.00	6
FG261000DGRN	BRUTE® 10 GALLON CONTAINER	DARK GREEN	10G	17.13	15.63	18.00	6
1926827	BRUTE® 10 GALLON CONTAINER	BLACK	10G	17.13	15.63	18.00	6
FG262000GRAY	BRUTE® 20 GALLON CONTAINER	GRAY	20G	22.91	19.38	22.50	6
FG262000WHT	BRUTE® 20 GALLON CONTAINER	WHITE	20G	22.91	19.38	22.50	6
FG262000RED	BRUTE® 20 GALLON CONTAINER	RED	20G	22.91	19.38	22.50	6
FG262000YEL	BRUTE® 20 GALLON CONTAINER	YELLOW	20G	22.91	19.38	22.50	6
FG262000BLUE	BRUTE® 20 GALLON CONTAINER	BLUE	20G	22.91	19.38	22.50	6
FG262000DGRN	BRUTE® 20 GALLON CONTAINER	DARK GREEN	20G	22.91	19.38	22.50	6
1779734	BRUTE® 20 GALLON CONTAINER	BLACK	20G	22.91	19.38	22.50	6
FG262073BLUE	BRUTE® 20 GALLON RECYCLING CONTAINER	BLUE	20G	22.91	19.38	22.50	6
1926828	BRUTE® 20 GALLON RECYCLING CONTAINER	DARK GREEN	20G	22.91	19.38	22.50	6
FG263200GRAY	BRUTE® 32 GALLON CONTAINER	GRAY	32G	27.77	21.92	25.00	6
FG263200WHT	BRUTE® 32 GALLON CONTAINER	WHITE	32G	27.77	21.92	25.00	6
FG263200RED	BRUTE® 32 GALLON CONTAINER	RED	32G	27.77	21.92	25.00	6
FG263200YEL	BRUTE® 32 GALLON CONTAINER	YELLOW	32G	27.77	21.92	25.00	6
FG263200BLUE	BRUTE® 32 GALLON CONTAINER	BLUE	32G	27.77	21.92	25.00	6
FG263200DGRN	BRUTE® 32 GALLON CONTAINER	DARK GREEN	32G	27.77	21.92	25.00	6
1867531	BRUTE® 32 GALLON CONTAINER	BLACK	32G	27.77	21.92	25.00	6
FG263273BLUE	BRUTE® 32 GALLON RECYCLING CONTAINER	BLUE	32G	27.77	21.92	25.00	6
1788472	BRUTE® 32 GALLON RECYCLING CONTAINER	DARK GREEN	32G	27.77	21.92	25.00	6
FG264360GRAY	BRUTE® 44 GALLON CONTAINER	GRAY	44G	31.50	24.00	27.75	4
1779740	BRUTE® 44 GALLON CONTAINER	WHITE	44G	31.50	24.00	27.75	4
FG264360RED	BRUTE® 44 GALLON CONTAINER	RED	44G	31.50	24.00	27.75	4
FG264360YEL	BRUTE® 44 GALLON CONTAINER	YELLOW	44G	31.50	24.00	27.75	4
FG264360BLUE	BRUTE® 44 GALLON CONTAINER	BLUE	44G	31.50	24.00	27.75	4
1779741	BRUTE® 44 GALLON CONTAINER	DARK GREEN	44G	31.50	24.00	27.75	4
FG264360BLA	BRUTE® 44 GALLON CONTAINER	BLACK	44G	31.50	24.00	27.75	4
FG264307BLUE	BRUTE® 44 GALLON RECYCLING CONTAINER	BLUE	44G	31.50	24.00	27.75	4
1926829	BRUTE® 44 GALLON RECYCLING CONTAINER	DARK GREEN	44G	31.50	24.00	27.75	4
FG265500GRAY	BRUTE® 55 GALLON CONTAINER	GRAY	55G	33.19	26.38	30.75	3
FG265500WHT	BRUTE® 55 GALLON CONTAINER	WHITE	55G	33.19	26.38	30.75	3
FG265500RED	BRUTE® 55 GALLON CONTAINER	RED	55G	33.19	26.38	30.75	3
FG265500YEL	BRUTE® 55 GALLON CONTAINER	YELLOW	55G	33.19	26.38	30.75	3
1779732	BRUTE® 55 GALLON CONTAINER	BLUE	55G	33.19	26.38	30.75	3
FG265500DGRN	BRUTE® 55 GALLON CONTAINER	DARK GREEN	55G	33.19	26.38	30.75	3
1779739	BRUTE® 55 GALLON CONTAINER	BLACK	55G	33.19	26.38	30.75	3

©2016 Rubbermaid Commercial Products LLC
8900 Northpointe Executive Park Drive, Huntersville, NC 28078

Rubbermaid®
Commercial Products

BRUTE® LIDS

BRUTE® lids are constructed with the highest quality material; a UV inhibitor ensures long life in even the most extreme commercial environments. Lids come in a variety of different styles, including self-draining lids, dome top lids, and funnel lids to meet any commercial need.

Features and Benefits:

- Self-draining lids have channels that prevent water from pooling, reducing still water buildup, and include ridges that enable stacking to provide space-efficient storage
- Dome top lids have a spring action door that allows for easy trash disposal while keeping odors and insects out
- Self-draining lids and dome top lids both have a snap-lock feature that ensures a secure fit
- Funnel top lids have a cut-out top that enables hands-free refuse disposal and a funnel design that conceals waste from public view

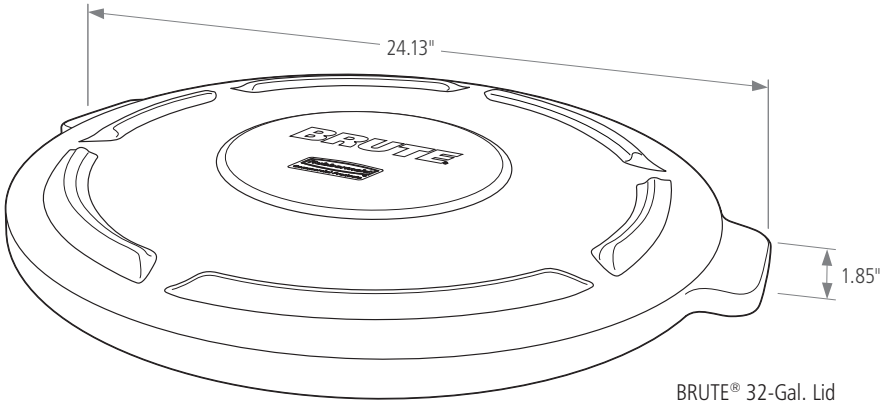

BRUTE® 32-Gal. Lid

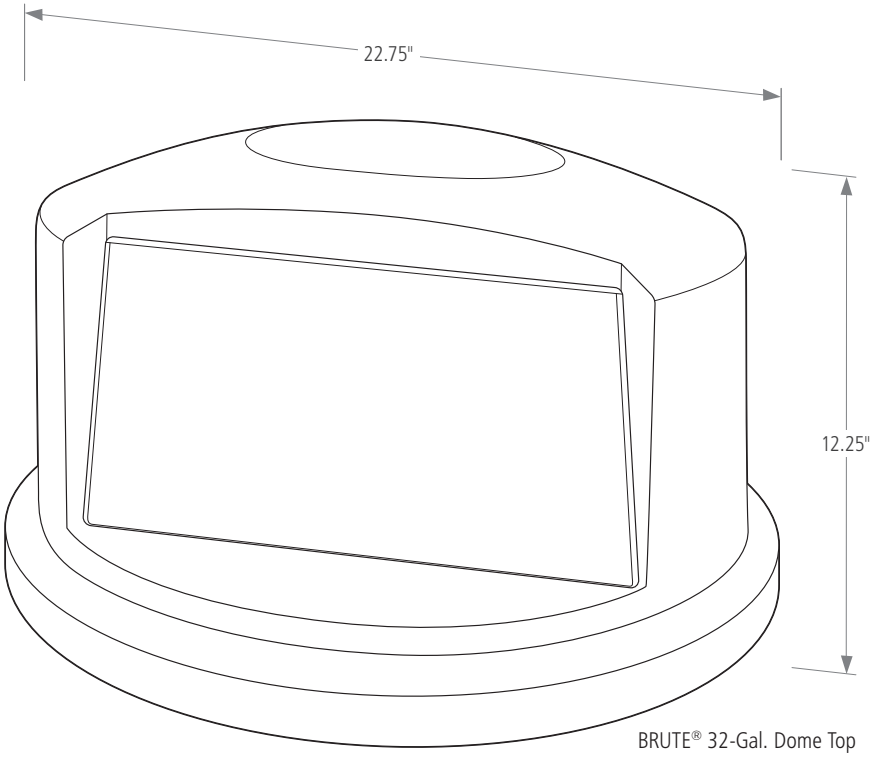

BRUTE® 32-Gal. Dome Top

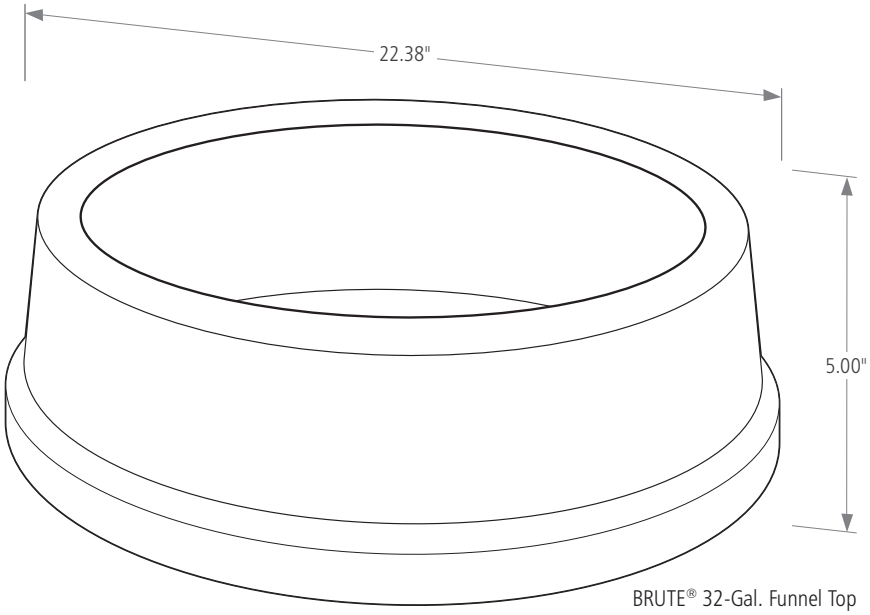

BRUTE® 32-Gal. Funnel Top

BRUTE® LIDS

SKU #	DESCRIPTION	COLOR	FITS	HEIGHT IN	DIAMETER IN	DIAMETER WITH HANDLE IN	PACK SIZE
FG260900GRAY	BRUTE® 10 GALLON LID	GRAY	10G	1.25	15.88	17.13	6
FG260900WHT	BRUTE® 10 GALLON LID	WHITE	10G	1.25	15.88	17.13	6
FG260900RED	BRUTE® 10 GALLON LID	RED	10G	1.25	15.88	17.13	6
FG260900YEL	BRUTE® 10 GALLON LID	YELLOW	10G	1.25	15.88	17.13	6
1779700	BRUTE® 10 GALLON LID	BLUE	10G	1.25	15.88	17.13	6
FG260900DGRN	BRUTE® 10 GALLON LID	DARK GREEN	10G	1.25	15.88	17.13	6
1926826	BRUTE® 10 GALLON LID	BLACK	10G	1.25	15.88	17.13	6
FG261960GRAY	BRUTE® 20 GALLON LID	GRAY	20G	1.80	19.88	21.63	6
FG261960WHT	BRUTE® 20 GALLON LID	WHITE	20G	1.80	19.88	21.63	6
FG261960RED	BRUTE® 20 GALLON LID	RED	20G	1.80	19.88	21.63	6
FG261960YEL	BRUTE® 20 GALLON LID	YELLOW	20G	1.80	19.88	21.63	6
1779731	BRUTE® 20 GALLON LID	BLUE	20G	1.80	19.88	21.63	6
FG261960DGRN	BRUTE® 20 GALLON LID	DARK GREEN	20G	1.80	19.88	21.63	6
FG261960BLA	BRUTE® 20 GALLON LID	BLACK	20G	1.80	19.88	21.63	6
FG263100GRAY	BRUTE® 32 GALLON LID	GRAY	32G	1.85	22.38	24.13	6
FG263100WHT	BRUTE® 32 GALLON LID	WHITE	32G	1.85	22.38	24.13	6
FG263100RED	BRUTE® 32 GALLON LID	RED	32G	1.85	22.38	24.13	6
FG263100YEL	BRUTE® 32 GALLON LID	YELLOW	32G	1.85	22.38	24.13	6
FG263100BLUE	BRUTE® 32 GALLON LID	BLUE	32G	1.85	22.38	24.13	6
FG263100DGRN	BRUTE® 32 GALLON LID	DARK GREEN	32G	1.85	22.38	24.13	6
1867532	BRUTE® 32 GALLON LID	BLACK	32G	1.85	22.38	24.13	6
FG264560GRAY	BRUTE® 44 GALLON LID	GRAY	44G	2.00	24.25	26.75	4
FG264560WHT	BRUTE® 44 GALLON LID	WHITE	44G	2.00	24.25	26.75	4
FG264560RED	BRUTE® 44 GALLON LID	RED	44G	2.00	24.25	26.75	4
FG264560YEL	BRUTE® 44 GALLON LID	YELLOW	44G	2.00	24.25	26.75	4
1779636	BRUTE® 44 GALLON LID	BLUE	44G	2.00	24.25	26.75	4
FG264560DGRN	BRUTE® 44 GALLON LID	DARK GREEN	44G	2.00	24.25	26.75	4
FG264560BLA	BRUTE® 44 GALLON LID	BLACK	44G	2.00	24.25	26.75	4
FG265400GRAY	BRUTE® 55 GALLON LID	GRAY	55G	2.09	26.75	29.13	3
FG265400WHT	BRUTE® 55 GALLON LID	WHITE	55G	2.09	26.75	29.13	3
FG265400RED	BRUTE® 55 GALLON LID	RED	55G	2.09	26.75	29.13	3
FG265400YEL	BRUTE® 55 GALLON LID	YELLOW	55G	2.09	26.75	29.13	3
1779733	BRUTE® 55 GALLON LID	BLUE	55G	2.09	26.75	29.13	3
FG265400DGRN	BRUTE® 55 GALLON LID	DARK GREEN	55G	2.09	26.75	29.13	3
1779738	BRUTE® 55 GALLON LID	BLACK	55G	2.09	26.75	29.13	3
FG263788GRAY	BRUTE® 32 GALLON DOME TOP	GRAY	32G	12.25	22.75	–	1
FG263788RED	BRUTE® 32 GALLON DOME TOP	RED	32G	12.25	22.75	–	1
1829397	BRUTE® 32 GALLON DOME TOP	DARK GREEN	32G	12.25	22.75	–	1
1829398	BRUTE® 32 GALLON DOME TOP	BLUE	32G	12.25	22.75	–	1
1829399	BRUTE® 32 GALLON DOME TOP	YELLOW	32G	12.25	22.75	–	1
FG264788GRAY	BRUTE® 44 GALLON DOME TOP	GRAY	44G	12.63	24.88	–	1
FG264788RED	BRUTE® 44 GALLON DOME TOP	RED	44G	12.63	24.88	–	1
1834838	BRUTE® 44 GALLON DOME TOP	DARK GREEN	44G	12.63	24.88	–	1
1834839	BRUTE® 44 GALLON DOME TOP	YELLOW	44G	12.63	24.88	–	1
1834840	BRUTE® 44 GALLON DOME TOP	BLUE	44G	12.63	24.88	–	1
FG265788GRAY	BRUTE® 55 GALLON DOME TOP	GRAY	55G	14.50	27.25	–	1
FG265788RED	BRUTE® 55 GALLON DOME TOP	RED	55G	14.50	27.25	–	1
FG354300GRAY	BRUTE® 32 GALLON FUNNEL TOP	GRAY	55G	5.00	22.38	–	4

©2016 Rubbermaid Commercial Products LLC
8900 Northpointe Executive Park Drive, Huntersville, NC 28078

Rubbermaid® Commercial Products

BRUTE® DOLLIES

BRUTE® dollies are designed to be durable, long-lasting, and are able to withstand the toughest commercial environments while simplifying everyday tasks.

Features and Benefits:

- Rugged casters help keep fully loaded BRUTE® containers stable, even on rough and uneven floors, and swivel smoothly for easy maneuvering
- Twist locks hold containers securely in place and unlock easily for unloading, allowing for easy transport
- Structural foam construction provides superior strength and durability

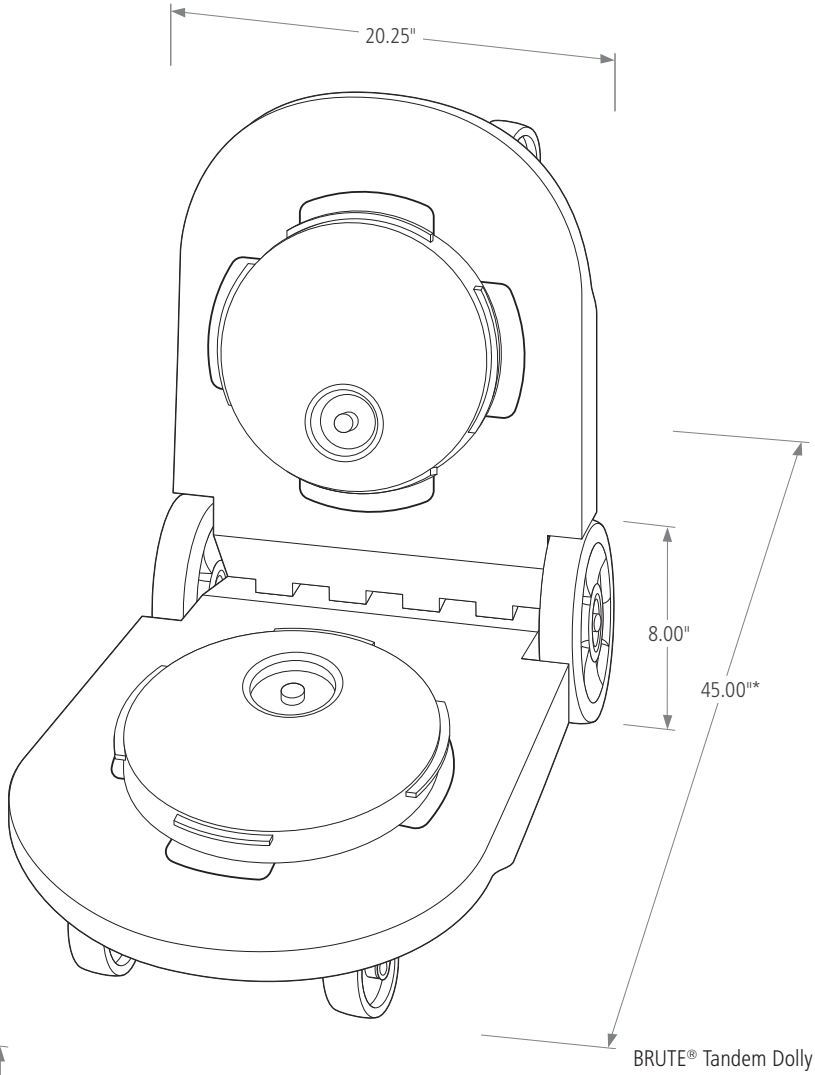

BRUTE® Tandem Dolly
* Unfolded

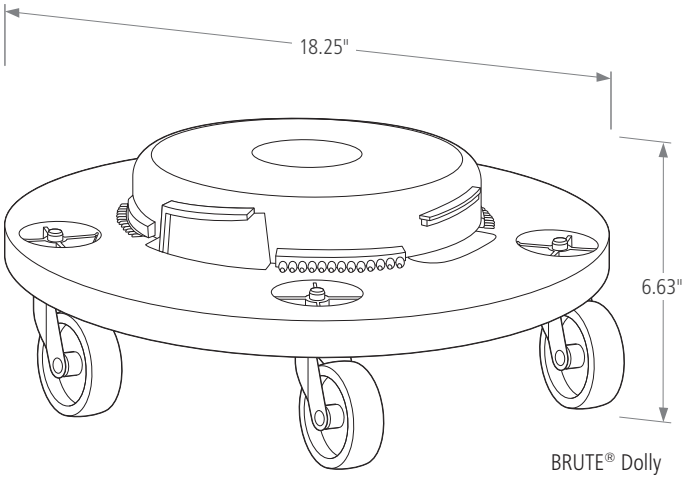

BRUTE® Dolly

BRUTE® DOLLIES

SKU #	DESCRIPTION	COLOR	FITS	LENGTH IN	WIDTH IN	HEIGHT IN	DIAMETER IN	PACK SIZE
FG264000BLA	BRUTE® DOLLY	BLACK	ALL	–	–	6.63	18.25	2
FG264043BLA	BRUTE® QUIET DOLLY	BLACK	ALL	–	–	6.63	18.25	2
FG264600BLA	BRUTE® TANDEM DOLLY	BLACK	ALL	45.00	20.25	8.00	–	1

©2016 Rubbermaid Commercial Products LLC
8900 Northpointe Executive Park Drive, Huntersville, NC 28078

BRUTE® CADDIES

BRUTE® caddies are designed to improve productivity. Caddies make the BRUTE® container more versatile and efficient, making the toughest jobs easier.

Features and Benefits:

- The Caddy Bag is made of a heavy-duty vinyl material with elastic pockets that make on-board storage easy. The adjustable straps make installation and removal easy on 32- and 44-gallon BRUTE® containers
- The Rim Caddy has multiple storage compartments and hooks, along with liner retention bands to keep liners securely in place, and has snap-on tabs to hold the caddy in place

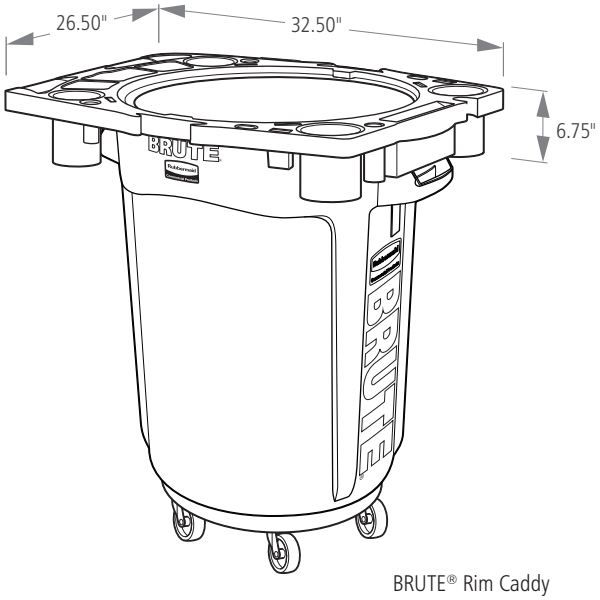

BRUTE® Rim Caddy

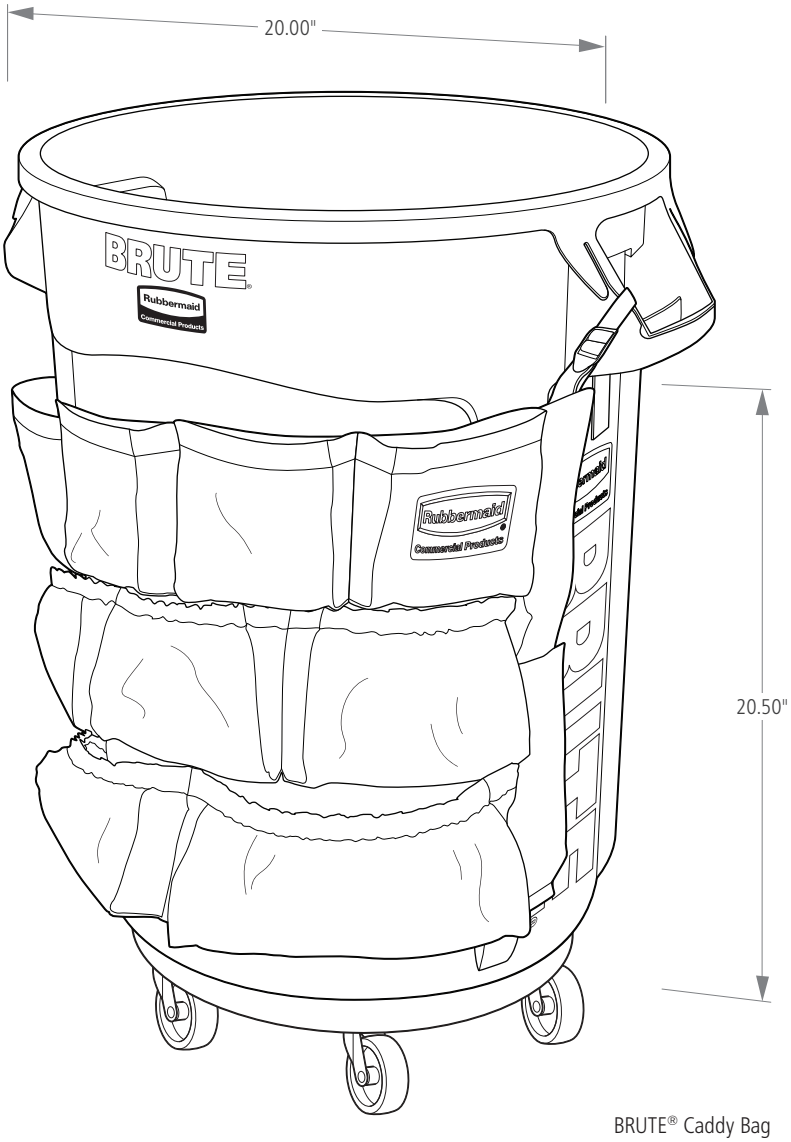

BRUTE® Caddy Bag

BRUTE® CADDIES

SKU #	DESCRIPTION	COLOR	FITS	LENGTH IN	WIDTH IN	HEIGHT IN	DIAMETER IN	PACK SIZE
FG264200YEL	BRUTE® CADDY BAG	YELLOW	32 AND 44 GALLON	–	–	20.50	20.00	6
1867533	**EXECUTIVE** BRUTE® CADDY BAG	BLACK	32 AND 44 GALLON	–	–	20.50	20.00	6
FG9W8700YEL	BRUTE® RIM CADDY	YELLOW	44 GALLON	32.50	26.50	6.75	–	1

©2016 Rubbermaid Commercial Products LLC
8900 Northpointe Executive Park Drive, Huntersville, NC 28078

Rubbermaid®
Commercial Products

BRUTE®



THE TOUGHEST JUST GOT MORE PRODUCTIVE



VENTING CHANNELS

50% easier to lift liners



BAG CINCHES

Efficent knot-free liner changes



CONTOURED BASE HANDLES

Easier lifting and emptying

BRUTE Containers

	DESCRIPTION	ITEM #
10 GALLON	BRUTE 10 GALLON GRAY	FG261000GRAY
	BRUTE 10 GALLON WHITE	FG261000WHT
	BRUTE 10 GALLON RED	FG261000RED
	BRUTE 10 GALLON YELLOW	FG261000YEL
	BRUTE 10 GALLON BLUE	1779699
	BRUTE 10 GALLON DARK GREEN	FG261000DGRN
	BRUTE 10 GALLON BLACK	1926827
20 GALLON	BRUTE 20 GALLON GRAY	FG262000GRAY
	BRUTE 20 GALLON WHITE	FG262000WHT
	BRUTE 20 GALLON RED	FG262000RED
	BRUTE 20 GALLON YELLOW	FG262000YEL
	BRUTE 20 GALLON BLUE	FG262000BLUE
	BRUTE 20 GALLON DARK GREEN	FG262000DGRN
	BRUTE 20 GALLON BLACK	1779734
	BRUTE 20 GALLON RECYCLING BLUE	FG262073BLUE
	BRUTE 20 GALLON RECYCLING DARK GREEN	1926828
32 GALLON	BRUTE 32 GALLON GRAY	FG263200GRAY
	BRUTE 32 GALLON WHITE	FG263200WHT
	BRUTE 32 GALLON RED	FG263200RED
	BRUTE 32 GALLON YELLOW	FG263200YEL
	BRUTE 32 GALLON BLUE	FG263200BLUE
	BRUTE 32 GALLON DARK GREEN	FG263200DGRN
	BRUTE 32 GALLON BLACK	1867531
	BRUTE 32 GALLON RECYCLING BLUE	FG263273BLUE
	BRUTE 32 GALLON RECYCLING DARK GREEN	1788472
44 GALLON	BRUTE 44 GALLON GRAY	FG264360GRAY
	BRUTE 44 GALLON WHITE	1779740
	BRUTE 44 GALLON RED	FG264360RED
	BRUTE 44 GALLON YELLOW	FG264360YEL
	BRUTE 44 GALLON BLUE	FG264360BLUE
	BRUTE 44 GALLON DARK GREEN	1779741
	BRUTE 44 GALLON BLACK	FG264360BLA
	BRUTE 44 GALLON RECYCLING BLUE	FG264307BLUE
	BRUTE 44 GALLON RECYCLING DARK GREEN	1926829
55 GALLON	BRUTE 55 GALLON GRAY	FG265500GRAY
	BRUTE 55 GALLON WHITE	FG265500WHT
	BRUTE 55 GALLON RED	FG265500RED
	BRUTE 55 GALLON YELLOW	FG265500YEL
	BRUTE 55 GALLON BLUE	1779732
	BRUTE 55 GALLON DARK GREEN	FG265500DGRN
	BRUTE 55 GALLON BLACK	1779739



BRUTE Lids and Accessories

	DESCRIPTION	ITEM #
10 GALLON	BRUTE 10 GALLON LID GRAY	FG260900GRAY
	BRUTE 10 GALLON LID WHITE	FG260900WHT
	BRUTE 10 GALLON LID RED	FG260900RED
	BRUTE 10 GALLON LID YELLOW	FG260900YEL
	BRUTE 10 GALLON LID BLUE	1779700
	BRUTE 10 GALLON LID DARK GREEN	FG260900DGRN
	BRUTE 10 GALLON LID BLACK	1926826
20 GALLON	BRUTE 20 GALLON LID GRAY	FG261960GRAY
	BRUTE 20 GALLON LID WHITE	FG261960WHT
	BRUTE 20 GALLON LID RED	FG261960RED
	BRUTE 20 GALLON LID YELLOW	FG261960YEL
	BRUTE 20 GALLON LID BLUE	1779731
	BRUTE 20 GALLON LID DARK GREEN	FG261960DGRN
	BRUTE 20 GALLON LID BLACK	FG261960BLA
32 GALLON	BRUTE 32 GALLON LID GRAY	FG263100GRAY
	BRUTE 32 GALLON LID WHITE	FG263100WHT
	BRUTE 32 GALLON LID RED	FG263100RED
	BRUTE 32 GALLON LID YELLOW	FG263100YEL
	BRUTE 32 GALLON LID BLUE	FG263100BLUE
	BRUTE 32 GALLON LID DARK GREEN	FG263100DGRN
	BRUTE 32 GALLON LID BLACK	1867532
	BRUTE 32 GALLON FUNNEL TOP GRAY	FG354300GRAY
	BRUTE 32 GALLON DOME TOP GRAY	FG263788GRAY
	BRUTE 32 GALLON DOME TOP RED	FG263788RED
	BRUTE 32 GALLON DOME TOP DARK GREEN	1829397
	BRUTE 32 GALLON DOME TOP BLUE	1829398
	BRUTE 32 GALLON DOME TOP YELLOW	1829399
44 GALLON	BRUTE 44 GALLON LID GRAY	FG264560GRAY
	BRUTE 44 GALLON LID WHITE	FG264560WHT
	BRUTE 44 GALLON LID RED	FG264560RED
	BRUTE 44 GALLON LID YELLOW	FG264560YEL
	BRUTE 44 GALLON LID BLUE	1779636
	BRUTE 44 GALLON LID DARK GREEN	FG264560DGRN
	BRUTE 44 GALLON LID BLACK	FG264560BLA
	BRUTE 44 GALLON DOME TOP GRAY	FG264788GRAY
	BRUTE 44 GALLON DOME TOP RED	FG264788RED
	BRUTE 44 GALLON DOME TOP DARK GREEN	1834838
	BRUTE 44 GALLON DOME TOP YELLOW	1834839
	BRUTE 44 GALLON DOME TOP BLUE	1834840
55 GALLON	BRUTE 55 GALLON LID GRAY	FG265400GRAY
	BRUTE 55 GALLON LID WHITE	FG265400WHT
	BRUTE 55 GALLON LID RED	FG265400RED
	BRUTE 55 GALLON LID YELLOW	FG265400YEL
	BRUTE 55 GALLON LID BLUE	1779733
	BRUTE 55 GALLON LID DARK GREEN	FG265400DGRN
	BRUTE 55 GALLON LID BLACK	1779738
	BRUTE 55 GALLON DOME TOP GRAY	FG265788GRAY
	BRUTE 55 GALLON DOME TOP RED	FG265788RED
ACCESSORIES	BRUTE DOLLY	FG264000BLA
	BRUTE QUIET DOLLY	FG264043BLA
	BRUTE TANDEM DOLLY	FG264600BLA
	BRUTE CADDY BAG	FG264200YEL
	BRUTE RIM CADDY	FG9W8700YEL

RCP-403 | #152155
©2015 Rubbermaid Commercial Products LLC
8900 Northpointe Executive Drive, Huntersville, NC 28078

Rubbermaid® Commercial Products

To see our complete range of refuse solutions visit our online catalog at rubbermaidcommercial.com

Rubbermaid®
Commercial Products



FG9T7200/1861429

ES

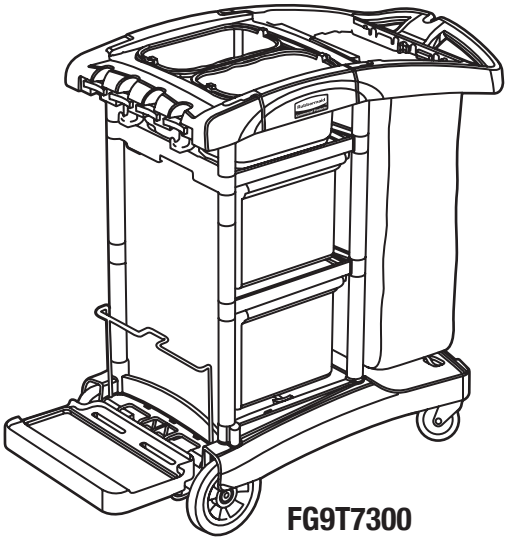

FG9T7300

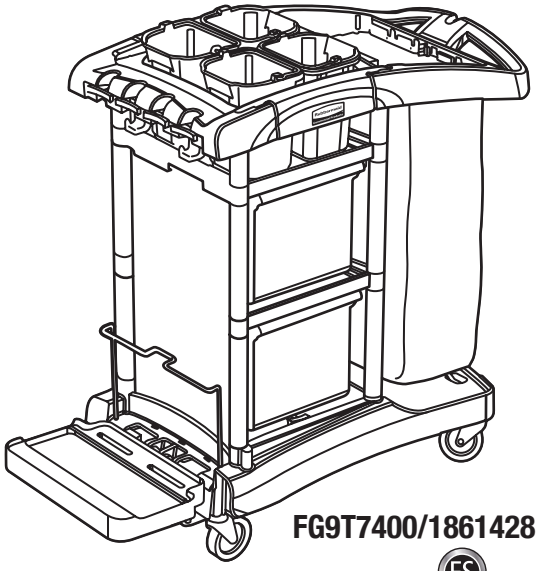

FG9T7400/1861428

ES

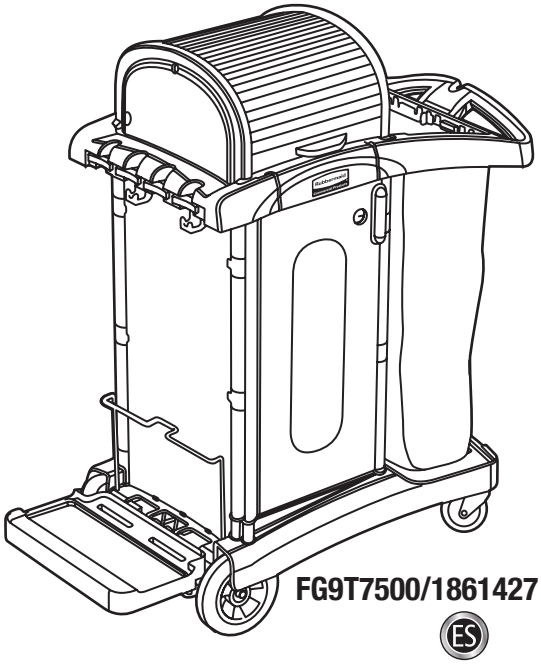

FG9T7500/1861427

ES

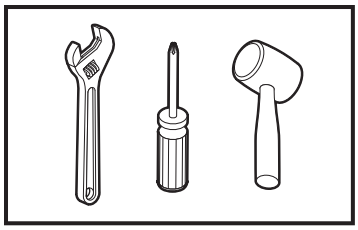

FG9T7200, FG9T7300, FG9T7500

FG9T7300, FG9T7400

FG9T7400

FG9T7500/1861427

1

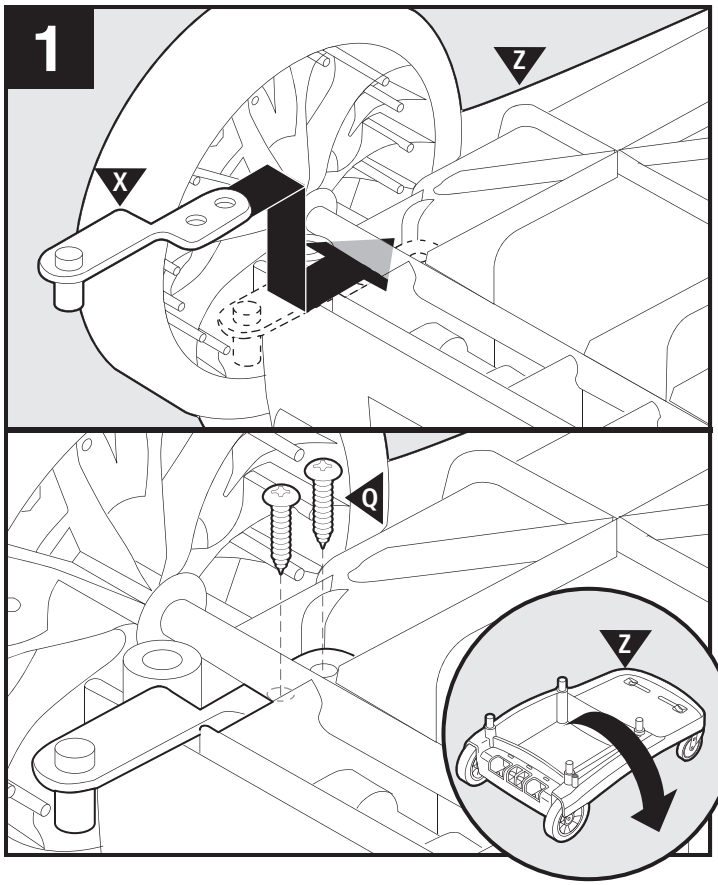

2

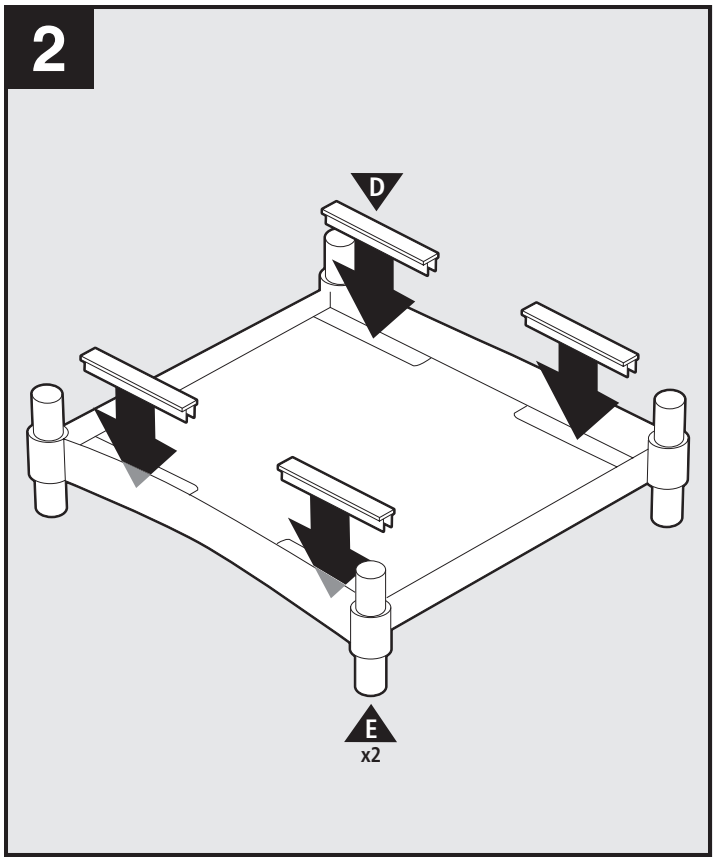

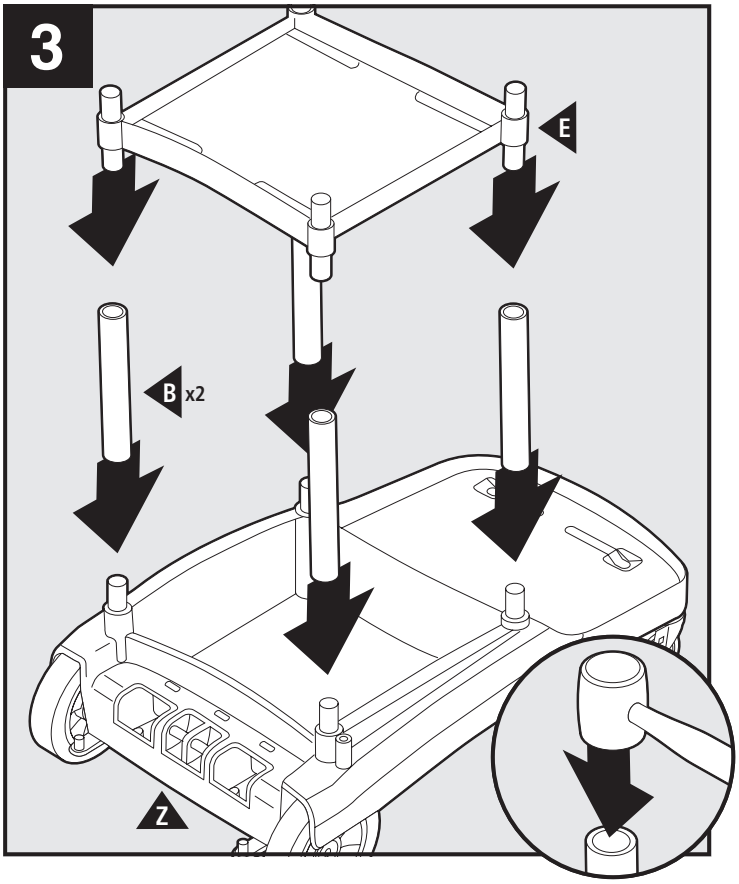
3
E
B x2
Z

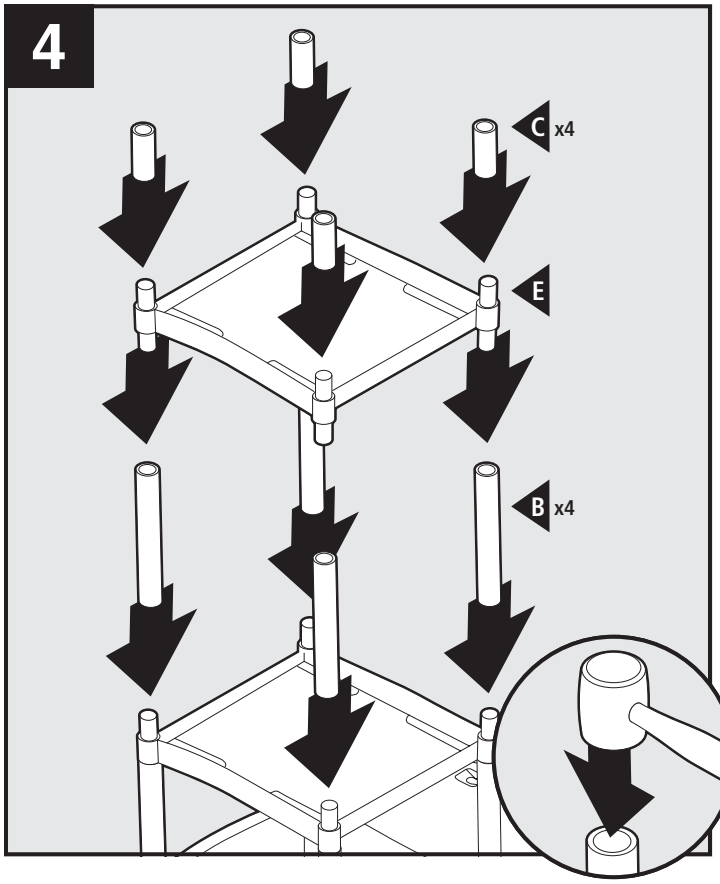
4
C x4
E
B x4

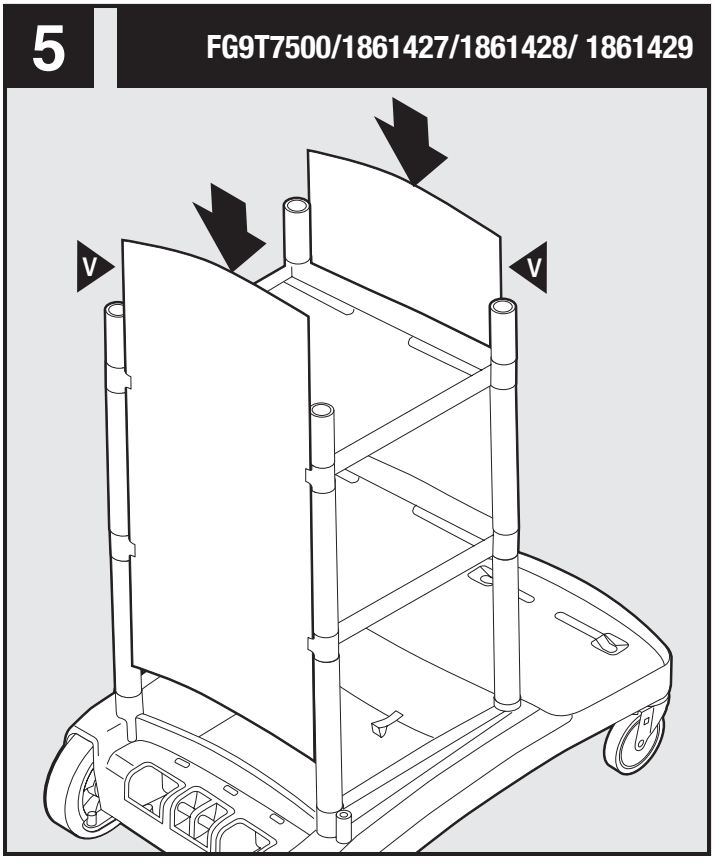
5
FG9T7500/1861427/1861428/ 1861429
V
V

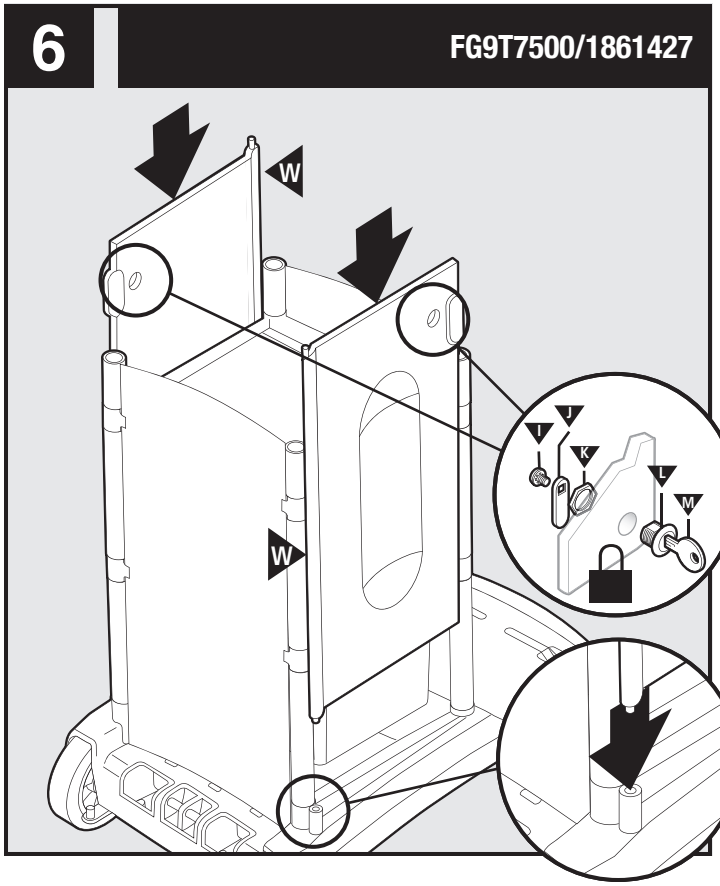
6
FG9T7500/1861427
W
W
I
J
K
L
M

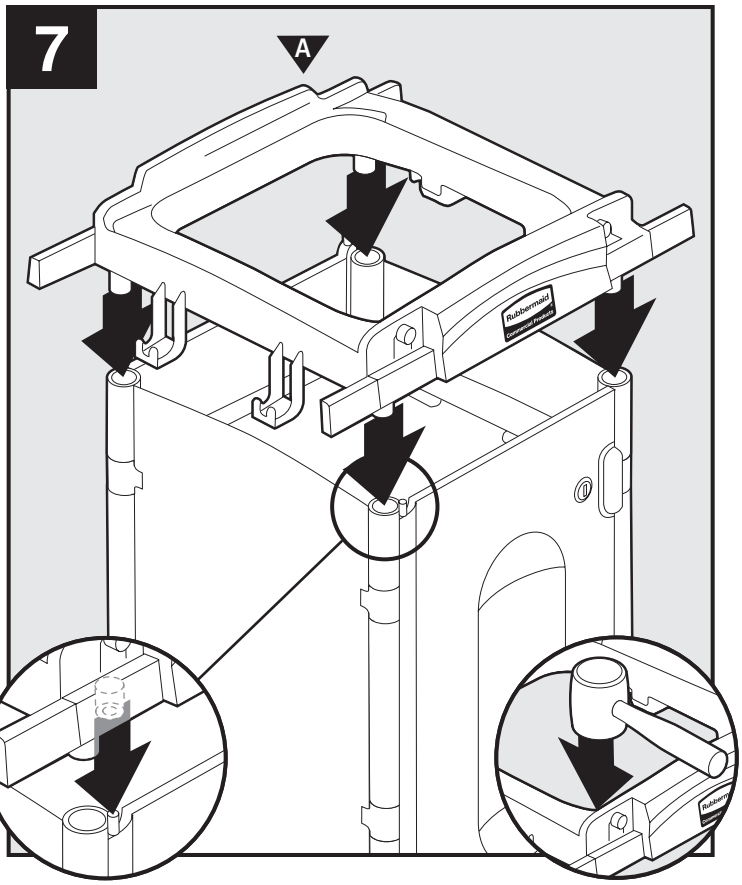
7
A

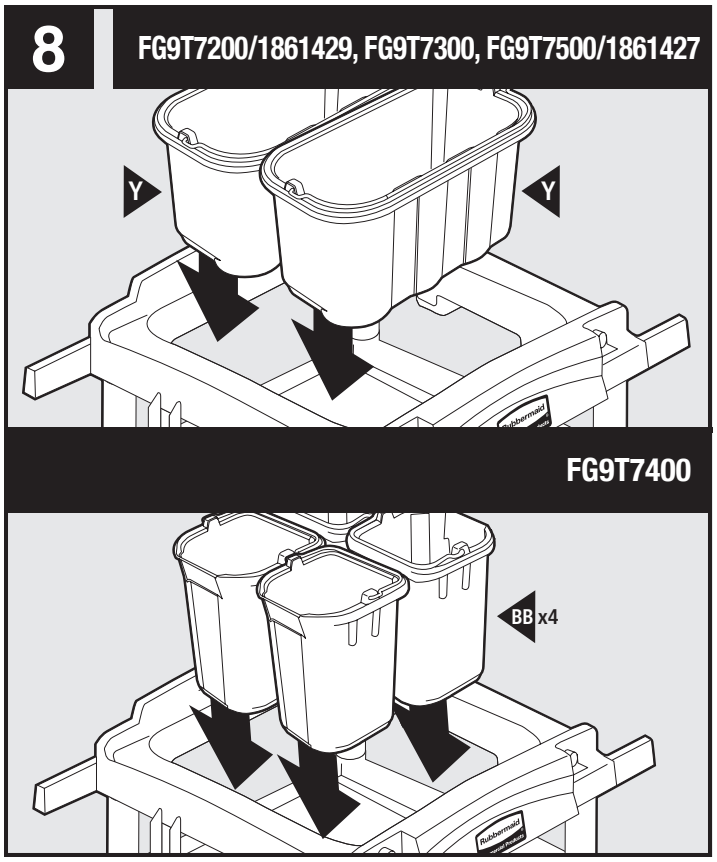
8
FG9T7200/1861429, FG9T7300, FG9T7500/1861427
Y
Y
FG9T7400
BB x4

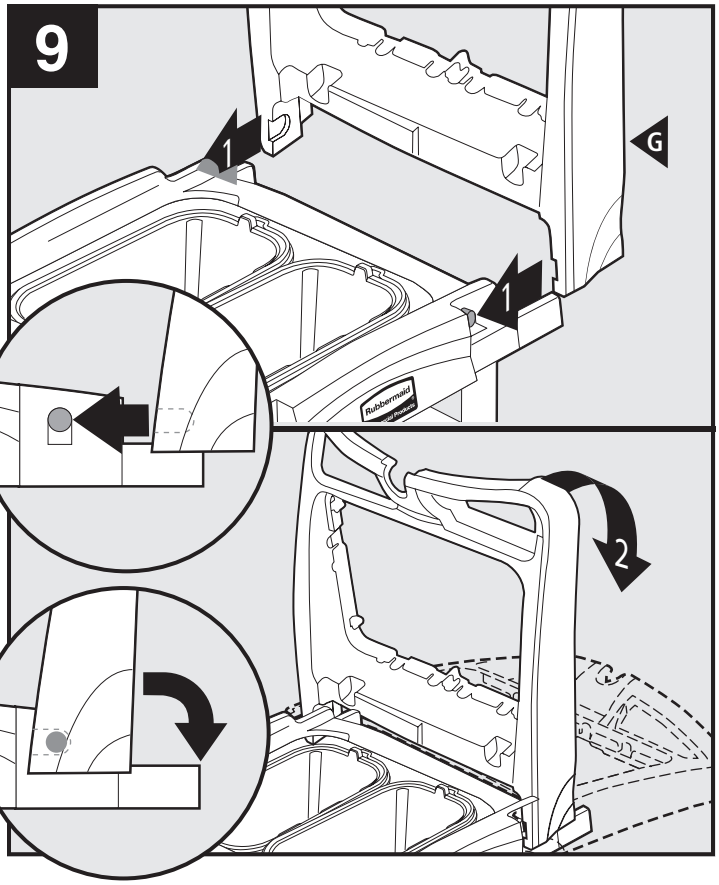
9
G
1
1
2

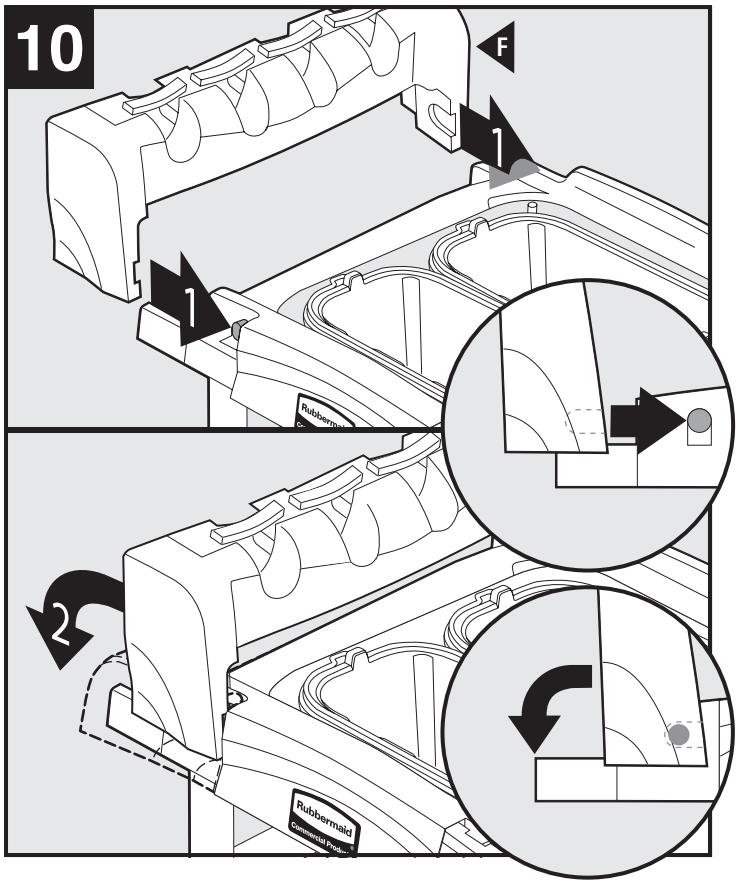
10
F
1
1
2

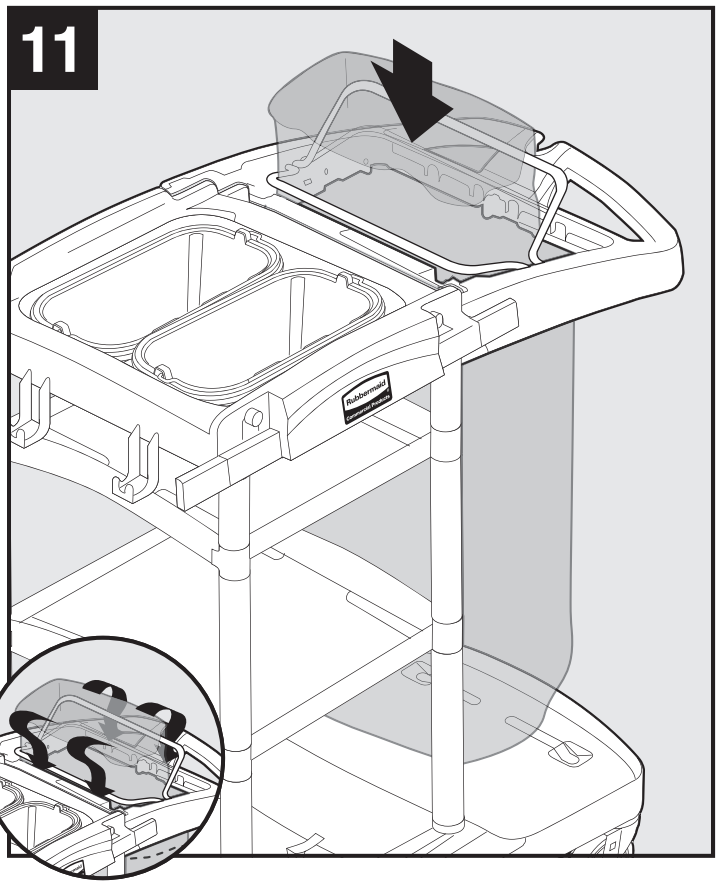
11

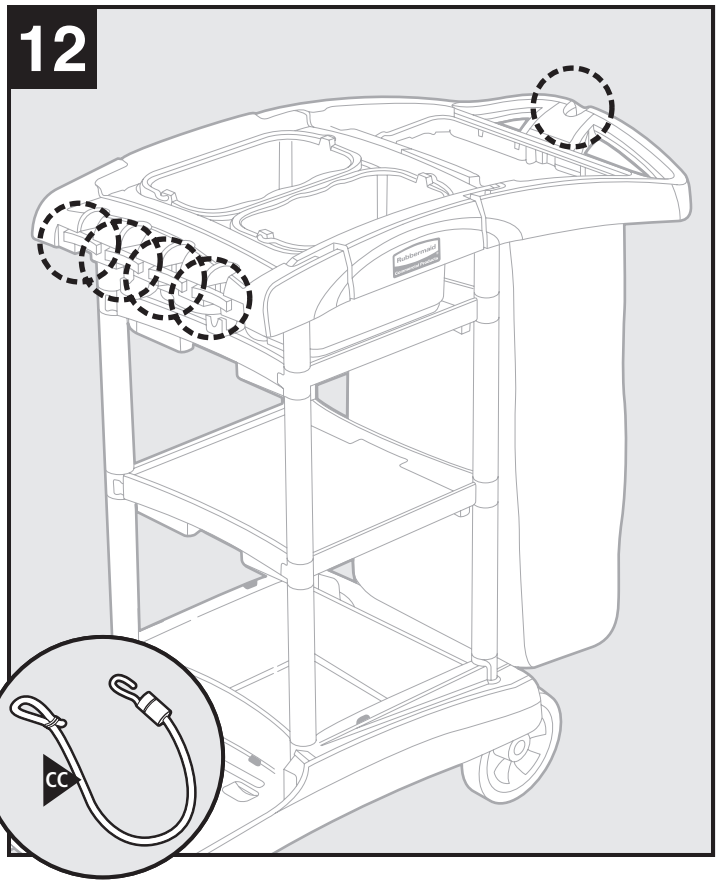
12
CC

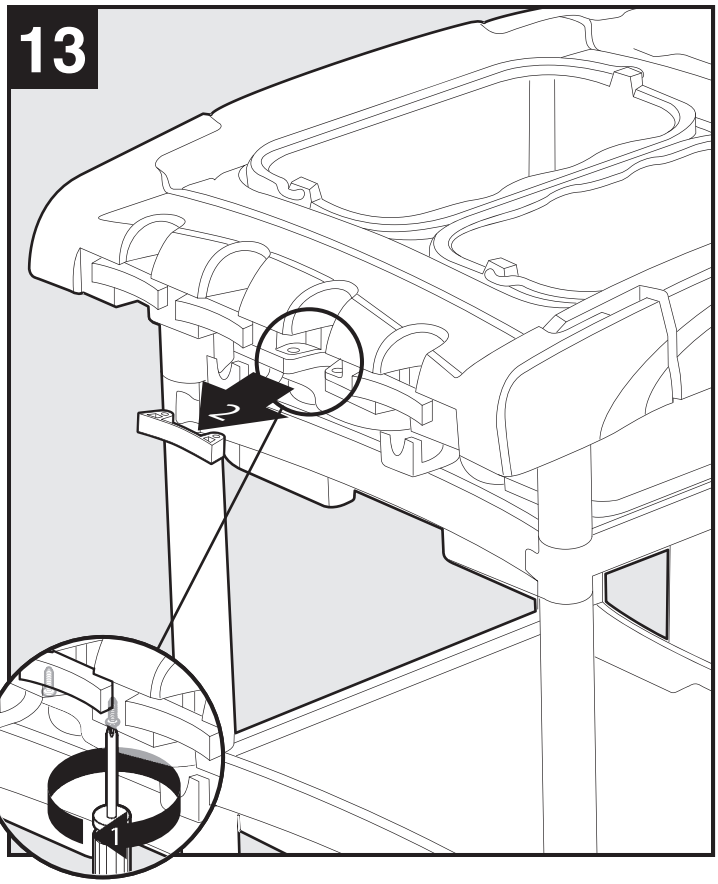
13
2
1

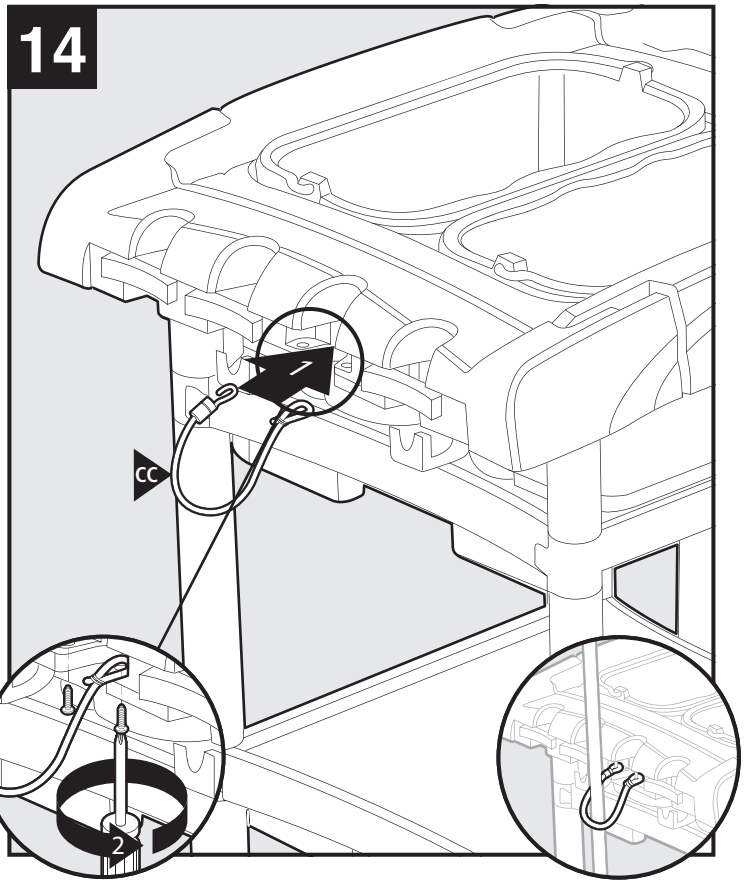
14
1
CC
2

15 FG9T7300/1861428, FG9T7400, FG9T7500/1861427

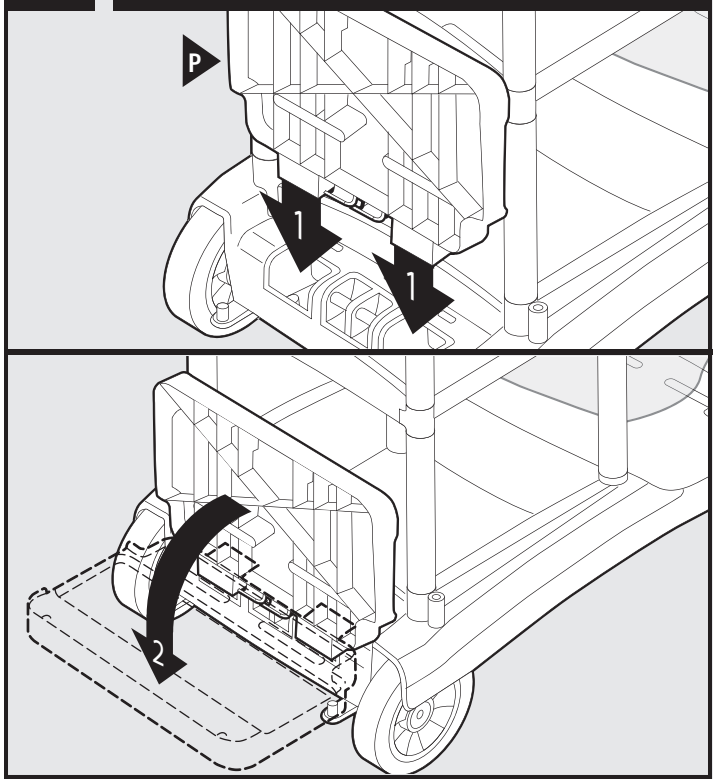

16 FG9T7300/1861428, FG9T7400, FG9T7500/1861427

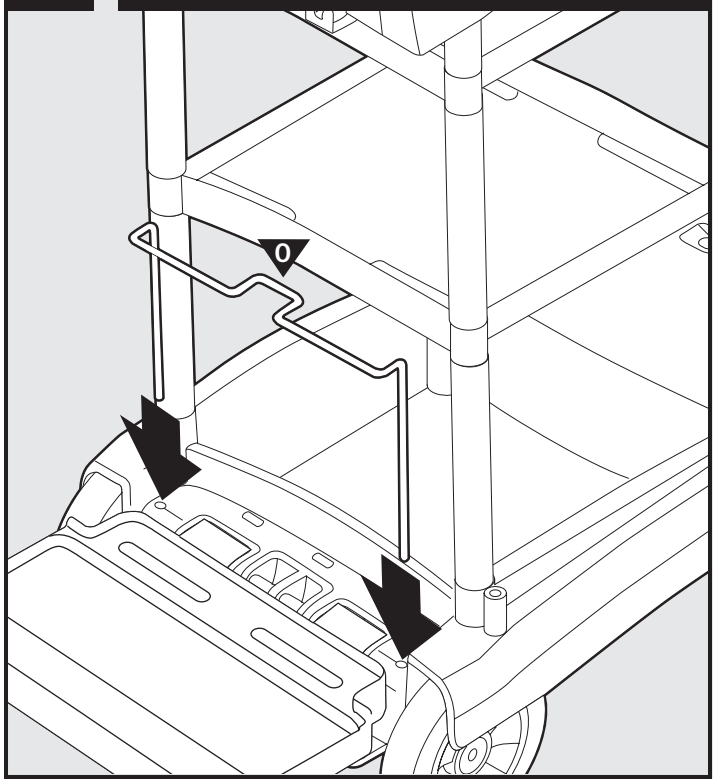

17 FG9T7300/FG9T7400

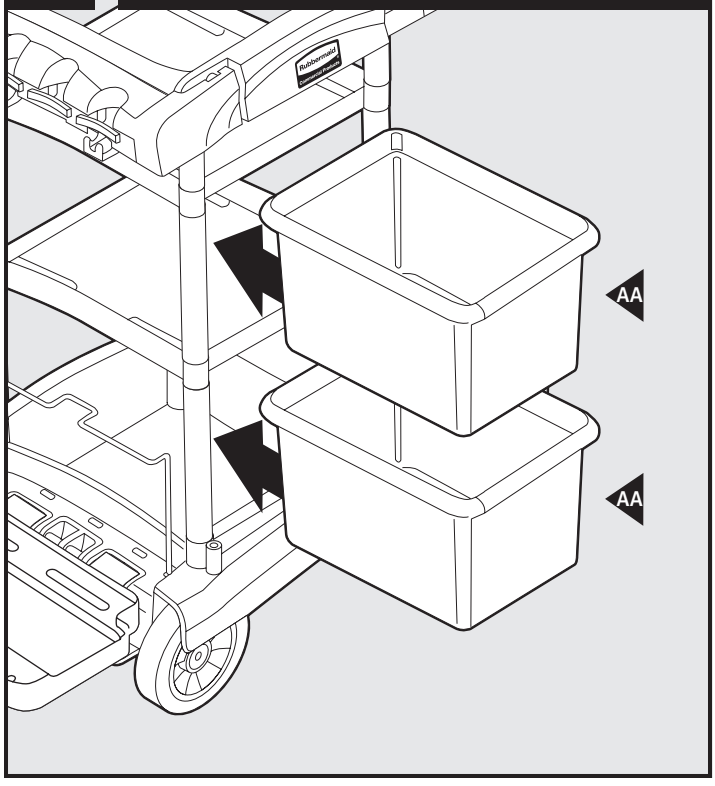

18 FG9T7500/1861427

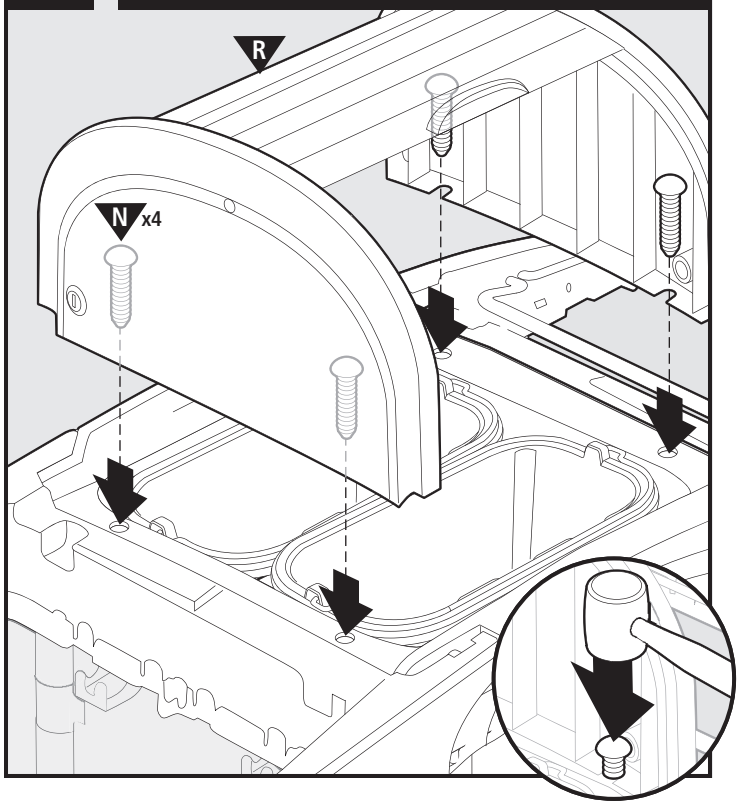

9T75

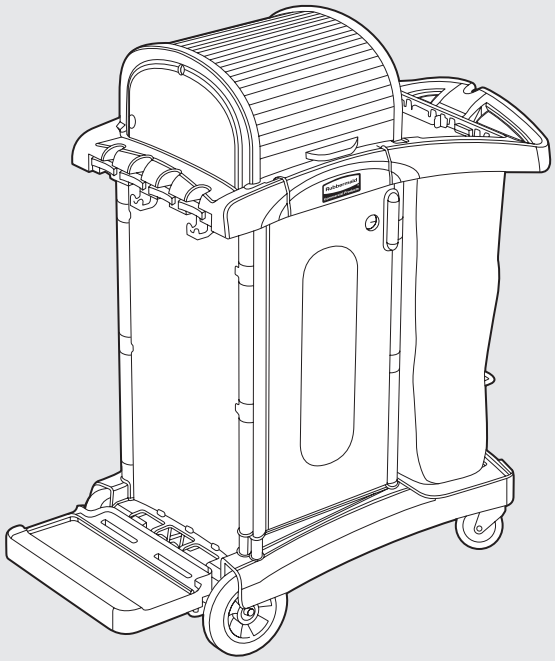

19 FG9T7200/1861429, FG9T7300/1861428, FG9T7400

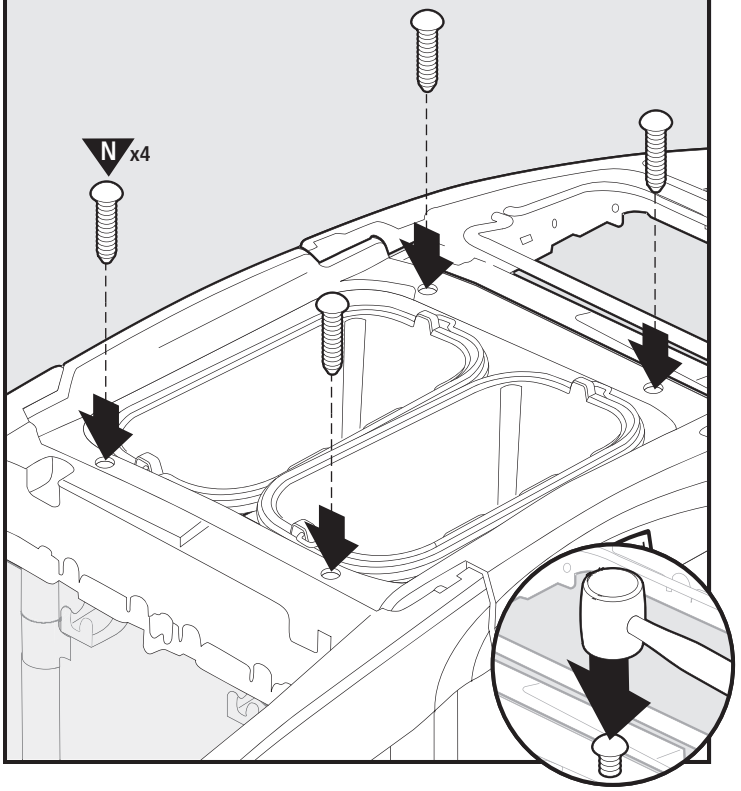

FG9T7200/FG9T7300/FG9T7400

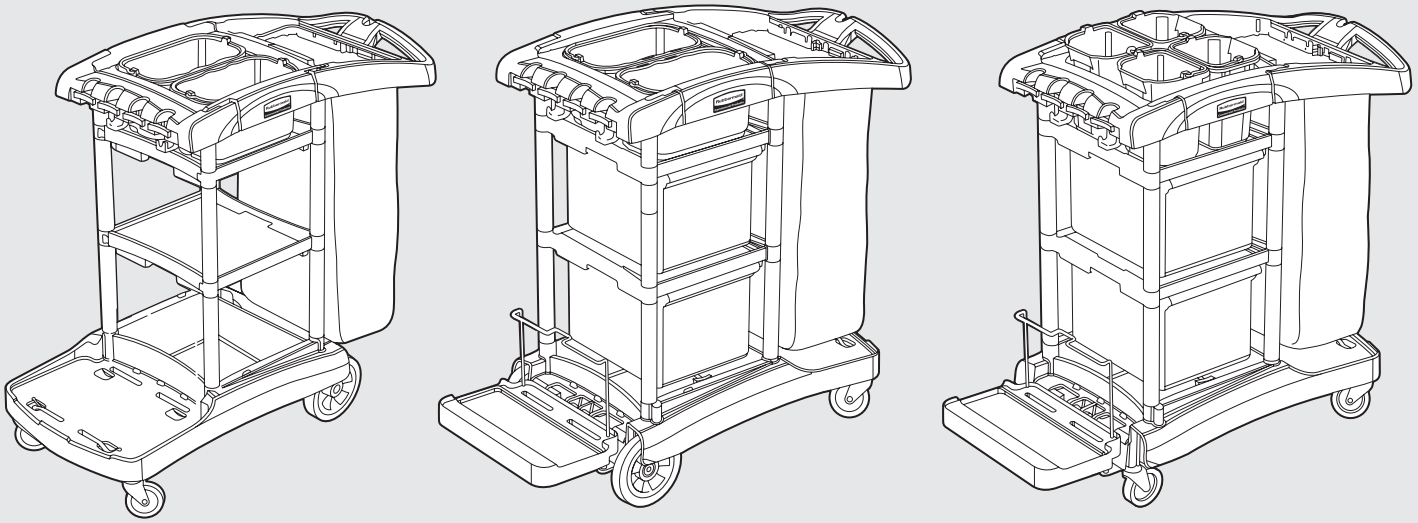

Options

FG9T7200/1861429

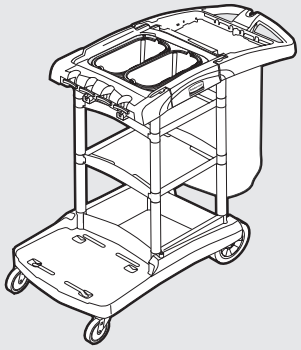

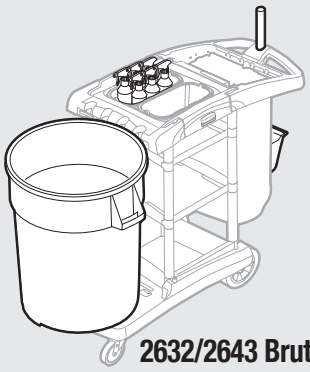

2632/2643 Brute

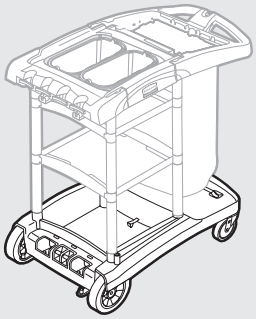

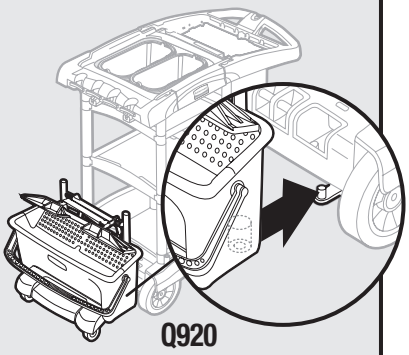

Q920

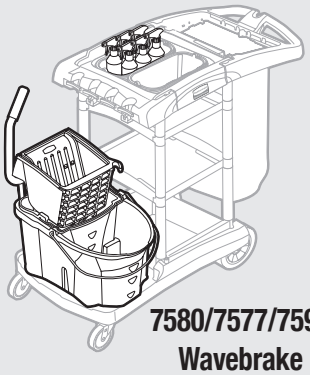

7580/7577/7590
Wavebrake

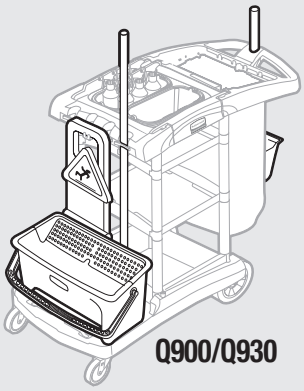

Q900/Q930

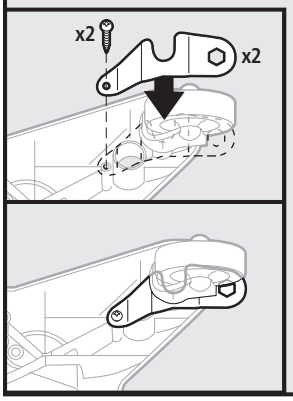

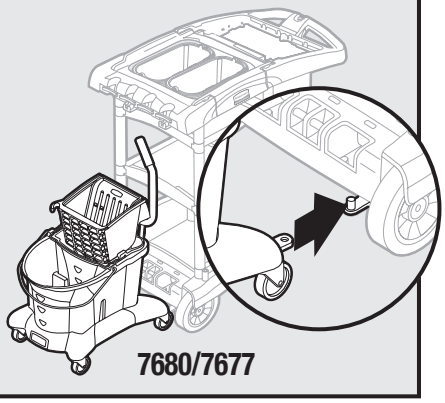

7680/7677

FG9T7300/FG9T7400/1861428

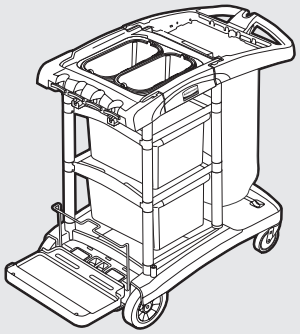

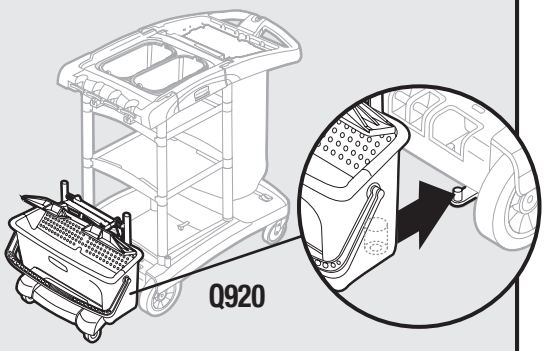

Q920

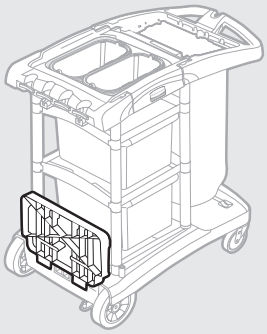

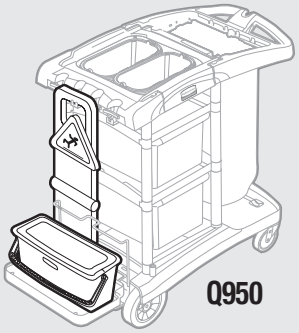

Q950

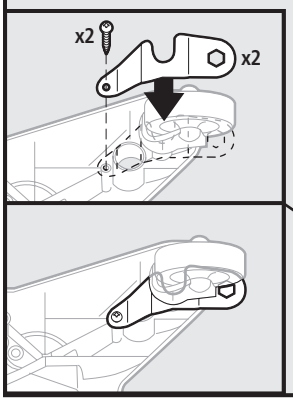

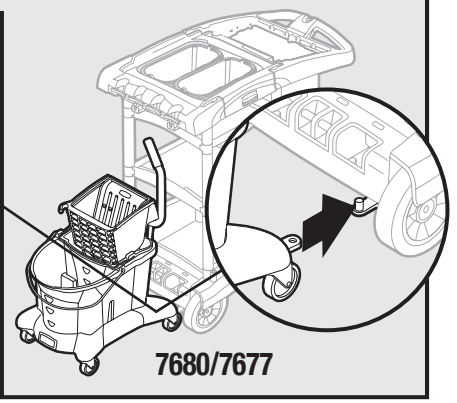

7680/7677

Products manufactured under quality management system registered to ISO 9001:2008
©2013 Rubbermaid Commercial Products LLC

Product # FG9T7200, FG9T7300, FG9T7400, FG9T7500, 1861427, 1861428, 1861429

Rubbermaid®
Commercial Products

Rubbermaid Commercial Products LLC
3124 Valley Avenue
Winchester, VA 22601 U.S.A.
Phone: 1-800-347-9800
www.rubbermaidcommercial.com
1877582

New & Reconditioned Equipment & Parts - www.southeasternequipment.net

3051

Spectrum™ 15D & 18D

Dual Motor Upright Vacuums



More Productivity. Better Filtration. Better Value.
Advance's 15 and 18 inch Spectrum dual-motor upright vacuums deliver the superior performance results expected from Advance vacuums: dirt pickup and filtration. Upright vacuums rely on a combination of dirt pickup to remove soil from carpets and filtration to ensure that dust and other airborne particles stay captured. With the addition of a brush motor, the Spectrum dual-motor vacuum has a total of 1,350 watts of power. Operators now have single pass power in an upright vacuum, which results in greater productivity. According to independent testing by ISSA, dual motor vacuums generate 16% greater productivity then single motor vacuum of the same width*. The unique design of the power head creates a seal with the carpet surface to agitate and capture dirt and dust that other dual motor vacuums miss.

Spectrum's innovative design has earned the CRI (Carpet & Rug Institute) Seal of Approval – signifying that Spectrum meets the industry's newest dirt pickup and filtration standards for vacuum performance. These standards are more stringent than those used previously for Green Label certification. And, at a budget conscious price, it offers better performance and increased productivity at a fraction of the cost to clean.

True soil removal also requires proper filtration to ensure that dirt particles are not released back into the air. CRI standards require a vacuum to emit less than 100 micrograms of dust per cubic meter of airflow exhaust and consider ratings of less than 25 micrograms to be exceptional. Spectrum dual motor vacuums emit just 6 micrograms per cubic meter of airflow exhaust, an astounding measure that says when Spectrum picks up dirt, it stays picked up! Spectrum's filtration performance is due to the vacuum's three-stage filtration system, which includes a certified H.E.P.A. filter – an important distinction that guarantees each filter has been tested for true H.E.P.A. performance by an independent third-party laboratory. This true soil removal results in superior indoor air quality that operators and building occupants are sure to appreciate.

A full complement of tools and user-friendly design features make Spectrum easy to use and maintain. Operators will appreciate the versatile quick-draw detailing wand, simple brush and handle height adjustments and the convenient cord restraint and storage features. Vacuum maintenance is a breeze thanks to features such as a bag full/clog light, unique quick-change bag design, and a service-free belt system with a two-year warranty.

Spectrum dual motor vacuums actually outperform upright vacuums sold at up to twice the price. When compared on dirt pickup and filtration, Spectrum literally leaves its more expensive counterparts in the dust.

Standard Accessories Include

- Crevice tool
- Upholstery tool

Typical Applications Include

- Hotels / Motels
- Hospitality
- Hospitals
- Long-term Care Facilities
- Building Service Contractors
- Retail Facilities
- Government Facilities
- Education

Features and Benefits

- CRI Seal of Approval for vacuums
- Better dirt pickup than competitors
- Better filtration – certified H.E.P.A. filter standard

Advance
by Nilfisk

New & Reconditioned Equipment & Parts - www.southeasternequipment.net

Spectrum™ 15D & 18D

Dual Motor Upright Vacuums



Quick change bag is the first level of filtration.



Cord restraint protects against cord abuse.



Tools-free access to remove brush.



Certified H.E.P.A. is the final filtration stage.



Accessories are conveniently tucked behind the vacuum wand.

1. *50 foot safety yellow cord*
2. *Heavy duty cord restraint*
3. *Adjustable height handle*
4. *Convenient front handle for lifting*
5. *Certified H.E.P.A. filter*
6. *Easy release foot pedal turns the brush motor on or off when in the upright position*
7. *Easy to adjust brush height warning light alerts operators when the brush is to low*
8. *Tools-free removable brush*
9. *Non-marking wrap-around bumper*



Defining Cleaning Innovation…

- Our products are designed using innovative technology that increases productivity and drives down the cost to clean.
- You can get expert service and maintenance for your Advance machines from factory-trained personnel around the world. Fast parts delivery, too.
- Maintain peak performance with Nilfisk Parts.

Technical Specifications

Model	Spectrum™ 15D	Spectrum™ 18D
Vacuum Motor	120 V, 60 Hz, 1,000 W, 9 amp, 2-stage	120 V, 60 Hz, 1,000 W, 9 amp, 2-stage
Brush Motor	120 V, 60 Hz, 350 W	120 V, 60 Hz, 350 W
Motor Protection	Airflow bypass valve and thermal overload protection	Airflow bypass valve and thermal overload protection
Suction (waterlift) / Airflow	92 in / 93 cfm	92 in / 93 cfm
Brush	Dual row, chevron style, nylon with variable manual adjustment	Dual row, chevron style, nylon with variable manual adjustment
Brush Speed	2,800 RPM	2,800 RPM
Cleaning Path	14.5 in (36.8 cm)	17.5 in (44.5 cm)
Filtration	2-ply paper filter bag, motor protection filter, certified H.E.P.A. exhaust filter	2-ply paper filter bag, motor protection filter, certified H.E.P.A. exhaust filter
Bag Capacity	4.2 qt (4 L)	4.2 qt (4 L)
Power Cable	50 ft (15 m) 18/3 wire, safety yellow	50 ft (15 m) 18/3 wire, safety yellow
Sound Level	69 dB A	69 dB A
Onboard Tools	4:1 stretch hose, wand, crevice and upholstery tools	4:1 stretch hose, wand, crevice and upholstery tools
Dimensions (LxWxH)	13 in x 15 in x 44 in (33 cm x 38 cm x 113 cm)	13 in x 18 in x 44 in (33 cm x 46 cm x 113 cm)
Weight (with cord)	21.3 lb (9.7 kg)	22 lb (10 kg)
Warranty	Motor and belts – 2 years Non-wear parts – 1 year, labor – 1 year	Motor and belts – 2 years Non-wear parts – 1 year, labor – 1 year
Model Number	9060407010	9060507010

Specifications are subject to change without notice.

Nilfisk, Inc.

9435 Winnetka Avenue North
Brooklyn Park, MN 55445
www.advance-us.com
Phone 800-850-5559
Fax 800-989-6566

240 Superior Boulevard
Mississauga, Ontario, Canada L5T 2L2
www.nilfisk-advance.ca
Phone 800-668-8400
Fax 800-263-5111

Advance by Nilfisk

recyclable

©2017, Nilfisk, Inc. Printed in U.S.A., Form L3089A, 7-17

3052A & 3052B

Single and Dual Speed Floor Machines



High-performance, proven floor machines from the leader in floor care.

These durable floor machines are proven performers for polishing, scrubbing and stripping most any hard floor surface.

Long-life, durable construction
Our floor machines are made from durable, corrosion-proof, polyethylene.

Superior performance with low maintenance
With a dramatically-simplified design, and a heavy-duty 1.5 hp / 1.12 kW motor, these single and dual speed floor machines require little maintenance while delivering superior cleaning and maintenance results.

Key Benefits

- Superior performance from heavy-duty 1.5 hp / 1.12 kW motors and pad drivers
- Simple twist grip operation with safety lock to protect operators
- Single or dual speeds with optional solution tank offer versatile cleaning performance

1400-21 02/10

©2010 Tennant and Nobles are registered trademarks of Tennant Company, whose products are sold and serviced through Tennant Sales and Service Company, as well as through distributors.

Tennant
701 North Lilac Drive
Minneapolis, MN
55440-1452, USA

800.553.8033
763.540.1200
In Quebec: 514.335.6061

www.tennantco.com
info@tennantco.com

3052A & 3052B



Single and Dual Speed Floor Machines

Features	Specifications*		
Product Name	FM-17-SS	FM-20-SS	FM-20-DS
Pad Drive System			
Brush rpm	175 rpm		185 rpm (scrub)/330 rpm (buff)
Motor Volts	120 V		120 V
Motor HP	1.5 hp / 1.12 kW		1.5 hp / 1.12 kW
Motor Type	AC, 66 frame, circuit breaker protected, triple planetary, precision gear box, 10:1 gear ratio		Permanent magnet DC, 66 frame, dual speed, circuit breaker protected, triple planetary, precision gear box, 10:1 gear ratio
Motor Amps	12 A		12 A
Motor Watts	1100 watts		1100 watts
Construction			
Handle	Twist grip operation with safety lock		
Base/ Handle	Corrosion-proof rotationally-molded polyethylene		
Dimensions			
Product Height	48 in / 1219 mm	48 in / 1219 mm	48 in / 1219 mm
Product Length	22.75 in / 578 mm	23.50 in / 597 mm	23.50 in / 597 mm
Product Weight	97 lb / 44 kg	97 lb / 44 kg	97 lb / 44 kg
Product Width	17 in / 403 mm	20 in / 510 mm	20 in / 510 mm
Productivity			
Max. Coverage (per hour)	2000 ft^2 / 185.8 m^2	3000 ft^2 / 278.7 m^2	3000 ft^2 / 278.7 m^2
Decibel Rating			
Rating at operator's position	60 dBA		71 dBA
Power Cord			
Length	50 ft / 15.24 m		
Power Cord Type	14 gauge, 3-wire, SJT		
Solution Delivery System (Optional)			
Tank Volume	3 gal / 11.36 L	3 gal / 11.36 L	3 gal / 11.36 L
Nominal Solution Flow Rate	.1 gpm / .38 L/min	.1 gpm / .38 L/min	.1 gpm / .38 L/min
Coverage Rate Per Tank	1000 ft^2 (92.9 m^2) / tank	1500 ft^2 (135.35 m^2) / tank	1500 ft^2 (135.35 m^2) / tank
Approvals	CSA, ETL		
Warranty	See your sales representative or authorized distributor for complete warranty details.		

*Specifications subject to change without notice

1400-21 02/10

©2010 Tennant and Nobles are registered trademarks of Tennant Company, whose products are sold and serviced through Tennant Sales and Service Company, as well as through distributors.

Tennant
701 North Lilac Drive
Minneapolis, MN
55440-1452, USA

800.553.8033
763.540.1200
In Quebec: 514.335.6061

www.tennantco.com
info@tennantco.com

3058

TENNANT

CREATING A CLEANER, SAFER, HEALTHIER WORLD.

EQUIPMENT



E5

COMPACT, LOW-PROFILE CARPET EXTRACTOR

- Carpet cleaning results with excellent deep cleaning technology
- Improve productivity and cleaning results in congested and hard-to-reach areas with low-profile, compact design
- Reduce operator fatigue and improve productivity with low-effort pull-back operation and Insta-Adjust™ ergonomic handle





E5
COMPACT, LOW-PROFILE CARPET EXRTACTOR

CLEANING SYSTEM

Cleaning path	15 in / 380 mm

BRUSH DRIVE SYSTEM

Brush motor	0.4 hp / 0.30 kW
Brush speed	1,200 rpm

SOLUTION SYSTEM

Solution tank capacity	5 gal / 19 L
Solution pump pressure	65 psi / 4.458 bar
Spray jet count	2-quick connect

RECOVERY SYSTEM

Recovery tank capacity	5 gal / 19 L
Waterlift	86 in / 2,180mm
Vacuum motor	1.2 hp / 0.89 kW

POWER SYSTEM

Power cord length	50 ft / 15 m

MACHINE SPECIFICATIONS

Length	27 in / 690 mm
Width	19 in / 480 mm
Height	28 in / 710 mm
Weight	102 lb / 46 kg
Sound level (operator's ear)	69 dBA

WARRANTY

See your local representative for warranty information.

Optional tools available.

Specifications subject to change without notice.

EXCEPTIONALLY POWERFUL DEEP CLEANING PERFORMANCE IN CONGESTED AREAS

OUTSTANDING CLEANING PERFORMANCE

Maximize cleaning performance across the entire cleaning path with dual overlapping spray jets and exceptional vacuum suction. Unique double-tuft float-adjust brush design adjusts to different carpet pile depths – no manual adjustment needed.

DEEP CLEAN AROUND AND UNDER OBSTACLES

Easily clean around and under objects like beds, desks, and tables with the compact, low-profile design. The Insta-Adjust™ handle extends cleaning reach.

EASY TO USE AND MAINTAIN

Easy to fill, empty, and clean Hygenic® tanks offer a unique compact design. Ergonomic handles and grips ensure easy pick-up.

SEEING IS BELIEVING

For a demonstration or additional information,
call +1.800.553.8033 or email info@tennantco.com

Tennant
701 North Lilac Drive
Minneapolis, MN 55422 USA

USA/Canada: +1.800.553.8033
Quebec: +1.800.361.9050
Overseas: +1.763.540.1315

www.tennantco.com
info@tennantco.com

1.025.001.am.en E5 Sell Sheet 4/13
©2013 The Tennant Company logo and other trademarks designated with the symbol "®" are trademarks of Tennant Company registered in the United States and/or other countries. Tennant Company's products are sold and serviced through subsidiaries of Tennant Company and distributors. All rights reserved.

3059A

CREATING A CLEANER, SAFER, HEALTHIER WORLD.

EQUIPMENT



T300/T300e ORBITAL

WALK-BEHIND FLOOR SCRUBBER

Delivering high performance and consistent results for virtually any hard surface condition while lowering cleaning costs

3059A

IMPROVE THE EFFECTIVENESS OF YOUR CLEANING RESOURCES, INVESTMENTS, AND OPERATIONS







REDUCE COST TO CLEAN

- **Reduce costs to clean** by virtually eliminating slippery floor stripping chemicals and postponing expensive and time consuming stripping.
- **Standardize your cleaning operations** with programmable Zone Settings™.
- **On-board machine instructions** help ensure machine is operated in a safe manner for better results, simplified training, and reduced costs to clean.
- **Increase runtime by up to 46%** with 2200 1/4" RPMs.*

ENHANCE FACILITY IMAGE

- **Easily clean textured and grouted floors** through consistent down pressure and multiple pad options.
- **Ensure consistent cleaning performance and full pad saturation** with unique solution disbursement system.
- **Reduce machine noise levels** to as low as 58 dBA for daytime cleaning and in sound sensitive areas with Quiet-Mode™.

IMPROVE HEALTH AND SAFETY

- **Minimize risk of slip-and-fall accidents** and ensure dirt and soils are removed from the floor with updated squeegee design.
- **Ensure operator comfort** and reduce vibrations with 10 long-lasting isolators.

MINIMIZE ENVIRONMENTAL IMPACT

- **Quickly and easily remove floor finish** with high RPMs, heavy down pressure, and surface prep pad without using caustic stripping chemicals.
- **Reduce water consumption** and disposal of cleaning detergents into the waste stream with ec-H2O NanoClean® technology.

*When compared to Tennant 20" (50 cm) self-propel disk machine.

3059A

SAVE TIME AND MONEY ON EQUIPMENT AND TRAINING WHILE IMPROVING YOUR FACILITY'S IMAGE

ONE MACHINE. MAXIMUM VERSATILITY.

Maximize your return on investment with the T300 or T300e Orbital scrubbing machine, ideal for daily cleaning or chemical-free floor finish removal for a wide variety of markets, applications and floor types.

MARKETS:
Education
Healthcare
Retail
Hospitality

APPLICATIONS:
Aisle Ways
Checkout Counters
Classrooms
Entryways
Cafeterias
Kitchens

FLOOR TYPES:
Uneven and Textured Floors
Grouted Ceramic and Porcelain Tile
VCT
Polished Stone
Marmoleum
Teknoflor®


Marmoleum®

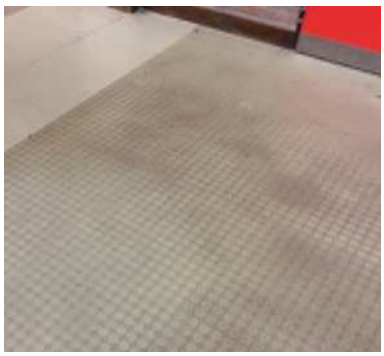
Textured Floor


Grouted Tile


Polished Stone

KEY OPTIONS

ec-H2O NanoClean® technology electronically converts water into an innovative detergent-free cleaning solution.

ec H2O® NanoClean

Tennant provides multiple cleaning pads to address a variety of cleaning conditions.



Effortlessly clean edges, corners and baseboards using rectangular cleaning head options.

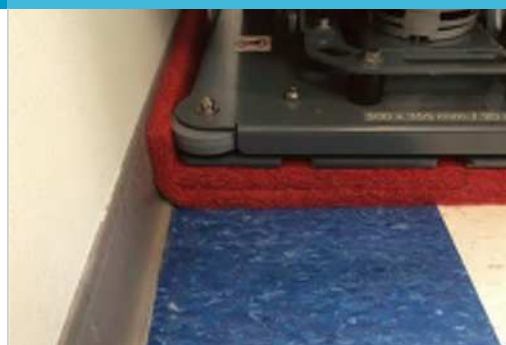

3059A

TENNANT*TRUE*® PARTS, SERVICE AND FINANCE SOLUTIONS

- Reduce rework, labor and safety costs by using only Tennant*True* parts and service.
- Ensure optimal cleaning performance by selecting a Tennant*True* Service program provided by a network of over 400 factory-trained Tennant service representatives.
- Improve uptime by leveraging Tennant*True* parts and service.
- Simplify budgeting by bundling Tennant*True* service plans, including parts, into the purchase or financing of your machine.

ENVIRONMENTAL STEWARDSHIP

ec-H2O NanoClean® technology is NFSI (National Floor Safety Institute) Certified

ec-H2O NanoClean technology is registered by NSF International

Lease. Pre-Owned. Rent. Tennant has flexible options that get you the machines you need, however you need them.

T300/T300e ORBITAL WALK-BEHIND FLOOR SCRUBBER

	T300 20 IN/500 MM SELF-PROPEL	T300e 20 IN/500 MM SELF-PROPEL
SCRUBBING SYSTEM		
Control panel		
Membrane™ Panel	Optional	–
Pro-Membrane™ Panel	Optional	–
Pro-Panel™	Optional	–
Instructional Overlay	–	Standard
Productivity (per hour)		
Theoretical Max	20,000 ft² / 1,858 m²	20,000 ft²/1,858 m²
Estimated Coverage*		
Conventional	14,943 ft² / 1,388 m²	14,943 ft²/1,388 m²
ec-H2O NanoClean®	15,469 ft² / 1,437 m²	15,469 ft²/1,437 m²
BRUSH DRIVE SYSTEM		
Scrub motor	0.6 hp / 0.45 kW	0.6 hp/0.45 kW
Brush/pad RPM	2,200 rpm	2,200 rpm
Brush/pad pressure	63, 92, 109 lbs / 29, 42, 49 kg	63 lbs/29 kg Optional 109 lbs/49 kg
SOLUTION/RECOVERY SYSTEM		
Solution tank capacity	11 gal / 42 L	11 gal/42 L
Recovery tank capacity	14 gal / 53 L	14 gal/53 L
Vacuum motor	24 VDC, 0.6 hp / 0.47 kW	24 VDC, 0.6 hp/0.37 kW
Vacuum waterlift	42 in / 1067 mm	34.5 in / 876 mm
Vacuum waterlift with Quiet-Mode™	28 in / 711 mm	–
CLEANING TECHNOLOGY		
Conventional	Standard	Standard
ec-H2O NanoClean	Optional	Optional
ec-H2O NanoClean with Severe Environment switch	Optional	–
BATTERY SYSTEM		
System voltage	24 volt	24 volt
Battery types (Wet 105AH, Wet 130AH, Wet 150AH, Sealed AGM 140AH)	2 required	2 required
Battery run time (up to hours)**	3.8	3.7
On-board charger	Standard	Standard
Off-board charger	Optional	Optional
MACHINE SPECIFICATIONS		
Length	49 in / 1,245 mm	49 in/1,245 mm
Width	20.5 in / 521 mm	20.5 in/521 mm
Height	43.10 in / 1,095 mm	43.10 in/1,095 mm
Weight (without batteries)	255 lbs / 116 kg	255 lbs/116 kg
Weight (with batteries)	415 lbs / 188 kg	415 lbs/188 kg
Sound level (operator's ear)***	66.4 dBA	67.5 dBA
Quiet-Mode (operator's ear)***	57.6 dBA	–

WARRANTY

See your local representative for warranty information

* Estimated coverage rates use the practical speed and empty/fill time standards from the 2004 ISSA Cleaning Times handbook.
** Run times are based on continuous scrubbing run times.
*** Sound levels per ISO 11201 as recommended by the American Association of Cleaning Equipment manufacturers & OSHA.

Specifications subject to change without notice.

SEEING IS BELIEVING

For a demonstration or additional information, call +1.800.553.8033 or email info@tennantco.com

Tennant
701 North Lilac Drive
Minneapolis, MN 55422 USA

USA/Canada: +1.800.553.8033
Quebec: +1.800.361.9050
Overseas: +1.763.540.1315

www.tennantco.com
info@tennantco.com

1.063.005.am.en T300 Orbital Brochure 11/16
©2016 The Tennant Company logo and other trademarks designated with the symbol "®" are trademarks of Tennant Company registered in the United States and/or other countries. Tennant Company's products are sold and serviced through subsidiaries of Tennant Company and distributors. All rights reserved.

3060

TENNANT

CREATING A CLEANER, SAFER, HEALTHIER WORLD.

EQUIPMENT



B5/B7

BATTERY POWERED WALK-BEHIND BURNISHER

- Ultra quiet machines – as low as 63 dBA – ensures safe sound levels
- Active filtration with HEPA standard – maintains indoor air quality
- 90 degree flip up head – enables a safe ergonomic position when changing pad







3060

B5/B7 BURNISHER

	B5		B7	
BURNISHING SYSTEM	20 IN / 510 MM PAD ASSIST	20 IN / 510 MM PROPEL	24 IN / 610 MM PROPEL	27 IN / 690 MM PROPEL
Path width	20 in / 510 mm		24 in / 610 mm	27 in / 690 mm
Productivity rate (max)	16,260 ft²/hr / 1,510 m²/hr	20,000 ft²/hr / 2,500 m²/hr	24,000 ft²/hr / 2,200 m²/hr	27,000 ft²/hr / 2,500 m²/hr
Productivity rate (practical) (2 in / 51 mm overlap)	13,500 ft²/hr / 1,260 m²/hr	18,000 ft²/hr / 1,670 m²/hr	22,000 ft²/hr / 2,000 m²/hr	25,000 ft²/hr / 2,300 m²/hr
PAD DRIVE SYSTEM				
Pad motor	36 V, 75 A, 2.8 hp max / 2.1 kW		36 V, 90 A, 3.6 hp max / 2.6 kW	
Pad speed	2100 rpm		1875 rpm	
Burnishing speed (variable)				
Min	Pad assist	100 fpm / 30 mpm	100 fpm / 30 mpm	
Max	Pad assist	200 fpm / 60 mpm	200 fpm / 60 mpm	
Transport speed (max)	—	240 fpm / 73 mpm	240 fpm / 73 mpm	
POWER SYSTEM				
Voltage	36 VDC		36 VDC	
Battery				
Wet/lead acid (standard)	3 - 12V, 185 Ah		6 - 6V, 240 Ah	6 - 6V, 330 Ah
AGM (optional)	3 - 12V, 234 Ah		6 - 6V, 312 Ah	
Wet/lead acid (optional)	3 - 12V, 225 Ah		6 - 6V, 360 Ah	
Battery run time*	185 Ah battery up to 2.0 hrs 225 Ah battery up to 2.5 hrs 234 Ah AGM battery up to 3.0 hrs		240 Ah battery up to 2.0 hrs 330 Ah battery up to 2.8 hrs 360 Ah battery up to 3.0 hrs — 312 Ah AGM battery up to 2.8 hrs	
On-board charger	Yes		Yes	
DUST CONTROL SYSTEM				
HEPA filtration	99.97% @ 0.3 microns		99.97% @ 0.3 microns	
Passive filtration (optional)	95% @ 0.3 microns		95% @ 0.3 microns	
MACHINE SPECIFICATIONS				
Length	59 in / 1,499 mm		61.5 in / 1562 mm	63 in / 1600 mm
Width	24.5 in / 622 mm		30 in / 762 mm	31.5 in / 800 mm
Height	43 in / 1,092 mm		43 in / 1,092 mm	
Weight (with batteries)	507 lbs / 230 kg	572 lbs / 259 kg	616 lb / 279 kg	797 lb / 362 kg
Sound level (operator's ear)				
Active	64 dBA		63 dBA	
Passive	65 dBA		65 dBA	
APPROVALS				
ETL listed (U.S./Canada only)	Yes		Yes	
WARRANTY				

See your local representative for warranty information.

*Runtimes will vary depending upon battery size and feature set. These factors can include functions such as push vs. self-propel, passive vs. active dust control, low vs. high down pressure and pad selection.

Specifications subject to change without notice.

Choose GE Capital or U.S. Bancorp, our leasing providers, for simple, quick financing with flexible upgrade options.

SEEING IS BELIEVING

For a demonstration or additional information, call +1.800.553.8033 or email info@tennantco.com

Tennant
701 North Lilac Drive
Minneapolis, MN 55422 USA

USA/Canada: +1.800.553.8033
Quebec: +1.800.361.9050
Overseas: +1.763.540.1315

www.tennantco.com
info@tennantco.com

1.059.001.am.en B5/B7 Sell Sheet 1/15
©2015 The Tennant Company logo and other trademarks designated with the symbol "®" are trademarks of Tennant Company registered in the United States and/or other countries. Tennant Company's products are sold and serviced through subsidiaries of Tennant Company and distributors. All rights reserved.

Rubbermaid Commercial Products

Waste > null

3540-60 Slim Jim® with Venting Channels



Features innovative patent-pending solutions that increase efficiency and improve worker well-being.

- Integrated, patent-pending venting channels take the strain out of liner removal.
- Space-saving profile fits virtually anywhere.
- Four patent-pending can liner cinches improve productivity.
- Molded-in handles and base grips make lifting and emptying easier.
- Available with Universal Recycling Symbol, SKU# 3540-07.
- Custom imprinting available; contact Rubbermaid Customer Service at (800) 347-9800 for details.

AVAILABLE COLORS

Order #	Color	Product UPC/ UCC Code
FG354060 GRAY	GRAY	086876186376 / 10086876186373
FG354060 BLA	BLA	086876186352 / 10086876186359
FG354060 BEIG	BEIG	086876186369 / 10086876186366

Gray
GRAY

Black
BLA

Beige
BEIG

SPECIFICATIONS

	U.S.	Metric
Length:	22 in	55.9 cm
Width:	11 in	27.9 cm
Height:	30 in	76.2 cm
Volume Capacity [Nom]:	23 gal	87.1 L
Volume Capacity [Max]:		
Volume Capacity [Min]:		
Carton Length:	22 in	55.9 cm
Carton Width:	11 in	27.9 cm
Carton Height:	49 1/2 in	125.7 cm
Carton Cube:	6.93 ft3	0.20 m3
Ship Weight/Carton:	30.60 lb	13.88 kg

Pack Quantity: 4
Cartons Per Pallet: 8

ADDITIONAL INFORMATION:

Product Sell Sheets: RCP_SM700_SlimJimVentingChannels.pdf
Chemical Resistance Guide: chem.pdf

Products in Slim Jim® with Venting Channels

Item #	Description	Length	Width	Height	Volume Capacity
3540-60	Slim Jim® with Venting Channels	22 in	11 in	30 in	23 gal

Accessories for 3540-60:

No.	Description
2688-88	Slim Jim® Handle Top for Slim Jim® Containers
2692-88	Slim Jim® Bottle and Can Recycling Top for Slim Jim® Containers
2703-88	Slim Jim® Paper Recycling Top for Slim Jim® Containers
9W16	Slim Jim® Confidential Document Container Lids for 3540, 3541 Containers
2673-60	Slim Jim® Swing Lid for Slim Jim® Containers
2674	Slim Jim® Hinge Lid for Slim Jim® Containers
3553	Slim Jim® Stainless Steel Dolly for Slim Jim® Containers

3540-60 is an Accessory to:

No.	Description	Length	Height	Width
9T45	StockMate® ES Restocking Truck with Hinging Deck	63 in	19 1/4 in	19 1/4 in
9T50	StockMate® Restocking Truck, Standard Deck	63 in	33 5/8 in	19 1/8 in
9T79	Double Capacity Cleaning Cart	51 3/4 in	44 in	22 in
9T52	StockMate® Restocking Truck, Standard Deck with Cardboard Management System, Polyurethane Wheel and Casters	63 in	64 1/4 in	18 in
9T56	StockMate® Restocking Truck, Utility Deck, Olefin Wheels and Casters	63 in	64 1/4 in	18 in
9T72	High Capacity Cleaning Cart	49 3/4 in	38 3/8 in	21 3/4 in
9T73	Rubbermaid HYGEN™ Microfiber Cleaning Cart	48 1/4 in	44 in	22 in
9T74	Rubbermaid HYGEN™ Microfiber Cleaning Cart with Color-Coded Pails	48 1/4 in	44 in	22 in
9T75	High Security Cleaning Cart	48 1/4 in	53 1/2 in	22 in
9T76	Compact Folding Housekeeping Cart	51 3/4 in	44 in	22 in
9T77	Turndown Housekeeping Cart	38 1/4 in	44 in	22 in
9T78	High Security Housekeeping Cart	51 3/4 in	53 1/2 in	22 in
9W71	Mega BRUTE® Mobile Waste Collector - 3 Pack	52 1/2 in	42 1/2 in	27 1/2 in
9W73	Mega BRUTE® Mobile Waste Collector - 1 Pack	52 1/2 in	42 1/2 in	27 1/2 in
9T92	Triple Capacity Cleaning Cart	51 3/4 in	44 in	22 in
9T94	Deluxe Paneled Compact Housekeeping Cart	38 1/4 in	44 in	22 in
9T95	Deluxe Paneled Housekeeping Cart	51 3/4 in	53 1/2 in	22 in

Consumables/Replacement Parts for 3540-60

No.	Fits	Description
5009-88	3540-60	Linear Low Density Can Liners

Work Smarter.

Rubbermaid Commercial Products, LLC
3124 Valley Avenue, Winchester, VA 22601
www.rcpworksmarter.com

3063 & 3063a

50 GALLON ROLL OUT WASTE CONTAINERS; AVAILABLE IN GRAY & BLUE



Model 1971962



Model FG9W2773BLUE

Rubbermaid Brute® Recycling Rollout Container 50 Gallon, Rubbermaid 1971962 & FG9W2773BLUE
Ideal for central collection, transporting and shipping recyclable waste with heavy duty construction and convenient features. Large capacity saves labor and reduces collection costs. Heavy-duty 8" wheels maneuver easily, even over steps or curbing and feature a rugged, molded-in axle retainer for strength. The attached hinged lid fits tightly and locks open for easy emptying. Tough durable construction provides long life. Rounded corners and smooth contours are easy to clean. This recycling container is blue imprinted with *We Recycle* to keep non recyclables out and avoid messy sorting. Contains Post Consumer Recycled Resin (PCR) exceeding EPA guidelines.

Product Specifications

- **WIDTH INCHES**23-2/5
- **DEPTH INCHES**28-1/2
- **HEIGHT INCHES**36-1/2
- **COLOR FINISH**Blue Or Gray
- **ASSEMBLY**Assembled
- **CONSTRUCTION**Plastic
- **MANUFACTURERS PART NUMBER**FG9W2773BLUE
- **MODEL**705622
- **TYPE**Brute Recycling Rollout w/Lid
- **WEIGHT LBS**27.1
- **CAPACITY GALLONS**50
- **BRAND**Rubbermaid® Commercial

**NOTE: THESE UNITS ARE AVAILABLE IN 65 GALLON; COLORS ARE GRAY & RED*

SOURCE: https://www.globalindustrial.com/searchResult?searchBox=&q=1971962

Commercial Products

BRUTE®



STEP RIGHT UP

TO GET THINGS DONE FASTER

Commercial Products
BRUTE

BRUTE STEP-ON ROLLOUT WITH CASTERS

	DESCRIPTION	ITEM #	COLOR	PRODUCT WEIGHT (LB)	L (IN)	W (IN)	H (IN)
32 GALLON	BRUTE 32G STEP-ON ROLLOUT WITH CASTERS	1971950	GRAY	22.20	28.56"	20.62"	37.16"
	BRUTE 32G STEP-ON ROLLOUT WITH CASTERS	1971952	BLUE	22.20	28.56"	20.62"	37.16"
50 GALLON	BRUTE 50G STEP-ON ROLLOUT WITH CASTERS	1971962	GRAY	30.00	30.08"	24.00"	39.58"
	BRUTE 50G STEP-ON ROLLOUT WITH CASTERS	1971964	BLUE	30.00	30.08"	24.00"	39.58"
65 GALLON	BRUTE 65G STEP-ON ROLLOUT WITH CASTERS	1971974	GRAY	37.00	32.33"	25.33"	44.74"
	BRUTE 65G STEP-ON ROLLOUT WITH CASTERS	1971976	BLUE	37.00	32.33"	25.33"	44.74"
95 GALLON	BRUTE 95G STEP-ON ROLLOUT WITH CASTERS	1971997	GRAY	46.00	37.15"	28.60"	46.02"
	BRUTE 95G STEP-ON ROLLOUT WITH CASTERS	1971999	BLUE	46.00	37.15"	28.60"	46.02"

COLORS AVAILABLE:



BRUTE STEP-ON ROLLOUT

	DESCRIPTION	ITEM #	COLOR	PRODUCT WEIGHT (LB)	L (IN)	W (IN)	H (IN)
32 GALLON	BRUTE 32G STEP-ON ROLLOUT	1971944	GRAY	19.20	28.56"	20.62"	37.16"
	BRUTE 32G STEP-ON ROLLOUT	1971946	BLUE	19.20	28.56"	20.62"	37.16"
50 GALLON	BRUTE 50G STEP-ON ROLLOUT	1971956	GRAY	27.00	30.08"	24.00"	39.58"
	BRUTE 50G STEP-ON ROLLOUT	1971958	BLUE	27.00	30.08"	24.00"	39.58"
65 GALLON	BRUTE 65G STEP-ON ROLLOUT	1971968	GRAY	35.50	32.33"	25.33"	44.74"
	BRUTE 65G STEP-ON ROLLOUT	1971970	BLUE	35.50	32.33"	25.33"	44.74"
95 GALLON	BRUTE 95G STEP-ON ROLLOUT	1971991	GRAY	40.00	37.15"	28.60"	46.02"
	BRUTE 95G STEP-ON ROLLOUT	1971993	BLUE	40.00	37.15"	28.60"	46.02"

COLORS AVAILABLE:



BRUTE ROLLOUT WITH CASTERS

	DESCRIPTION	ITEM #	COLOR	PRODUCT WEIGHT (LB)	L (IN)	W (IN)	H (IN)
32 GALLON	BRUTE 32G ROLLOUT WITH CASTERS	1971947	GRAY	20.70	28.56"	20.62"	37.16"
	BRUTE 32G ROLLOUT WITH CASTERS	1971949	BLUE	20.70	28.56"	20.62"	37.16"
50 GALLON	BRUTE 50G ROLLOUT WITH CASTERS	1971959	GRAY	29.00	30.08"	24.00"	39.58"
	BRUTE 50G ROLLOUT WITH CASTERS	1971961	BLUE	29.00	30.08"	24.00"	39.58"
65 GALLON	BRUTE 65G ROLLOUT WITH CASTERS	1971971	GRAY	36.00	32.33"	25.33"	44.74"
	BRUTE 65G ROLLOUT WITH CASTERS	1971973	BLUE	36.00	32.33"	25.33"	44.74"
95 GALLON	BRUTE 95G ROLLOUT WITH CASTERS	1971994	GRAY	44.00	37.15"	28.60"	46.02"
	BRUTE 95G ROLLOUT WITH CASTERS	1971996	BLUE	44.00	37.15"	28.60"	46.02"

BRUTE MEDICAL WASTE ROLLOUT WITH CASTERS

Locking lids help keep regulated medical waste secure.

	DESCRIPTION	ITEM #	COLOR	PRODUCT WEIGHT (LB)	L (IN)	W (IN)	H (IN)
65 GALLON	BRUTE 65G MEDICAL WASTE ROLLOUT WITH CASTERS	1971977	RED	36.00	32.33"	25.33"	44.74"
95 GALLON	BRUTE 95G MEDICAL WASTE ROLLOUT WITH CASTERS	1972000	RED	44.00	37.15"	28.60"	46.02"

COLORS AVAILABLE:

COLORS AVAILABLE:



BRUTE STANDARD ROLLOUT

	DESCRIPTION	ITEM #	COLOR	PRODUCT WEIGHT (LB)	L (IN)	W (IN)	H (IN)
32 GALLON	BRUTE 32G STANDARD ROLLOUT	1971941	GRAY	17.00	28.56"	20.62"	37.16"
	BRUTE 32G STANDARD ROLLOUT	1971943	BLUE	17.00	28.56"	20.62"	37.16"
50 GALLON	BRUTE 50G STANDARD ROLLOUT	FG9W2700GRAY	GRAY	25.00	30.08"	24.00"	39.58"
	BRUTE 50G STANDARD ROLLOUT	FG9W2700BLUE	BLUE	25.00	30.08"	24.00"	39.58"
65 GALLON	BRUTE 65G STANDARD ROLLOUT	FG9W2100GRAY	GRAY	33.50	32.33"	25.33"	44.74"
	BRUTE 65G STANDARD ROLLOUT	FG9W2173BLUE	BLUE	33.50	32.33"	25.33"	44.74"
95 GALLON	BRUTE 95G STANDARD ROLLOUT	FG9W2200GRAY	GRAY	38.50	37.15"	28.60"	46.02"
	BRUTE 95G STANDARD ROLLOUT	FG9W2273BLUE	BLUE	38.50	37.15"	28.60"	46.02"

COLORS AVAILABLE:



Rubbermaid
Commercial Products

3065B

Commercial Dryer/ Air Mover



Compact, stackable three-speed air mover dries areas quickly.

Powerful airflow
Reduce drying time dramatically with this powerful three-speed air mover.

Reduce storage space
Convenient, stackable units free up valuable space in closets, storage areas and transport vehicles.

Ease of use
Optional wheeled hand cart for easy transportation and handling.

Key Benefits

- Quickly dry carpet, hard floors, fresh paint, concrete sealer and much more.
- This unit can be placed in three positions, which allows for optimal directional airflow.
- Designed to be both stackable and lightweight for improved ease of use and storage. Optional wheeled hand cart available (Part #9014821).

1150-13 10/16

©2016 The Tennant and Nobles logos and other marks designated with the symbol "®" are registered trademarks of Tennant Company, Inc., in the United States and/or other countries. The marks designated with "TM" are trademarks of Tennant Company that are not yet registered in the United States. All rights reserved.

Tennant
701 North Lilac Drive
Minneapolis, MN 55422
USA

800.553.8033
763.540.1200
In Quebec: 800.361.9050

www.tennantco.com
info@tennantco.com

3065B



Commercial Dryer/ Air Mover

Features	Specifications*
Product Name	Commercial Dryer/Air Mover
Blower System	
Blower motor HP	0.6 hp / 522 Watt
Blower motor amps	4.35 amps at top speed
Blower motor switch	Rotary
Blower motor volts	120 V / 60 Hz
Blower motor speeds	(3) three speeds
Maximum air movement	1350 cfm (710 rpm / 1105 rpm / 1550 rpm)
Chassis and Body Construction	
Chassis construction	Blown polyethylene
Metal parts coating	Epoxy powder coated, acrylic paint or nickel/zinc plated, green Phenolic paint
Features	Stackable, three positions using kickstand, optional wheel hand cart (Part #9014821)
Dimensions/Weight	
Height	18.5 in / 47 cm
Width	15 in / 38.1 cm
Length	18 in / 45.7 cm
Weight	22.5 lb / 10.2 kg
Power Cord	
Length	18.5 ft / 5.6 m
Protection Grade	IP20
Sound Pressure level	69 dBA
Approval	UL
Warranty	See your sales representative or authorized distributor for complete warranty details.

*Specifications subject to change without notice

Note: All 120V models will come with a dual Tennant/Nobles decal

1150-13 10/16

©2016 The Tennant and Nobles logos and other marks designated with the symbol "®" are registered trademarks of Tennant Company, Inc., in the United States and/or other countries. The marks designated with "TM" are trademarks of Tennant Company that are not yet registered in the United States. All rights reserved.

Tennant
701 North Lilac Drive
Minneapolis, MN 55422
USA

800.553.8033
763.540.1200
In Quebec: 800.361.9050

www.tennantco.com
info@tennantco.com

3072

55 GALLON CONTAINER WITH LID AND DOLLY

FOR USE IN CADAVER STORAGE



RUBBERMAID FG265500GRAY SPECS	
Height	33 Inches
Bottom Diameter	20 1/2 Inches
Top Diameter	26 1/2 Inches
Capacity	55 Gallons
Color	Gray
Lid Type	No Lid
Made in America	Yes
Material	Heavy Duty Plastic
NSF Listed	Yes
Shape	Round
Type	Trash Cans

SOURCE: https://www.webstaurantstore.com/rubbermaid-fg265500gray-brute-gray-55-gallon-trash-can/690FG2655GY.html

ITEM IU55TMA: TIGHT HEAD SEAMLESS STAINLESS



Skolnik Seamless Stainless Steel Drums provide a UN rated solution for situations requiring the secure, crevice free containment of UN rated Dangerous Goods or other materials. The seamless structure prevents the cultivation or build-up of bacteria or other contaminants that could affect your materials. Particularly useful in the chemical and pharmaceutical industries, these drums feature machined weld-in flanges as well as other optional features perfect for the shipping and storage of UN rated Dangerous Goods, Nitric Acid, or other materials that require seamless or crevice-free packaging.

Our Seamless, Stainless Steel Drums outperform carbon steel drums in corrosion resistance, tensile strength and reusability. These Skolnik Stainless Steel Drums are UN rated for liquids and are available in stainless type 304. No one else makes seamless drums to our exacting standards.

Part Number	IU55TMA
Volume	55 US Gallons
Style	Tight Head
Material	304 Stainless Steel
UN Solid	N/A
UN Liquid	1A1/X2.0/600
Thickness (tp/bd/bt)	1.5/1.5/1.5
Fittings and/or Gasket	Teflon
Closure	2" x 3/4" Machined
Exterior Color	N/A
Interior Color	N/A
Weight	63.00 Lbs
Inside Diameter	22.50 Inches
Inside Height	32.80 Inches

Skolnik Industries, Inc.
4900 S. Kilbourn Avenue
Chicago, IL 60632-4593 USA

1.800.441.8780 CUSTOMER SERVICE
1.773.735.0700 MAIN OFFICE
1.800.441.8780 OUTSIDE U.S.
1.773.735.7257 FAX

skolnik.com
skolnikwine.com
sales@skolnik.com

Rubbermaid®
Commercial Products

WAVEBRAKE®

THE NEW GENERATION WAVEBRAKE®





UP TO 80% LESS SPLASH[1]

Patented WaveBrake® baffles result in less splashing while mopping and maneuvering, helping to create a safer environment for patrons and staff.



EASY TO EMPTY

A built-in drain eliminates the strain of lifting and bending when emptying mop buckets. Integrated handles help ensure a secure grip to lift and empty the mop bucket.



5-YEAR WRINGER GUARANTEE[2]

The side-press and down-press wringers are designed to last 5 years or 200,000 wringing cycles.

[1] Versus competitive 35Qt U.S. single compartment mop bucket and wringer, not including divider bucket and accessories. [2] Based on internal side-press testing.

WAVEBRAKE® SIDE-PRESS BUCKET AND WRINGER

	DESCRIPTION	ITEM #	COLOR	CASE QTY
26-QUART	26-QT WAVEBRAKE® SIDE-PRESS BUCKET AND WRINGER	FG748000YEL	YELLOW	1
35-QUART	35-QT WAVEBRAKE® SIDE-PRESS BUCKET AND WRINGER	FG758088YEL	YELLOW	1
	35-QT WAVEBRAKE® SIDE-PRESS BUCKET AND WRINGER	FG758088BRN	BROWN	1
	35-QT WAVEBRAKE® SIDE-PRESS BUCKET AND WRINGER	FG758888BLUE	BLUE	1
	35-QT WAVEBRAKE® SIDE-PRESS BUCKET AND WRINGER	FG758888RED	RED	1
	35-QT WAVEBRAKE® SIDE-PRESS BUCKET AND WRINGER	FG758888GRN	GREEN	1
	35-QT WAVEBRAKE® SIDE-PRESS BUCKET AND WRINGER, EXECUTIVE SERIES	1863896	BLACK	1
	35-QT WAVEBRAKE® SIDE-PRESS BUCKET AND WRINGER WITH DRAIN	2031764	YELLOW	1
44-QUART	44-QT WAVEBRAKE® SIDE-PRESS BUCKET AND WRINGER WITH DRAIN	FG618688YEL	YELLOW	1

WAVEBRAKE® DOWN-PRESS BUCKET AND WRINGER

35-QUART	35-QT WAVEBRAKE® DOWN-PRESS BUCKET AND WRINGER	FG757788YEL	YELLOW	1
	35-QT WAVEBRAKE® DOWN-PRESS BUCKET AND WRINGER	FG757788BRN	BROWN	1
	35-QT WAVEBRAKE® DOWN-PRESS BUCKET AND WRINGER	FG757888BLUE	BLUE	1
	35-QT WAVEBRAKE® DOWN-PRESS BUCKET AND WRINGER	FG757888RED	RED	1
	35-QT WAVEBRAKE® DOWN-PRESS BUCKET AND WRINGER	FG757888GRN	GREEN	1
	35-QT WAVEBRAKE® DOWN-PRESS BUCKET AND WRINGER, EXECUTIVE SERIES	1863898	BLACK	1
44-QUART	44-QT WAVEBRAKE® DOWN-PRESS BUCKET AND WRINGER WITH DRAIN	FG757688YEL	YELLOW	1

WAVEBRAKE® INSTITUTIONAL BUCKET AND WRINGER

35-QUART	35-QT WAVEBRAKE® INSTITUTIONAL BUCKET AND SIEVE WRINGER	FG759088YEL	YELLOW	1
	35-QT WAVEBRAKE® INSTITUTIONAL BUCKET AND WRINGER (WITHOUT SPRING AND BAIL)	FG757900YEL	YELLOW	1

WAVEBRAKE® BUCKET AND CASTERS

26-QUART	26-QT WAVEBRAKE® BUCKET AND CASTERS	2064996	YELLOW	4
35-QUART	35-QT WAVEBRAKE® BUCKET AND CASTERS	2064914	YELLOW	4
	35-QT WAVEBRAKE® BUCKET AND CASTERS	2064906	BROWN	4
	35-QT WAVEBRAKE® BUCKET AND CASTERS	2064904	BLUE	4
	35-QT WAVEBRAKE® BUCKET AND CASTERS	2064910	RED	4
	35-QT WAVEBRAKE® BUCKET AND CASTERS	2064916	GREEN	4
	35-QT WAVEBRAKE® BUCKET AND CASTERS, EXECUTIVE SERIES	2064909	BLACK	4
	35-QT WAVEBRAKE® BUCKET AND CASTERS WITH DRAIN	2031763	YELLOW	1

WAVEBRAKE® WRINGER

SIDE-PRESS	WAVEBRAKE® SIDE-PRESS WRINGER	2064915	YELLOW	2
	WAVEBRAKE® SIDE-PRESS WRINGER	2064885	BROWN	2
	WAVEBRAKE® SIDE-PRESS WRINGER	2064888	BLUE	2
	WAVEBRAKE® SIDE-PRESS WRINGER	2064884	RED	2
	WAVEBRAKE® SIDE-PRESS WRINGER	2064912	GREEN	2
	WAVEBRAKE® SIDE-PRESS WRINGER, EXECUTIVE SERIES	2064960	BLACK	2
DOWN-PRESS	WAVEBRAKE® DOWN-PRESS WRINGER	2064959	YELLOW	2
	WAVEBRAKE® DOWN-PRESS WRINGER	2065003	BROWN	2
	WAVEBRAKE® DOWN-PRESS WRINGER	2064999	BLUE	2
	WAVEBRAKE® DOWN-PRESS WRINGER	2065001	RED	2
	WAVEBRAKE® DOWN-PRESS WRINGER	2064953	GREEN	2
	WAVEBRAKE® DOWN-PRESS WRINGER, EXECUTIVE SERIES	2064994	BLACK	2

WAVEBRAKE® DIRTY WATER BUCKET

35-QUART	35-QT WAVEBRAKE® DIRTY WATER BUCKET	2064907	RED	6
	35-QT WAVEBRAKE® DIRTY WATER BUCKET	2064908	YELLOW	6
	35-QT WAVEBRAKE® DIRTY WATER BUCKET	2064905	GRAY	6

Rubbermaid® Commercial Products

WAVEBRAKE®

©2018 Rubbermaid Commercial Products LLC
8900 Northpointe Executive Park Drive, Huntersville, NC 28078
To see our complete range of cleaning solutions visit our online catalog at **RubbermaidCommercial.com**

Generated 02/07/2019



Safety Data Sheet Documents

No SDS content is available for this product.

Multipurpose Sharps Containers
CONTAINER, SHARPS, 2 GAL., RED, WALL / FREE

- These containers are designed for use in restricted access areas
- Nestable containers save space and help reduce shipping costs
- Non-tortuous lid design accommodates a variety of sharps sizes
- Horizontal drop maximizes use of container volume
- Containers lock for final disposal and safe transport
- Brackets available to mount containers to wall and free up counter space

Packaging	**20 Each / Case**
Manuf / Supplier	**Medline**
Manuf / Supplier #	**MDS705202**

SKU **MDS705202**

Specifications

COLOR	Red
CONTAINER TYPE	Sharps/Biohazard Container
COUNTER BALANCED LID	No
HPIS CODE	460_70_0_0
LATEX FREE	Yes
LID COMPATIBILITY	Yes
NESTED	Yes
PRODUCT SIZE	2 Gallon
SIZE	8 qt us
SIZE_GALLON	2 Gallon
TORTUOUS LID	No
UNSPSC	42142531
UNIT COMPATIBILITY	Mds707963 Locking Bracket

Unit of Measure	Conversion	Net/Gross Weight (lbs)	Volume (cubic ft)	Shipping Dimensions (inch) L x W x H	GTIN
Each **(EA)**	1.0 Each	0.0 / 0.9	0.145	6.305 x 6.305 x 6.305	10080196282616
Case (CS)	**20.0 Each**	**0.0 / 21.517**	**3.42**	**16.8 x 20.1 x 17.5**	**40080196282617**

HCPCS Information

HCPCS Code: NO CODE - PRODUCT DOES NOT MEET HCPCS SPECIFICATIONS

HCPCS Disclaimer: HCPCS codes and Home Health Consolidated Billing codes provided by Medline are intended as general guidelines only. Medline does not guarantee coverage or reimbursement of any products. You must address all coverage and reimbursement issues (including the correctness and accuracy of codes) with your individual payers. It is your responsibility to ensure the accuracy and appropriateness of each claim you submit, in accordance with all applicable payer requirements.



Safety Data Sheet Documents

No SDS content is available for this product.

Sharps Container Accessories
BRACKET, NONLOCKING, F / 1&2 GAL SHARPS

- Wall brackets and cabinets are available to free up counter space
- Rolling carts are also available for convenient transport (carts only; containers sold separately)

Packaging	**5 Each / Case**
Minimum Order Quantity	**5 CS**
Manuf / Supplier	**Medline**
Manuf / Supplier #	**MDS707021**

SKU **MDS707021**

Specifications

ALARMED	No
CABINET TYPE	Non Locking
HPIS CODE	460_10_0_0
LATEX FREE	Yes
LOCK	No
UNSPSC	42192404
UNIT COMPATIBILITY	Mds705201, Mds705202 Container

Unit of Measure	Conversion	Net/Gross Weight (lbs)	Volume (cubic ft)	Shipping Dimensions (inch) L x W x H	GTIN
Each (**EA**)	1.0 Each	0.0 / 0.628	0.275	10.0 x 6.5 x 7.313	10080196318537
Case (CS)	**5.0 Each**	**0.0 / 4.409**	**0.634**	**11.811 x 10.236 x 9.055**	**40080196318538**

HCPCS Information

HCPCS Code:

HCPCS Disclaimer: HCPCS codes and Home Health Consolidated Billing codes provided by Medline are intended as general guidelines only. Medline does not guarantee coverage or reimbursement of any products. You must address all coverage and reimbursement issues (including the correctness and accuracy of codes) with your individual payers. It is your responsibility to ensure the accuracy and appropriateness of each claim you submit, in accordance with all applicable payer requirements.

3088a



1 Gallon Covidien Sharps Container

Disposable container designed for the collection of sharps waste. Sliding lid allows easy disposal. Can be wall mounted or used on countertop. This product is available as single containers or as cases of 32 containers.

Dimensions: 7"x10.25"x6"
Brand: Covidien
Count: 1 Container
Capacity: 1 Gallon
Opening Type: Sliding
Lid: Opaque White
Features: Best Sellers

SKU**# 4801**

SOURCE: https://store.stericycle.com/1-gallon-covidien-sharps-container/4801-p

3088b

5 QT SHARPS CONTAINER WITH FLIP TOP & SECURITY BASKET FOR WALL MOUNT



Safe, disposable container for needles, syringes, lancets, razors and sharp objects.

- Recommended for warehouses, medical facilities, schools and rest areas.
- Lid automatically closes when full.
- Fits Wall Mount Cabinet and Wire Basket.
- When full, properly dispose of container. Not for disposal in landfills.

SOLD IN CARTON QUANTITIES

MODEL NO.	SIZE	DESCRIPTION	QTY./ CTN.	PRICE PER CARTON	
				1	2+
S-15308	5-Quart	Container	5	$42	$37

Secure 5-Quart Container in sturdy lockable metal wire basket.

- Space saver; frees up counter space.
- Heavy-duty metal wire construction.
- Includes key.
- Sharps Containers sold separately.

SOLD IN CARTON QUANTITIES

MODEL NO.	SIZE	DESCRIPTION	QTY./ CTN.	PRICE PER CARTON	
				1	2+
S-16089	5-Quart	Wire Basket	1	$37	$33

SOURCE: https://www.uline.com/BL_6712/Sharps-Containers

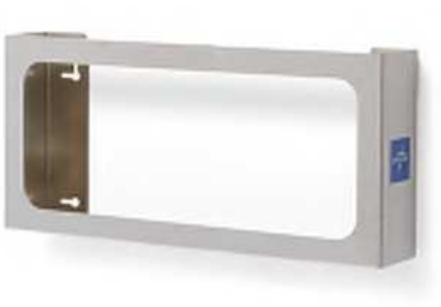

Safety Data Sheet Documents

No SDS content is available for this product.

Stainless Steel Glove Dispensers
HOLDER, GLOVE-BOX, SS, QUAD

- Stainless steel glove box holders are wall mountable, horizontal or vertical
- Available in different sizes
- Direct item, non-returnable
- Please note, item MDS193095V can only be mounted vertically

Packaging	**4 Each / Case**
Manuf / Supplier	**Medline**
Manuf / Supplier #	**MDS194095B**

SKU **MDS194095B**

Specifications

DISPENSER TYPE	Glove
HPIS CODE	450_50_0_0
HOLDING QTY	Quad
LATEX FREE	Yes
MATERIAL	Stainless Steel
UNSPSC	41103406

Unit of Measure	Conversion	Net/Gross Weight (lbs)	Volume (cubic ft)	Shipping Dimensions (inch) L x W x H	GTIN
Each (**EA**)	1.0 Each	0.0 / 3.5	0.331	0.0 x 0.0 x 0.0	10884389108154
Case (CS)	**4.0 Each**	**0.0 / 14.0**	**1.324**	**26.0 x 11.0 x 8.0**	**40884389108155**

HCPCS Information

HCPCS Code: NO CODE - PRODUCT DOES NOT MEET HCPCS SPECIFICATIONS

HCPCS Disclaimer: HCPCS codes and Home Health Consolidated Billing codes provided by Medline are intended as general guidelines only. Medline does not guarantee coverage or reimbursement of any products. You must address all coverage and reimbursement issues (including the correctness and accuracy of codes) with your individual payers. It is your responsibility to ensure the accuracy and appropriateness of each claim you submit, in accordance with all applicable payer requirements.

BOBRICK

Technical Data

SURFACE MOUNTED ROLL-PAPER-TOWEL DISPENSER

B-72860

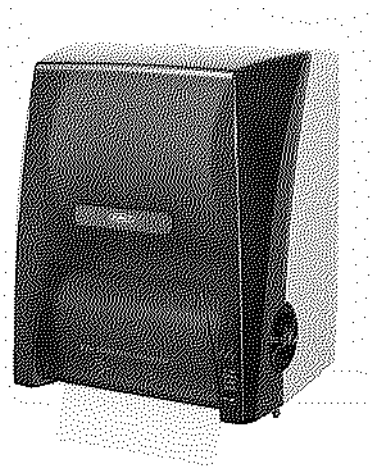

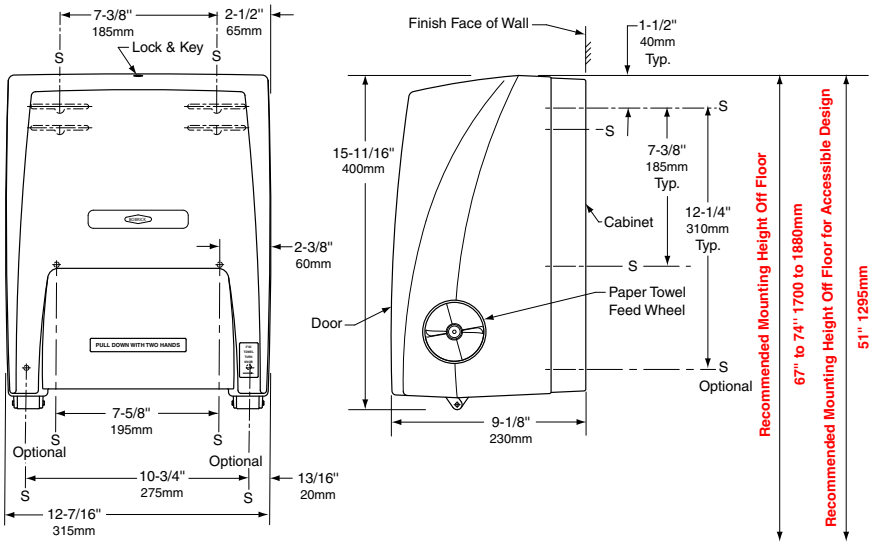

MATERIALS:

Door and Housing — Durable, high-impact resin materials. Door is translucent dark grey with high-gloss finish on exposed surfaces and is secured to light grey Housing with stainless steel hinge pins at bottom and keyed lock at top. Door may be opened with removable or permanent keys provided. Additional "permanent" snap-in key supplied for use in non-vandal-prone installations.

Roll-Paper-Towel Mechanism — Durable, high-impact resin materials. Accepts standard-core rolls up to 8" (205mm) wide, 8" (205mm) diameter. Dispenses one 12" (305mm) length of towel per pull. Accommodates up to 3-1/2" (90mm) diameter stub roll with automatic transfer to full roll.

OPERATION:

Touch-Free pull towel dispensing mechanism dispenses one 12" (300mm) length of towel per pull and operates smoothly and quietly. User only touches the paper. Exterior paper towel feed wheel available for use when filling dispenser and for user to advance paper should it become necessary to feed paper through dispenser. Automatic transfer dispenses stub roll before new roll is dispensed. When stub roll is depleted, advancement of paper towel feed wheel allows the main roll to start dispensing without the need to open the dispenser. Dispenser accommodates up to 8" (205mm) wide, 8" (205mm) diameter, non-perforated paper towel rolls and dispenses with less than 5 pounds of force (22.2 N) to comply with barrier-free accessibility guidelines (including ADAAG in U.S.A.).

INSTALLATION:

Mount unit on wall with four sheet-metal screws, furnished by manufacturer, at points indicated by an *S*. Optional mounting screw locations available, at installer's discretion. Mounting template available on exterior of carton end. For plaster or drywall construction, provide concealed backing to comply with local building codes, then secure unit with sheet-metal screws. For other wall surfaces, use wall anchors, furnished by manufacturer, for use with sheet metal screws, or provide 1/8" (3mm) toggle bolts or expansion shields (not furnished) for use with machine screws.

SPECIFICATION:

Surface-mounted roll-paper-towel dispenser shall have durable, high-impact, dark translucent grey resin door with high-gloss finish on exposed surfaces and durable, high-impact, light grey resin housing with matte finish. Door shall be secured to housing with two stainless steel hinge pins and keyed lock. Door shall have lock which is opened with removable or permanent key. Towel mechanism accommodates up to 8" (205mm) wide, 8" (205mm) diameter, non-perforated paper towel rolls. Touch-Free pull towel mechanism dispenses one 12" (305mm) length of towel per pull. User only touches the paper. Automatic transfer shall dispense stub roll up to 3-1/2" (90mm) diameter before new roll is dispensed. Equipped with paper towel feed wheel for use in filling the dispenser, for user to advance paper should it become necessary to feed paper through dispenser. Paper towels are dispensed with pull force of less than 5 pounds (22.2 N) to comply with accessible design guidelines (including ADAAG in U.S.A.).

Surface-Mounted Roll-Paper-Towel Dispenser shall be Model B-72860 of Bobrick Washroom Equipment, Inc., Clifton Park, New York; Jackson, Tennessee; Los Angeles, California; Bobrick Washroom Equipment Company, Scarborough, Ontario; Bobrick Washroom Equipment Pty. Ltd., Australia; and Bobrick Washroom Equipment Limited, United Kingdom.

The illustrations and descriptions herein are applicable to production as of the date of this Technical Data Sheet.
The manufacturer reserves the right to, and does from time to time, make changes and improvements in designs and dimensions.

Revised 8/02/16$^{S/A,\ R/*}$ Printed in U.S.A.
© 2016 by Bobrick Washroom Equipment, Inc.

BOBRICK

Technical Data

ClassicSeries® SURFACE-MOUNTED PAPER TOWEL DISPENSER

B-2620



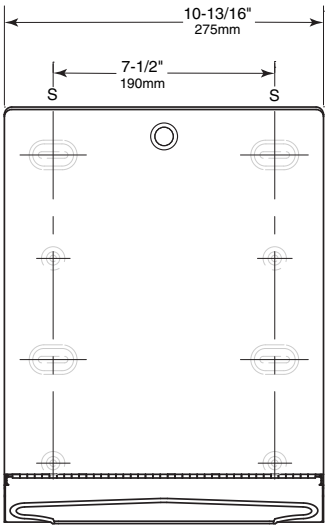

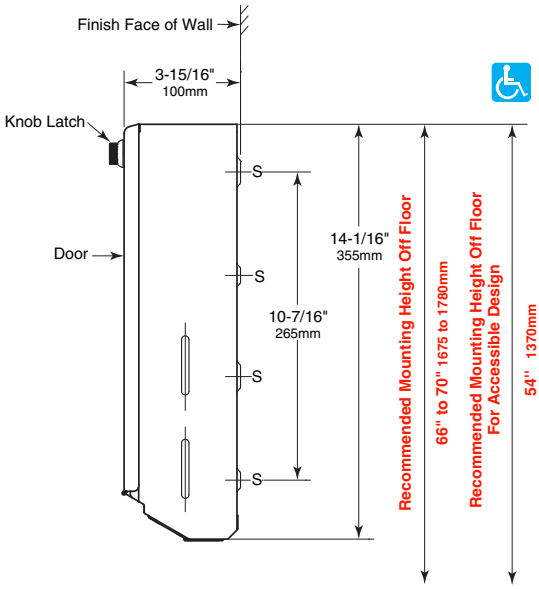

MATERIALS:

Cabinet — 18-8, type-304, 22-gauge (0.8mm) stainless steel with satin finish. All-welded construction. Exposed surfaces have satin finish. Towel tray has hemmed opening to dispense paper towels without tearing.

Door — 18-8, type-304, 22-gauge (0.8mm) stainless steel with satin finish. Secured to cabinet with a full-length stainless steel piano-hinge. Equipped with a knob latch.

Optional: Order Bobrick Part No. 262-130 TowelMate® available as on optional accessory. TowelMate accessory allows for paper towels to dispense one at a time without bulging, sagging or falling through the towel tray opening. TowelMate fits Gamco and most manufacturers' similar models.

OPERATION:

Unit dispenses C-fold and multifold paper towels 3-1/8" to 3-13/16" (79–97mm) deep. Slots in sides of cabinet indicate refill time. Capacity: 400 C-fold or 525 multifold paper towels. To dispense narrower towels 2-1/2" to 3-1/8" (64–79mm) deep, order optional TowelMate accessory Bobrick Part No. 262-130.

INSTALLATION:

Mount unit on wall with four #10 x 1-1/4" (4.8 x 32mm) sheet-metal screws (not furnished) at four of the eight mounting holes indicated by an *S* (top slots and bottom holes preferable). For plaster or dry wall construction, provide concealed backing to comply with local building codes, then secure with sheet-metal screws. For other wall surfaces, provide fiber plugs or expansion shields for use with sheet-metal screws, or provide 1/8" (3mm) toggle bolts or expansion bolts.

SPECIFICATION:

Surface-mounted paper towel dispenser shall be type-304 stainless steel with all-welded construction; exposed surfaces shall have satin finish. Door shall be secured to cabinet with a full-length stainless steel piano-hinge and equipped with a knob latch. Paper towel tray shall have hemmed opening to dispense paper towels without tearing. Unit shall be capable of dispensing 400 C-fold or 525 multifold paper towels measuring 3-1/8" to 3-13/16" (79 to 97mm) deep. Narrower paper towels 2-1/2" to 3-1/8" (65 to 79mm) deep may be efficiently dispensed with the use of an optional TowelMate accessory, Bobrick Part No. 262-130. TowelMate accessory allows for paper towels to dispense one at a time without bulging, sagging or falling through the towel tray opening.

Surface-Mounted Paper Towel Dispenser shall be Model B-2620 of Bobrick Washroom Equipment, Inc., Clifton Park, New York; Jackson, Tennessee; Los Angeles, California; Bobrick Washroom Equipment Company, Scarborough, Ontario; Bobrick Washroom Equipment Pty. Ltd., Australia; and Bobrick Washroom Equipment Limited, United Kingdom.

The illustrations and descriptions herein are applicable to production as of the date of this Technical Data Sheet.
The manufacturer reserves the right to, and does from time to time, make changes and improvements in designs and dimensions.

Rev. 6/30/15 R/A, S/B
Printed in U.S.A.
© 2015 by Bobrick Washroom Equipment, Inc.

BOBRICK

Technical Data

ConturaSeries® SURFACE-MOUNTED SOAP DISPENSER FOR ANTIBACTERIAL SOAPS

(with special container made from type-316 stainless steel)

818615



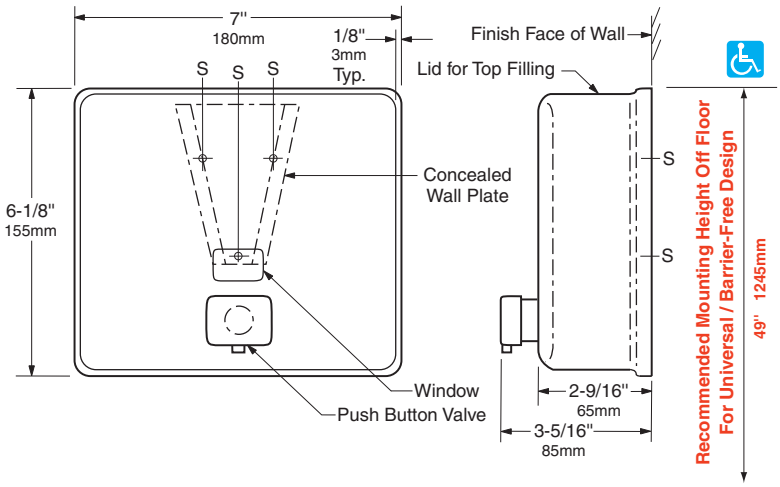

MATERIALS:

Container — Body is 18-8 , type-316, 20-gauge (0.9mm) stainless steel with satin finish. Drawn, one-piece, seamless construction. Front has same degree of arc as other Bobrick ConturaSeries washroom accessories. Radius on corners and edges complement other ConturaSeries accessories. Back plate is 22-gauge (0.8mm) stainless steel with 20-gauge (0.9mm) stainless steel mounting bracket attached. Container body and back plate are epoxy-sealed to prevent warping and leakage. Concealed wall plate is 20-gauge (0.9mm) stainless steel. Equipped with a plastic soap refill-indicator window and a locked, hinged stainless steel lid for top filling. Capacity: 40-fl oz (1.2-L).

Valve — Black molded plastic push button. Soap head-holding mushroom valve. Stainless steel spring. U-packing seal and duckbill. Antibacterial-soap-resistant plastic cylinder.

OPERATION:

Corrosion-resistant valve dispenses commercially marketed all-purpose hand soaps. Valve operates with one hand, without tight grasping, pinching, or twisting of the wrist, and with less than 5 pounds of force (22.2 N) to comply with barrier-free accessibility guidelines (including ADAAG in U.S.A.). Window indicates when refill is required. The locked, hinged lid opens for top filling with special key provided. Concealed, vandal-resistant mounting.

INSTALLATION:

Secure wall plate to the wall with screws furnished at points indicated by an *S*. Slide mounting bracket of container down onto wall plate and secure unit with furnished locking-screw. For plaster or dry wall construction, provide concealed backing to comply with local building codes, then secure unit with screws furnished. For other wall surfaces, provide fiber plugs or expansion shields for use with screws furnished, or provide 1/8" (3mm) toggle bolts or expansion bolts.

Note: Surface-mount the dispenser plumb and true with valve 6" (152mm) to right or left of lavatory center. Provide 4" (102mm) minimum clearance from the lid to the underside of any horizontal projection. Push buttons should be located 44" (1120mm) maximum above the finish floor.

SPECIFICATION:

Surface-mounted soap dispenser shall be type-316 stainless steel with satin finish. Corrosion-resistant valve shall dispense commercially marketed all-purpose hand soaps. Valve shall be operable with one hand and with less than 5 pounds of force (22.2 N) to comply with barrier-free accessibility guidelines (including ADAAG in U.S.A.). Front of soap dispenser shall have same degree of arc and match other Bobrick ConturaSeries accessories in the washroom. Radius on corners and edges of soap dispenser shall complement other Bobrick ConturaSeries washroom accessories. Container body and back plate shall be epoxy-sealed to prevent warping and leakage. Soap dispenser shall have concealed, vandal-resistant mounting. Locked, hinged stainless steel lid for top filling shall require special key to open. Capacity shall be 40-fl oz (1.2-L).

Surface-Mounted Stainless Steel Soap Dispenser For Antibacterial Soaps shall be Model 818615 of Bobrick Washroom Equipment, Inc., Clifton Park, New York; Jackson, Tennessee; Los Angeles, California; Bobrick Washroom Equipment Company, Scarborough, Ontario; Bobrick Washroom Equipment Pty. Ltd., Australia; and Bobrick Washroom Equipment Limited, United Kingdom.

The illustrations and descriptions herein are applicable to production as of the date of this Technical Data Sheet.
The manufacturer reserves the right to, and does from time to time, make changes and improvements in designs and dimensions.

Rev. 3/10/10 Printed in U.S.A.
© 2010 by Bobrick Washroom Equipment, Inc.

3102a

HAND SANITIZER WALL DISPENSER TYPICAL EXAMPLE



Product details

Professional looking hand sanitizer dispenser that distributes the precise amounts of liquid. Offers a hands-free operation and wall-mounted convenience. The hands-free automatic distribution reduces germ transmission by eliminating the need to touch the contraption with your hands, enhancing employee and customer health.

- Wall-mounted dispenser for distributing liquid hand sanitizer
- Chrome and black design draws attention to the dispenser
- Capacity of 40.6 oz.
- Made of durable plastic
- Requires 4 D-cell batteries (not included)
- Large window and skylight for ease of use
- High-capacity output works well in high traffic areas throughout your business
- Compatible with Purell LTX-12 refills

Specifications

Scent	No Scent
Cleanser Form Factor	Automatic Dispensers
Capacity (ml.)	1200
Height in Inches	1.69
Width in Inches	3.94
Depth in Inches	5.79
Pack Qty	1
Series or Collection	LTX-12

6543
Soap Dispenser

- ☑ Tank Type Horizontal **Bradex®**
- ☑ Surface-Mounted
- ☑ ADA Compliant



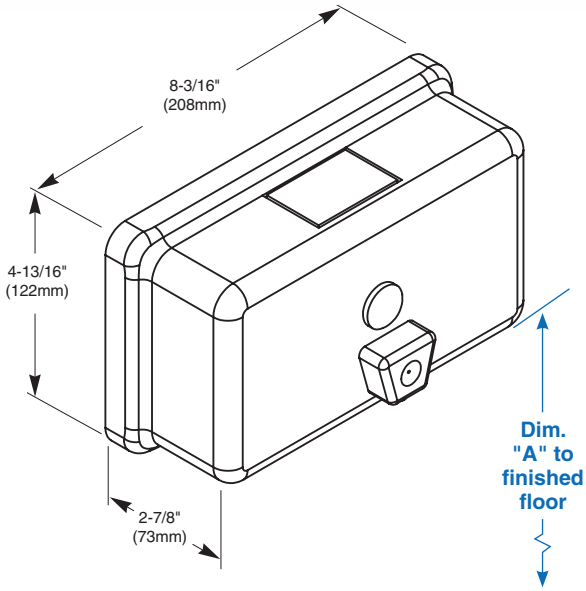

Product Materials

BODY: 20 gauge stainless steel with exposed surfaces in architectural satin finish.
BACK: 20 gauge stainless steel; welded to the body.
WALL PLATE: stainless steel.
SOAP VALVE: Black ABS plastic mechanism.

Capacity

40-oz. liquid soap.

Operation

Push-in valve dispenses measured amount of vegetable or coconut oil liquid soaps, synthetic detergents, and antiseptic solutions with less than 5 lbs. of force. Sight gauge indicates refill time. Locked filler top opens with special key provided.

☑ Bradley liquid soap valves operate best with any vegetable oil or coconut oil hand soap having a 10–15% soap concentration.

Installation

Verify all rough-in dimensions prior to installation. Secure separate mounting bracket to wall. Slide dispenser into place and secure locking screw through filler hole.

Guide Specification

Surface-mounted liquid soap dispenser shall be fabricated of 20 gauge satin finish stainless steel. Dispenser shall have completely concealed mounting, vandal-resistant filler hole cover and sight gauge. Push-in corrosion-resistant liquid soap valve. Capacity: 40-oz. liquid soap. Requires less than 5 lbs. of force to dispense soap.

Overall dimensions: 8-3/16"W x 4-13/16"H x 2-7/8"D.

ADA Compliant

- ☑ Consult local and national accessibility codes for proper installation guidelines.
- ☑ Conformity and compliance to local and national codes is the responsibility of the installer.

Service Kit

Soap Valve - P15-449

Dim. "A" Key Surface:	For Dim. "A"	Top of Unit	Bottom of Unit
Push button top to finished floor	40" (1016mm)	43¼" (1099mm)	38⅜" (975mm)
	38" (965mm)	41¼" (1048mm)	36⅜" (924mm)
	36" (914mm)	39¼" (997mm)	34⅜" (873mm)
	34" (864mm)	37¼" (946mm)	32⅜" (822mm)
Rough wall opening:			
Surface-Mount:	No rough opening, see overall dimensions		

© 2018 Bradley
P.O. Box 309, Menomonee Falls, WI 53052-0309
800 BRADLEY (800 272 3539) +1 262 251 6000
bradleycorp.com

Product Specs Sheets

SOURCE:
https://www.faucet.com/ws-bath-collections-otel-53268-9-7-wall-mounted-double-soap-dispenser-from-the-otel-collection/f1620516

DOSATORE A PARETE DOPPIO 800 ML - ABS CROMATO
DOUBLE WALL BEARING LIQUID SOAP DISPENSER 800 ML - CHROMED ABS



WEIGHT kg 0,59
VOLUME m^3 0,0029

MAINTENANCE

Pulire con panno morbido inumidito. Non usare ammoniaca, detersivi, abrasivi contenenti candeggina

Clean with warm soapy water. Never use ammonia, abrasives, bleach or solvent based cleaners.

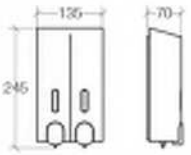

Collection	Model	Dimensions Metric	
Otel	**Otel 53268**	*1 inch = 2.54 cm* *1 inch = 25.4 mm*	WS BATH COLLECTIONS 1051 Lea Drive - Collegeville, PA 19426 Tel. 215 513 9400 - Fax 610 831 0215 www.wsbathcollections.com - info@wsbathcollections.com

BOBRICK

Technical Data

AUTOMATIC WALL-MOUNTED SOAP DISPENSER

B-2012



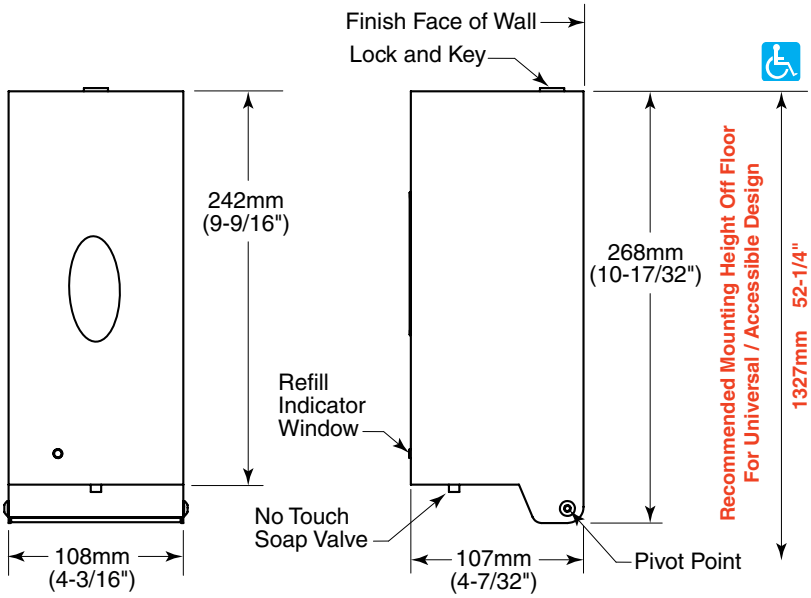

MATERIALS:

Housing — Welded 18-8, Type-304, 18-gauge (1.0 mm) stainless steel with satin-finish. Plastic back plate incorporates mounting screw holes and mounting tape. Equipped with concealed mounting, clear acrylic refill-indicator window and key lock. Refillable, plastic container. Capacity: 850 ml (30-fl oz).

Valve — No-touch, sensor-activated valve suitable for liquid soap, alcohol gel, liquid alcohol, hand sanitizers and iodine.

OPERATION:

To fill the dispenser, remove the lid and fill with liquid hand soap. Dispenses liquid hand soaps of viscosities ranging from 2,000-5,000 cps. After filling soap container, DO NOT TIGHTEN lid. Air flow is necessary inside the container for dispensing. To activate the dispenser, place hand under spout for approximately one second. Sensing range comes at factory setting of 60mm (2-1/2"). The sensing range set by the factory is recommended for optimal performance. Window indicates when refill is required. The locked, hinged housing opens for re-filling only with special key provided. Requires three (3) Alkaline "C" Cell Batteries, 1.5V (not included). Blue indicator light signals "IN USE". Flashing blue light signals "LOW BATTERY." CE Certified.

INSTALLATION:

Install dispenser at least 200 mm (8") from any projection or horizontal surface which may interfere with the operation of the automatic sensor. Mount the dispenser to the wall by using the enclosed screws and wall plugs. The prepared mounting tape may also be used. Make sure the wall surface is cleaned and in good condition to ensure proper mating of the dispenser to the wall. Install three (3) Alkaline "C" Cell Batteries, 1.5V and replace battery cover. After filling soap container, DO NOT TIGHTEN lid. Air flow is necessary inside the container for dispensing. Remove and discard plastic cap from nozzle tip. Plastic dispensing tube may require massaging to prime the unit. Housing must be closed for dispenser to function.

SPECIFICATION:

Automatic wall-mounted soap dispenser shall be Type-304 stainless steel with satin-finish. Corrosion-resistant valve shall dispense a variety of liquid soaps, disinfectants, non-iodine based soaps and do not use alcohol based sanitisers. Valve shall be sensor-activated and not require contact with the dispenser to function. Lockable housing shall be equipped with a clear acrylic refill-indicator window and be hinged for refilling and maintenance. Container shall have a capacity of 850 ml (30-fl oz). Unit shall have CE Certification.

Surface-Mounted Sensor-Operated Soap Dispenser shall be Model B-2012 of Bobrick Washroom Equipment, Inc., Clifton Park, New York; Jackson, Tennessee; Los Angeles, California; Bobrick Washroom Equipment Company, Scarborough, Ontario; Bobrick Washroom Equipment Pty. Ltd., Australia; and Bobrick Washroom Equipment Limited, United Kingdom.

The illustrations and descriptions herein are applicable to production as of the date of this Technical Data Sheet.
The manufacturer reserves the right to, and does from time to time, make changes and improvements in designs and dimensions.

Form No. 2012-200 Revised 1/22/18
© 2018 by Bobrick Washroom Equipment, Inc.

Bradley

Accessories

Satin Stainless Accessories

- ☑ Satin Finish Stainless Steel
- ☑ Surface-Mounted
- ☑ Vandal-Resistant Escutcheons

Product Materials

UNITS: No. 4 satin finish stainless steel.

ESCUTCHEONS: 2"W x 2"H, where applicable, unless otherwise indicated.

Installation

Verify all rough-in dimensions prior to installation. Secure mounting bracket to wall with screws (included) at holes provided. With escutcheon set screw on the bottom, align top end of escutcheon plate interior to top of wall bracket. Pivot escutcheon plate(s) down in position and tighten concealed set screw to lock unit in place.

Guide Specification

Surface-mounted accessory shall be fabricated of heavy gauge No. 4 satin finish stainless steel.



☐ **9014 *Bradex*®**
Soap Dish with Drain Holes

☐ **9014-63**
Soap Dish without Drain Holes, 4¼"W x 4"D

☐ **9014-US**
Domestic



☐ **9104**
8" Deep Towel Shelf
☐ 18"W ☐ 24"W



☐ **9054**
¾" Square Towel Bar
☐ 18"W *Bradex*®
☐ 24"W *Bradex*®
☐ 30"W

☐ **9054-1200US**
12"W Domestic

☐ **9054-1800US**
18"W Domestic

☐ **9054-2400US**
24"W Domestic

☐ **9054-3000US**
30"W Domestic



☐ **9065**
¾" Round Towel Bar, projects 3"
☐ 18"W *Bradex*®
☐ 24"W *Bradex*®
☐ 30"W

☐ **9065-1800US**
18"W Domestic

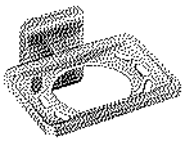

☐ **9044 *Bradex*®**
Tumbler and Toothbrush Holder
4¼"W x 4"D

☐ **9044-US**
Domestic



☐ **9104-90**
8" Deep Towel Shelf with Towel Bar
☐ 18"W ☐ 24"W

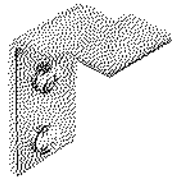

☐ **9111**
Clothes Hook, 1"W x 2¼"H x 1½"D

Washroom Accessories
Document No. 8905

Orders composed of products indicated as ***Bradex***® will be available to ship in three days after receipt of order at the factory. There is no pricing penalty for this service from Bradley.

Always consult local and national codes for proper installation guidelines. Conformity and compliance to local and national codes is the responsibility of the installer.

© 2013 Bradley
P.O. Box 309, Menomonee Falls, WI 53052-0309

This information is subject to change without notice. 2/11/2013

Distributed by
www.AmeraProducts.com
Phone: (800) 608-6568
Fax: (409) 840-5545
info@ameraproducts.com

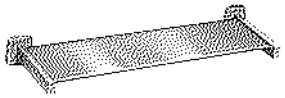

□ 9094
5" Deep Shelf, projects 6¼"
☐ 18"W ☐ 24"W ☐ 30"W

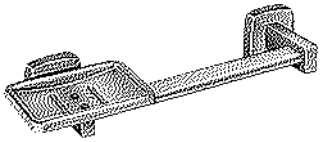

□ 9034
Horizontal Towel Bar with Soap Dish,10¼"W x 3⅛"D



□ 9114 *Bradex*®
Single Robe Hook, projects 2"

□ 9114-US
Domestic



□ 9124 *Bradex*®
Double Robe Hook, projects 2¼"

□ 9124-US
Domestic



□ 9134 *Bradex*®
Hat and Coat Hook, projects 2⅝"

□ 9134-US
Domestic



□ 9314 *Bradex*®
Towel Hook, projects 4⁷⁄₁₆"

□ 9314-US
Domestic



□ 9144
DOOR STOP. PROJECTS 2½"



□ 9164
BOTTLE OPENER



□ 9334
Towel Ring, projects 2⅜"

□ 9334-US
Domestic

Washroom Accessories
Document No. 8905

Orders composed of products indicated as ***Bradex®*** will be available to ship in three days after receipt of order at the factory. There is no pricing penalty for this service from Bradley.

Always consult local and national codes for proper installation guidelines. Conformity and compliance to local and national codes is the responsibility of the installer.

© 2013 Bradley
P.O. Box 309, Menomonee Falls, WI 53052-0309

This information is subject to change without notice. 2/11/2013

Distributed by
www.AmeraProducts.com
Phone: (800) 608-6568
Fax: (409) 840-5545
info@ameraproducts.com

3124

Wire Garment Rack



Enlarge

Maximize space with this closet on wheels in your store or office.

- Two 48" shelves hold boxes, hats, shoes and much more.
- Hang bar holds up to 60 jackets.
- 5" locking poly swivel casters.

MODEL NO.	DESCRIPTION	HEIGHT	LENGTH	CAPACITY	WT. (LBS.)	PRICE EACH		ADD TO CART
						1	5+	
H-7896	Wire Garment Rack	69"	48"	150 lbs.	50	$190	$180	1 ADD

DIMENSIONS:

- Height in chart includes casters.
- Posts (Single Piece Construction): 1" Diameter
- Shelf Thickness: 1 1/4"

MATERIAL:

- Chrome-Plated carbon steel.
- Rust resistant, not rust proof.

TEMPERATURE:

- -20 to 120 F

CAPACITY:

- Overall: 1,000 lbs
- Hang Bar: 75 lbs
- Each Shelf: 800 lbs evenly distributed

CASTERS: (Sold Separately)

- Dimensions: 5 x 1 1/4"
- Add 5 3/4" to the height of the unit.
- Capacity: 1,000 lbs per kit (250 lbs per caster)
- NSF Certified (National Sanitary Foundation)

SOURCE: https://www.uline.com/Product/Detail/H-7896/Clothing-Racks-and-Accessories/Wire-Garment-Rack

3125

8 COAT HOOK RACK



Product Overview

- Description

  Bring order to the entryway with this wall-mounted coat rack! Crafted of manufactured wood in a sleek gray finish, this coat rack features a clean-lined rectangular backplate complete with decorative screw caps. Made from die-cast zinc in a complementary black finish, eight double-hooks accommodate all your jackets, hats, backpacks, handbags and more with ease. Measuring 4.37" H x 45" W x 2.98" D overall, this rack arrives ready to hang right out of the box with wall-mounting hardware included.

Features

- Use this casual hook rack to add stylish organization to your foyer, bedrooms, bathrooms, hallways, and more
- Add a touch of sophistication with this warm gray rack with classic flat black hooks
- This durable medium density fiberboard (MDF) rack with die-cast zinc hooks

Product Details

- Material: Manufactured Wood
- Number of Hooks: 8

SOURCE: https://www.walmart.com/ip/August-Grove-Esson-Industrial-Craftsman-Wall-Mounted-Coat-Rack/809349883

3131
OPCI

AMERICAN SPECIALTIES, INC.
441 Saw Mill River Road, Yonkers, NY 10701 (914) 476-9000
www.americanspecialties.com

MODEL No:	7311-20 7311-24
ISSUED:	8-03
REVISED:	1-06

SURFACE MOUNTED TOWEL SHELF WITH DRYING ROD

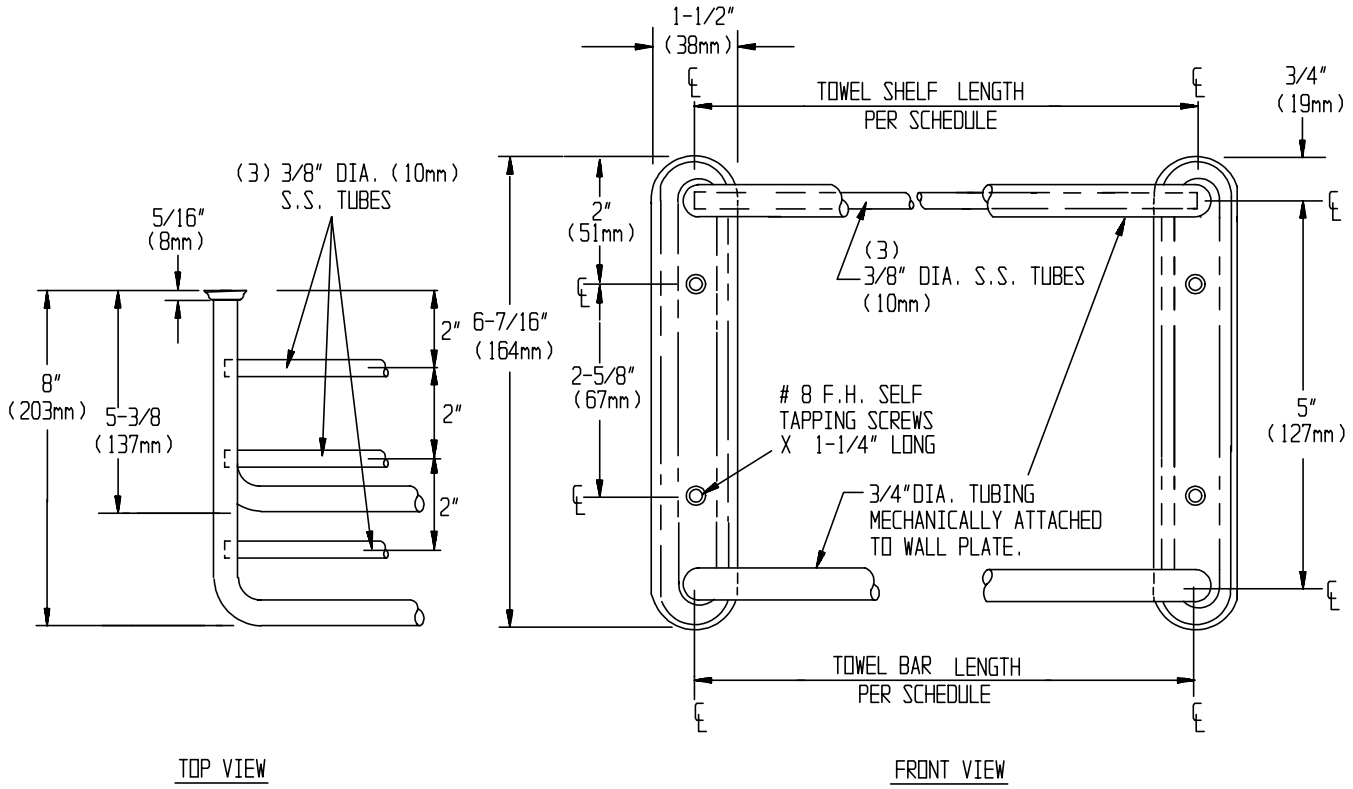

SPECIFICATION

Surface Mounted Towel Shelf with Drying Rod shall be fabricated of stainless steel alloy 18-8, type 304. Wall mounting plates shall be formed for strength with dimpled mounting holes. Cross tubes shall be 3/8" diameter (Ø10mm) and shall be held in receiver holes in continuous 3/4" diameter (Ø19mm) formed mounting frame mechanically retained in wall plates. Drying rod below shelf shall be 3/4" diameter (Ø19mm) formed tube mechanically retained in wall plates. Surface finish of entire unit shall be bright. Length shall be as chosen from schedule and indicated by code suffix.

Surface Mounted Towel Shelf with Drying Rod shall be Model № 7311-20 or № 7311-24 of American Specialties, Inc., 441 Saw Mill River Road, Yonkers, New York 10701-4913

INSTALLATION

Surface mount unit on wall using № 8 flat or oval head self tapping screws (by others) through countersunk holes provided in mounting plate into suitable prepared mountings (by others) or other suitable mounting hardware (by others) to suit wall conditions. For compliance with ICC/ANSI A-117.1-2003 and ADA Accessibility Guidelines install unit with top of shelf 48" (1219mm) maximum above finished floor (MAX AFF) if clear floor forward reach or if clear floor side reach access only is provided or 46" (1168mm) MAX AFF if side reach access over an obstruction (e.g. vanity) with reach depth greater than 10" (254mm) and less than 25" (635mm) is only provided or 44" (1118mm) MAX AFF if forward reach over an obstruction (e.g. commode) with reach depth greater than 20" (508mm) and less than 25" (635mm) is only provided. For general utility install 68" (1727mm) MAX AFF.

LENGTH	MODEL №
20″ (508mm)	**7311-20**
24″ (610mm)	**7311-24**

THIS MANUFACTURER RESERVES THE RIGHT TO MAKE CHANGES IN DESIGN OR DIMENSIONS WITHOUT FORMAL NOTICE

AMERICAN SPECIALTIES, INC.
441 Saw Mill River Road, Yonkers, NY 10701 (914) 476-9000

MODEL No:	0690
ISSUED:	1-87
REVISED:	9-04

SURFACE MOUNTED SHELF

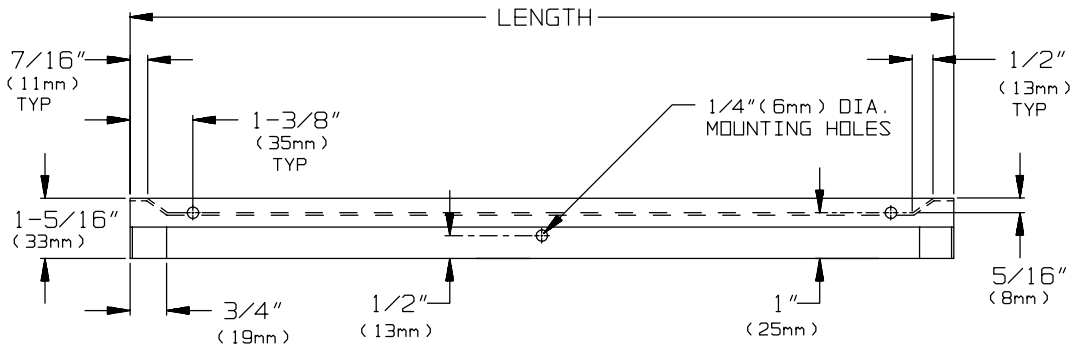

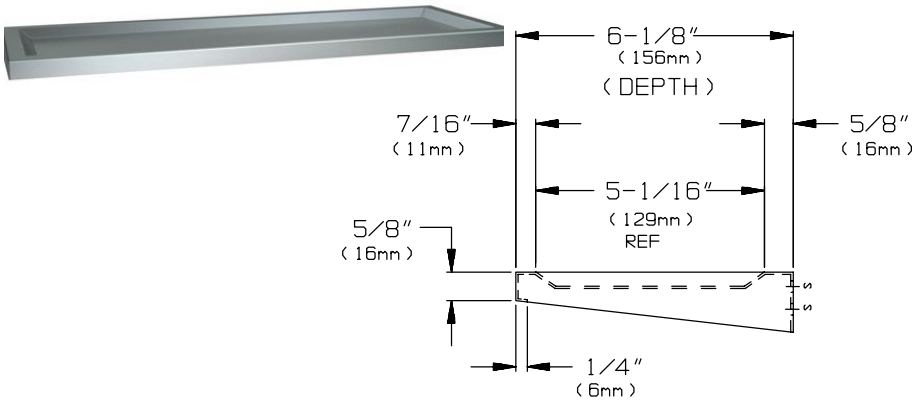

SPECIFICATION

Surface Mounted Shelf shall be fabricated of alloy 18-8 stainless steel, type 304 and shall be 18 gauge. Shelf shall have a 5/8″ (16mm) lip on front with an extra return for rigidity and safety. Sides of shelf shall be closed and tapered from front to rear. Rear of shelf shall have a turned down leg with mounting holes. Shelf shall have a 3/8″ (10mm) depression in top surface inside perimeter rim. All edges shall be de-burred. All exposed surfaces shall be № 4 satin finish and shall be protected during shipment with a PVC film easily removable after installation.

Surface Mounted Shelf shall be Model № 0690-xxxx as manufactured by American Specialties, Inc., 441 Saw Mill River Road, Yonkers, New York 10701-4913

Model No.	LENGTH	DEPTH	QUANTIY REQUIRED
0690-0618	18″ (457mm)	6″ (152mm)	
0690-0624	24″ (610mm)	6″ (152mm)	

INSTALLATION

Unit is surface mounted on wall or partition using № 10 self tapping screws (by others) through (3) holes provided in shelf back return. For compliance with ADA Accessibility Guidelines, unit should be installed so that shelf top is between 48" (1219mm) maximum above finished floor (AFF) and 32" (813mm) minimum AFF; for most common utility, typical is 42" (1067mm) AFF or 18" (457mm) above wash basin.

OPERATION

Shelf is stable and stationary after proper and secure mounting to adequate wall reinforcement or stud structure. Shelf is suitable for toiletry material storage.

THIS MANUFACTURER RESERVES THE RIGHT TO MAKE CHANGES IN DESIGN OR DIMENSIONS WITHOUT FORMAL NOTICE

3156



STANDARD DESIGN FEATURES

Width: .....25 in./64 cm.
Length: .....32 in./81 cm.
Height: .....36 in./91 cm.

- All stainless steel construction
- All inside corners are rounded for ease in cleaning
- Thermostatically controlled mixing valve for proper water temperature
- High side panels to control splash
- Available water operation:
  1. Knee or thigh-operated push panels
  2. Foot pedal
  3. Infrared/hands free controls
- Available soap operation:
  1. Hand pump
  2. Infrared/hands-free controls

Optional Accessories

- Battery-operated timer
- Bottom skirt to conceal plumbing lines or when foot-operated water controls are used

All measurements in inches/centimeters +-

SS101

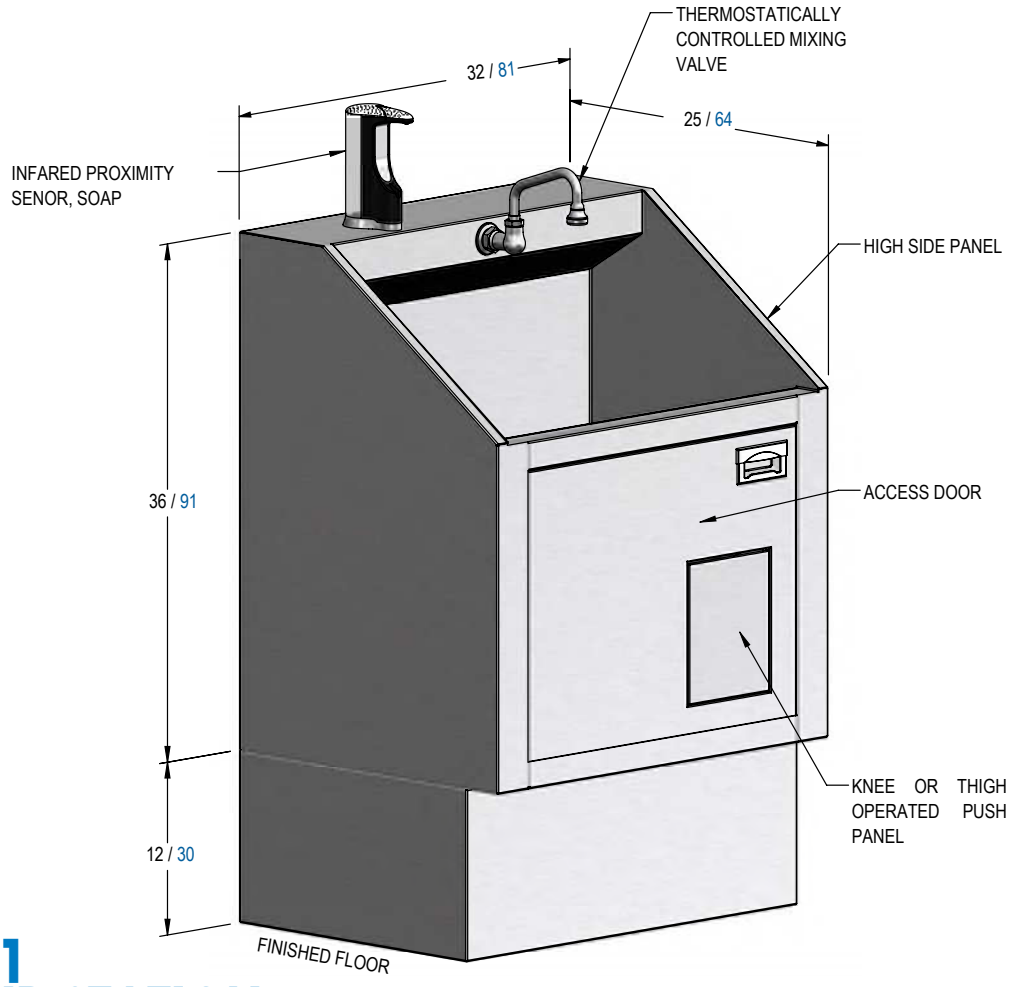

MODEL SS101
SINGLE SCRUB STATION

411 North Aerojet Avenue
Azusa, CA 91702
www.mortechmfg.com

T(800) 410-0100
T(626) 334-1471
F(626) 334-1704

FRIGIDAIRE

Microwaves

FFCE1638TD / FFCE1638LS

Countertop



Product Dimensions

Height	12-7/8"
Width	21-3/4"
Depth	18-1/2"

Signature Features

Sensor One-Touch Options
Microwave automatically adjusts power levels and cooking times to cook a variety of items, effortlessly.

Keep Warm Setting
Keep food warm until everything — and everyone — is ready.

Melt & Soften
Use the microwave to quickly melt or soften butter or cheeses for your recipes.

Easy-Set™ Start
Quickly start cooking – one to six minutes – with just one touch.

More Easy-To-Use Features

Ready-Select® Controls
Easily select options with the touch of a button.

Auto One-Touch Options
Our microwaves feature easy-to-use one-touch buttons so you can cook beverages, baked potatoes, popcorn, fresh veggies or even add thirty seconds with the touch of a button.

Effortless™ Defrost
Makes it easy to defrost almost anything, quickly and evenly.

Effortless™ Reheat
Reheat almost anything at the touch of a button.

Multiple-Stage Cooking Option
Our Multi-Stage Cooking option allows you to program power levels and cooking times in advance, so you can program it to defrost, cook and keep a meal warm all at once.

10 Cooking Power Levels
Provides the versatility needed to prepare everything from frozen pizza to pot roast quickly and easily.

Control Lock Option

Electronic Clock / Timer
Helps you keep track of cook times.

Attractive Stainless Steel Exterior

Interior Light
Illuminates the contents of the microwave for increased visibility.

Large Glass Turntable
Even large items fit on our large glass turntable.

Available in:


Black Stainless (D)


Stainless (S)

FRIGIDAIRE

Microwaves

FFCE1638TD / FFCE1638LS **Countertop**

Features	
Control / Timing System	Ready-Select®
Exterior Door Finish	Blck Stainless Steel (D), Stainless Steel (S)
Handle Design	Push Button
Microwave Features	
Microwave Capacity (Cu. Ft.)	1.6
Watts (IEC-705 Test Procedure)	1,100
Interior Light	Yes
Interior Color	White
Turntable Diameter	14-1/4"
Turntable On / Off	
Control Lock	Yes
Clock	Yes
Touch Pad Buttons	23
Power Levels	10
Accessory Metal Rack	
Microwave Control Options	
Easy-Set™ Start	Yes
Popcorn Button	Yes
Chicken Nugget Button	
Baked Potato Button	Yes
Sensor Reheat Button	Yes
Snack Button	
Beverage	Yes
Melt & Soften Options	4 / 4
Auto Reheat Options	
Snack Menu Options	
Auto Cook Options	
Auto Defrost Options	Yes
Keep Warm	Yes
Add-30-Seconds	Yes
Sensor Cooking Options	7
Vegetable Cook Sensor	Yes
Delay Start	
User Preferences	
Power Ratings	
Frequency (Mhz)	2,450
Watts @ 120 Volts	1,100
Amps @ 120 Volts	13
Specifications	
Oven Interior Height	10-5/16"
Oven Interior Width	17-1/4"
Oven Interior Depth	15-3/8"
Power Supply Connection Location	Rear
Voltage Rating	120V / 60Hz / 15A
Minimum Circuit Required (Amps)	15
Shipping Weight (Approx.)	47 Lbs.

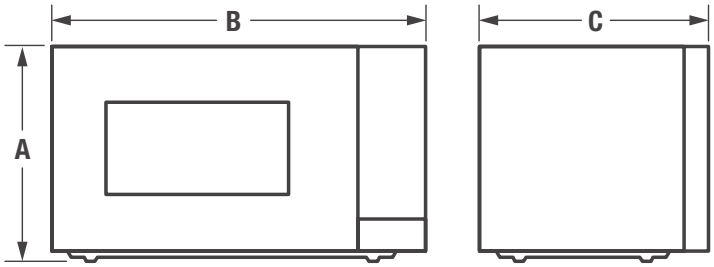

NOTE: For planning purposes only. Always consult local and national electric codes. Refer to Product Installation Guide for detailed installation instructions on the web at frigidaire.com.

Product Dimensions[1]	
A - Height	12-7/8"
B - Width	21-3/4"
C - Depth	18-1/2"

[1]*A minimum clearance of 3 inches is required above microwave oven and between microwave oven and adjacent walls.*

Accessories information available on the web at ***frigidaire.com***

© 2017 Electrolux Home Products, Inc.

Specifications subject to change.

3202

PARTS BIN-MOBILE



PLASTIC STACKABLE BINS

MODEL NO.	OUTSIDE DIM. L x W x H	INSIDE DIM. L x W x H	QTY./ CTN.	LBS./ CTN.	PRICE PER BIN		
					1 CTN.	3 CTNS.	6+ CTNS.
S-12413	5 1/2 x 4 x 3"	4 7/8 x 3 9/16 x 2 5/8"	24	5	$1.15	$1.10	$1.05
S-12414	7 1/2 x 4 x 3"	6 13/16 x 3 1/2 x 2 5/8"	24	5	1.55	1.50	1.45
S-20581	9 1/2 x 6 x 5"	8 1/2 x 5 1/8 x 4 1/2"	12	7	4.20	4.05	3.90
S-13536	11 x 4 x 4"	10 3/8 x 3 7/16 x 3 1/2"	12	7	2.90	2.80	2.70
S-12415	11 x 5 1/2 x 5"	10 1/4 x 4 5/8 x 4 1/2"	12	7	$3.69 any quantity		
S-12416	11 x 8 x 7"	10 1/4 x 6 7/8 x 6 3/8"	6	7	7.90	7.55	7.25
S-12417	11 x 11 x 5"	10 1/4 x 10 x 4 1/2"	6	6	7.35	7.00	6.65
S-13537	11 x 16 1/2 x 5"	10 5/16 x 15 1/8 x 4 3/8"	6	10	11.00	10.45	9.90
S-12418	15 x 5 1/2 x 5"	14 1/8 x 4 1/2 x 4 1/2"	12	10	6.55	6.30	6.05
S-12419	15 x 8 x 7"	13 3/4 x 6 7/8 x 6 3/8"	12	16	7.35	7.00	6.65
S-12420	15 x 16 1/2 x 7"	13 13/16 x 14 15/16 x 6 5/16"	6	15	11.00	10.45	9.90
S-14454	18 x 8 x 9"	17 1/8 x 6 3/4 x 8 1/4"	6	14	17.10	16.25	15.45
S-12421	18 x 11 x 10"	16 7/8 x 9 1/4 x 9 3/8"	4	10	17.55	16.75	15.90
S-12422	18 x 16 1/2 x 11"	16 7/8 x 15 x 10 3/8"	3	13	22.65	21.65	20.60

SOURCE: https://www.uline.com/Product/Detail/H-3888/Bin-Organizers/Panel-Mobile-Bin-Organizer-36-x-71

SOURCE FOR BINS, DIVIDERS & LIDS: https://www.uline.com/BL_305/Uline-Plastic-Stackable-Bins

KEURIG® K-CUP® Single Cup Brewing System

COMMERCIAL SERIES

K150

This feature-rich brewer is perfect for small to medium-sized environments

- Color Touchscreen Interface for easy operation
- Large 90 oz. Water Reservoir or direct line plumbed for continuous use
- Five programmable brew sizes to meet the needs of multiple users



Brew Sizes	4 oz., 6 oz., 8 oz., 10 oz., 12 oz.
Water Source	Pour Over or Plumbed *(with Direct Plumb Kit Accessory)*
Cold Water Tank	90 oz.
Drainable Internal Water Tank	Yes
Interface	LCD Full Color Touchscreen
– Multiple Languages	English/French/Spanish
– Programmable Clock	Yes
– Program "On/Off"	Yes
– Program "Auto Off"	Yes
– Customize Brew Temperature	Yes
– Customize Brew Size Options	Yes
– Program Contact Screen Info	Yes
Brewer Weight (Empty)	18 lbs
UL Listed	cULus Commercial & Household
NSF Certification	NSF/ANSI 4 Food Equipment
Electrical	120 VAC, 60 Hz, Single Phase, 15A
Power	1400W
Plug Type	2-Wire Plus Ground
Product Number	20150
UPC Number	649645201504

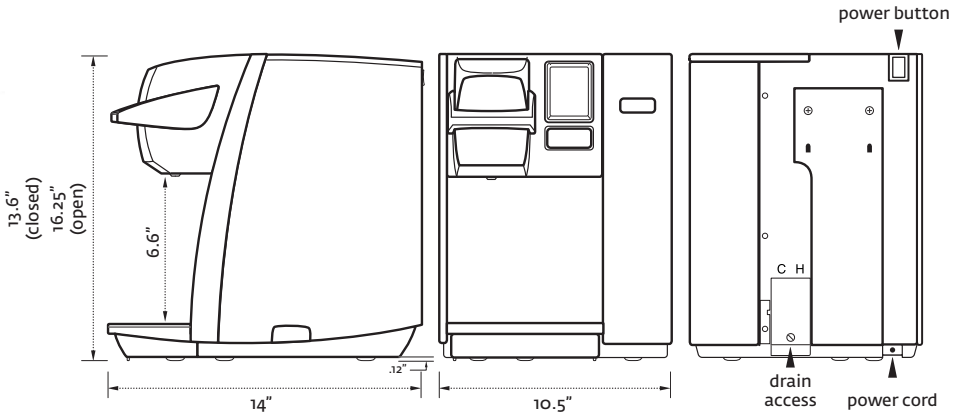

NSF

KEURIG COMMERCIAL GRADE Engineered for Continuous Use

Reorder #97047MS Rev A
© 2013 Keurig, Incorporated.
www.keurig.com

AXIOM-15-3 (3 Lower Warmers)

16.8" x 22.1" x 16.3"
(42.7cm x 56.1cm x 41.4cm)



- Adjusts automatically to varying water pressure
- Automatic warmer shut-off
- For high lime areas, BrewLOGIC® technology calculates flow rate and adjusts brew time to maintain consistent pot levels
- Electronic diagnostics and built-in tank drain make service easier
- Large 200oz. (5.9L) tank provides back-to-back brewing capacity
- Ensure coffee quality with programming for brew level, cold brew lock- out and tank temperature, set easily from the front of the machine
- Coffee extraction controlled with programmable pre-infusion, pulse brew and digital temperature precision
- Energy-saver mode reduces tank temperature during idle periods
- Hot water faucet
- SplashGard® funnel deflects hot liquids away from the hand

Agency:

Specifications

Product #: 38700.0002
Water Access: Plumbed
Finish: Stainless
Funnel: Black Plastic
Faucet: Upper
Warmers: Three Lower

Additional Features

DBC

Electrical & Capacity

Volts	Amps	Watts	Cord Attached	Plug Type	8oz cups/hr 236ml cups/hr	Input H²O Temp.	Phase	# Wires plus Ground	Hertz
120	15	1800	Yes	NEMA 5-15P	67	60°F (15.5°C)	1	2	60

Plumbing Requirements

PSI	kPa	Fitting Supplied	Water Flow Required (GPM)
20-90	138-621	1/4" Male Flare Fitting	-

CAD Drawings

2D	Revit	KLC
●		

BUNN® reserves the right to change specifications and product design without notice. Such revisions do not entitle the buyer to corresponding changes, improvements, additions or replacements for previously purchased equipment. For most current specifications and other info visit bunn.com.

Created on: 02/06/2019

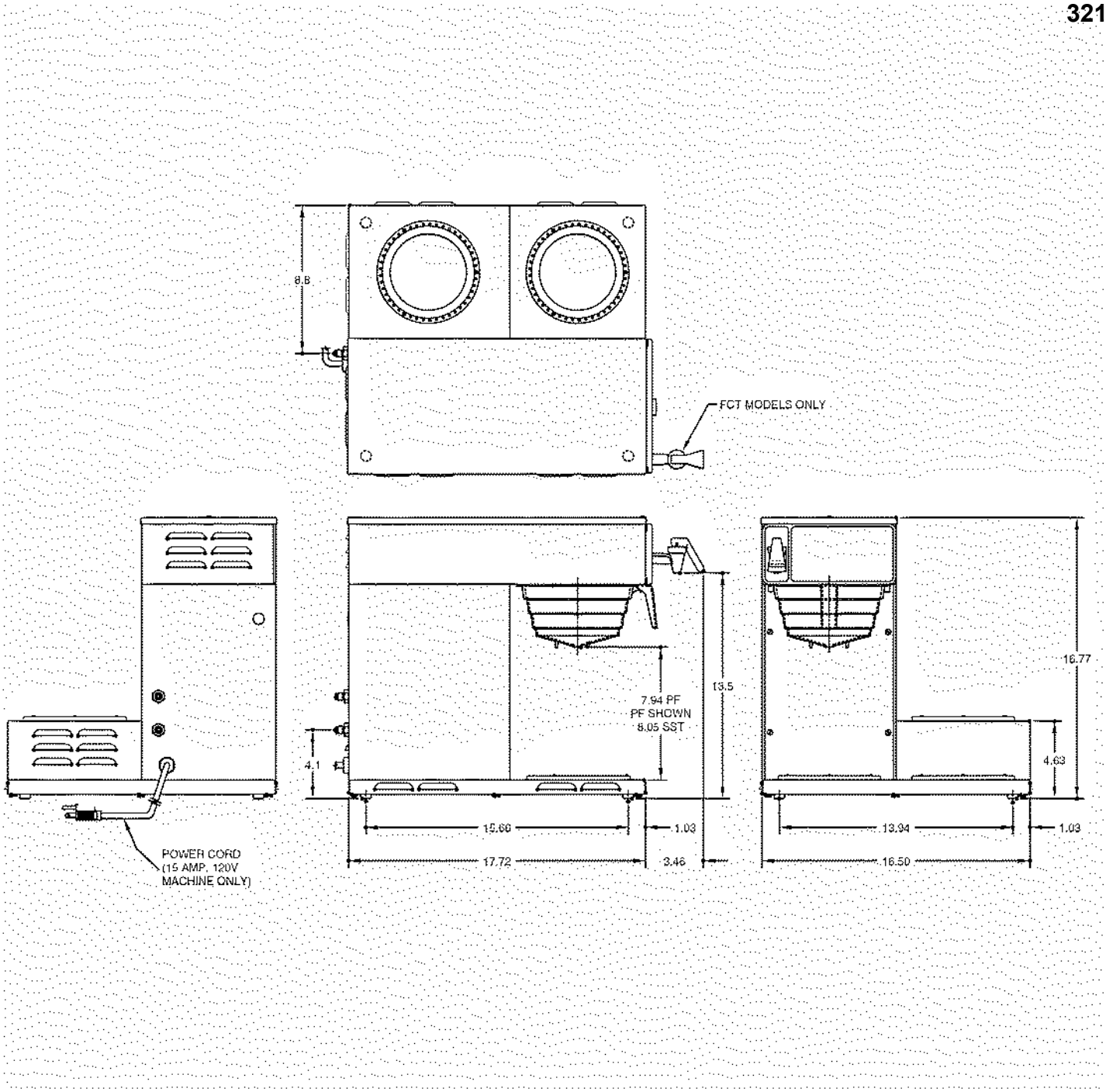

	Unit			Shipping				
	Width	**Height**	**Depth**	**Width**	**Height**	**Depth**	**Weight**	**Volume**
English	16.3 in.	16.8 in.	22.1 in.	19.9 in.	22.4 in.	25.8 in.	36.750 lbs	5.939 ft³
Metric	41.4 cm	42.7 cm	56.1 cm	50.5 cm	56.9 cm	65.5 cm	16.670 kgs	0.168 m³

BUNN® reserves the right to change specifications and product design without notice. Such revisions do not entitle the buyer to corresponding changes, improvements, additions or replacements for previously purchased equipment. For most current specifications and other info visit bunn.com.

Created on: 02/06/2019

Related Products & Accessories: AXIOM-15-3 (3 Lower Warmers)(38700.0002)



FILTERS,REGULAR1M 500/2 50/CL

Product #: 20115.0000



FUNNEL W/DECALS, BLACK PLASTIC

Product #: 20583.0003



WATER FILTER SYSTEM,EQ-17-TL

Product #: 30200.1000



WATER FILTER,IN LINE ED-17-TL

Product #: 30201.1001

BUNN® reserves the right to change specifications and product design without notice. Such revisions do not entitle the buyer to corresponding changes, improvements, additions or replacements for previously purchased equipment. For most current specifications and other info visit bunn.com.

Serving & Holding Options: AXIOM-15-3 (3 Lower Warmers)(38700.0002)



EASY POUR®,(BLK) 1/CS

Product #:06100.0101



EASY POUR®,(BLK) 2/CS

Product #:06100.0102



EASY POUR®,(BLK) 3/CS

Product #:06100.0103



EASY POUR®,(BLK) 6/CS

Product #:06100.0106



EASY POUR®,(BLK) 12/CS

Product #:06100.0112



EASY POUR®,(BLK) 24/CS

Product #:06100.0124



EASY POUR,(BLK) 6-1/CS

Product #:06100.0156



EASY POUR®,(ORN) 1/CS

Product #:06101.0101



EASY POUR®,(ORN) 2/CS

Product #:06101.0102



EASY POUR®,(ORN) 3/CS

Product #:06101.0103



EASY POUR®,(ORN) 6/CS

Product #:06101.0106



EASY POUR,(ORN) 12/CS

Product #:06101.0112



EASY POUR®,(ORN) 24/CS

Product #:06101.0124



DECANTER,GLASS-BLK 12C 24/CS

Product #:42400.0024



DECANTER,GLASS-BLK 12CUP 1PK

Product #:42400.0101



DECANTER,GLASS-BLK 12C 3/CS

Product #:42400.0103



DECANTER,GLASS-ORN 12C 24/CS

Product #:42401.0024



DECANTER, GLASS-ORN 12 CUP 1PK

Product #:42401.0101



DECANTER,GLASS-ORN 12C 3/CS

Product #:42401.0103

BUNN® reserves the right to change specifications and product design without notice. Such revisions do not entitle the buyer to corresponding changes, improvements, additions or replacements for previously purchased equipment. For most current specifications and other info visit bunn.com.

Created on: 02/06/2019

VLPF (2 Lower Warmers)

17.4" x 13.1" x 23.5"
(44.2cm x 33.3cm x 59.7cm)

- Black finish
- Internal components are constructed from stainless steel
- SplashGard® funnel deflects hot liquids away from the hand
- Two individually controlled warmers



Agency:

Specifications

Product #: 07400.0005
Water Access: Plumbed
Finish: Stainless
Funnel: Black Plastic
Faucet: Upper
Warmers: Two Lower

Additional Features

Low Profile

Electrical & Capacity

Volts	Amps	Watts	Cord Attached	Plug Type	8oz cups/hr 236ml cups/hr	Input H²O Temp.	Phase	# Wires plus Ground	Hertz
120	13.3	1600	Yes	NEMA 5-15P	61	60°F (15.5°C)	1	2	60

Plumbing Requirements

PSI	kPa	Fitting Supplied	Water Flow Required (GPM)
20-90	138-621	1/4" Male Flare Fitting	-

CAD Drawings

2D	Revit	KLC
●		

BUNN® reserves the right to change specifications and product design without notice. Such revisions do not entitle the buyer to corresponding changes, improvements, additions or replacements for previously purchased equipment. For most current specifications and other info visit bunn.com.

Created on: 02/06/2019

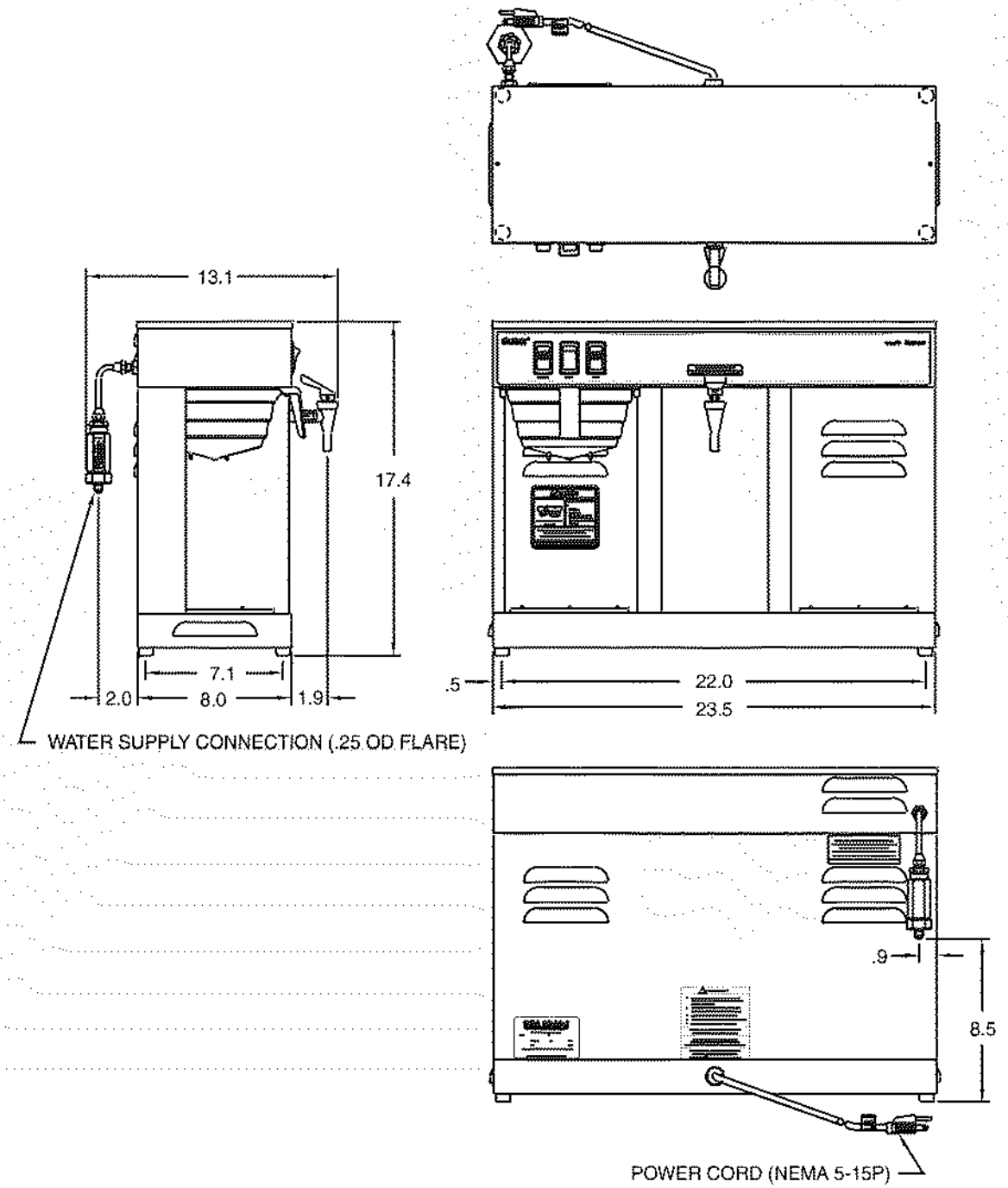

	Unit			Shipping				
	Width	**Height**	**Depth**	**Width**	**Height**	**Depth**	**Weight**	**Volume**
English	23.5 in.	17.4 in.	13.1 in.	22.0 in.	25.5 in.	14.5 in.	27.950 lbs	4.707 ft³
Metric	59.7 cm	44.2 cm	33.3 cm	55.9 cm	64.8 cm	36.8 cm	12.678 kgs	0.133 m³

BUNN® reserves the right to change specifications and product design without notice. Such revisions do not entitle the buyer to corresponding changes, improvements, additions or replacements for previously purchased equipment. For most current specifications and other info visit bunn.com.

Created on: 02/06/2019

Related Products & Accessories: VLPF (2 Lower Warmers)(07400.0005)



WX2, 120V

Product #: 06310.0004



WX2A, 230V 50/60HZ

Product #: 06310.0006



WX1, 120V

Product #: 06450.0004



FILTERS,REGULAR1M 500/2 50/CL

Product #: 20115.0000



FUNNEL W/DECALS, BLACK PLASTIC

Product #: 20583.0003



WATER FILTER SYSTEM,EQ-17-TL

Product #: 30200.1000



WATER FILTER,IN LINE ED-17-TL

Product #: 30201.1001

BUNN® reserves the right to change specifications and product design without notice. Such revisions do not entitle the buyer to corresponding changes, improvements, additions or replacements for previously purchased equipment. For most current specifications and other info visit bunn.com.

Serving & Holding Options: VLPF (2 Lower Warmers)(07400.0005)



EASY POUR®,(BLK) 1/CS

Product #:06100.0101



EASY POUR®,(BLK) 2/CS

Product #:06100.0102



EASY POUR®,(BLK) 3/CS

Product #:06100.0103



EASY POUR®,(BLK) 6/CS

Product #:06100.0106



EASY POUR®,(BLK) 12/CS

Product #:06100.0112



EASY POUR®,(BLK) 24/CS

Product #:06100.0124



EASY POUR,(BLK) 6-1/CS

Product #:06100.0156



EASY POUR®,(ORN) 1/CS

Product #:06101.0101



EASY POUR®,(ORN) 2/CS

Product #:06101.0102



EASY POUR®,(ORN) 3/CS

Product #:06101.0103



EASY POUR®,(ORN) 6/CS

Product #:06101.0106



EASY POUR,(ORN) 12/CS

Product #:06101.0112



EASY POUR®,(ORN) 24/CS

Product #:06101.0124



DECANTER,GLASS-BLK 12C 24/CS

Product #:42400.0024



DECANTER,GLASS-BLK 12CUP 1PK

Product #:42400.0101



DECANTER,GLASS-BLK 12C 3/CS

Product #:42400.0103



DECANTER,GLASS-ORN 12C 24/CS

Product #:42401.0024



DECANTER, GLASS-ORN 12 CUP 1PK

Product #:42401.0101



DECANTER,GLASS-ORN 12C 3/CS

Product #:42401.0103

BUNN® reserves the right to change specifications and product design without notice. Such revisions do not entitle the buyer to corresponding changes, improvements, additions or replacements for previously purchased equipment. For most current specifications and other info visit bunn.com.

Created on: 02/06/2019

3216e
Provided by 3rd party vendor/IMPERIAL

THERMOPRO™ G3 DIGITAL COFFEE BREWING SYSTEMS

MODELS: TP15S SINGLE, TP15T TWIN, THERMOPRO & MILANO SERVER

3216e
ITEM NO

CNH/OSU TAHLEQUAH
PROJECT

DATE



Easy Gourmet Brewing.

- G3 Digital Control Module provides precise control over all aspects of brewing in an intuitive, easy-to-operate system
- Pre-Set Global Recipes at the touch of a single button – no complex equipment required
- Stainless steel ThermoPRO™ vacuum-sealed servers keep coffee fresh, hot and flavorful
- Single unit is field selectable for One, Two or Three Batch brewing
- Enhanced Recovery Circuitry – boosts performance on 220V/single phase models
- All features Standard from Curtis... extra from others



G3 GENERATION THREE

The Curtis ThermoPro™ Brewing System

Incredible Advanced Design — Incredibly Easy to Use

With Generation Three (G3) technology and the state-of-the-art ThermoPro™ vacuum sealed servers, Curtis introduces the most advanced gourmet coffee brewing system on the market today. The unique Universal Control Module, easy to read display and simple interface make operating easy.

ThermoPro™ systems are available in both single and twin, designed to optimize coffee quality and flavor, while reducing maintenance and service. The unique stainless-steel vacuum servers maintain coffee temperature, preserving the rich and bold flavor without the need for additional heat. On-board self diagnostics continually sense proper brewing operations and a Service Phone Number and error code are displayed in the event technical assistance is required.

Curtis G3 Technology combines precision brewing capability with an easy-to-use interface. All brewing functions are displayed in real time, not a coded system of indicators. Curtis ThermoPro systems are factory set for out-of-the-box operation with pre-programmed recipes that ensure a consistent brew, every time. And with scroll-through menus, it's just as easy to fine-tune the brewing process for your exacting gourmet coffee profile.



G3 Digital Control Module

Complex flavor from simple controls.

- **Precise, digital fine-tuning of the entire brewing process — optimizes signature coffee flavor and provides consistent brewing every time.**
- **Provides gourmet coffee control with Pre-Infusion, Pulse Brewing, Water Bypass, Cold Brew Lock-Out and much more.**
  Each is easily adjusted right from the front panel... NO manual adjustments needed.

*Recipes are based on SCAA Guidelines.

Simplicity combined with complete flexibility.

- **Proprietary Heating Algorithm** maintains brew temperature to ensure optimal flavor extraction.
- **Fully customizable brew settings** can be set for each individual brew button.
- **Simple, easy-to-understand graphic overlay.**
- **Large LCD display** provides scroll-through menu of programming options.
- **All brewer functions are clearly displayed in real time.**
- **Single control module** — speeds learning across multiple systems.
- **Automatic notification of preventative maintenance needs or service requirements.**
- **Common parts and front access** create an easy to service unit.
- **Error codes/condition/service phone number automatically displayed.**
- **Encapsulated control board, components and switches** protect against steam, water and impact.
- **User defined Energy Saving Circuitry** reduces power consumption.
- **One touch grind-to-brew** — when combined with a Curtis ILGD Digital Grinder, brew cycle is automatically adjusted to correspond with selected grind amount for error-free brewing (three batch option only).
- **High-volume, hot water faucet** for instant beverages and other hot water needs.
- **Nationwide network of factory trained service professionals.**
- **Standard electronic brew cone lock.**

PRE–SET GOURMET BREW RECIPES... AT THE TOUCH OF A BUTTON.

While other "gourmet" brewing systems may require expensive and complicated additional equipment to fine tune the brewing process, Curtis ThermoPro Systems accomplish these settings at the touch of a button!

One simple button lets you select your brew from a variety of pre-programmed coffee recipes. When enabled, the recipe programming will precisely set ALL gourmet functions automatically... from pre-infusion to pulse brewing to water bypass percent. And, you can fine tune your signature beverage even further.

Standard recipes include: Gourmet Standard*, Dark Roast, Light Roast, High Yield, Filter Pack and Decaf.

**Our out-of-the-carton default setting.*



ThermoPro TP15S with Milano TLCG15 Server.



ThermoPro TP15S with ThermoPro 2.2L Airpot.

Versatility for your Versatile Needs

Because different operations require different types of service, the ThermoPro™ Digital Coffee Brewing System is designed to meet your specific needs. Whether you are brewing for restaurant table service, a hotel lobby or the neighborhood C-Store, the ThermoPro™ is ready. In both the single and twin models, ThermoPro Vacuum Servers will always provide the freshest coffee available. For added elegance, choose the stylish, contemporary Curtis Milano Server.



Optional WS1 Wire Stand with ThermoPro TXSG15 Server.

ThermoPro or Milano Stainless Steel Vacuum Servers — designed to provide optimum heat retention.

- Attractive design complements hotel lobbies, service bars or even back of the house.
- Stainless steel liner for commercial durability.
- Integral base makes it easy to create remote coffee stations.
- Brew through top keeps heat and flavor in.
- Uniquely designed faucet and sight glass connections practically eliminates heat loss.
- Sturdy handles and dual function faucet guard provide multiple carrying points for ease of transportation.
- Separate drip mat/tray for easy cup location and cleaning.
- Significant faucet clearance for cup and decanter service.
- Includes sight glass cleaning brush.

TP15T Twin

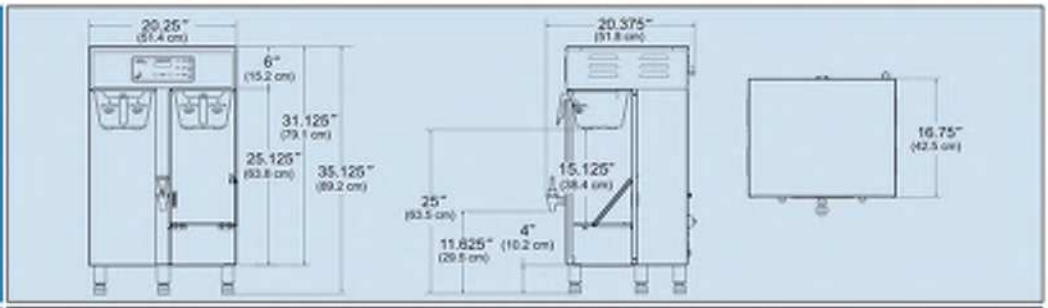

TP15S Single

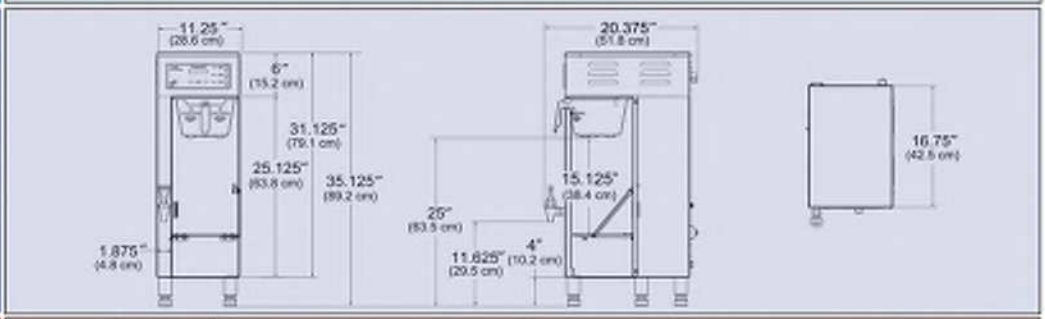

TXSG15
ThermoPro Server

TLCG15
Milano Server

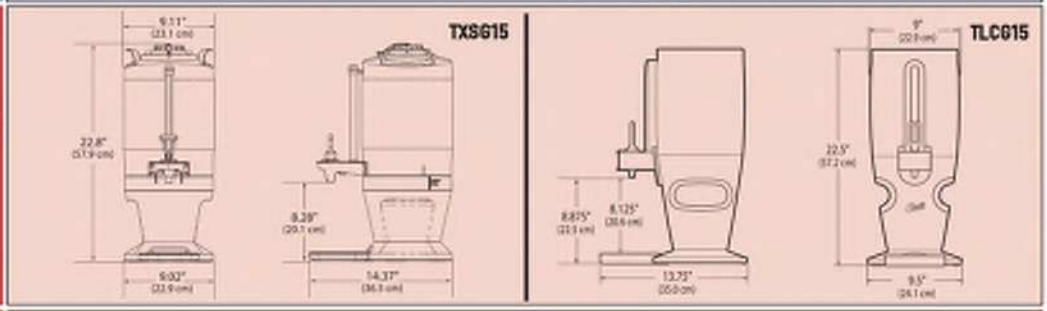

WS1
Wire Stand

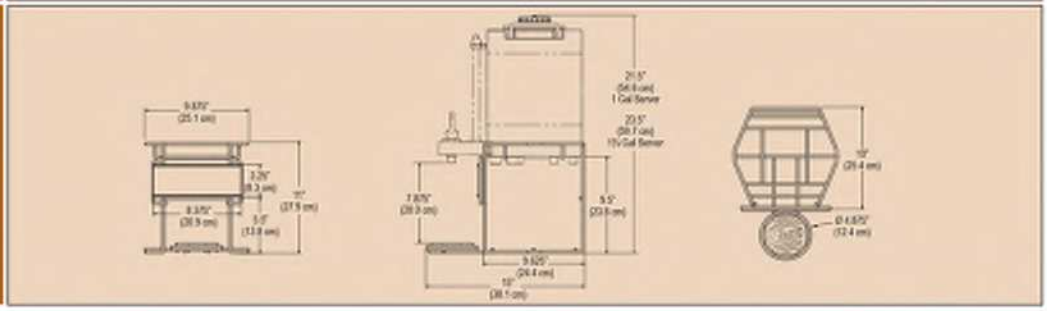

Specifications	Batch Brewing Selections	Finished Brewing Capacity	Dimensions (H x W x D)	Voltage	Power Requirements	Water Source	Shipping Wt (lbs. w/o server	Cube (cu ft.)
TP15T Twin (includes 2 servers)	6	3 Gal. (1.5 per side)	35.125" x 20.25" x 16.75"	220V/Single Phase* 3 Wire Plus Ground	5100W/7600W***	3/8" Flare	68	14.3
TP15S Single (server included)	3	1.5 Gal.	35.125" x 11.25" x 16.75"	220V/Single Phase** 3 Wire Plus Ground	4300W	3/8" Flare	55	9.1
TXSG15 Server (includes base)	N/A	1.5 Gal.	22.8" x 9.02" x 14.37"	N/A	N/A	N/A	15	3.7
TLCG15 Server (includes base)	N/A	1.5 Gal.	22.5" 9.5" x 13.75"	N/A	N/A	N/A	14	3.7
WS1 Wire Stand	N/A	N/A	11" x 9.875" x 10"	N/A	N/A	N/A	4	1.09

*Optional 220VAC/3 Phase – Specify 3 Wire or 4 Wire Plus Ground. ** Optional Dual Voltage 120/220VAC
*** Field convertible to higher wattage. Export Voltage Available – contact factory.

Field Changeable Enhanced Recovery Circuitry

ThermoPro twin* units ship standard with a robust 5000 watts of recovery power. Should you have a higher rated circuit at the installation, a single connection change*** boosts the ThermoPro to a powerful 7500 watts providing enhanced recovery and brewing speed.

NOTE: *220VAC/Single Phase Models Only
*** Should be connected only by a qualified installation technician.

WARNING - These products can expose you to chemicals including Acrylamide and Bisphenol A (BPA), which are known to the State of California to cause cancer and birth defects or other reproductive harm. For more information visit www.P65Warnings.ca.gov

WILBUR CURTIS COMPANY, INC.
6913 Acco Street, Montebello, CA 90640-5403
Telephone: 800-421-6150 · 323-837-2300
Fax: 323-837-2406
www.wilburcurtis.com

AUG/2018 F-3323 rev.J

3217

DIGITAL COFFEE GRINDER

MODEL: ILGD



ILGD

3217

ITEM NO CNH/OSU TAHLEQUAH

PROJECT

DATE

Advanced Digital System™ – A Curtis Exclusive

ADS™ represents the future of coffee equipment technology, giving operators unparalleled control, consistency, quality and ease of use.

ADS™ Features:

- **Digital Superiority –** Electronic solid state technology centralizes controls on the front Touchkey Panel for easy programming and precise performance.
- **Touchkey Control Panels –** Provides up to 10 times longer working life than mechanical switches and a smooth surface for easier cleaning and maintenance.
- **Fully Programmable Grind Cycle –** Digital LED readout shows grind cycle length clearly. Set grind cycle from 1 to 99 seconds
- **Self-Diagnostic –** ADS™ technology expedites service.
- **One Touch Grind-to-Brew –** When combined with the GEMGT or ThermoPro™, digital controls automatically select brewing cycle to correspond with selected grind quantity for error-proof brewing every time.

From the first name in coffee brewing comes the first coffee grinders of the 21st century! The Digital InterLock Series from Curtis, with ADS™ (Advanced Digital System) technology. These coffee grinders enable users to link grinder to brewer for the perfect brew, every time.

Specially designed and styled for use with Gemini® and ThermoPro™ Series brewers with 3-Batch option, these advanced grinders interlock for complimentary systems, making fresh grind/fresh brew programs a snap. And Dual Hopper capacity gives you the flexibility to fresh grind from two separate selections, making your specialty or decaf coffee as fresh as your house blend.

The Easiest Interface Ever

Digital Controls

LED Display — Indicates grind cycle length for absolute accuracy of grind. Dial-in perfect grind length, eliminate guessing.

Grind Select Buttons — Select from small, medium, large and the InterLockE system automatically locks in grind time on the brewer (3-batch only option). Each button is fully programmable to your specifications.

Grind Select Indicator Lights — Lets you know clearly which cycle length is currently grinding.

On/Off Switch



ADVANCED DIGITAL SYSTEM

Factory-set grind cycles can be easily changed.

Grind time for each cycle is accurately displayed by the read-out. To change, simply follow these steps (each button is set independently):

- Turn the grinder off. Place a brew cone and filter in the machine.
- Press and hold the grind cycle button. At the same time press and release the ON/OFF button.
- Now press the grind cycle button again. The display will indicate its current setting. Immediately following it will begin grinding. The display will indicate the elapsed time from zero.
- When the desired level is reached, release the button.*
- Wait until the motor has stopped completely, and press any OTHER button on the same side. This sets the time and exits the programming mode.

NOTE: *Add time by pressing and holding the flashing button until the desired level is reached.

Digital InterLock™ System — Only from Curtis.

Automatic Grinder-to-Brewer Interface

Designed for fresh grind/fresh brew programs, the Curtis Digital InterLock™ System connects compatible Digital Control Coffee Brewers to Digital Control Grinder for simple, error-proof grinding and brewing.

With the push of a button, the Grinder automatically conveys the selected grind volume to the brewing system. The brew selection is then "locked-in" to the corresponding grind cycle...incorrect cycles are "locked out." If both brewer sides are in use, the Grinder's memory stores the information and waits until a side is available.

Standard Features

- **Dual-Hoppers –** Include decaf or a specialty coffee in your fresh grind/fresh brew program.
- **Infinitely Adjustable Grind Settings –** From extra coarse to extra-fine grinding.
- **Larger Hopper Capacity than Competitive Models –** Reduces labor costs with less frequent refills.
- **Positive Flow Auger –** For uninterrupted coffee dispensing.
- **Self-Adjusting Brew Rails –** Easily handle large Gemini brew baskets.
- **Wide Match Profile –** Brew rails never extend beyond housing with larger baskets.
- **Large Grinding Burrs –** Provide faster more efficient operation.
- **Accurate and Consistent Throw –** For even distribution, chaff reduction.
- **Uniform Grind**
- **Powerful 1/2 hp Motor –** Equipped with safety circuit breaker.
- **Standard 120VAC Operation**

ILGD

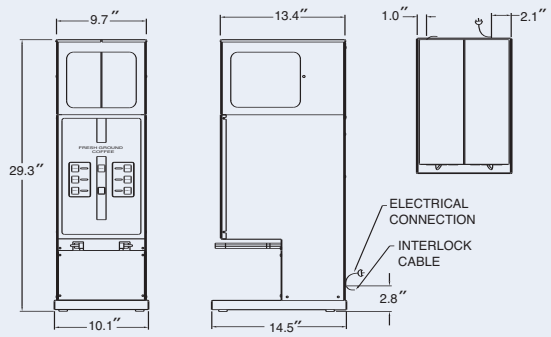

SPECIFICATIONS	ILGD
Grind Cycles (Per Side)	3 per side
Hopper Capacity (Whole Beans)	7.5 lbs ea. side
Timer	Digital InterLock
Portion Range	1 to 99 Seconds
Dimensions (H x W x D)	29.3″ x 10.1″ x 14.5″
Voltage	120VAC/60Hz
Power Requirements	8.0A
Motor	1/2 hp
Shipping Weight (lbs.)	60 lbs.
Cube (cu. ft.)	4.6 cu. ft.

FACTORY SETTINGS	ILGD GRINDER
Volume/Grind Setting	Large - 15 sec. Medium - 10 sec. Small - 5 sec.

WILBUR CURTIS COMPANY, INC.
6913 Acco Street, Montebello, CA 90640-5403
Telephone: 800-421-6150 · 323-837-2300
Fax: 323-837-2406
www.wilburcurtis.com

© 2001-2006 Wilbur Curtis Company, Inc.

Printed in U.S.A. MAY/06 – 7829 – F-3122 – Rev A

MODELS
8792, 8793

DUAL AUTOMATIC AIRPOT COFFEE BREWERS

8792 Gourmet 1000™ Dual Automatic Airpot Brewer
(with Hot Water Faucet)

8793 Gourmet 1000 Dual Automatic Airpot Brewer
(with Hot Water Faucet)

Gourmet 1000™ Dual Airpot brewers offer volume brewing, proper extraction and holding capacity. Traditional electromechanical controls and a high level of component compatibility mean many years of dependable, quality brewing. These uniquely designed units eliminate flow control problems and resist clogging in adverse water conditions. Coffee is brewed into an airpot which is easily transportable to remote serving areas where coffee will remain preserved for optimal temperature and taste.



Model 8792/8793
shown with optional 7759

Features

- **Dual brewer** will accommodate demand fluctuations and brewing variables.
- **A high level of commonality of parts** with other Bloomfield models will significantly reduce the inventory of spare parts required to service many body styles.
- Exclusive design provides **easy access to components** for quick service.
- **Water volume adjustments** can be made with ease, no panels to remove or tools required.
- **Ready-to-Brew light** indicates the proper water temperature to help eliminate the guesswork in brewing.
- **Premium quality thermostat** has a full-length stainless steel sensing bulb that recognizes water temperature extremely accurately and cycles less frequently.
- **Independent front-mounted hot water faucet** allows drawing of hot water without affecting coffee taste or brewing cycle.
- Built-in **pour over feature** provides flexibility.
- **Superior sprayhead design** spreads water over the coffee grounds, creating agitation and a floating action that completely saturates the coffee to capture the full, rich essence.
- **Unique water valve with built-in flow control** assures consistent operation at 20-80 p.s.i.
- **One-piece drawn stainless steel water tank** has a superior design for extended life.
- **Rugged base rails** provide stability and strength, while minimizing brewer height and locating placement of airpot.
- High quality easy to clean **stainless steel construction**.
- **Convenient tank heater** on/off switches located on the rear of unit povides energy savings options.

Accessories

Bloomfield offers a full line of airpot, thermal servers and coffee grinders.

BLOOMFIELD®

BLOOMFIELD

MODELS
8792, 8793

E9253 STD 4 E9253

DIMENSIONS: INCH / (MM)

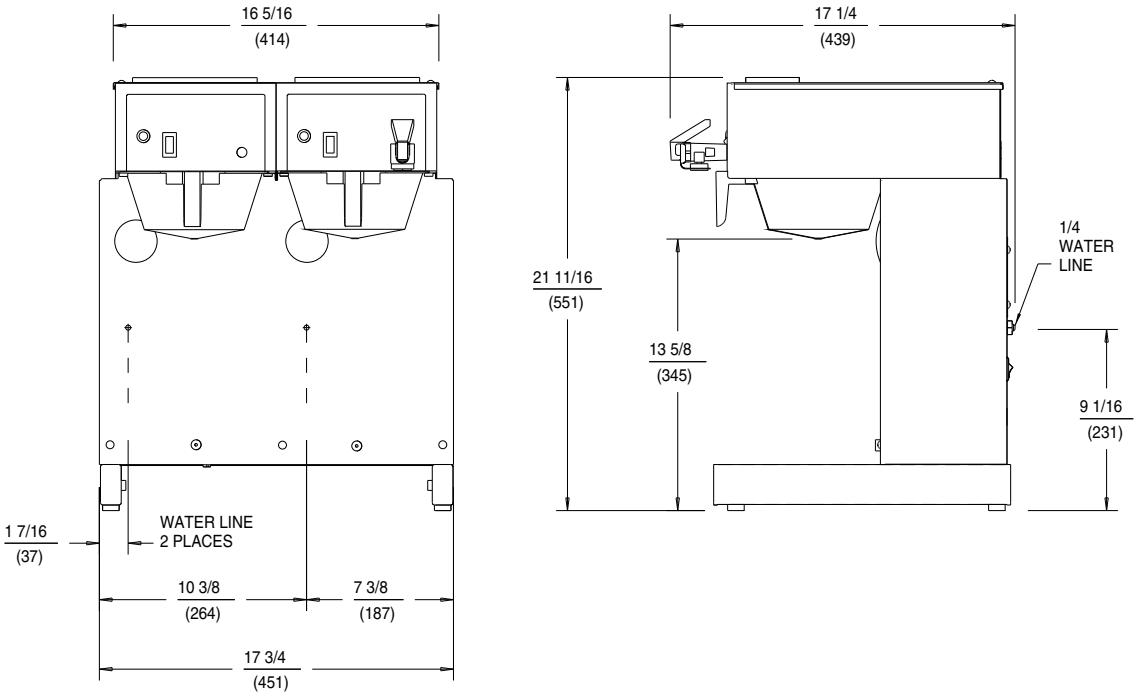

SPECIFICATIONS:

MODELS	WATTS	VOLTS	AMPS	PHASE	POWER SUPPLY CORD
8792	4000	120/240 4 WIRE	17	SINGLE	NONE
8793	7000	115/230 4 WIRE	30.5	SINGLE	NONE

NOTE: Specifications are subject to change without notice and are not intended for installation purposes. See operation and maintenance manual for complete instructions.

ACCESSORIES: *See the Bloomfield Brew Brew product catalog for a complete listing of brewers and accessories.*



Complete line of Airpots
for use with brewers with 13 3/8" clearance heights

2.5 Liter Thermal Servers
for use with brewers with 17 1/2" clearance heights

1.9 Liter Hand Held Pours
for use with brewers with 9 1/2" clearance heights

BLOOMFIELD INDUSTRIES
2 ERIK CIRCLE, PO BOX 280, VERDI, NV 89439 U.S.A.
(888) 356-5362 • FAX (800) 356-5142 • www.wellsbloomfield.com • Export: (775) 689-5700 • (775) 689-5972
5850 KEATON CRESCENT, MISSISSAUGA, ONTARIO L5R 3K2 CANADA • (905) 507-1700 • FAX (905) 507-1777 • www.bloomcan.com
©2001 BLOOMFIELD INDUSTRIES • PRINTED IN THE U.S.A. • 04/01 • REV (-) • PART NO. 75214

BLOOMFIELD®

BLOOMFIELD

MODELS
8788, 8782, 8782XL

AUTOMATIC AIRPOT COFFEE BREWERS

8782 / 8788 Gourmet 1000™ Automatic Airpot Coffee Brewer

(with Hot Water Faucet)

8782XL Gourmet 1000™ Extra Low Automatic Airpot Coffee Brewer

(with Hot Water Faucet)



Model 8782XL
shown with optional 7874



Model 8788/8782
shown with optional 7752

Airpot Coffee brewers offer volume brewing, proper extraction and holding capacity in a limited space. The 8782XL, at an extra low height of only 17 3/4", is sure to fit in those tight counters. These uniquely designed units eliminate flow control problems. and resist clogging in adverse water conditions. Coffee is brewed into a thermal server or airpot for easy transport to remote serving areas where the coffee will be preserved for optimal temperature and taste.

Features

- A high level of **commonality of parts** withother Bloomfield brewers will significantly reduce the inventory of spare parts required to service many body styles.
- Exclusive design provides **easy access** to components for quick, efficient service.
- **Water volume adjustments** can be made with ease; no tools required and no panels to remove.
- **Ready-to Brew light** indicated the proper water temperature to help eliminate guesswork in brewing.
- **Built-in pour over feature** provides flexibility of installation.
- **Premium quality thermostat** has a stainless steel bulb that recognizes water temperature extremely accurately and cycles less frequently.
- **Superior sprayhead design** spreads water over the coffee grounds, creating aggitation and a floating action that completely saturates the coffee to capture the full rich essence of every bean.
- **Unique water valve with built-in flow control** assures consistent operation for inlet water pressures between 20 - 80 p.s.i..
- **Independent front mounted hot water faucet** allows drawing of hot water without affecting coffee taste or brew cycle.
- **One-piece drawn stainless steel water tank** has a superior design for extended life.
- **Rugged base rails** provide stability and strength while minimizing brewer herght, and provides easy placement of airpot.
- High quality easy to clean **stainless steel construction**.

Accessories

Bloomfield offers a full line of airpots, thermal servers and coffee grinders.

BLOOMFIELD®

BLOOMFIELD

3218 alternate

MODELS
8788, 8782, 8782XL

DIMENSIONS: INCH (MM)

DIMENSIONS

MODEL	A	B	C	D	E
8782 / 8782CA	17 1/8 (435)	13 3/4 (349)	2 5/16 (58)	21 3/4 (552)	9 1/4 (235)
8782XL / 8782XLCA	13 1/8 (333)	9 3/4 (248)	1 5/16 (33)	17 3/4 (451)	5 1/4 (133)
8788	17 1/8 (435)	13 3/4 (349)	2 5/16 (58)	21 3/4 (552)	9 1/4 (235)

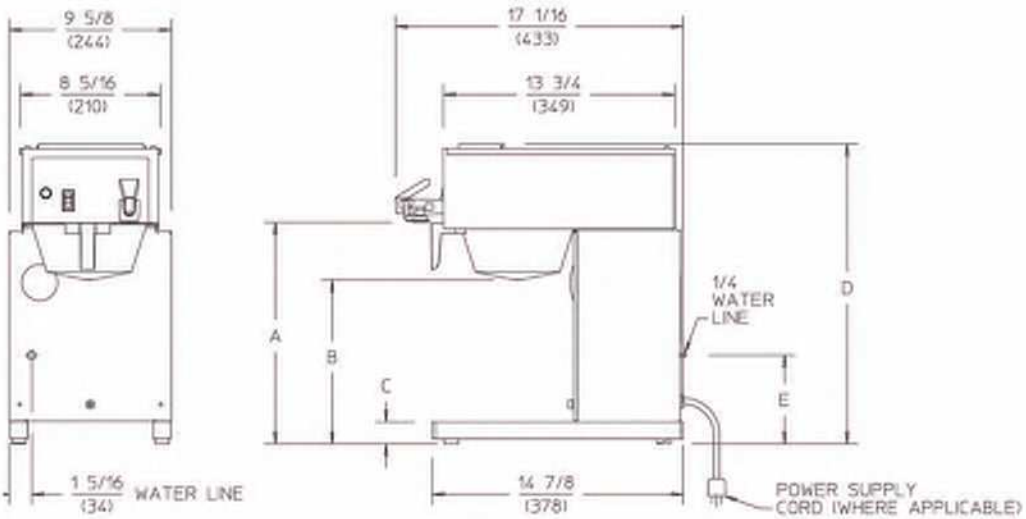

SPECIFICATIONS:

MODELS	WATTS	VOLTS	AMPS	PHASE	POWER SUPPLY CORD
8782 / 8782XL	1800	120	15	SINGLE	NEMA 5-15P
8782CA / 8782XLCA	1500	120	12.5	SINGLE	NEMA 5-15P
8788	3500	115/230 4-WIRE	15	SINGLE	NONE

Meets Canadian standards

NOTE: Specifications are subject to change without notice and are not intended for installation purposes. See operation and maintenance manual for complete instructions.

ACCESSORIES: *See the Bloomfield Brew Brew product catalog for a complete listing of brewers and accessories.*



Complete line of Airpots
for use with brewers with 13 3/8" clearance height

2.5 Liter Thermal Servers
for use with brewers with 17 1/2" clearance height

1.9 Liter Hand Held Pours
for use with brewers with 17 1/2" clearance height

Bloomfield · 10 Sunnen Dr. St. Louis, MO 63143 U.S.A. ·
Phone: (314) 678-6336 · Fax (314) 781-3636www.wellsbloomfield.com
© 2011 Wells Bloomfield · Printed in the U.S.A.

BLOOMFIELD

TRUE MANUFACTURING CO., INC.
U.S.A. FOODSERVICE DIVISION
2001 East Terra Lane • O'Fallon, Missouri 63366-4434 • (636)240-2400
Fax (636)272-2408 • Toll Free (800)325-6152 • Intl Fax# (001)636-272-7546
Parts Dept. (800)424-TRUE • Parts Dept. Fax# (636)272-9471 • www.truemfg.com

Project Name: _____
Location: _____
Item #: _____ *Qty:* _____
Model #: _____

AIA #
SIS #

Model:
T-43-HC

T-Series:
Reach-In Solid Swing Door Refrigerator with Hydrocarbon Refrigerant



T-43-HC

- True's solid door reach-in's are designed with enduring quality that protects your long term investment.
- Designed using the highest quality materials and components to provide the user with colder product temperatures, lower utility costs, exceptional food safety and the best value in today's food service marketplace.
- High capacity, factory balanced, refrigeration system holds 33°F to 38°F (.5°C to 3.3°C) for best food preservation in extreme conditions.
- Factory engineered, self-contained, capillary tube system using environmentally friendly R290 hydro carbon refrigerant that has zero (0) ozone depletion potential (ODP), & three (3) global warming potential (GWP).
- Stainless steel solid doors and front. The finest stainless available with higher tensile strength for fewer dents and scratches.
- LED interior lighting provides more even lighting throughout the cabinet. Safety shielded.
- Adjustable, heavy duty PVC coated shelves.
- Positive seal self-closing doors. Lifetime guaranteed door hinges and torsion type closure system.

Bottom mounted units feature:

- "No stoop" lower shelf.
- Storage on top of cabinet.
- Compressor performs in coolest, most grease free area of kitchen.
- Easily accessible condenser coil for cleaning.

ROUGH-IN DATA

Specifications subject to change without notice.
Chart dimensions rounded up to the nearest ⅛" (millimeters rounded up to next whole number).

Model	Doors	Shelves	Cabinet Dimensions (inches) (mm) W	D	H*	HP	Voltage	Amps	NEMA Config.	Cord Length (total ft.) (total m)	Crated Weight (lbs.) (kg)
T-43-HC	2	6	47 1194	29½ 750	78⅜ 1991	½ ⅓	115/60/1 230-240/50/1	5.4 2.4	5-15P ▲	Varies Varies	380 173

* Height does not include 5" (127 mm) for castors or 6" (153 mm) for optional legs.

▲Plug type varies by country.

MADE WITH INNOVATION IN THE USA · 5 YEAR COMPRESSOR WARRANTY USA · ENERGY STAR · c UL us · CE · natural refrigerant

6/18-A Printed in U.S.A.

APPROVALS:

AVAILABLE AT:

Model:
T-43-HC

T-Series:
Reach-In Solid Swing Door Refrigerator with Hydrocarbon Refrigerant

STANDARD FEATURES

DESIGN
- True's commitment to using the highest quality materials and oversized refrigeration systems provides the user with colder product temperatures, lower utility costs, exceptional food safety and the best value in today's food service marketplace.

REFRIGERATION SYSTEM
- Factory engineered, self-contained, capillary tube system using environmentally friendly R290 hydro carbon refrigerant that has zero (0) ozone depletion potential (ODP), & three (3) global warming potential (GWP).
- High capacity, factory balanced refrigeration system that maintains cabinet temperatures of 33°F to 38°F (.5°C to 3.3°C) for the best in food preservation.
- State of the art, electronically commutated evaporator and condenser fan motors. ECM motors operate at higher peak efficiencies and move a more consistent volume of air which produces less heat, reduces energy consumption and provides greater motor reliability.
- Bottom mounted condensing unit positioned for easy maintenance. Compressor runs in coolest and most grease free area of the kitchen. Allows for storage area on top of unit.

CABINET CONSTRUCTION
- Exterior - Stainless steel front. Anodized quality aluminum ends, back and top.
- Interior - attractive, NSF approved, white aluminum liner. Stainless steel floor with coved corners.
- Insulation - entire cabinet structure and solid door are foamed-in-place using a high density, polyurethane insulation that has zero ozone depletion potential (ODP) and zero global warming potential (GWP).
- Welded, heavy duty steel frame rail, black powder coated for corrosion protection.
- Frame rail fitted with 4" (102 mm) diameter stem castors - locks provided on front set.

DOORS
- Stainless steel exterior with white aluminum liners to match cabinet interior. Doors extend full width of cabinet shell. Door locks standard.
- Lifetime guaranteed recessed door handles. Each door fitted with 12" (305 mm) long recessed handle that is foamed-in-place with a sheet metal interlock to ensure permanent attachment.
- Positive seal self-closing doors. Lifetime guaranteed door hinges and torsion type closure system.
- Magnetic door gaskets of one piece construction, removable without tools for ease of cleaning.

SHELVING
- Six (6) adjustable, heavy duty PVC coated wire shelves 20⅞"L x 22½"D (531 mm x 572 mm). Four (4) chrome plated shelf clips included per shelf.
- Shelf support pilasters made of same material as cabinet interior; shelves are adjustable on ½" (13 mm) increments.

LIGHTING
- LED interior lighting provides more even lighting throughout the cabinet. Safety shielded.

MODEL FEATURES
- Exterior temperature display.
- Evaporator is epoxy coated to eliminate the potential of corrosion.

ELECTRICAL
- Unit completely pre-wired at factory and ready for final connection to a 115/60/1 phase, 15 amp dedicated outlet. Cord and plug set included.



115/60/1
NEMA-5-15R

OPTIONAL FEATURES/ACCESSORIES
Upcharge and lead times may apply.
- ❑ 6" (153 mm) standard legs.
- ❑ 6" (153 mm) seismic/flanged legs.
- ❑ Alternate door hinging (factory installed).
- ❑ Additional shelves.
- ❑ Half door bun tray racks. Each holds up to eleven 12"L x 20"D (305 mm x 508 mm) sheet pans (sold separately).
- ❑ Full door bun tray racks. Each holds up to twenty-two 12"L x 20"D (305 mm x 508 mm) sheet pans (sold separately).

PLAN VIEW

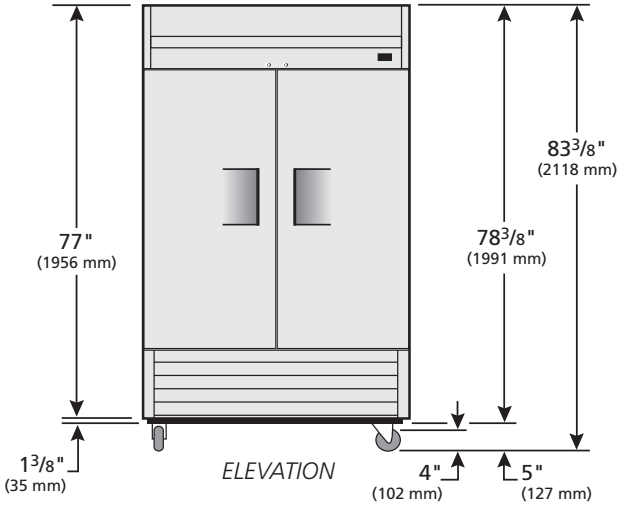

ELEVATION

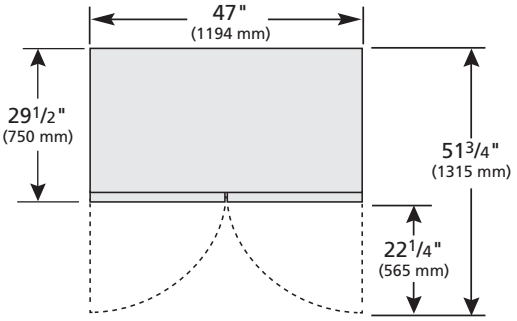

PLAN VIEW

WARRANTY
Three year warranty on all parts and labor and an additional 2 year warranty on compressor. (U.S.A. only)

METRIC DIMENSIONS ROUNDED UP TO THE NEAREST WHOLE MILLIMETER

SPECIFICATIONS SUBJECT TO CHANGE WITHOUT NOTICE

Model	Elevation	Right	Plan	3D	Back
T-43-HC					

TRUE MANUFACTURING CO., INC.
2001 East Terra Lane • O'Fallon, Missouri 63366-4434 • (636)240-2400 • Fax (636)272-2408 • Toll Free (800)325-6152 • Intl. Fax# (001)636-272-7546 • www.truemfg.com

TRUE MANUFACTURING CO., INC.
U.S.A. FOODSERVICE DIVISION
2001 East Terra Lane • O'Fallon, Missouri 63366-4434 • (636)240-2400
Fax (636)272-2408 • Toll Free (800)325-6152 • Intl Fax# (001)636-272-7546
Parts Dept. (800)424-TRUE • Parts Dept. Fax# (636)272-9471 • www.truemfg.com

Project Name: _____
Location: _____
Item #: _____ *Qty:* _____
Model #: _____

AIA #
SIS #

Model:
T-43F-HC

T-Series:
Reach-In Solid Swing Door Freezer with Hydrocarbon Refrigerant



T-43F-HC

- True's solid door reach-in's are designed with enduring quality that protects your long term investment.
- Designed using the highest quality materials and components to provide the user with colder product temperatures, lower utility costs, exceptional food safety and the best value in today's food service marketplace.
- Factory engineered, self-contained, capillary tube system using environmentally friendly R290 hydro carbon refrigerant that has zero (0) ozone depletion potential (ODP), & three (3) global warming potential (GWP).
- High capacity, factory balanced refrigeration system that maintains -10°F (-23.3°C) temperatures. Ideal for both frozen foods and ice cream.
- Stainless steel solid doors and front. The finest stainless available with higher tensile strength for fewer dents and scratches.
- Adjustable, heavy duty PVC coated shelves.
- Positive seal self-closing doors. Lifetime guaranteed door hinges and torsion type closure system.
- Automatic defrost system time-initiated, temperature-terminated. Saves energy consumption and provides shortest possible defrost cycle.

Bottom mounted units feature:

- "No stoop" lower shelf.
- Storage on top of cabinet.
- Compressor performs in coolest, most grease free area of kitchen.
- Easily accessible condenser coil for cleaning.

ROUGH-IN DATA

Specifications subject to change without notice.
Chart dimensions rounded up to the nearest ⅛" (millimeters rounded up to next whole number).

Model	Doors	Shelves	Cabinet Dimensions (inches) (mm) W	D	H*	HP	Voltage	Amps	NEMA Config.	Cord Length (total ft.) (total m)	Crated Weight (lbs.) (kg)
T-43F-HC	2	6	47 1194	29½ 750	78⅜ 1991	1 1	115/60/1 230-240/50/1	9.6 5.5	5-15P ▲	9 2.74	410 186

* Height does not include 5" (127 mm) for castors or 6" (153 mm) for optional legs.

▲Plug type varies by country.

MADE WITH INNOVATION IN THE USA · 5 YEAR COMPRESSOR WARRANTY USA · ENERGY STAR · c UL us · CE · natural refrigerant.

9/18 Printed in U.S.A.

APPROVALS:

AVAILABLE AT:

Model:
T-43F-HC

T-Series:
Reach-In Solid Swing Door Freezer with Hydrocarbon Refrigerant

STANDARD FEATURES

DESIGN
- True's commitment to using the highest quality materials and oversized refrigeration systems provides the user with colder product temperatures, lower utility costs, exceptional food safety and the best value in today's food service marketplace.

REFRIGERATION SYSTEM
- Factory engineered, self-contained, capillary tube system using environmentally friendly R290 hydro carbon refrigerant that has zero (0) ozone depletion potential (ODP), & three (3) global warming potential (GWP).
- High capacity, factory balanced refrigeration system that maintains -10°F (-23.3°C) temperatures. Ideal for both frozen foods and ice cream.
- State of the art, electronically commutated evaporator and condenser fan motors. ECM motors operate at higher peak efficiencies and move a more consistent volume of air which produces less heat, reduces energy consumption and provides greater motor reliability.
- Bottom mounted condensing unit positioned for easy cleaning. Compressor runs in coolest and most grease free area of the kitchen. Allows for storage area on top of unit.
- Automatic defrost system time-initiated, temperature-terminated. Saves energy consumption and provides shortest possible defrost cycle.

CABINET CONSTRUCTION
- Exterior - Stainless steel front. Anodized quality aluminum ends, back and top.
- Interior - attractive, NSF approved, clear coated aluminum liner. Stainless steel floor with coved corners.
- Insulation - entire cabinet structure and solid door are foamed-in-place using a high density, polyurethane insulation that has zero ozone depletion potential (ODP) and zero global warming potential (GWP).
- Welded, heavy duty steel frame rail, black powder coated for corrosion protection.
- Frame rail fitted with 4" (102 mm) diameter stem castors - locks provided on front set.

DOORS
- Stainless steel exterior with white aluminum liners to match cabinet interior. Doors extend full width of cabinet shell. Door locks standard.
- Lifetime guaranteed recessed door handles. Each door fitted with 12" (305 mm) long recessed handle that is foamed-in-place with a sheet metal interlock to ensure permanent attachment.
- Positive seal self-closing doors. Lifetime guaranteed door hinges and torsion type closure system.
- Magnetic door gaskets of one piece construction, removable without tools for ease of cleaning.

SHELVING
- Six (6) adjustable, heavy duty PVC coated wire shelves 20⅞"L x 22½"D (531 mm x 572 mm). Four (4) chrome plated shelf clips included per shelf.
- Shelf support pilasters made of same material as cabinet interior; shelves are adjustable on ½" (13 mm) increments.

LIGHTING
- LED Interior lighting - safety shielded. Lights activated by rocker switch mounted above doors.

MODEL FEATURES
- Exterior temperature display.
- Evaporator is epoxy coated to eliminate the potential of corrosion.
- Rear airflow guards prevent product from blocking optimal airflow.
- NSF/ANSI Standard 7 compliant for open food product.

ELECTRICAL
- Unit completely pre-wired at factory and ready for final connection to a 115/60/1 phase, 15 amp dedicated outlet. Cord and plug set included.



115/60/1
NEMA-5-15R

OPTIONAL FEATURES/ACCESSORIES
Upcharge and lead times may apply.
- ❑ 230 - 240V / 50 Hz.
- ❑ 6" (153 mm) standard legs.
- ❑ 6" (153 mm) seismic/flanged legs.
- ❑ Novelty baskets.
- ❑ Additional shelves.

PLAN VIEW

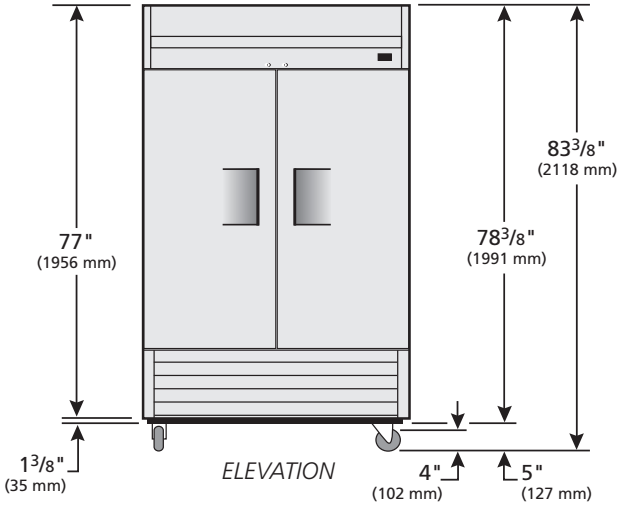

ELEVATION

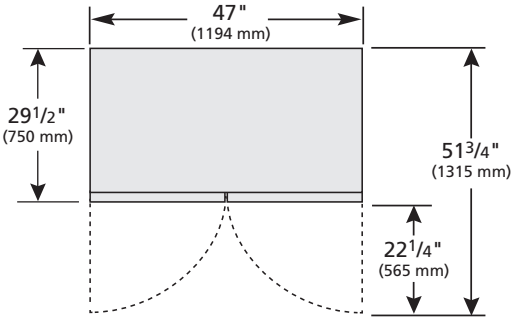

PLAN VIEW

WARRANTY
Three year warranty on all parts and labor and an additional 2 year warranty on compressor. (U.S.A. only)

METRIC DIMENSIONS ROUNDED UP TO THE NEAREST WHOLE MILLIMETER

SPECIFICATIONS SUBJECT TO CHANGE WITHOUT NOTICE

Model	Elevation	Right	Plan	3D	Back
T-43F-HC					

TRUE MANUFACTURING CO., INC.
2001 East Terra Lane • O'Fallon, Missouri 63366-4434 • (636)240-2400 • Fax (636)272-2408 • Toll Free (800)325-6152 • Intl. Fax# (001)636-272-7546 • www.truemfg.com

3269A

TRUE MANUFACTURING CO., INC.
U.S.A. FOODSERVICE DIVISION
2001 East Terra Lane • O'Fallon, Missouri 63366-4434 • (636)240-2400
Fax (636)272-2408 • Toll Free (800)325-6152 • Intl Fax# (001)636-272-7546
Parts Dept. (800)424-TRUE • Parts Dept. Fax# (636)272-9471 • www.truemfg.com

Project Name: CNH/OSU
Location: TAHLEQUAH
Item #: 3269a *Qty:*
Model #: T 23 HC

AIA #
SIS #

Model:
T-23-HC

T-Series:
Reach-In Solid Swing Door Refrigerator with Hydrocarbon Refrigerant



T-23-HC

- True's solid door reach-in's are designed with enduring quality that protects your long term investment.
- Designed using the highest quality materials and components to provide the user with colder product temperatures, lower utility costs, exceptional food safety and the best value in today's food service marketplace.
- Factory engineered, self-contained, capillary tube system using environmentally friendly R290 hydro carbon refrigerant that has zero (0) ozone depletion potential (ODP), & three (3) global warming potential (GWP).
- High capacity, factory balanced refrigeration system that maintains cabinet temperatures of 33°F to 38°F (.5°C to 3.3°C) for the best in food preservation.
- Stainless steel solid door and front. The finest stainless available with higher tensile strength for fewer dents and scratches.
- Adjustable, heavy duty PVC coated shelves.
- Positive seal self-closing door. Lifetime guaranteed door hinges and torsion type closure system.

Bottom mounted units feature

- "No stoop" lower shelf.
- Storage on top of cabinet.
- Compressor performs in coolest, most grease free area of kitchen.
- Easily accessible condenser coil for cleaning.

ROUGH-IN DATA

Specifications subject to change without notice.
Chart dimensions rounded up to the nearest ⅛" (millimeters rounded up to next whole number).

Model	Doors	Shelves	Cabinet Dimensions (inches) (mm) L	D	H*	HP	Voltage	Amps	NEMA Config.	Cord Length (total ft.) (total m)	Crated Weight (lbs.) (kg)
T-23-HC	1	3	27 686	29½ 750	78⅜ 1991	¼ ¼	115/60/1 230-240/50/1	2.2 1.2	5-15P ▲	9 2.74	285 130

* Height does not include 5" (127 mm) for castors or 6" (153 mm) for optional legs.

▲ Plug type varies by country.

APPROVALS:

AVAILABLE AT:

3269a

Model:
T-23-HC

T-Series:
Reach-In Solid Swing Door Refrigerator with Hydrocarbon Refrigerant

STANDARD FEATURES

DESIGN
- True's commitment to using the highest quality materials and optimized refrigeration systems provides the user with colder product temperatures, lower utility costs, exceptional food safety and the best value in today's food service marketplace.

REFRIGERATION SYSTEM
- Factory engineered, self-contained, capillary tube system using environmentally friendly R290 hydrocarbon refrigerant that has zero (0) ozone depletion potential (ODP), & three (3) global warming potential (GWP).
- High capacity, factory balanced refrigeration system that maintains cabinet temperatures of 33°F to 38°F (.5°C to 3.3°C) for the best in food preservation.
- State of the art, electronically commutated evaporator and condenser fan motors. ECM motors operate at higher peak efficiencies and move a more consistent volume of air which produces less heat, reduces energy consumption and provides greater motor reliability.
- Bottom mounted condensing unit positioned for easy maintenance. Compressor runs in coolest and most grease free area of the kitchen. Allows for storage area on top of unit.

CABINET CONSTRUCTION
- Exterior - Stainless steel front. Anodized quality aluminum ends. Corrosion resistant GalFan coated steel back.
- Interior - attractive, NSF approved, clear coated aluminum liner. Stainless steel floor with coved corners.
- Insulation - entire cabinet structure and solid door are foamed-in-place using a high density, polyurethane insulation that has zero ozone depletion potential (ODP) and zero global warming potential (GWP).
- Welded, heavy duty steel frame rail, black powder coated for corrosion protection.
- Frame rail fitted with 4" (102 mm) diameter stem castors - locks provided on front set.

DOOR
- Stainless steel exterior with clear aluminum liner to match cabinet interior. Door extends full width of cabinet shell. Door locks standard.
- Lifetime guaranteed recessed door handle. Door fitted with 12" (305 mm) long recessed handle that is foamed-in-place with a sheet metal interlock to ensure permanent attachment.
- Positive seal self-closing door. Lifetime guaranteed door hinges and torsion type closure system.
- Magnetic door gasket of one piece construction, removable without tools for ease of cleaning.

SHELVING
- Three (3) adjustable, heavy duty PVC coated wire shelves 22 7/8"L x 23 1/4"D (582 mm x 591 mm). Four (4) chrome plated shelf clips included per shelf.
- Shelf support pilasters made of same material as cabinet interior; shelves are adjustable on ½" (13 mm) increments.

LIGHTING
- Interior lighting - safety shielded. Lights activated by rocker switch mounted above door.

MODEL FEATURES
- Exterior temperature display.
- Evaporator is epoxy coated to eliminate the potential of corrosion.

ELECTRICAL
- Unit completely pre-wired at factory and ready for final connection to a 115/60/1 phase, 15 amp dedicated outlet. Cord and plug set included.



115/60/1
NEMA-5-15R

OPTIONAL FEATURES/ACCESSORIES
Upcharge and lead times may apply.
- ❑ 230 - 240V / 50 Hz.
- ❑ 6" (153 mm) standard legs.
- ❑ 6" (153 mm) seismic/flanged legs.
- ❑ Alternate door hinging (factory installed).
- ❑ Additional shelves.
- ❑ Half door bun tray racks. Each holds up to eleven 18"L x 26"D (458 mm x 661 mm) sheet pans (sold separately).
- ❑ Full door bun tray rack. Holds up to twenty-two 18"L x 26"D (458 mm x 661 mm) sheet pans (sold separately).

PLAN VIEW

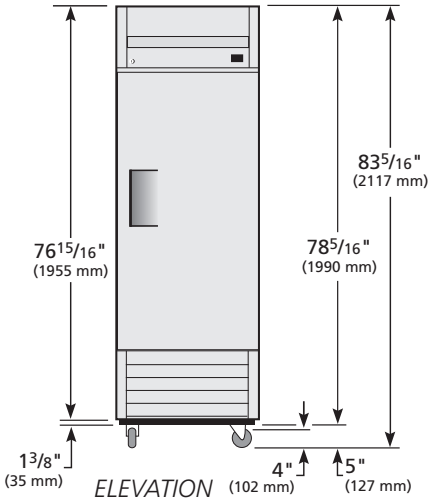

ELEVATION

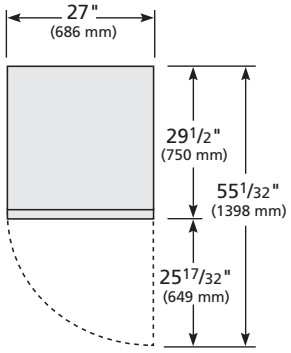

PLAN VIEW

WARRANTY
Three year warranty on all parts and labor and an additional 2 year warranty on compressor. (U.S.A. only)

METRIC DIMENSIONS ROUNDED UP TO THE NEAREST WHOLE MILLIMETER

SPECIFICATIONS SUBJECT TO CHANGE WITHOUT NOTICE

Model	Elevation	Right	Plan	3D	Back
T-23-HC	TFEY53E	TFEY03S	TFEY03P	TFEY633	

TRUE MANUFACTURING CO., INC.
2001 East Terra Lane • O'Fallon, Missouri 63366-4434 • (636)240-2400 • Fax (636)272-2408 • Toll Free (800)325-6152 • Intl. Fax# (001)636-272-7546 • www.truemfg.com

GTE21GSH/GML

GE® ENERGY STAR® 21.2 Cu. Ft. Top-Freezer Refrigerator

DIMENSIONS AND INSTALLATION INFORMATION (IN INCHES)

OVERALL DIMENSIONS	Height to top of hinge (in.) **A**	**66-3/4**
	Height to top of case (in.) **B**	**66-1/4**
	Case depth without door (in.) **C**	**29**
	Case depth less door handle (in.) **D**	**32-1/4**
	Case depth with door handle (in.) **E**	**34**
	Depth with fresh food door open 90˚ (in.) **F**	**62-3/4**
	Width (in.) **G**	**32-7/8**
	Width with door open 90˚ with door handle (in.) **H**	**35-1/2**
AIR CLEARANCES	Each side (in.)	**1/8**
	Top (in.)	**1/8**
	Back (in.)	**1**

FRONT VIEW

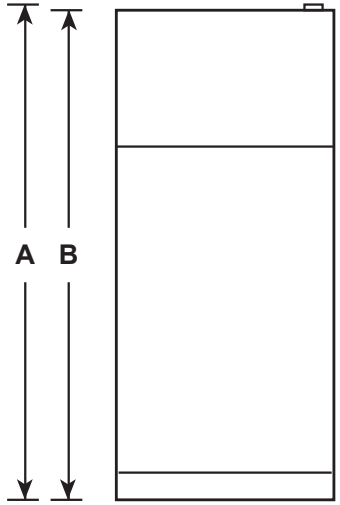

TOP VIEW

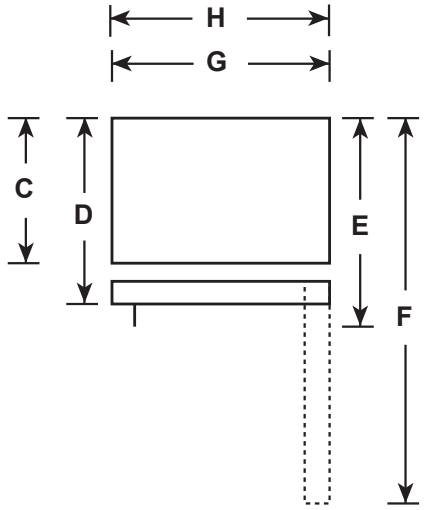



ERGY STAR®
GE has determined
product meets the
STAR guidelines
y efficiency.

GE APPLIANCES

For answers to your Monogram, GE Café™ Series, GE Profile™ Series or GE Appliances product questions, visit our website at geappliances.com or call GE Answer Center® Service, 800.626.2000.

GTE21GSH/GML

GE® ENERGY STAR® 21.2 Cu. Ft. Top-Freezer Refrigerator

FEATURES AND BENEFITS

2014 ENERGY STAR® qualified

32-3/4" wide

Upfront temperature controls – Easy-to-use controls regulate both fresh food and freezer sections

Adjustable spill-resistant glass shelves – Designed to contain spills for easy cleaning

Equipped for optional icemaker – Easily accommodates the installation of an icemaker

Snack drawer – Conveniently stores favorite foods and allows for quick, easy access

Adjustable-humidity drawers – Controls helps food stay fresh

Large door bins – Deep bins handle large containers in the door and free up valuable shelf space

Wire freezer shelf – Provides additional storage for frozen foods

Spillproof freezer floor – Seamless design of the freezer floor wipes up easily for quick cleanup

Model GTE21GTHSS – Stainless steel

Model GTE21GMLES – Slate

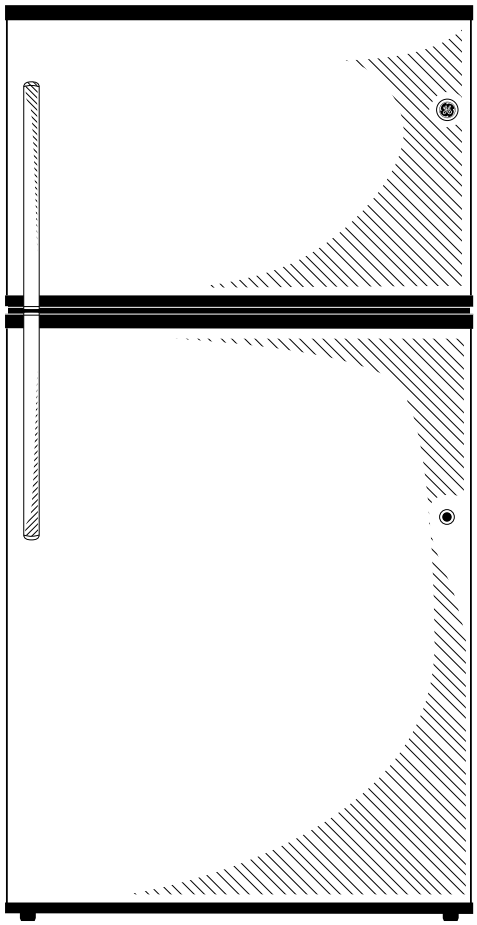

ADA COMPLIANT

UFAS COMPLIANT

GE APPLIANCES

For answers to your Monogram, GE Café™ Series, GE Profile™ Series or GE Appliances product questions, visit our website at geappliances.com or call GE Answer Center® Service, 800.626.2000.

ENERGY STAR

As an ENERGY STAR® partner, GE has determined that this product meets the ENERGY STAR guidelines for energy efficiency.

Specification Revised 2/18

FRIGIDAIRE PROFESSIONAL

All Refrigerator

FPRU19F8RF

3269e
SINGLE DOOR REFRIGERATOR
PHOTO REFLECTS COMPANION FREEZER W OPTIONAL TRIM KIT

18.6 Cu. Ft.



Shown with companion, All-Freezer model FPFU19F8RF and optional coordinated Dual 75" Louvered Trim Kit (TRIMKITEZ2).

Signature Features



PureAir Ultra® Filtration System
Fresh air offers great taste. PureAir Ultra® Filtration removes up to 7 times more odor than baking soda to keep ingredients tasting fresh.[1]



SpacePro™ Shelving System
Offers quick access to fresh ingredients with organizational solutions designed for space optimization including SpacePro™ Door Bins, SpacePro™ Crisper Bins and SpacePro™ Full-Width Drawer.



Smudge-Proof™
Resists fingerprints and cleans easily.

Product Dimensions

Height (Cabinet Incl. Hinge)	70-5/8"
Width	32"
Depth (Including Door)	26-1/2"

More Easy-To-Use Features

Automatic Alerts
Alerts you if the door is left open, if the temperature rises or if the power goes out so your food stays at its optimal temperature.

SpacePro™ Crisper Bins
Keep a variety of foods fresh and easily accessible with our SpacePro™ Crisper Bins.

SpacePro™ Full-Width Drawer
Fits a variety of fresh foods for quick access.

SpacePro™ Shelving
Optimize your refrigerator space with adjustable shelving.

SpacePro™ Door Bins
Access fresh food from our adjustable gallon-size door bins quickly.

PowerBright™ LED Lighting
Find fresh foods quickly with PowerBright™ LED Lighting.

PrecisionPro Controls™
Adjust settings at the touch of a button.

Sabbath Mode (Star-K® Certified)

Available in:

Stainless (F)

Optional Trim Kits

Single 79" Louvered or 75" Collar Trim Kit (TRIMKITEZ1)
Optional trim kit that is designed to provide a built-in look for the All Refrigerator. Install with louver for 79" fit or easy-to-remove louver for a 75" fitted collar look.

Dual 79" Louvered or 75" Collar Trim Kit (TRIMKITEZ2)
Optional trim kit that is designed to provide a built-in look for the All Refrigerator and All Freezer when the units are installed next to each other. Install with louver for 79" fit or easy-to-remove louver for a 75" fitted collar look.

[1]Based on a six-hour closed door test of certain common odors in the fresh food compartment of a 21 Cu. Ft. refrigerator.

FRIGIDAIRE PROFESSIONAL

All Refrigerator

FPRU19F8RF **18.6 Cu. Ft.**

Features	
Door Design	Flat
Door Finish	Smudge-Proof™ Stainless Steel
Door Handle Design	Stainless Steel
Cabinet Finish	Grey
Door Hinge Covers	Hidden
Automatic Door Closer	Yes
Leveling System/Leveling Legs	Yes/4
Controls	
Controls	PrecisionPro™
Location of Controls	Inside Cabinet, on Top
Temperature Display C°/F°	Yes
Control Lock/Light	Yes/No
Temp Failure Alerts (Audible & Duration)	Yes
Door Ajar Alert (Audible)	Yes
Power Failure Alert (Duration)	Yes
Air Filter/Air Filter Change Indicator Light	PureAir Ultra®/Yes
Refrigerator Features	
Refrigerator Shelves	2 SpacePro™ Adjustable Glass
Full-Width Deli Drawer	1 SpacePro™
Full-Width Bottom Crisper	1 SpacePro™
Crisper Divider Quantity	2 (Per Crisper)
Full-Width Gallon Door Bin	2 Clear SpacePro™
Half-Width Liter Bin	4 Clear SpacePro™
Dairy Bin	1 Clear
Lighting	8-Point PowerBright™ LED
Optional Accessories	
Single Louvered Trim Kit	PN# TRIMKITEZ1
Dual Louvered Trim Kit	PN# TRIMKITEZ2
Certifications	
Sabbath Mode (Star-K® Certified)	Yes
Specifications	
Total Capacity (Cu. Ft.)	18.6
Shelf Area (Sq. Ft.)	20.6
Annual Energy (kWH)	331
Annual Energy Cost (.12/kWH)	$40
Power Supply Connection Location	Right Bottom Rear
Voltage Rating	115V/60Hz/20A
Connected Load (kW rating) @ 115 Volts[1]	0.55
Amps @ 115 Volts	15
Minimum Circuit Required (Amps)	20
Shipping Weight (Approx.)	245 Lbs.

[1]*An electrical supply with grounded three-prong receptacle is required. The power supply circuit must be installed in accordance with current edition of National Electrical Code (NFPA 70) and local codes & ordinances.*

Optional Trim Kits

Kits include top and side trim pieces, louvered grille, reversible kickplate and leveling system to fit 75" or 79" opening height.

Single 79" Louvered or 75" Collar Trim Kit
PN# TRIMKITEZ1

Dual 79" Louvered or 75" Collar Trim Kit
PN# TRIMKITEZ2
(Includes hardware to secure side-by-side units together.)

Note: Both kits attach directly to cabinetry through top trim piece or louvered grille to stabilize unit(s).

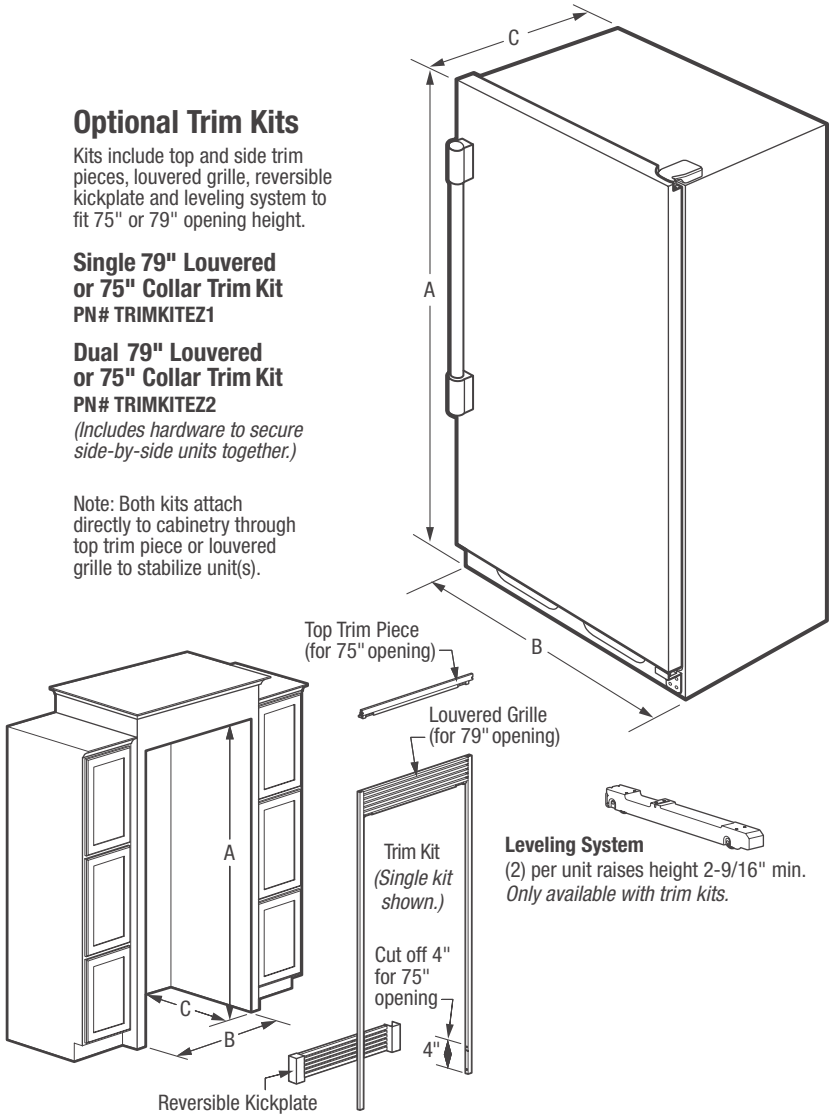

Leveling System
(2) per unit raises height 2-9/16" min.
Only available with trim kits.

NOTE: For planning purposes only. Always consult local and national electric and plumbing codes. Refer to Product Installation Guide for detailed installation instructions on the web at frigidaire.com.

C US

Overall Exterior Dimensions	
A - Height (Incl. Door)/(Cabinet Incl. Hinge)	71-3/8"/70-5/8"
B - Width	32"
C - Depth (Incl. Door)	26-1/2"
Depth with Door Open 90°	57-3/8"

Built-In Cutout Dimensions	
Single Unit without Trim Kit –	
A - Height	72"
B - Width	33"
C - Depth	25-1/4" min.[1]
Single Unit with Trim Kit & Leveling System –	
A - Height	75" or 79"
B - Width	33"
C - Depth	25-1/4" min.[1]

Built-In Cutout Dimensions	
Dual Unit[2] without Trim Kit –	
A - Height	72"
B - Width	66"
C - Depth	25-1/4" min.[1]
Dual Unit[2] with Trim Kit & Leveling System –	
A - Height	75" or 79"
B - Width	66"
C - Depth	25-1/4" min.[1]

[1]*Minimum depth from face of cabinet side panels and requires recessed electrical outlet.*
[2]*Side-by-Side*

Accessories information available on the web at ***frigidaire.com***

FRIGIDAIRE
USA • 10200 David Taylor Drive • Charlotte, NC 28262 • 1-800-FRIGIDAIRE • **frigidaire.com**
CANADA • 5855 Terry Fox Way • Mississauga, ON L5V 3E4 • 1-800-265-8352 • **frigidaire.ca**

Specifications subject to change.

© 2015 Electrolux Home Products, Inc.

FRIGIDAIRE PROFESSIONAL

All Refrigerator

FPRU19F8RF **18.6 Cu. Ft.**

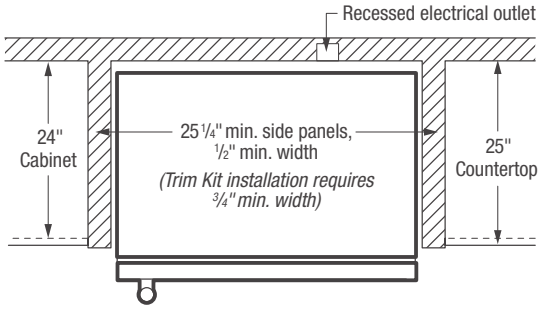

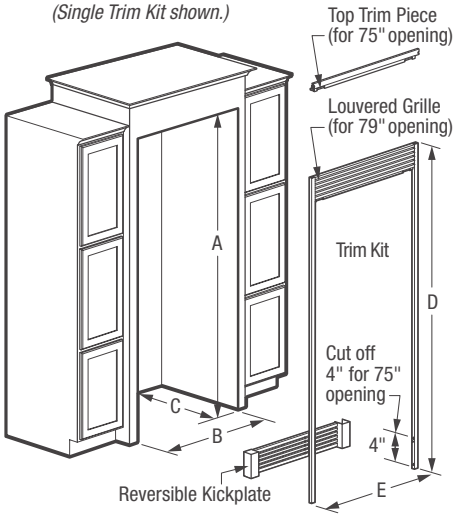

Optional Trim Kits & Dimensions

Kits include top and side trim pieces, louvered grille, reversible kickplate and leveling system to fit 75" or 79" opening height.

Single Louvered Trim Kit

PN# TRIMKITEZ1

(D) 75⅛" or 79⅛" (E) 34¾"

Double Louvered Trim Kit

PN# TRIMKITEZ2

(Includes hardware to secure side-by-side units together.)

(D) 75⅛" or 79⅛" (E) 67⅛"

Note: Both kits attach directly to cabinetry through top trim piece or louvered grille to stabilize unit(s). Refer to detailed kit installation instructions packed with kit or on web.

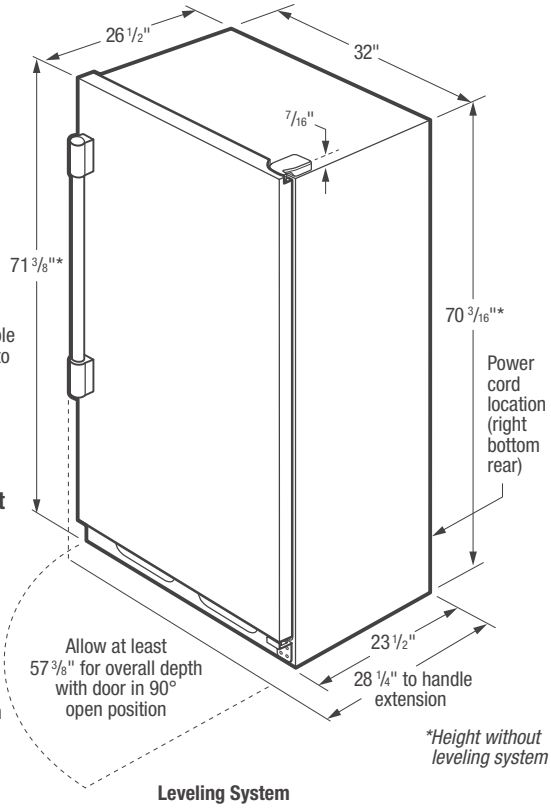

All-Refrigerator Cutout Dimensions

Built-In Installation *(without Trim Kit)*

Single Unit
(A) 72" (B) 33" (C) 25¼" min.†

Double Unit (Side-by-Side)
(A) 72" (B) 66" (C) 25¼" min.†

Built-In Installation *(with Trim Kit & Leveling System)*

Single Unit
(A) 75" or 79" (B) 33" (C) 25¼" min.†

Double Unit (Side-by-Side)
(A) 75" or 79" (B) 66" (C) 25¼" min.†

Leveling System

(2) per unit raises height 2-9/16" min.
Only available with trim kits.



†*Minimum depth from face of cabinet side panels and requires recessed electrical outlet.*

Built-In All-Refrigerator Specifications

- Product Shipping Weight – 245 Lbs.
- An electrical supply with grounded three-prong receptacle is required. The power supply circuit must be installed in accordance with current edition of *National Electrical Code (NFPA 70)* and local codes & ordinances.
- Voltage Rating – 115V / 60 Hz / 20 Amps
- Connected Load (kW Rating) @ 115 Volts = 0.55 kW
- Amps @ 115 Volts = 15 Amps
- Always consult local and national electric codes.
- Minimum 25-1/4" depth requires recessed electrical outlet.
- To allow for ease of installation, tape excess power cord to back of unit.
- When installing refrigerator adjacent to wall, cabinet or other appliance that extends beyond front edge of unit, 20" minimum clearance recommended to allow for optimum 140° door swing, providing complete drawer / crisper access and removal. *(Absolute 4" minimum clearance will ONLY allow for 90° door swing which will provide limited drawer / crisper access with restricted removal.)*
- Minimum 3/8" clearance required for sides and top of refrigerator or freezer with 1" clearance at rear to allow for ease of installation, proper air circulation, and plumbing / electrical connections.
- To ensure optimum performance, *(do not install in areas where temperature drops below 55°F or rises above 110°F)* and avoid installing in direct sunlight or close proximity to range, dishwasher or other heat source.
- Refrigerator must be placed on level surface of hard material, same height as flooring. Surface must support approximately 800 lbs. when fully loaded. Unit equipped with 4-point leveling.

"Built-In Look" Specifications

- Minimum opening of 72" H x 33" W x 25-1/4" D required for single-unit "Built-In Look" installation; 66" W required for double-unit installation. (72" H to be measured from finished floor to underside of soffit or overhead cabinet.)
- Remove all wall / floor molding prior to built-in installation.

Optional Trim Kit Specifications

- If optional Single or Double Louvered Trim Kit is to be used, different cutout dimensions are required. Kit can be adapted to fit either 75" or 79" opening height. *(Refer to cutout dimensions on this page and detailed Louvered Trim Kit installation instructions included with kit or on web.)*
- Remove all wall / floor molding prior to built-in installation.

Note: For planning purposes only. Refer to Product Installation Guide on the web at frigidaire.com for detailed instructions.

Optional Accessories

- Single Louvered Trim Kit – (PN # TRIMKITEZ1).
- Double Louvered Trim Kit – (PN # TRIMKITEZ2).
- PureAdvantage® Air Filter Replacement Cartridge – (PN # 241754001).

FRIGIDAIRE
USA • 10200 David Taylor Drive • Charlotte, NC 28262 • 1-800-FRIGIDAIRE • **frigidaire.com**
CANADA • 5855 Terry Fox Way • Mississauga, ON L5V 3E4 • 1-800-265-8352 • **frigidaire.ca**

Specifications subject to change.

FPRU19F8R 07/15

© 2015 Electrolux Home Products, Inc.

FRIGIDAIRE PROFESSIONAL

All Freezer

FPFU19F8RF

3269f
FREEZER, ALL: SINGLE DOOR
PHOTO REFLECTS COMPANION REFRIGERATOR W OPTIONAL TRIM KIT

18.6 Cu. Ft.



Shown with companion, All-Refrigerator model FPRU19F8RF and optional coordinated Dual 75" Louvered Trim Kit (TRIMKITEZ2).

Signature Features



PureAir Ultra® Filtration System
Fresh air offers great taste. PureAir Ultra® Filtration removes up to 7 times more odor than baking soda to keep ingredients tasting fresh by removing odor particles with fast-acting, highly absorbent carbon technology.[1]



SpacePro™ Shelving System
Always have ingredients on-hand and accessible with organizational solutions designed for space optimization like SpacePro™ Door Bins, SpacePro™ Shelving and SpacePro™ Storage Baskets.



Smudge-Proof™
Resists fingerprints and cleans easily.

Product Dimensions

Height (Cabinet Incl. Hinge)	70-5/8"
Width	32"
Depth (Including Door)	26-1/2"

More Easy-To-Use Features

Automatic Alerts
Alerts you if the door is left open, if the temperature rises or if the power goes out so your food stays at its optimal temperature.

Soft Freeze™ Zone
Keep frozen foods soft and easy to eat with the Soft Freeze™ Zone. Great for foods like ice cream, sticks of margarine and bread.

PowerBright™ LED Lighting
Find frozen foods quickly with PowerBright™ LED Lighting.

SpacePro™ Shelving
Optimize your freezer space with adjustable shelving.

SpacePro™ Door Bins
Adjustable door bins for quick access to frozen foods.

SpacePro™ Storage Baskets
Two full-width adjustable storage baskets keep things organized, and accessible.

PowerPlus® Ice Maker
Unlimited access to ice.

PrecisionPro Controls™
Adjust settings at the touch of a button.

Sabbath Mode (Star-K® Certified)

Available in:

Stainless (F)

Optional Trim Kits

Single 79" Louvered or 75" Collar Trim Kit (TRIMKITEZ1)
Optional trim kit that is designed to provide a built-in look for the All Freezer. Install with louver for 79" fit or easy-to-remove louver for a 75" fitted collar look.

Dual 79" Louvered or 75" Collar Trim Kit (TRIMKITEZ2)
Optional trim kit that is designed to provide a built-in look for the All Refrigerator and All Freezer when the units are installed next to each other. Install with louver for 79" fit or easy-to-remove louver for a 75" fitted collar look.

[1]Based on a six-hour closed door test of certain common odors in the fresh food compartment of a 21 Cu. Ft. refrigerator.

FRIGIDAIRE PROFESSIONAL

All Freezer

FPFU19F8RF **18.6 Cu. Ft.**

Features	
Door Design	Flat
Door Finish	Smudge-Proof™ Stainless Steel
Door Handle Design	Stainless Steel
Cabinet Finish	Grey
Door Hinge Covers	Hidden
Automatic Door Closer	Yes
Leveling System / Leveling Legs	Yes / 4
Controls	
Controls	PrecisionPro™
Location of Controls	Inside Cabinet, on Top
Temperature Display C° / F°	Yes
Control Lock / Light	No / Yes
Temp Failure Alerts (Audible & Duration)	Yes
Door Ajar Alert (Audible)	Yes
Power Failure Alert (Duration)	Yes
Air Filter / Air Filter Change Indicator Light	PureAir Ultra® / Yes
Freezer Features	
Freezer Shelves	2 SpacePro™ Adjustable Glass
PowerPlus® Ice Maker	Yes
Ice Bin	Yes
Full-Width Mid-Level Basket	1 Plastic SpacePro™
Full-Width Bottom Basket	1 Plastic SpacePro™
Full-Width Gallon Door Bin	1 Clear SpacePro™
Half-Width Liter Bin	5 Clear SpacePro™
Soft Freeze™ Zone	Yes
Lighting	8-Point PowerBright™ LED
Optional Accessories	
Single Louvered Trim Kit	PN # TRIMKITEZ1
Dual Louvered Trim Kit	PN # TRIMKITEZ2
Certifications	
Sabbath Mode (Star-K® Certified)	Yes
Specifications	
Total Capacity (Cu. Ft.)	18.6
Shelf Area (Sq. Ft.)	20.9
Annual Energy (kWH)	593
Annual Energy Cost (.12 / kWH)	$71
Power Supply Connection Location	Right Bottom Rear
Water Inlet Location	Left Bottom Rear
Voltage Rating	115V / 60Hz / 20A
Connected Load (kW rating) @ 115 Volts[1]	0.55
Amps @ 115 Volts	15
Minimum Circuit Required (Amps)	20
Shipping Weight (Approx.)	245 Lbs.

[1]An electrical supply with grounded three-prong receptacle is required. The power supply circuit must be installed in accordance with current edition of National Electrical Code (NFPA 70) and local codes & ordinances.

Optional Trim Kits

Kits include top and side trim pieces, louvered grille, reversible kickplate and leveling system to fit 75" or 79" opening height.

Single 79" Louvered or 75" Collar Trim Kit
PN# TRIMKITEZ1

Dual 79" Louvered or 75" Collar Trim Kit
PN# TRIMKITEZ2
(Includes hardware to secure side-by-side units together.)

Note: Both kits attach directly to cabinetry through top trim piece or louvered grille to stabilize unit(s).

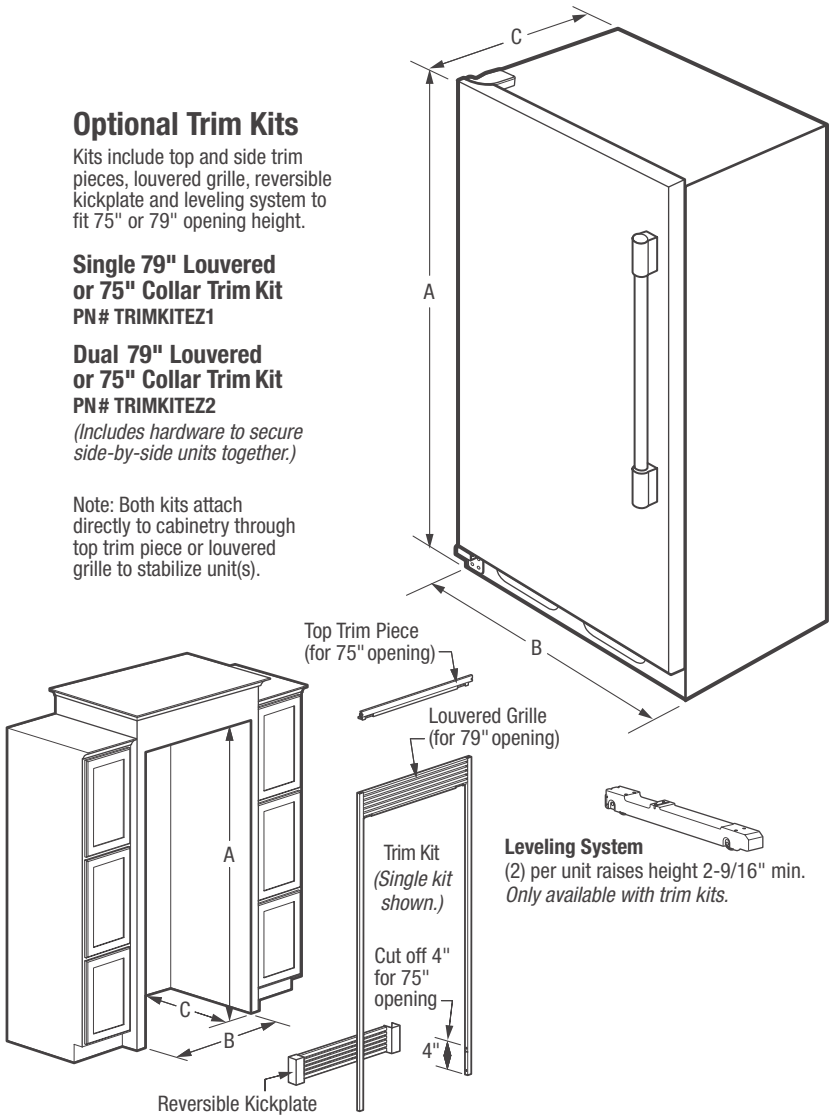

Leveling System
(2) per unit raises height 2-9/16" min.
Only available with trim kits.

NOTE: For planning purposes only. Always consult local and national electric and plumbing codes. Refer to Product Installation Guide for detailed installation instructions on the web at frigidaire.com.

C US

Overall Exterior Dimensions	
A - Height (Incl. Door)/(Cabinet Incl. Hinge)	71-3/8" / 70-5/8"
B - Width	32"
C - Depth (Incl. Door)	26-1/2"
Depth with Door Open 90°	57-3/8"

Built-In Cutout Dimensions	
Single Unit without Trim Kit –	
A - Height	72"
B - Width	33"
C - Depth	25-1/4" min.[1]
Single Unit with Trim Kit & Leveling System –	
A - Height	75" or 79"
B - Width	33"
C - Depth	25-1/4" min.[1]

Built-In Cutout Dimensions	
Dual Unit[2] without Trim Kit –	
A - Height	72"
B - Width	66"
C - Depth	25-1/4" min.[1]
Dual Unit[2] with Trim Kit & Leveling System –	
A - Height	75" or 79"
B - Width	66"
C - Depth	25-1/4" min.[1]

[1]Minimum depth from face of cabinet side panels and requires recessed electrical outlet.
[2]Side-by-Side

*Accessories information available on the web at **frigidaire.com***

FRIGIDAIRE
USA • 10200 David Taylor Drive • Charlotte, NC 28262 • 1-800-FRIGIDAIRE • **frigidaire.com**
CANADA • 5855 Terry Fox Way • Mississauga, ON L5V 3E4 • 1-800-265-8352 • **frigidaire.ca**

Specifications subject to change.

© 2015 Electrolux Home Products, Inc.

FRIGIDAIRE
PROFESSIONAL.

All Freezer

FPFU19F8RF **18.6 Cu. Ft.**

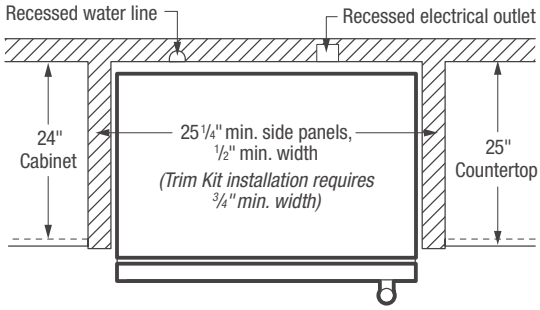

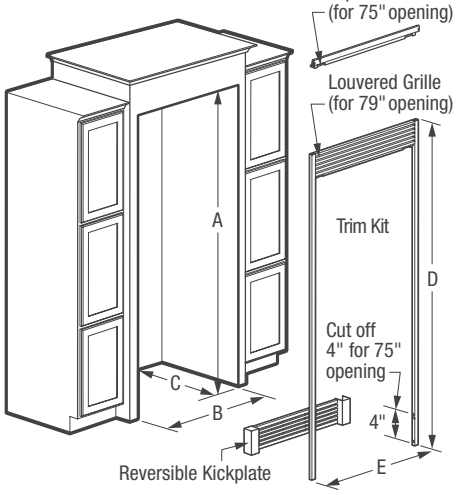

Optional Trim Kits & Dimensions

Kits include top and side trim pieces, louvered grille, reversible kickplate and leveling system to fit 75" or 79" opening height.

Single Louvered Trim Kit
PN# TRIMKITEZ1

(D) 75⅛" or 79⅛" (E) 34¾"

Double Louvered Trim Kit
PN# TRIMKITEZ2

(Includes hardware to secure side-by-side units together.)

(D) 75⅛" or 79⅛" (E) 67⅛"

Note: Both kits attach directly to cabinetry through top trim piece or louvered grille to stabilize unit(s). Refer to detailed kit installation instructions packed with kit or on web.

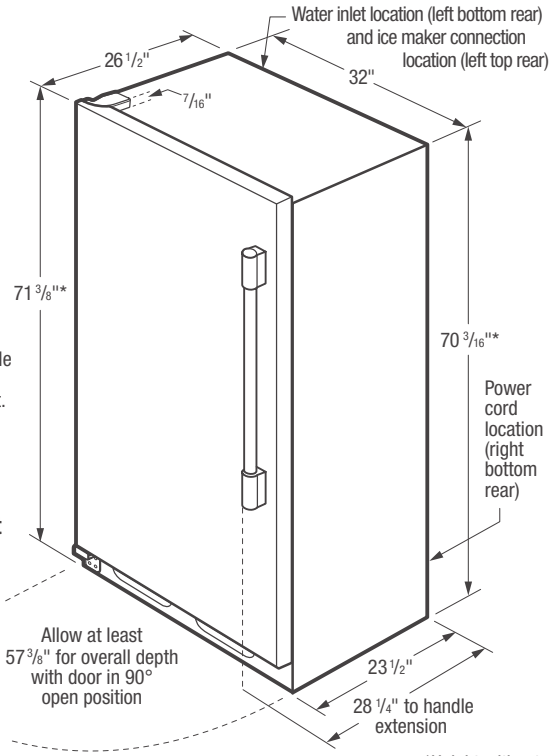

**Height without leveling system*

All-Freezer Cutout Dimensions

Built-In Installation *(without Trim Kit)*

Single Unit
(A) 72" (B) 33" (C) 25¼" min.†

Double Unit (Side-by-Side)
(A) 72" (B) 66" (C) 25¼" min.†

Built-In Installation *(with Trim Kit & Leveling System)*

Single Unit
(A) 75" or 79" (B) 33" (C) 25¼" min.†

Double Unit (Side-by-Side)
(A) 75" or 79" (B) 66" (C) 25¼" min.†

Leveling System

(2) per unit raises height 2-9/16" min.
Only available with trim kits.



†*Minimum depth from face of cabinet side panels and requires recessed electrical outlet.*

Built-In All-Freezer Specifications

- Product Shipping Weight – 245 Lbs.
- An electrical supply with grounded three-prong receptacle is required. The power supply circuit must be installed in accordance with current edition of National Electrical Code *(NFPA 70)* and local codes & ordinances.
- Voltage Rating – 115V/60 Hz/20 Amps
- Connected Load (kW Rating) @ 115 Volts = 0.55 kW
- Amps @ 115 Volts = 15 Amps
- Always consult local and national electric & plumbing codes.
- Water line for ice maker can enter opening through floor or rear wall Copper tubing recommended between cold water line and water connection location. Water line tubing recommended is 48" minimum length by 1/4" diameter. Installation of easily accessible shutoff valve in water line required.
- Minimum 25-1/4" depth requires recessed electrical outlet and copper water line.
- To allow for ease of installation, tape excess power cord to back of unit.
- To allow for ease of moving out side-by-side units after installation, 84" minimum length of coiled copper tubing recommended.
- When installing freezer adjacent to wall, cabinet or other appliance that extends beyond front edge of unit, 20" minimum clearance recommended to allow for optimum 140° door swing, providing complete drawer / crisper access and removal. *(Absolute 4" minimum clearance will ONLY allow for 90° door swing which will provide limited drawer / crisper access with restricted removal.)*
- Minimum 3/8" clearance required for sides and top of refrigerator or freezer with 1" clearance at rear to allow for ease of installation, proper air circulation, and plumbing/electrical connections.
- To ensure optimum performance, *(do not install in areas where temperature drops below 55°F or rises above 110°F)* and avoid installing in direct sunlight or close proximity to range, dishwasher or other heat source.
- Freezer must be placed on level surface of hard material, same height as flooring. Surface must support approximately 800 lbs. when fully loaded. Unit equipped with 4-point leveling.

"Built-In Look" Specifications

- Minimum opening of 72" H x 33" W x 25-1/4" D required for single-unit "Built-In Look" installation; 66" W required for double-unit installation. (72" H to be measured from finished floor to underside of soffit or overhead cabinet.)
- Remove all wall / floor molding prior to built-in installation.

Optional Trim Kit Specifications

- If optional Single or Double Louvered Trim Kit is to be used, different cutout dimensions are required. Kit can be adapted to fit either 75" or 79" opening height. *(Refer to cutout dimensions on this page and detailed Louvered Trim Kit installation instructions included with kit or on web.)*
- Remove all wall / floor molding prior to built-in installation.

Note: For planning purposes only. Refer to Product Installation Guide on the web at frigidaire.com for detailed instructions.

Optional Accessories

- Single Louvered Trim Kit – (PN # TRIMKITEZ1).
- Double Louvered Trim Kit – (PN # TRIMKITEZ2).
- PureAdvantage® Air Filter Replacement Cartridge – (PN # 241754001).

FRIGIDAIRE
USA • 10200 David Taylor Drive • Charlotte, NC 28262 • 1-800-FRIGIDAIRE • **frigidaire.com**
CANADA • 5855 Terry Fox Way • Mississauga, ON L5V 3E4 • 1-800-265-8352 • **frigidaire.ca**

Specifications subject to change.

FPFU19F8R 07/15

© 2015 Electrolux Home Products, Inc.

GZS22DSJ/DMJ

GE® 21.9 Cu. Ft. Counter-Depth Side-By-Side Refrigerator

DIMENSIONS AND INSTALLATION INFORMATION (IN INCHES)

OVERALL DIMENSIONS	Height to top of hinge (in.) **A**	**69-1/4**
	Height to top of case (in.) **B**	**68-3/4**
	Case depth without door (in.) **C**	**23-7/8**
	Case depth less door handle (in.) **D**	**27**
	Case depth with door handle (in.) **E**	**29-1/2**
	Depth with fresh food door open 90˚ (in.) **F**	**46**
	Width (in.) **G**	**35-3/4**
	Width with door open 90˚ with door handle (in.) **H**	**41-3/8**
AIR CLEARANCES	Each side (in.)	**1/8**
	Top (in.)	**1**
	Back (in.)	**2**

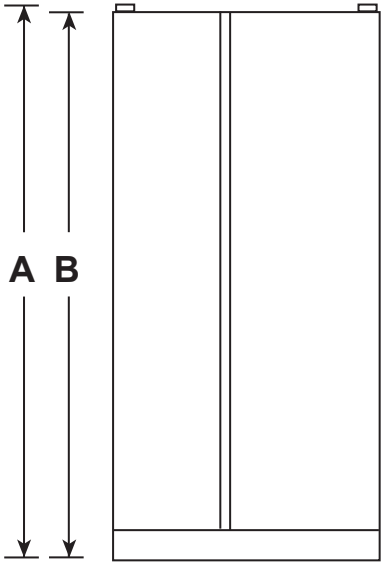

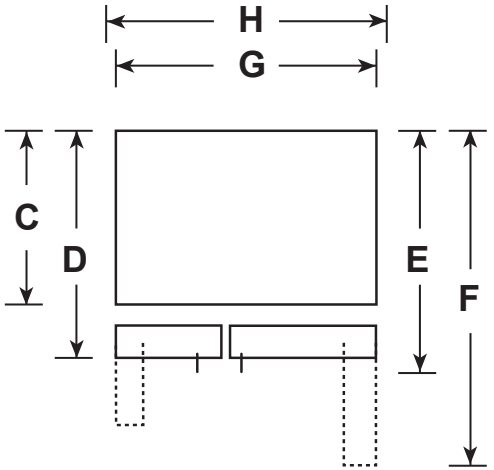

†Water hook-up fits in back air clearance when calculating installation depth.

If installed against a wall, allow clearance of 10-3/4" on freezer side to remove bin.

Clearance required to remove fresh food full-size pan without disassembling is 15".

Allow additional space for any necessary leveling adjustments.



GE APPLIANCES

For answers to your Monogram, GE Café™ Series, GE I
GE Appliances product questions, visit our website at
or call GE Answer Center® Service, 800.626.2000.

TOTAL VOLUME AND SHELF AREA ARE CALCULATED BY THE ASSOCIATION OF HOME APPLIANCE MANUFACTURERS' STANDARDS.

Specification Revised 8/17

GZS22DSJ/DMJ

GE® 21.9 Cu. Ft. Counter-Depth Side-By-Side Refrigerator

FEATURES AND BENEFITS

Counter-depth design – Offers a built-in look by fitting nearly flush with surrounding cabinetry

LED Lighting – Find all your favorite foods under natural-look light

Integrated shelf support system – Provides strong, flexible support

Adjustable slide-out, spillproof glass shelves – Raised edges help contain spills and make cleanup quick and easy

Adjustable clear door bins – Offer ideal space for large containers in the door and free up valuable shelf space

Fresh food multi-level drawers – Provide the ideal environment for storing your fruits and vegetables

Glass freezer shelves – Enjoy a high-end appearance with secure storage for a variety of items

Advanced water filtration uses MWF replacement filter – Reduces trace pharmaceuticals from water and ice* (* Removes 98% of ibuprofen, atenolol, fluoxetine, progesterone and trimethoprim. These pharmaceuticals are not necessarily in all users' water)

Model GZS22DSJSS – Stainless steel

Model GZS22DMJES – Slate

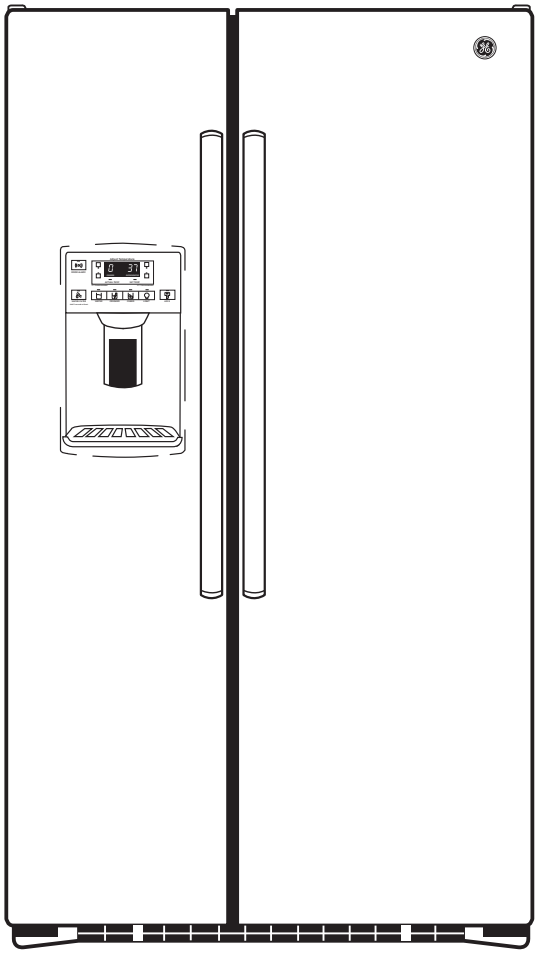

UFAS COMPLIANT

GE APPLIANCES

NOTE: 2" MIN. AIR SPACE REQUIRED BETWEEN WALK-IN BOX AND EXISTING BUILDING WALLS

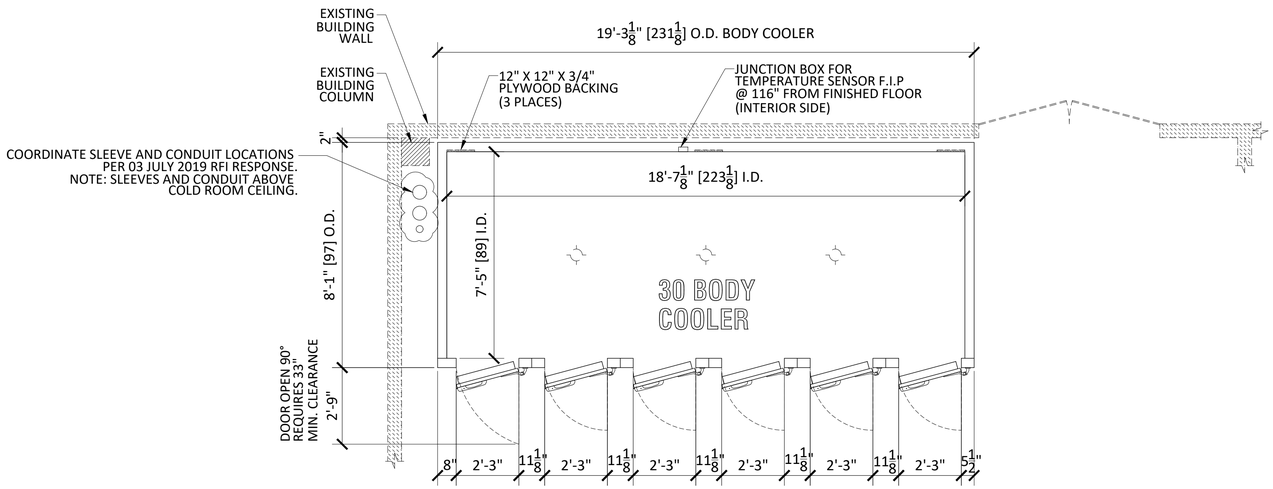

PLAN VIEW

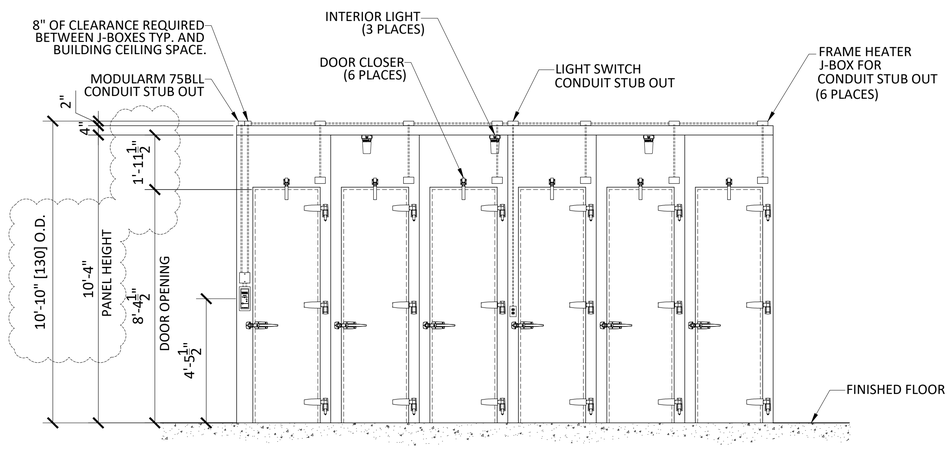

FRONT ELEVATION

SPECIFICATIONS

CONSTRUCTION:
WALLS: 4" THICK, DOW RF400, HIGH DENSITY FOAM RAILS
BASF, AUTOFROTH 100-B-1103 RESIN/9300A ISOCYANATE, HIGH DENSITY FOAM
CEILING: 4" THICK, DOW RF400, HIGH DENSITY FOAM RAILS
BASF, AUTOFROTH 100-B-1103 RESIN/9300A ISOCYANATE, HIGH DENSITY FOAM

FINISH:
WALLS: 26GA STUCCO EMBOSSED GALVANIZED STEEL INTERIOR
26GA STUCCO EMBOSSED GALVANIZED STEEL EXTERIOR
CEILING: 26GA STUCCO EMBOSSED GALVANIZED STEEL INTERIOR
26GA STUCCO EMBOSSED GALVANIZED STEEL EXTERIOR

DOOR: (6) 27" X 100 1/2" OVERLAP, INFIT, COOLER DOOR W/ FRAME HEATER (3-SIDED)
(6) LATCH W/ KEY LOCK & INSIDE RELEASE (PUSH ROD)
(18) HINGES, (6) CAM-RISE, (12) CAM-RISE W/ SPRING ASSIST
(6) DOOR CLOSER

ACCESSORIES: (3) VAPOR PROOF LIGHT FIXTURE
(1) LIGHT SWITCH W/ PILOT LIGHT & STAINLESS STEEL COVER PLATE
(1) MODULARM 75BLL
6" EXTERIOR COVE BASE
SILICONE, CAULKING, SCREWS AND TRIM

REFRIGERATION: REFER TO SHEET 3 OF 6 FOR REFRIGERATION INFORMATION

NOTES: CAM LOCK CEILING

FEDERAL LAW MINIMUM R VALUE REQUIREMENTS

	MIN. R VALUE FOR COMMERCIAL SECTIONS				MEAN TEMP (°F)	FEDERAL LAW MIN. R=
	3.5"	4"	5"	5.5"		
COOLER	26.6	30.4	38	41.8	55	R=25
FREEZER		34.0	42.5	46.7	20	R=32
FLOOR	29.7	34.0	42.5	46.7	20	R=28

SEC. 340 OF THE ENERGY POLICY AND CONSERVATION ACT (42 U.S.C. 6311)
ASTM METHOD C-518

CUSTOMER: OKLAHOMA STATE UNIVERSITY
PROJECT: TULSA - OK
APPROVAL:
SIGNATURE: DATE:

TOLERANCE BLOCK:
DIMENSIONS ARE IN INCHES
DO NOT SCALE DRAWING
MATERIAL: SEE FINISHES
FINISH: -

REVISIONS

REV.	DCN#	DESCRIPTION	DATE	CHANGED/APPROVED
X02	-	REVISED HEIGHT FROM 11'-2" O.D. TO 10'-10"	08/19/2019	RT
X01	-	PRELIMINARY RELEASE	XX/XX/XX	XX/

PROPRIETARY
THIS DOCUMENT AND THE DATE DISCLOSED HEREIN AND HEREWITH IS NOT TO BE REPRODUCED, USED, OR OTHERWISE DISCLOSED IN WHOLE OR IN PART TO ANYONE WITHOUT WRITTEN AUTHORIZATION FROM MORTECH MFG.

APPROVALS	DATE
DRAWN BY ROBERT	03/21/2019
CHECKED BY VICTOR	03/21/2019
APPROVED BY APPROVED BY	XX/XX/XX

MORTECH MANUFACTURING CO., INC.™
ISO 9001:2015 CERTIFIED COMPANY
411 North Aerojet Avenue
Azusa, CA 91702
TEL: (800) 410-0100 (626) 334-1471
FAX: (626) 334-1704
www.mortechmfg.com

TITLE: PLAN VIEW, ELEVATION VIEW & SPECIFICATIONS

SIZE: D | DWG NO.: WIC- 8446 | REV.: XO2
SCALE: 3/8" = 1'-0" | NEXT ASSY.: | SHEET: 1 OF 6

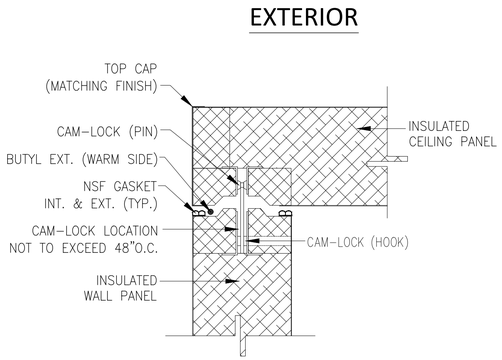

1 CEILING TO WALL CONNECTION

(CAM-LOCK CEILING TO WALLS)

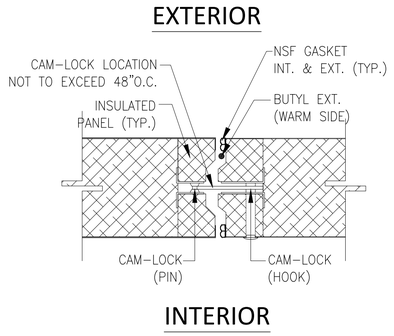

2 PANEL TO PANEL CONNECTION

(CAM-LOCK PANEL TO PANEL)

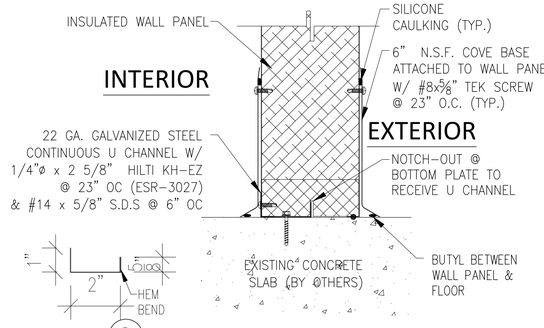

3 WALL TO CONCRETE SLAB

NOTE:
ANCHORS, AND TEK SCREWS PROVIDED BY INSTALLER

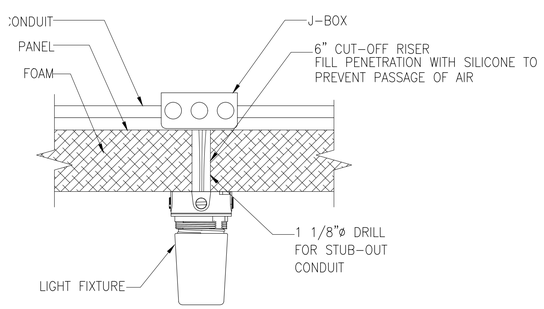

4 VAPOR PROOF LIGHT FIXTURE

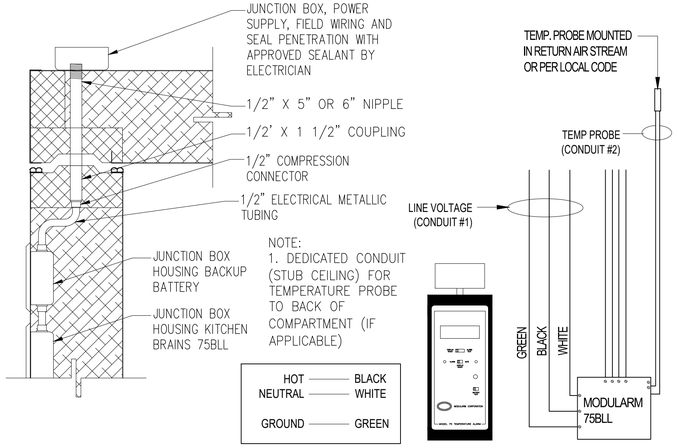

5 MODULARM 75BLL TEMPERATURE ALARM

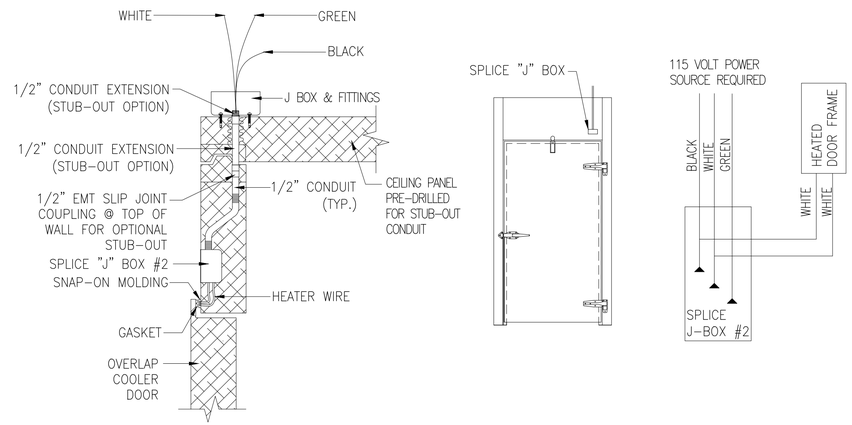

6 DOOR FRAME HEATER

REVISIONS				
REV.	DCN#	DESCRIPTION	DATE	CHANGED/APPROVED
X02	-	REVISED HEIGHT FROM 11'-2" O.D. TO 10'-10"	08/19/2019	RT
X01	-	PRELIMINARY RELEASE	XX/XX/XX	XX/

CUSTOMER: OKLAHOMA STATE UNIVERSITY

PROJECT: TULSA - OK

APPROVAL:

SIGNATURE: DATE:

TOLERANCE BLOCK:
DIMENSIONS ARE IN INCHES

DO NOT SCALE DRAWING

MATERIAL: SEE FINISHES

FINISH: -

PROPRIETARY
THIS DOCUMENT AND THE DATE DISCLOSED HEREIN AND HEREWITH IS NOT TO BE REPRODUCED, USED, OR OTHERWISE DISCLOSED IN WHOLE OR IN PART TO ANYONE WITHOUT WRITTEN AUTHORIZATION FROM MORTECH MFG.

APPROVALS	DATE
DRAWN BY: ROBERT	03/21/2019
CHECKED BY: VICTOR	03/21/2019
APPROVED BY: APPROVED BY	XX/XX/XX

MORTECH MANUFACTURING CO., INC.
ISO 9001:2015 CERTIFIED COMPANY
411 North Aerojet Avenue
Azusa, CA 91702
TEL: (800) 410-0100 (626) 334-1471
FAX: (626) 334-1704
www.mortechmfg.com

TITLE: DETAILS

SIZE: D | DWG NO.: WIC- 8446 | REV.: XO2

SCALE: N.T.S. | NEXT ASSY. | SHEET: 2 OF 6

DISCUSS, SCROLL AND SEMI-HERMETIC, AND HERMETIC CONDENSING UNITS																													
DESCRIPTION CONDENSING	QTY.	MFG.	MODEL NO.	SUCTION TEMP.	AMBIENT TEMP.	CAPACITY	CONNECTIONS (ID)		RECEIVER	DIMENSIONS (IN.)			NET WT. Lbs.	SOUND DATA dba	VOLTAGE			FANS			COMPRESSOR		CIRCUIT TOTAL				REFRIGERANT TYPE	HG CAPACITY CONTROL
							LIQUID	SUCTION	LBS.	L	W	H			VOLTS	PH	HZ	QTY.	POWER	FLA/FAN	RLA	LRA	TOTAL AMPS	WATTS	MCA	MOPD		
SYS 1	1	HEATCRAFT	LARKIN LHT025X6B	25°F	95°F	17,490	5/8	7/8	9	28.25	37.75	17.25	244	8.18	208-230	1	60	2	1/15	1	11.2	61	–	–	15	25	R404A/R507	NONE
DISCUSS, SCROLL AND SEMI-HERMETIC, AND HERMETIC CONDENSING UNITS																													
DESCRIPTION CONDENSING	QTY.	MFG.	MODEL NO.	SUCTION TEMP.	AMBIENT TEMP.	CAPACITY	CONNECTIONS (ID)		RECEIVER	DIMENSIONS (IN.)			NET WT. Lbs.	SOUND DATA dba	VOLTAGE			FANS			COMPRESSOR		CIRCUIT TOTAL				REFRIGERANT TYPE	HG CAPACITY CONTROL
							LIQUID	SUCTION	LBS.	L	W	H			VOLTS	PH	HZ	QTY.	POWER	FLA/FAN	RLA	LRA	TOTAL AMPS	WATTS	MCA	MOPD		
SYS 2	1	HEATCRAFT	LARKIN LHT025X6B	25°F	95°F	17,490	5/8	7/8	9	28.25	37.75	17.25	244	8.18	208-230	1	60	1	1/15	1	11.2	61	–	–	15	25	R404A/R507	NONE

LOW PROFILE EVAPORATOR																												
DESCRIPTION	QTY.	MFG.	MODEL NO.	AIR FLOW	EVAP. TEMP.	BOX TEMP.	CAPACITY	FAN(S)		VOLTAGE			DEFROST HEATERS			CIRCUIT TOTAL				CONNECTIONS (INCHES)			REFRIGERANT TYPE	NET WT. Lbs.	DIMENSIONS (IN.)		
								QTY.	FLA	VOLTS	PH	HZ	TYPE	QTY.	AMPS	TOTAL AMPS	WATTS	MCA	MOP	INLET OD	SUCTION ID	DRAIN			L	W	H
EVAPORATOR SYS 1	1	HEATCRAFT	LARKIN LCA6185AB	2,800	25°F	–	18,500	4	3.6	115	1	60	AIR	–	–	–	–	15	15	1/2	1 1/8	3/4	R404A	82	77.50	14.875	15.00
LOW PROFILE EVAPORATOR																												
DESCRIPTION	QTY.	MFG.	MODEL NO.	AIR FLOW	EVAP. TEMP.	BOX TEMP.	CAPACITY	FAN(S)		VOLTAGE			DEFROST HEATERS			CIRCUIT TOTAL				CONNECTIONS (INCHES)			REFRIGERANT TYPE	NET WT. Lbs.	DIMENSIONS (IN.)		
								QTY.	FLA	VOLTS	PH	HZ	TYPE	QTY.	AMPS	TOTAL AMPS	WATTS	MCA	MOP	INLET OD	SUCTION ID	DRAIN			L	W	H
EVAPORATOR SYS 2	1	HEATCRAFT	LARKIN LCA6185AB	2,800	25°F	–	18,500	4	3.6	115	1	60	AIR	–	–	–	–	15	15	1/2	1 1/8	3/4	R404A	82	77.50	14.875	15.00

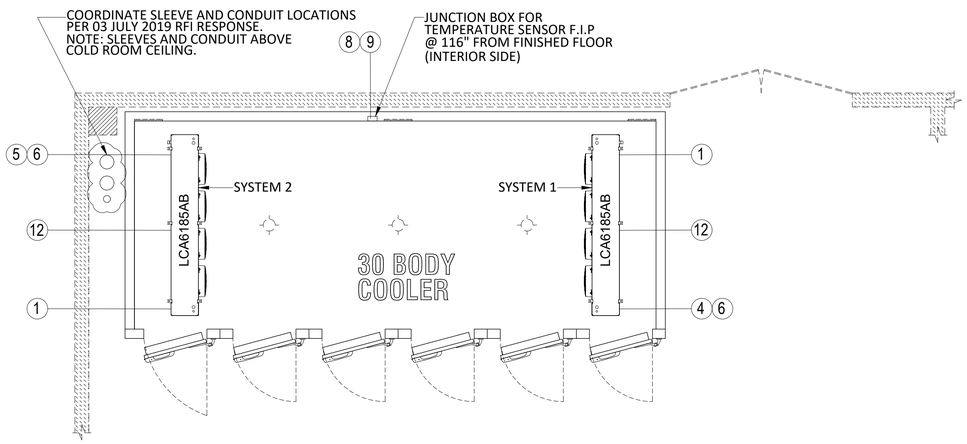

PLAN VIEW

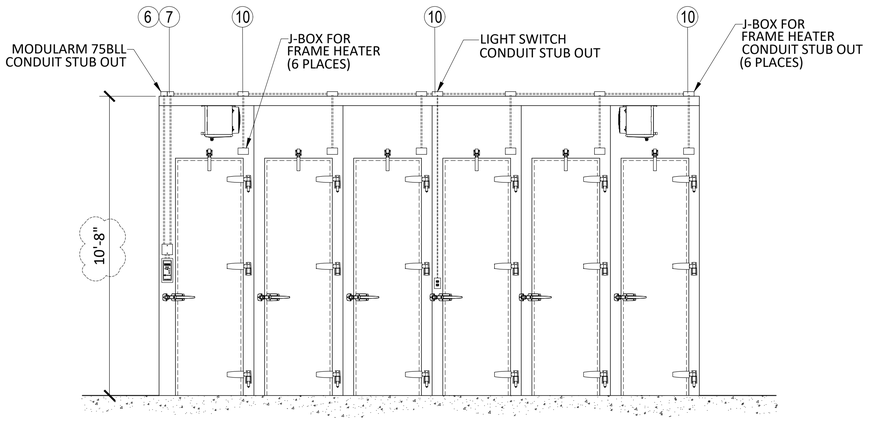

FRONT ELEVATION

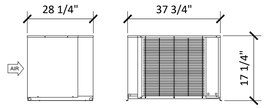

COOLER CONDENSING UNIT DETAIL
MODEL NO. LHT025X6B
SCALE: NTS

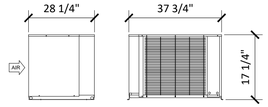

COOLER CONDENSING UNIT DETAIL
MODEL NO. LHT025X6B
SCALE: NTS

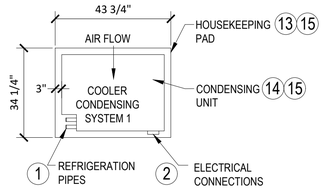

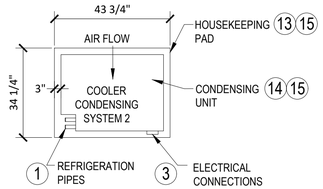

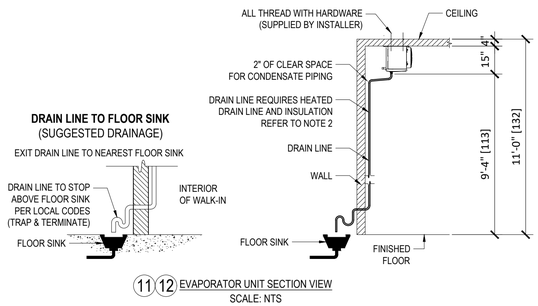

11 12 EVAPORATOR UNIT SECTION VIEW
SCALE: NTS

NOTE: LOCATION OF EQUIPMENT TO BE FIELD COORDINATED.

LEGEND
(X) = KEY NOTE NUMBER

1. MORTECH INSTALLER TO FURNISH AND INSTALL REFRIGERATION PIPE RUN OF 50' FROM CONDENSING UNIT TO EVAPORATOR COIL.
2. ELECTRICAL CONTRACTOR TO FURNISH AND INSTALL SOURCE OF BUILDING POWER (208-230V/1PH/25A CIRCUIT) WITH FUSED DISCONNECT AT SYSTEM 1 CONDENSING UNIT. (REFER TO REFRIGERATION INFORMATION FOR ELECTRICAL REQUIREMENTS)
3. ELECTRICAL CONTRACTOR TO FURNISH AND INSTALL SOURCE OF BUILDING POWER (208-230V/1PH/25A CIRCUIT) WITH FUSED DISCONNECT AT SYSTEM 2 CONDENSING UNIT. (REFER TO REFRIGERATION INFORMATION FOR ELECTRICAL REQUIREMENTS)
4. ELECTRICAL CONTRACTOR TO FURNISH AND INSTALL SOURCE OF BUILDING POWER (110-120V/1PH/15A CIRCUIT) WITH DISCONNECT AT SYSTEM 1 EVAPORATOR COIL. (REFER TO REFRIGERATION INFORMATION FOR ELECTRICAL REQUIREMENTS)
5. ELECTRICAL CONTRACTOR TO FURNISH AND INSTALL SOURCE OF BUILDING POWER (110-120V/1PH/15A CIRCUIT) WITH DISCONNECT AT SYSTEM 2 EVAPORATOR COIL. (REFER TO REFRIGERATION INFORMATION FOR ELECTRICAL REQUIREMENTS)
6. ELECTRICAL CIRCUITS TO EVAPORATOR COIL(S) AND ALARM LEAD-LAG PANEL MUST BE SUPPLIED FROM THE SAME ELECTRICAL BUILDING PANEL IN ORDER TO SHARE NEUTRAL CIRCUIT FROM BUILDING PANEL. (REFER TO ALARM LEAD-LAG WIRING DIAGRAM FOR ELECTRICAL REQUIREMENTS ON SHEET 4 OF SUBMITTAL DRAWINGS)
7. ELECTRICAL CONTRACTOR TO FURNISH AND INSTALL SOURCE OF BUILDING POWER (110-120V/20A CIRCUIT) TO ALARM LEAD-LAG PANEL. (REFER TO SHEET 4- LEAD-LAG WIRING DIAGRAM.)
8. MORTECH INSTALLER TO FURNISH AND INSTALL CONDUIT AND WIRING FOR LEAD-LAG SYSTEM AND TEMP SENSOR. (REFER TO WIRING DIAGRAM ON SHEET 4 OF SUBMITTAL DRAWINGS)
9. MORTECH INSTALLER TO INSTALL AND WIRE LOW VOLTAGE WIRING TO TEMP SENSOR AT THIS LOCATION.
10. ELECTRICAL CONTRACTOR TO FURNISH AND INSTALL SOURCE OF BUILDING POWER (110-120V 1PH/30A CIRCUIT) TO LIGHTS AND DOOR HEATER.
11. PLUMBING CONTRACTOR TO FURNISH AND INSTALL CONDENSATE DRAIN/FLOOR SINK.TO BE LOCATED OUTSIDE OF BODY COOLER WALL LOCATED NO MORE THAN 1FT.
12. MORTECH INSTALLER TO FURNISH AND INSTALL CONDENSATE DRAIN PIPE AND CLEAN OUT TO FLOOR DRAIN OF BUILDING FOR BODY COOLER
13. HOUSEKEEPING PADS, OR RACKS FOR CONDENSING UNIT SUPPLIED AND INSTALLED BY OTHERS
14. REFER TO MECHANICAL PLAN M0.00 FOR CONDENSING UNITS LOCATIONS
15. PERIMETER SPACING REQUIREMENT FOR CONDENSING UNIT MUST BE A MINIMUM OF 3 FEET CLEAR UNOBSTRUCTED SPACE.

REVISIONS				
REV.	DCN#	DESCRIPTION	DATE	CHANGED/APPROVED
X02	-	REVISED HEIGHT FROM 11'-2" O.D. TO 10'-10"	08/19/2019	RT
X01	-	PRELIMINARY RELEASE	XX/XX/XX	XX/

CUSTOMER: OKLAHOMA STATE UNIVERSITY

PROJECT: TULSA - OK

APPROVAL:

SIGNATURE: DATE:

TOLERANCE BLOCK: DIMENSIONS ARE IN INCHES

DO NOT SCALE DRAWING

MATERIAL: SEE FINISHES

FINISH: -

PROPRIETARY
THIS DOCUMENT AND THE DATE DISCLOSED HEREIN AND HEREWITH IS NOT TO BE REPRODUCED, USED, OR OTHERWISE DISCLOSED IN WHOLE OR IN PART TO ANYONE WITHOUT WRITTEN AUTHORIZATION FROM MORTECH MFG.

APPROVALS	DATE
DRAWN BY ROBERT	03/21/2019
CHECKED BY VICTOR	03/21/2019
APPROVED BY APPROVED BY	XX/XX/XX

MORTECH MANUFACTURING CO., INC. ISO 9001:2015 CERTIFIED COMPANY
411 North Aerojet Avenue
Azusa, CA 91702
TEL: (800) 410-0100 (626) 334-1471
FAX: (626) 334-1704
www.mortechmfg.com

TITLE: REFRIGERATION IMFORMATION & LAYOUT

SIZE: D | DWG NO.: WIC- 8446 | REV.: XO2

SCALE: 3/8" = 1'-0" | NEXT ASSY. | SHEET: 3 OF 6

CONTROL PANEL FIELD WIRING DIAGRAM–COOLER

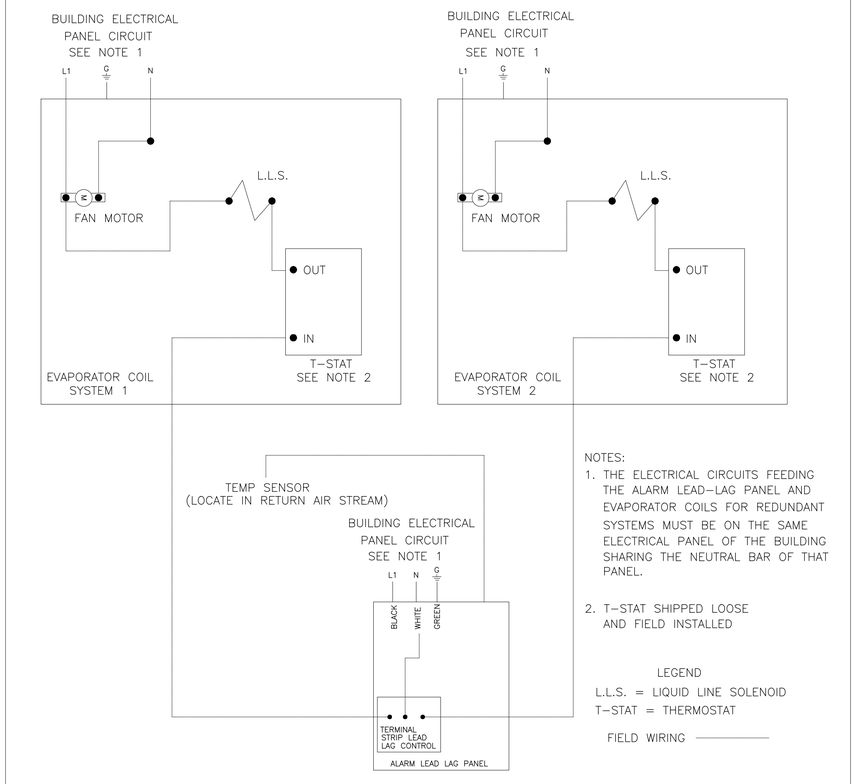

NOTES:
1. THE ELECTRICAL CIRCUITS FEEDING THE ALARM LEAD–LAG PANEL AND EVAPORATOR COILS FOR REDUNDANT SYSTEMS MUST BE ON THE SAME ELECTRICAL PANEL OF THE BUILDING SHARING THE NEUTRAL BAR OF THAT PANEL.
2. T–STAT SHIPPED LOOSE AND FIELD INSTALLED

LEGEND
L.L.S. = LIQUID LINE SOLENOID
T–STAT = THERMOSTAT
FIELD WIRING ————

REVISIONS				
REV.	DCN#	DESCRIPTION	DATE	CHANGED/APPROVED
X02	-	REVISED HEIGHT FROM 11'-2" O.D. TO 10'-10"	08/19/2019	RT
X01	-	PRELIMINARY RELEASE	XX/XX/XX	XX/

CUSTOMER: OKLAHOMA STATE UNIVERSITY
PROJECT: TULSA - OK
APPROVAL:
SIGNATURE: DATE:

TOLERANCE BLOCK:
DIMENSIONS ARE IN INCHES
DO NOT SCALE DRAWING
MATERIAL: SEE FINISHES
FINISH: -

PROPRIETARY
THIS DOCUMENT AND THE DATE DISCLOSED HEREIN AND HEREWITH IS NOT TO BE REPRODUCED, USED, OR OTHERWISE DISCLOSED IN WHOLE OR IN PART TO ANYONE WITHOUT WRITTEN AUTHORIZATION FROM MORTECH MFG.

APPROVALS	DATE
DRAWN BY ROBERT	03/21/2019
CHECKED BY VICTOR	03/21/2019
APPROVED BY APPROVED BY	XX/XX/XX

MORTECH MANUFACTURING CO., INC.™
ISO 9001:2015 CERTIFIED COMPANY
411 North Aerojet Avenue
Azusa, CA 91702
TEL: (800) 410-0100 (626) 334-1471
FAX: (626) 334-1704
www.mortechmfg.com

TITLE: LEAD-LAG WIRING DIAGRAM

SIZE: D | DWG NO.: WIC- 8446 | REV.: XO2
SCALE: 3/8" = 1'-0" | NEXT ASSY. | SHEET: 4 OF 6

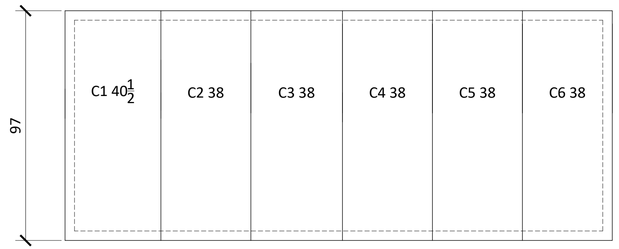

CEILING LAYOUT

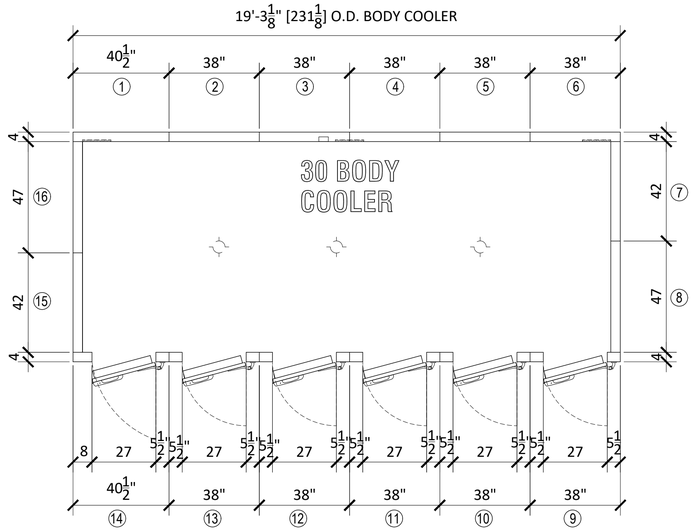

WALL PANEL LAYOUT

REVISIONS				
REV.	DCN#	DESCRIPTION	DATE	CHANGED/APPROVED
X02	-	REVISED HEIGHT FROM 11'-2" O.D. TO 10'-10"	08/19/2019	RT
X01	-	PRELIMINARY RELEASE	XX/XX/XX	XX/

CUSTOMER: OKLAHOMA STATE UNIVERSITY

PROJECT: TULSA - OK

APPROVAL:

SIGNATURE: DATE:

TOLERANCE BLOCK: DIMENSIONS ARE IN INCHES

DO NOT SCALE DRAWING

MATERIAL: SEE FINISHES

FINISH: -

PROPRIETARY
THIS DOCUMENT AND THE DATE DISCLOSED HEREIN AND HEREWITH IS NOT TO BE REPRODUCED, USED, OR OTHERWISE DISCLOSED IN WHOLE OR IN PART TO ANYONE WITHOUT WRITTEN AUTHORIZATION FROM MORTECH MFG.

APPROVALS	DATE
DRAWN BY: ROBERT	03/21/2019
CHECKED BY: VICTOR	03/21/2019
APPROVED BY: APPROVED BY	XX/XX/XX

MORTECH MANUFACTURING CO., INC.™
ISO 9001:2015 CERTIFIED COMPANY
411 North Aerojet Avenue
Azusa, CA 91702
TEL: (800) 410-0100 (626) 334-1471
FAX: (626) 334-1704
www.mortechmfg.com

TITLE: WALL PANEL & CEILING PANEL LAYOUT

SIZE: D | DWG NO.: WIC- 8446 | REV.: XO2

SCALE: 3/8" = 1'-0" | NEXT ASSY. | SHEET: 5 OF 6

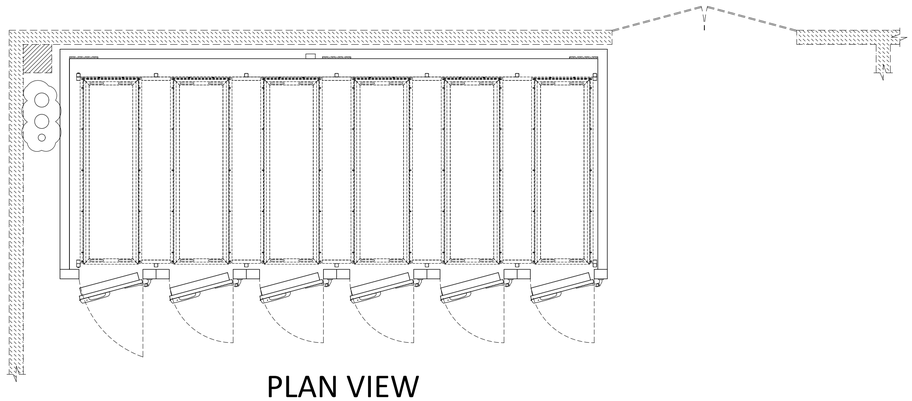

PLAN VIEW

LEFT ELEVATION

FRONT ELEVATION

REVISIONS				
REV.	DCN#	DESCRIPTION	DATE	CHANGED/APPROVED
X02	-	REVISED HEIGHT FROM 11'-2" O.D. TO 10'-10"	08/19/2019	RT
X01	-	PRELIMINARY RELEASE	XX/XX/XX	XX/

CUSTOMER: OKLAHOMA STATE UNIVERSITY

PROJECT: TULSA - OK

APPROVAL:

SIGNATURE: DATE:

TOLERANCE BLOCK:
DIMENSIONS ARE IN INCHES

DO NOT SCALE DRAWING

MATERIAL: SEE FINISHES

FINISH: -

PROPRIETARY
THIS DOCUMENT AND THE DATE DISCLOSED HEREIN AND HEREWITH IS NOT TO BE REPRODUCED, USED, OR OTHERWISE DISCLOSED IN WHOLE OR IN PART TO ANYONE WITHOUT WRITTEN AUTHORIZATION FROM MORTECH MFG.

APPROVALS	DATE
DRAWN BY: ROBERT	03/21/2019
CHECKED BY: VICTOR	03/21/2019
APPROVED BY: APPROVED BY	XX/XX/XX

MORTECH MANUFACTURING CO., INC.™
ISO 9001:2015 CERTIFIED COMPANY
411 North Aerojet Avenue
Azusa, CA 91702
TEL: (800) 410-0100 (626) 334-1471
FAX: (626) 334-1704
www.mortechmfg.com

TITLE: PLAN VIEW, ELEVATION VIEWS W/ BODY RACKS

SIZE: D | DWG NO.: WIC- 8446 | REV.: XO2

SCALE: N.T.S. | NEXT ASSY. | SHEET: 6 OF 6

MODEL M600, M601, M601-SL CADAVER LIFT ACCESSORIES

3277

Series M600 Roller Pallet Assembly

STANDARD DESIGN FEATURES

- All stainless steel construction
- 11 gauge tubing for heavy duty use
- 10 maintenance-free nylon rollers for easy transfer
- Can be used from either end for loading or unloading
- Flip style tray stops at each end with bumper protection
- A necessity for the Total Roll Cadaver System.

M600



Model M600-SC Roller Pallet Scale Assembly

- (10) maintenance-free nylon rollers for easy transfer
- Can be used from either end for loading or unloading
- Full-functioning scale

M600 -SC





Series M601 Full Roller Pallet Assembly

- (5) maintenance-free conveyor rollers for easy transfer
- Can be used from either end for loading or unloading
- Flip-style tray stops at each end with bumper protection

M601



Model M601-SL Side Loading Roller Pallet Assembly

- (10) maintenance-free conveyor rollers for easy transfer
- Flip-style tray stops for outer side

M601-SL



Series M601-ES End/Side Loading Roller Pallet Assembly

STANDARD DESIGN FEATURES

- All stainless steel construction
- 11 gauge tubing for heavy duty use
- (5) Rows rota-rollers for easy transfer, utilizing both the front or side of the pallet

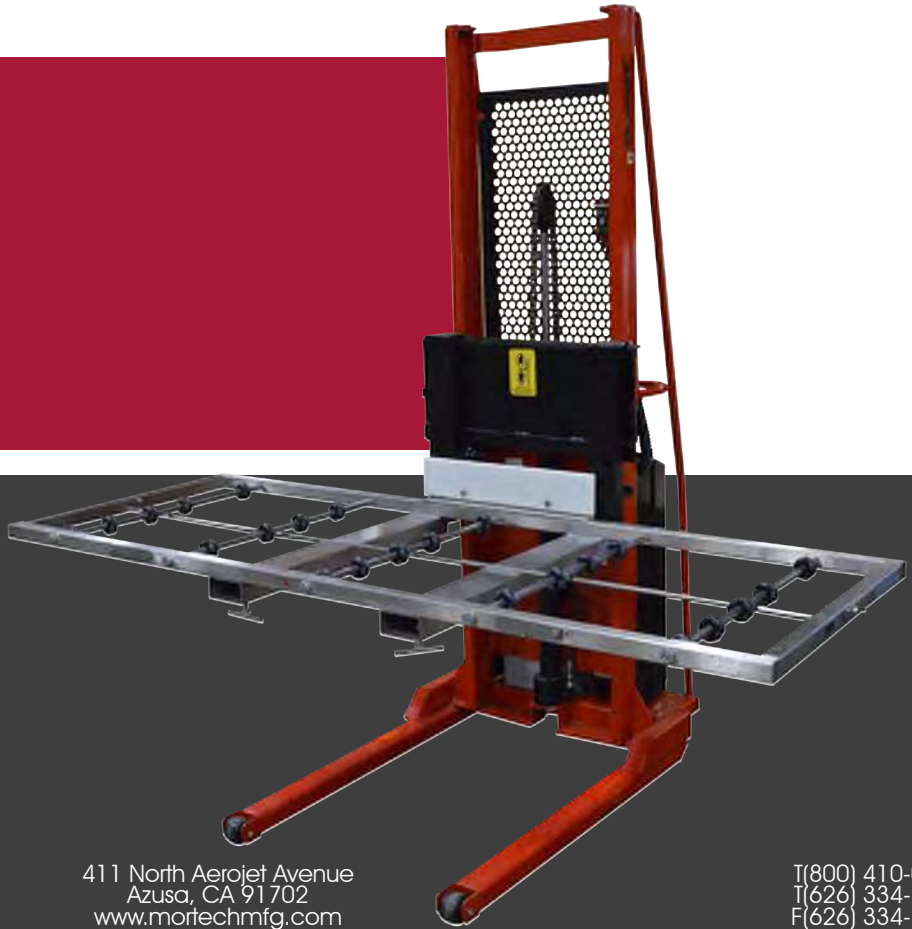

411 North Aerojet Avenue
Azusa, CA 91702
www.mortechmfg.com

T(800) 410-0100
T(626) 334-1471
F(626) 334-1704

CADAVER HANDLING & STORAGE SYSTEMS

SERIES M678-FP MANUAL FOOT PUMP OPERATION CADAVER LIFT

Dimensions
Width: ..... 30 in./76 cm.
Depth: ..... 48.375 in./123 cm.
Height: ..... 77.75 in./197 cm.
Load Capacity: .....1000 lbs./453 k.

STANDARD DESIGN FEATURES

- Floor locks, safety screen, and foot guard are standard
- Front phenolic wheels are 5" diameter and static, rear phenolic swivel casters are 4" diameter

- Forks:1 in./2 cm. thick X 3 in./7 cm. wide X 30 in./76 cm. long
- Adjustable span up to 25 in./63 cm.
- 15 in./38 cm. load center
- Base leg span - 15 in./ 38 cm. inside, 21 in./53 cm. outside





M678-FP FOOT PUMP OPERATED CADAVER LIFT

M678



M678 BATTERY OPERATED HYDRAULIC CADAVER LIFT ADJUSTABLE

SERIES M678 HYDRAULIC CADAVER LIFT

The battery-operated hydraulic cadaver lift is designed with a narrow straddle which allows you to ease through congested work areas and narrow aisles. An expanded metal safety screen with reinforced edges provides operator protection. The hydraulic lift is powered by a heavy-duty 12V battery with a built-in 12A automatic tapering battery charger. The lift is equipped with floor protective 2 in./5 cm. diameter front-load phenolic wheels and a rear foot-controlled floor brake mechanism.

Lifting Specifications

Max Height:..... 61.375 in./156 cm.
(forks @ standard setting)
Min Height:..... 23.875 in./61 cm.
(with forks reversed)
Max. Height:..... 83.5 in./212 cm.
(with forks reversed)

OPTIONAL FEATURES
1. Front and side rolling caster for all-direction moving
2. Front 5" diameter phenolic wheel works with floor ramps

SERIES M678 HYDRAULIC CADAVER LIFT

411 North Aerojet Avenue
Azusa, CA 91702
www.mortechmfg.com

T(800) 410-0100
T(626) 334-1471
F(626) 334-1704

CADAVER HANDLING & STORAGE SYSTEMS

MODEL M600, M601, M601-SL CADAVER LIFT ACCESSORIES

Series M600 Roller Pallet Assembly

STANDARD DESIGN FEATURES

- All stainless steel construction
- 11 gauge tubing for heavy duty use
- 10 maintenance-free nylon rollers for easy transfer
- Can be used from either end for loading or unloading
- Flip style tray stops at each end with bumper protection
- A necessity for the Total Roll Cadaver System.

M600



Model M600-SC Roller Pallet Scale Assembly

- (10) maintenance-free nylon rollers for easy transfer
- Can be used from either end for loading or unloading
- Full-functioning scale

M600 -SC





Series M601 Full Roller Pallet Assembly

- (5) maintenance-free conveyor rollers for easy transfer
- Can be used from either end for loading or unloading
- Flip-style tray stops at each end with bumper protection

M601



Model M601-SL Side Loading Roller Pallet Assembly

- (10) maintenance-free conveyor rollers for easy transfer
- Flip-style tray stops for outer side

M601-SL



Series M601-ES End/Side Loading Roller Pallet Assembly

STANDARD DESIGN FEATURES

- All stainless steel construction
- 11 gauge tubing for heavy duty use
- (5) Rows rota-rollers for easy transfer, utilizing both the front or side of the pallet

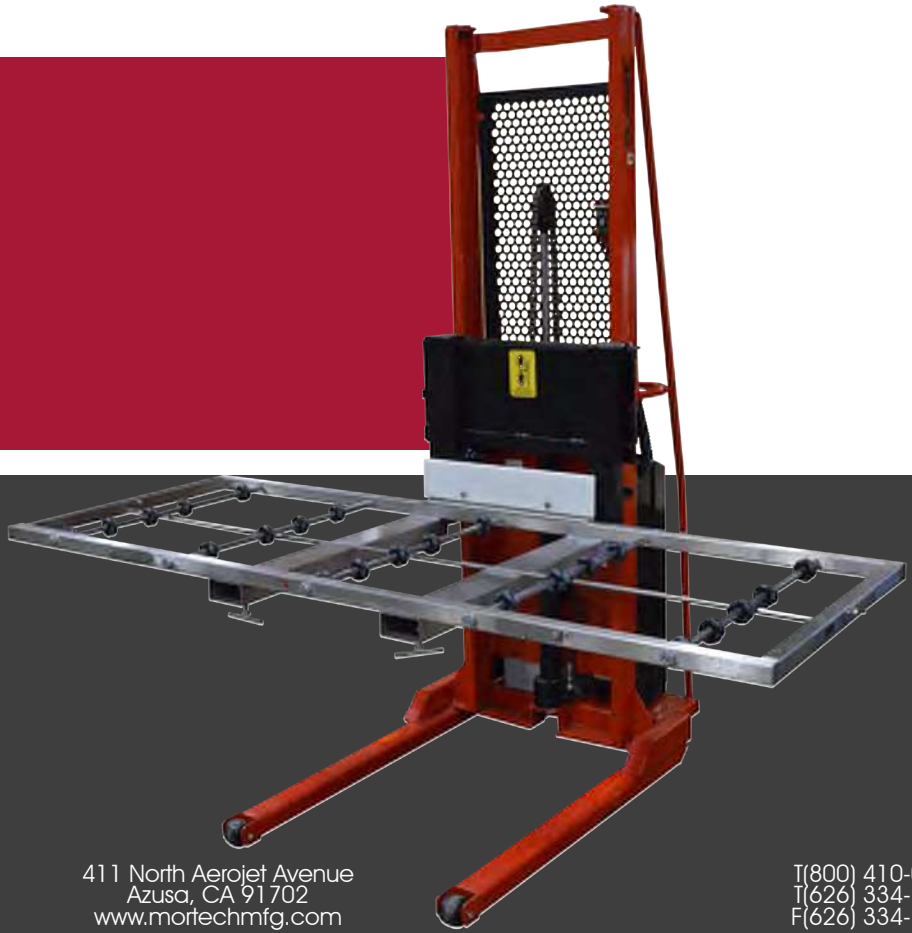

411 North Aerojet Avenue
Azusa, CA 91702
www.mortechmfg.com

T(800) 410-0100
T(626) 334-1471
F(626) 334-1704



Series M678 w/M604-H
Strap Tray Lift Assembly



MODEL M677 w/M604-C
Strap Tray Lift Assembly



Model M604
Strap Tray Lift Assembly

STANDARD DESIGN FEATURES

- All stainless steel construction
- .120 thick tubing for heavy duty use
- (4) Sturdy strap supports
- Straps attach easily to T3626HS
- Fits any of our cadaver lifts

Model M605
Strap Body Lift Assembly

STANDARD DESIGN FEATURES

- All stainless steel construction
- .120 thick tubing for heavy duty use
- (4) adjustable nylon straps
- Straps slide easily under body
- Fits any of our cadaver lifts

Series M678 w/M605-H
Strap Body Lift Assembly

M604 M605

MODEL M604, M605
CADAVER LIFT ACCESSORIES

T(800) 410-0100
T(626) 334-1471
F(626) 334-1704

411 North Aerojet Avenue
Azusa, CA 91702
www.mortechmfg.com

MORTECH™
MANUFACTURING INC.
ISO 9001:2008 CERTIFIED COMPANY

3277
power requirements on page 4 (highligted)

Technical Users' Manual
Installation and Operating Instructions



M678 BATTERY OPERATED HYDRAULIC CADAVER LIFT w/M600 ROLLER & M601 PALLET ASSEMBLIES

CAUTION
• Inspect unit and all components for any loosening that may have occurred during shipping •

ATTENTION
Review entire manual before starting assembly

ATTENTION
All images and Drawing in this manual may not represent your model. Refer to your particular project for exact specifications

WARNING
Biohazard Label is place on the equipment signifying the potentially infectiousness due to the samples or reagents



Mortech™ Manufacturing Inc.
411 North Aerojet Avenue, Azusa, CA 91702
(626) 334-1471 www.mortechmfg.com

JUNE 2013
ISO Doc. #0MM678-M600-M601 (REV C)

It is important that the information provided in this manual is observed. These instructions should be read carefully and observed fully before installation and initial operation.

WARNING

It is crucial that any work performed on Mortech Manufacturing Inc. manufactured items are carried out exclusively by skilled professionals who have the respective training. Improper use, maintenance, parts and service, or modification to the equipment may cause injury and/or damage. Use and maintain the equipment only for the purpose described in this manual. Use only Mortech Manufacturing Inc. prescribed approved parts and service. Use the equipment only as designed by Mortech Manufacturing Inc.

BLOODBORNE DISEASE NOTICE

To reduce the risk of exposure to bloodborne diseases such as HIV-1 and hepatitis when using the equipment, follow the disinfecting and cleaning instructions in this manual.

RECOMMENDED OPERATING SKILLS AND TRAINING

- SKILLS

Operators using the equipment need:

❑ A working knowledge of necessary procedures.

❑ The ability to carry out necessary service procedures.

❑ A complete understanding of the procedures described in this manual.

- TRAINING

❑ Read the this manual as prescribed

❑ Be trained on the use of the equipment.

❑ Practice with the equipment before using it in regular service.

❑ Be tested on their understanding of the equipment operation.

❑ Record their training.

BEFORE USING THE EQUIPMENT

Personnel working with this equipment needs to read this manual. Assemble of the unit following set instructions, and perform any pre-service checks to confirm the units operates properly.

INSPECTING THE UNIT BEFORE USE

Please take time to inspect all shipment prior to signing delivery ticket. If concealed damage is discovered, save the carton and immediately contact carrier agent to initiate claim of damage.

! BE SURE TO CHECK

- Are all components present?
- Do the moving parts operate smoothly?
- Is unit draining properly?
- Are all nuts, bolts, and pins secured in place?

If unit has an issue contact Mortech Manufacturing Inc.

INSTRUCTION FOR HANDLING

Adhere to state and/or local certification and regulations for operation of forklift and/or pallet jack. Cargo is extremely heavy, be sure to have the necessary manpower as well as equipment to successfully unload shipment from transport. We recommend a forklift and/or pallet jack with the capacity to lift up to 2000 lbs. to remove cargo from transport.

The forklift can be used to unload receiving products safely by placing the load on the floor, maneuvering the forklift into position, tilting the mast forward to vertical position so the load will be level, lowering the load, and smoothly backing away without dragging. Once cargo is unloaded, positioning equipment for installation will once again require a forklift. Read all manual and note on installation of the unit before attempting installing.

The pallet jack can be used (with a loading dock and maneuverability on and off the transport vehicle) to unload receiving products safely. Maneuvering the pallet jack into position (in the appropriate position within the pallet), lifting the pallet then driving the pallet jack off the transport and safely into the place of installation.

Range of Environmental Condition

Mortech Manufacturing. Inc. equipment shall be placed in a controlled environment (housing or housed unit) hindering the weathering effects on the installed units. The equipment will have minimal corrosive and eroding factors that can break down the stability and operation of Mortech Manufacturing Inc. equipment. The impact on the equipment by the operator utilizing water or corrosives in the medical procedures can be controlled and responsibility for the cleaning and maintenance placed upon that person. The effects of anthropogenic (man-made) gasses on the environment, such as carbon dioxide (CO2) that will be omitted from the unit should be minimal.

Due to continuous innovation and product development this installation guide is subject to change without notice.

Please save these instructions for later use.

POWER LIFT STACKER

Operating Instructions and Parts Manual

ATTENTION: To Ensure proper use of your Power Lift Stacker, read these instructions thoroughly before using. it is important that all personnel, involved with the installation, maintenance or operation of the stacker, read the manual.

SPECIFICATIONS

See nameplate on unit for capacity, load center, model number and truck serial number.

This product is manufactured by:

WESCO Industrial Products, Inc.
P.O. Box 47
Lansdale, PA 19446
Tel: (215) 699-7031
FAX: (215) 699-3868

Contact the factory if you have start up problems after reading these instructions, for parts information and parts ordering.

UNPACKING

When unpacking your unit, check carefully for shipping damage. If damage has occurred, file a claim with the delivery carrier within 24 hours and notify the dealer for whom the unit was purchased.

START-UP

1. Remove the plastic cover by removing the for hex bolts, two on the top and one on each side (Fig-1).

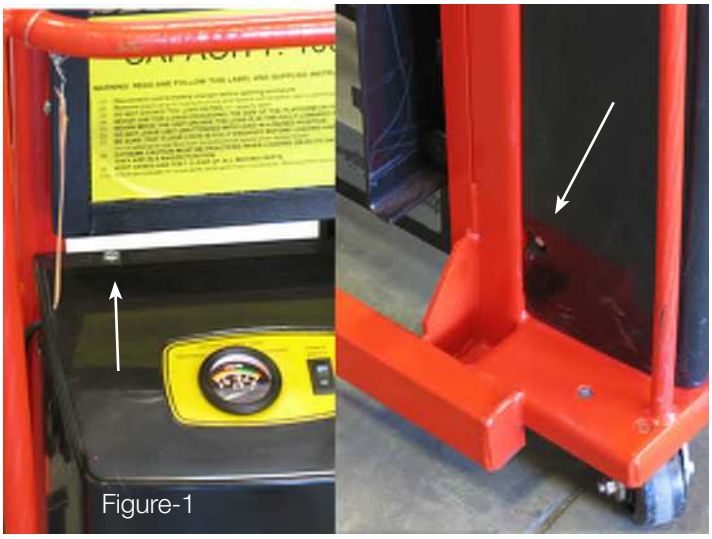

Figure-1

Then disconnect the switch and gage at the plastic connector (Fig-2)
2. check for signs of damage, especially to the back cabinet that houses the battery, electrical/hydraulic power pack.
3. Remove plastic pipe plug from oil reservoir, screw in breather cap.
4. Connect negative (black) wire to negative battery terminal.
5. Check all electrical connections for tightness.
6. Run unit up and down and check for any hydraulic oil leaks.
7. Do not use the lift if there appears to be any damage.



Figure-2

8. Reinstall plastic cover.

GENERAL SAFETY INFORMATION

WARNING Power Lift Stackers are intended for a wide range of uses. To ensure proper use, the following instructions must be adhered to:

1. Load rating- The capacity of your unit is shown on a metal tag attached to the truck. It is based on the load center also shown on the tag.
2. Do not use your unit for loads exceeding the size of the platform or forks.
3. Never move unit unless the load is in the fully lowered position.
4. Power lift Stackers are intended for movement of loads and lifting of loads to work position, not for moving of loads in a raised position.
5. The floor lock is designed for minimizing movement of unit during loading and unloading items from the unit themselves. It is not to be used to control truck sped when being moved. Be sure that lock is fully engaged before loading and unloading.
6. Do not perform any repair work on lift if there is a load on the forks or platform is raised.
7. All personnel must stand clear of the lift while lifting or lowering .
8. Do not stand, sit or climb on the lift or use lift to lift personnel.
9. Do not put hands or feet or stand underneath the forks or platform when raised.
10. Do not use lift on soft, uneven or unstable surfaces.
11. Custom alterations of unit for specific functions not made at the factory void all warranties without exceptions. User made alteration may result in unsafe conditions during use of unit.

OPERATIONS

Operating Instructions

1. Place power switch to ON position.
2. To raise lift, push UP button and hand control pendant.
3. To lower lift, push DOWN button.
4. Whenever the control button is released, the lift will stop.
5. Authorized operation should read and understand all instructions, precautions and warnings. Improper use of this lift truck could result in injury and/or damage to load and equipment.

-Use lift on hard level surfaces only.

-make sure load is evenly distributed, not loose or unstable, and as fa back on the platform or forks as possible.

DO NOT PICK UP LOADS ON TIPS OF FORKS OR EDGE OF PLATFORM.

-For fork models, adjust forks to the maximum practical width. Use two forks not one to pick uploads.

-Make sure travel, work are and overhead are clear of obstructions before lifting or moving loads.

-Make sure floor lock pad is in firm contact with floor before lifting or lowering load or using as a workstation.

6. Turn unit OFF when not in use, to prolong battery life.

(B) Daily Maintenance Checks:

WARNING- Battery should be recharged on a regular basis. Repeated total discharge of battery can result in battery failure.

1. Battery

Check charge level.
Check for corroded or loose terminals.
Visually inspect for any cracks or damage to to battery casing.
Check for loose battery tie downs.

2. Charger

Inspect wire connections.
check power cords for damage

3. Hydraulic system

Inspect pump and cylinder for oil leaks.
Check fluid level. Reservoir should be a minimum of one half full with a good grade of hydraulic oil.

DO NOT USE HYDRAULIC BRAKE FLUID.

Check hydraulic fittings and hoses.
Check piston rod for nicks/damage.

4. Frame assembly

Check floor lock.
Check safety screen and guard.
Check chain/roller assembly connections.
Check for any worn or damaged parts.

(C) Monthly Maintenance Checks

1. Battery

Clean battery compartment area.
Clean terminals.

2. Hydraulic system

Clean and inspect hydraulic cylinder.
Lubricate chain with a rust inhibitive chain lube.
Check chain tension with lift at its lowest height, chain could be tight enough so that it does not come off roller assembly.

3. Frame assembly

Clean and lubricate all roller bearings and cam followers.
Clean and inspect all welds.
Check wheels for wear and damage.
Inspect nameplate for legibility.

(D) Battery charging

1. Plug charging into a nominal 120 volt ground circuit outlet, charging will begin.

2. Battery will be fully charged when voltmeter indicates 12.0-13.4 volts, less than 12.0 volts battery is not fully charged.

3. When battery is fully charged unplug charger cord from electrical outlet.

DO NOT ATTEMPT TO MOVE STACKER WHEN CHARGING BATTERY!

4. The battery charger cord can be left plugged in for an indefinite period of time. The charger may be used any time to extend the operating time of the battery. You may have to wait until the battery is run down.

5. The voltmeter will indicate battery condition even when the charger cord is not plugged in.

POWER-LIFT STACKER PARTS LIST					
ITEM	**QTY**	**DESCRIPTION**	**56”/60” LIFT**	**64”/68” LIFT**	**76”/80” LIFT**
1	1	HYDRAULIC CYLINDER	051166	051164	051163
2	2	POWER UNIT	109101	109101	109101
3	1	BATTERY	109102	109102	109102
4	1	VOLTMETER	109104	109104	109104
5	1	BATTERY CABLE (NEG.)	052782	052782	052782
6	1	BATTERY CABLE (POS.)	052770	052770	052770
7	1	SOLENOID	109117	109117	109117
8	1	BATTERY CHARGER (110 V)	109150	109150	109150
	1	BATTERY CHARGER (220 V)	109153	109153	109153
9	1	HYDRAULIC HOSE	125824	125824	125824
10	1	ASS’Y: REMOTE CONTROL	052726	052726	052726
11	1	SWITCH	109325	109325	109325
12	1	LIFT CHAIN ASSEMBLY	050771	050771	050771
13	1	ROLLER CARRIER ASS’Y	260143	260143	260143
14	1	FLOOR LOCK	150001	150001	150001
15	2	WHEEL	053769	053769	053769
16	2	CASTER	054265	054265	054265
HYDRAULIC CYLINDER PARTS LIST					
18	1	CYLINDER	051074	051073	051072
19	1	PISTON	051196	051196	051196
20	1	CYLINDER CAP	051198	051198	051198
21	1	SEAL KIT	220170	220170	220170
*21A		“O” RING	-------	-------	-------
*21B		“O” RING	-------	-------	-------
*21C		“O” RING	-------	-------	-------
*21D		“O” RING	-------	-------	-------
*21E		PISTON GUIDE RING	-------	-------	-------
PARTS SHOWN WITH (*), COMPROMISE “SEAL KIT” P/N 220170					

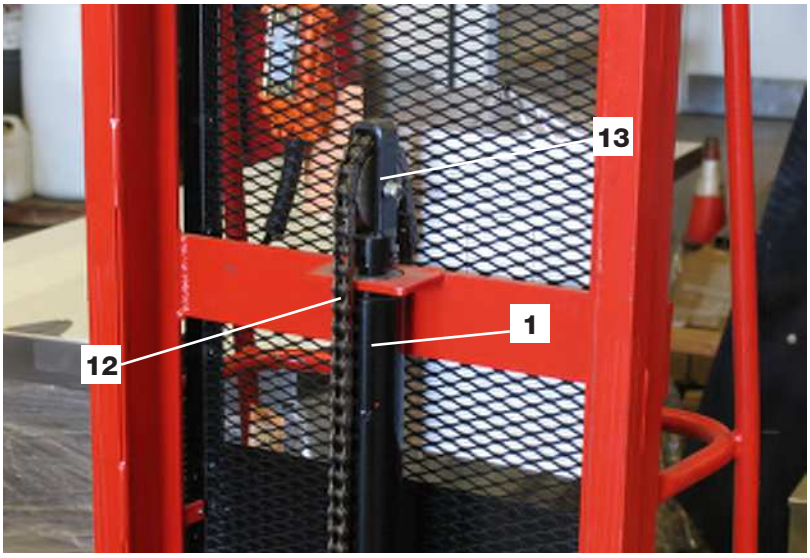



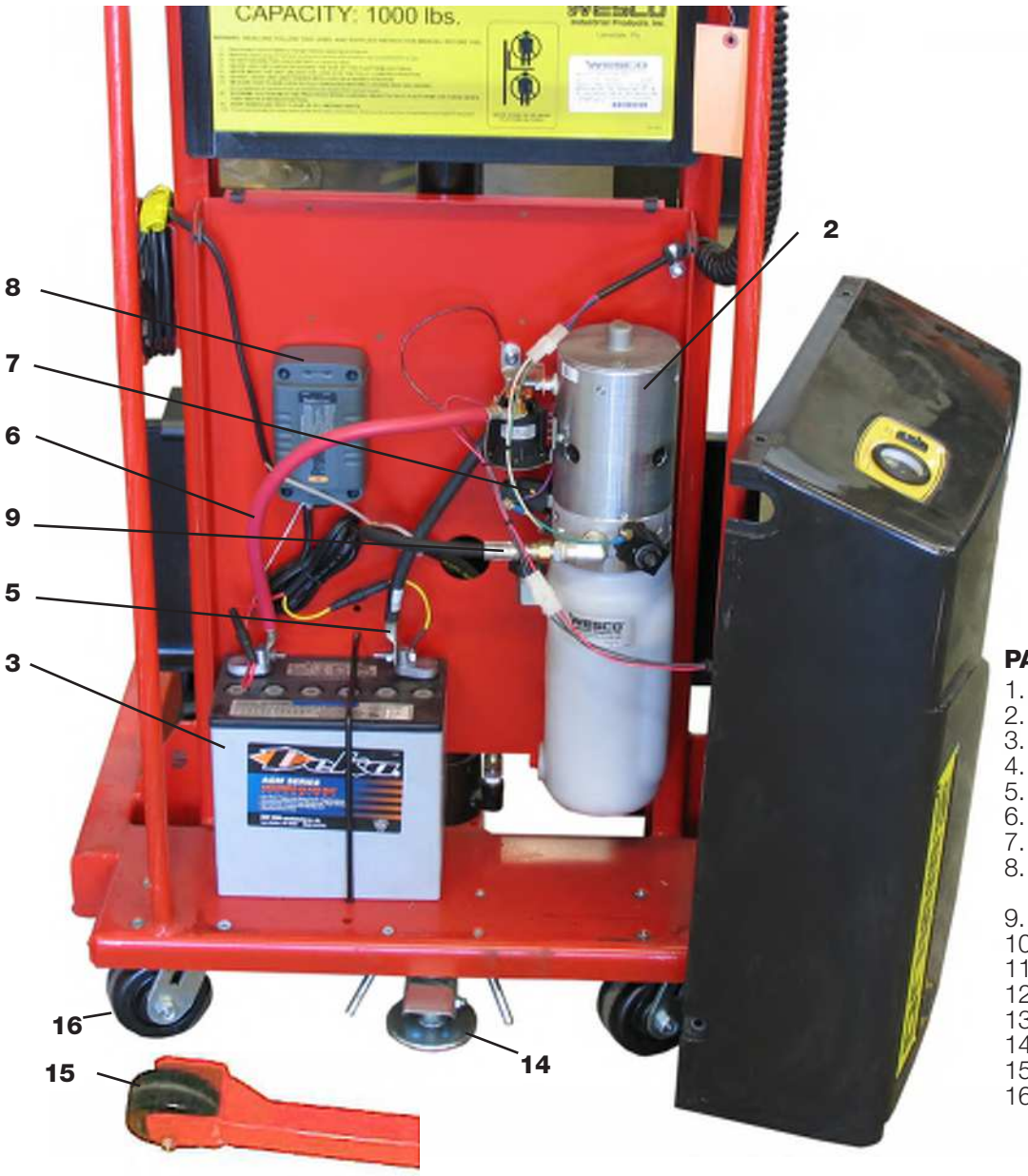

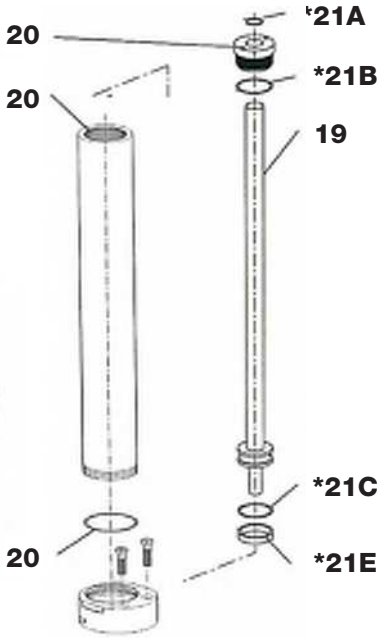

PARTS LISTING

1. HYDRAULIC CYLINDER
2. POWER UNIT
3. BATTERY
4. VOLTMETER
5. BATTERY CABLE (NEG.)
6. BATTERY CABLE (POS.)
7. SOLENOID
8. BATTERY CHARGER (110 V)
   BATTERY CHARGER (220 V)
9. HYDRAULIC HOSE
10. ASS'Y: REMOTE CONTROL
11. SWITCH
12. LIFT CHAIN ASSEMBLY
13. ROLLER CARRIER ASS'Y
14. FLOOR LOCK
15. WHEEL
16. CASTER

M678 FORK INVERSION INSTRUCTIONS

THE FORK ASSEMBLY HAS BEEN DESIGNED TO FIT THE LIFT TWO WAYS.

Figure-1
The fork are positioned to slide underneath the object to be lifted. To invert the forks so the forks are in a position to left an object from the top side of the object. (Using straps or ropes) Lift upward on the lower side of the fork to be inverted. WARNING-The forks are heavy take necessary precaution lifting the forks, preferably two people.



Figure-2
After inverting the fork, slowly line up the groove catch on the top side of the fork to the fork lift lifting assembly. Gently slide the fork toward the center of the lifting assembly.



Figure-3
Showing successfully inverting the fork.
Repeat the process for the other fork needing inversion.



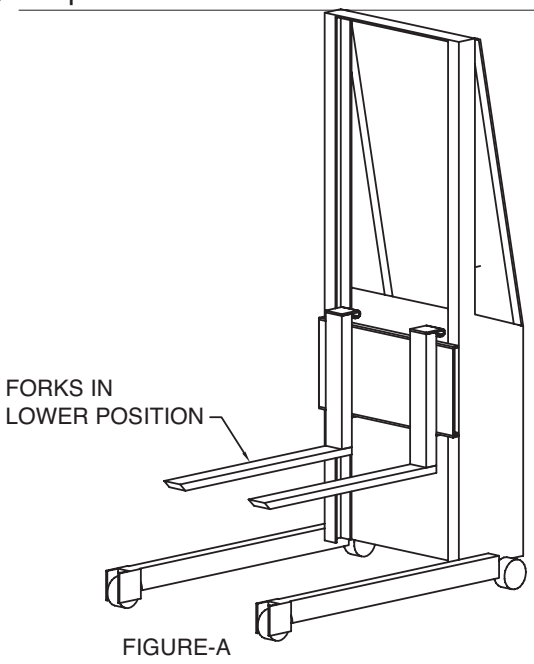

FIGURE-A

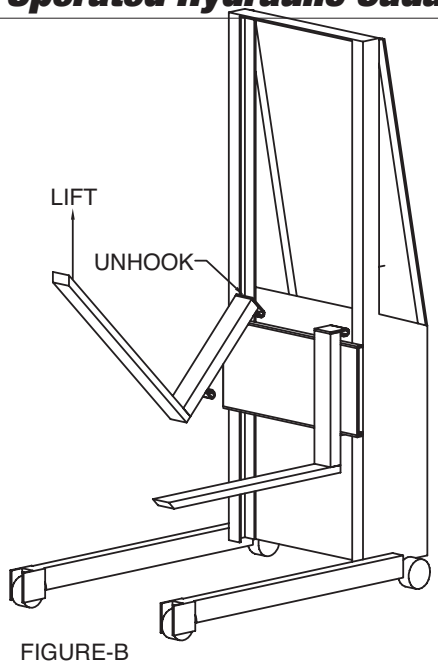

FIGURE-B

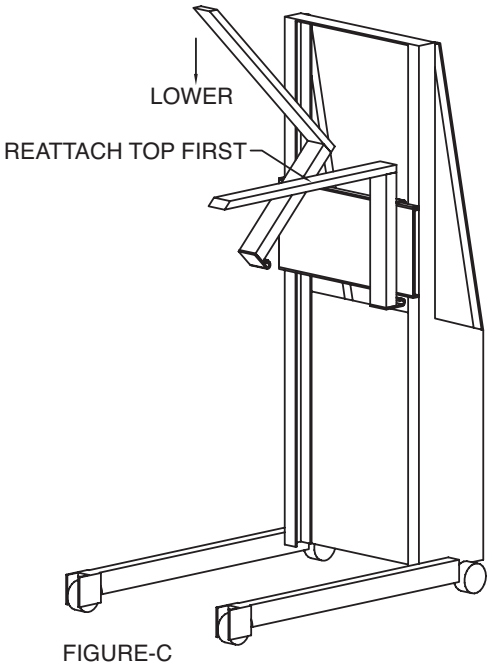

FIGURE-C

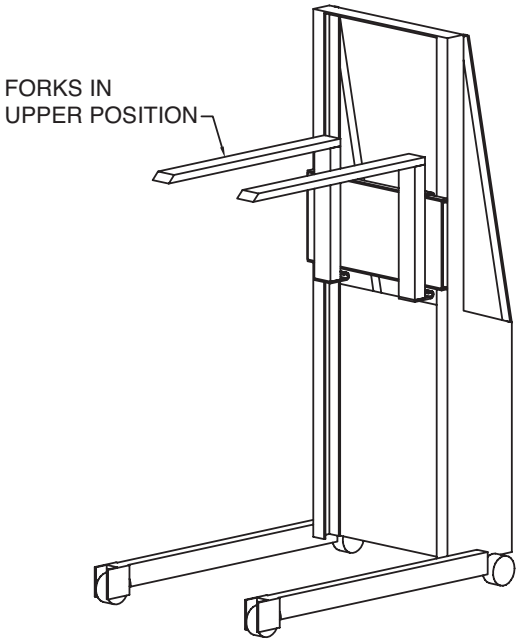

FIGURE-D

FORK INVERSION INSTRUCTIONS

THE FORK ASSEMBLY HAS BEEN DESIGNED TO FIT THE LIFT TWO WAYS.

STEP 1. FIGURE-A SHOWS THE FORK ASSEMBLY INSTALLED TO ACCOMMODATE THE LOWEST TIER ON A RACK.

STEP-2. LIFT THE FORK ASSEMBLY, ONE AT A TIME, OFF THE RACK AS SHOWN IN FIGURE-B.

STEP-3. INVERT THE FORK AND REATTACH, TOP HOOK FIRST AS SHOWN IN FIGURE-C.

FIGUR-D NOW SHOWS THE FORK ASSEMBLY INVERTED TO ACCOMMODATE THE HIGHEST TIER ON THE RACK. DETERMINE YOUR IMMEDIATE NEED AND INSTALL THE FORKS ACCORDINGLY.

TROUBLESHOOTING		
PROBLEM	**CHECK**	**SERVICE REQUIRED**
Stacker does not operate. (Pump does not run)	Power switch is in OFF position.	Place in the ON position.
	Battery charger indicator lights. voltmeter indicates 12 volts	Charge battery until yellow or green light is lit.
	Batter terminals and cable	Clean if corroded (while powder). Tighten terminal bolts.
	Hydraulic oil level	Fill oil reservoir to proper level.
Stacker does not lift to full height. (Pump runs)	Oil leaks	Tighten fittings. Replace hydraulic hose if required.
Stacker creeps down under load.	dirt in holding valve open	raise stacker to full height then lower in stages, 6" to 12" at a time to its lowest point. Repeat this cycle several times until dirt is cleared and unit operates properly. Replace oil with clean hydraulic oil if contaminated.
	Oil leaks	Tighten fittings. Replace hydraulic hoses if required. Replace "O" rings.
Pump turns continuously.	Malfunction solenoid	Replace pump motor solenoid.

WARRANTY REPAIRS

If unit does not work properly, contact your dealer or the factory (215) 699-7031), within one year of purchased date.

NON-WARRANTY SERVICE

For units older than one year, repairs can be made easily on the site with factory supplied parts, or repair can be made at the factory. **NOTE-DO NOT SEND UNITS TO THE FACTORY FOR SERVICE WITHOUT OBTAINING A "RETURN MATERIAL AUTHORIZATION" (RMA) NUMBER FROM THE SERVICE DEPARTMENT. WE WILL NOT BE RESPONSIBLE FOR GOODS RETURNED WITHOUT PROPER AUTHORIZATION.**

TO PURCHASE PARTS

A complete parts list with drawings appears in this manual. TO ORDER PARTS contact the factory at the phone or the fax numbers shown on page 1 of this manual.

WARNING-CHARGER IS ESPECIALLY DESIGNED FOR USE WITH WESCO BATTERY. USE OF BATTERY OTHER THAN WESCO"S MAY RESULT IN DAMAGE TO CHARGER, AND WILL VOID ALL WARRANTIES.

LIMITED WARRANTY

wesco Industrial Products, Inc. (WESCO) warrants to the purchaser of this product for the period of one year from the date of purchase that this product shall be free of defect in material and/or workmanship, as follows:

1. WESCO will supply, at no charge, new or rebuilt replacements for any part that falls through a defect in material and/or workmanship during the warranty period. To obtain warranty service, you must return the product prepaid, to the WESCO factory.

2. This warranty does not cover any products or product parts which has been subject to accident, misuse, abuse or negligence. WESCO shall not be liable under this warranty if the product is used in the manner intended by the manufacturers a specified in the written instructions furnished with this product.

REPAIR OR REPLACEMENT AS PROVIDED UNDER THIS WARRANTY IS THE EXCLUSIVE REMEDY OF THE PURCHASER.

ANY EXPRESS WARRANTY NOT PROVIDED IN THIS WARRANTY DOCUMENT, AND ANY REMEDY FOR BREACH OF CONTRACT THAT, BUT FOR THIS PROVISION, MIGHT ARISE BY IMPLICATION OR OPERATION OF LAW, IS HERBY EXCLUDED AND DISCLAIMED. UNDER NO CIRCUMSTANCES SHALL WESCO BE LIABLE TO PURCHASER OR ANY OTHER PERSON FOR ANY INCIDENTAL OR CONSEQUENTIAL DAMAGES, WHETHER RISING OUT OF THE BREACH OF WARRANTY, EXPRESS OR IMPLIED, A BREACH OF CONTRACT OR OTHERWISE EXCEPT TO THE EXTENT PROHIBITED BY APPLICABLE LAW, ANY IMPLIED WARRANTY OF MERCHANTABILITY AND FITNESS FOR ANY PARTICULAR PURPOSE ARE EXPRESSLY LIMITED IN DURATION TO THE DURATION OF THIS LIMITED WARRANTY.

Some states do not allow the exclusion or limitation of incidental or consequential damages, or allow on how lang any implied warranty lasts, so the above limitation of may not imply to you. This warranty gives you specific legal rights, and you may also have other rights which vary from state to state.

©Copyright 2001 Wesco Industrial Products, Inc.

M600/M601 ROLLER PALLET ASSEMBLY

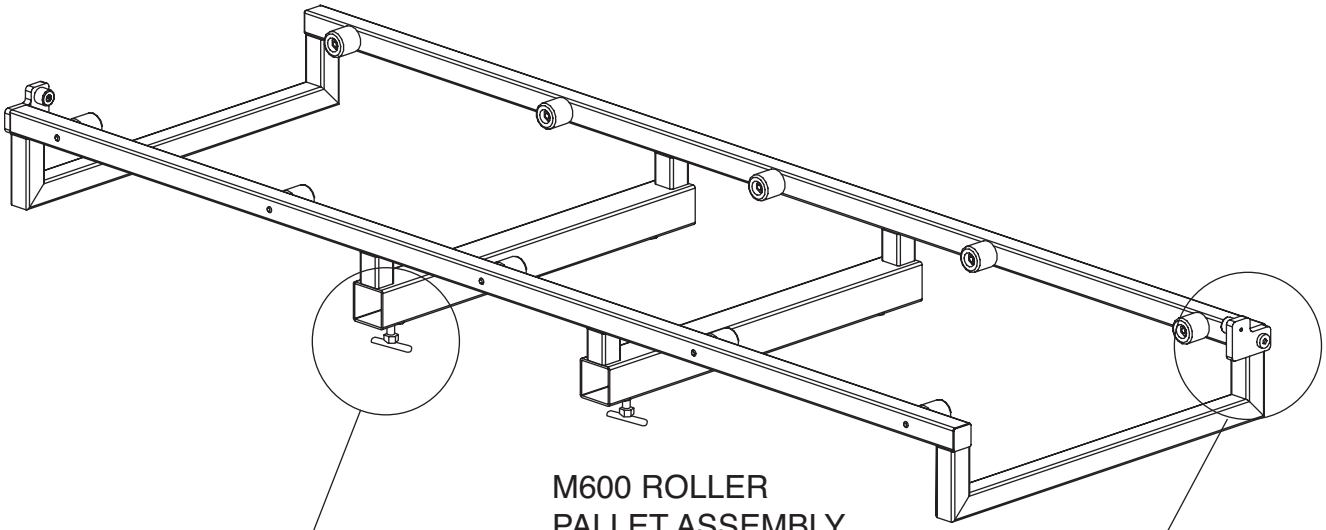

M600 ROLLER
PALLET ASSEMBLY

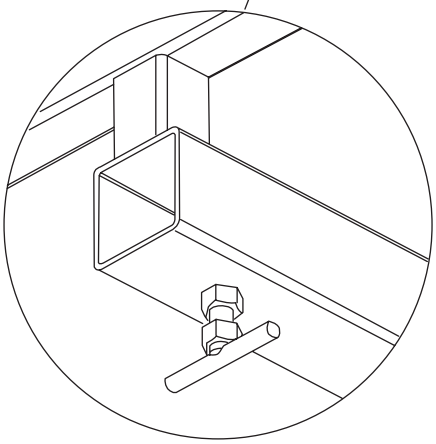

"T" HANDLE LOCKING MECHANISM

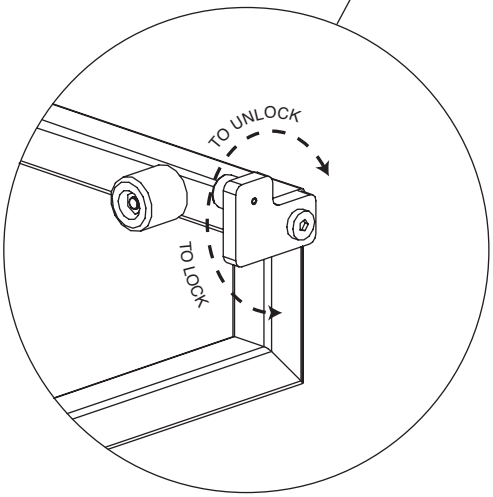

TRAY LOCKING MECHANISM

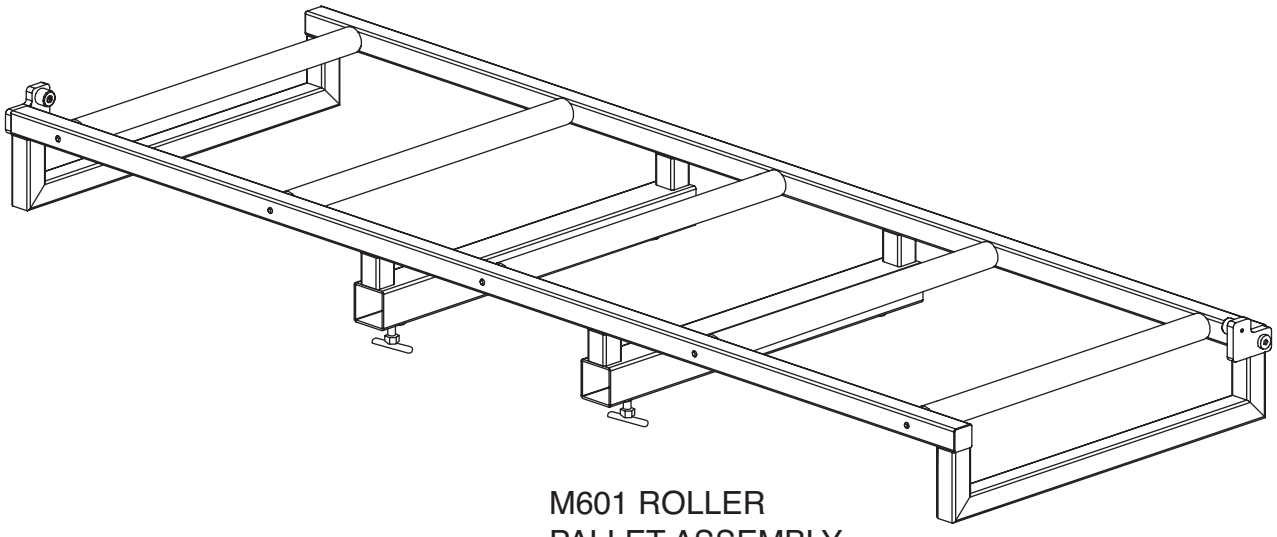

M601 ROLLER
PALLET ASSEMBLY

TOTAL ROLL CADAVER HANDLING SYSTEM

Total Roll Cadaver Handling System
All equipment in the system incorporates roller assemblies which allow for easy tray transfer from one component to the next. No manual lifting is required and in many instances only one person is required to complete the transfer. There are many equipment options to suit various needs and user preferences.



1. Transfer from Storage System to Cadaver Lift.
(Any lift can work with the system)

2. Maneuver Lift to Autopsy Carrier

3. Transfer from Cadaver Lift to Autopsy Carrier.

4. Roll Carrier to Autopsy Station





BODY TRANSFER PROCEDURES

Tray Loading/Unloading from Cadaver Carrier
Position Lifting Device with Roller System. Assembly at level of carrier. Slide Body Tray from carrier or lifting device as required to load or unload. Always follow all safety instructions per the manufacturer requirements for your lifting device.

Tray Loading/Unloading from Roller System
Position Lifting Device with Roller System Assembly at level to be loaded or unloaded. Slide Body Tray from roller system or lifting device as required to load or unload. Always follow all safety instructions per the manufacturer requirements for your lifting device.

TOTAL ROLL SYSTEM
M678 w/M600/M601

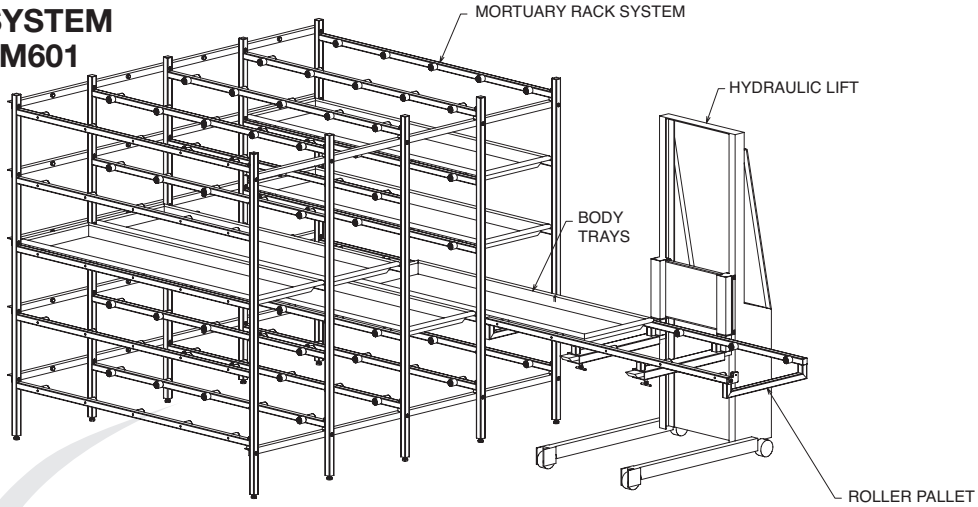

MANEUVER HYDRAULIC LIFT NEXT TO RACK. RAISE OR LOWER ROLLER PALLET TO MATCH DESIRED BODY TRAY. ROLL TRAY ONTO PALLET. ENGAGE TRAY STOPS AT EACH END. TRANSPORT TRAY TO CARRIER.

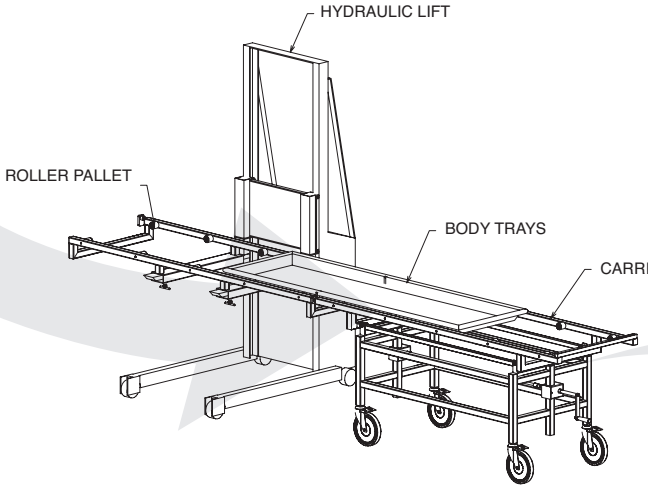

PLACE HYDRAULIC LIFT SO ROLLER PALLET AND CARRIER ARE END TO END. RAISE OR LOWER HYDRAULIC LIFT SO ROLLER PALLET AND CARRIER ARE EVEN. OPEN TRAY STOP AND ROLL BODY TRAY ONTO CARRIER. LOCK TRAY STOP ON CARRIER. TRANSPORT TO EMBALMING STATION.

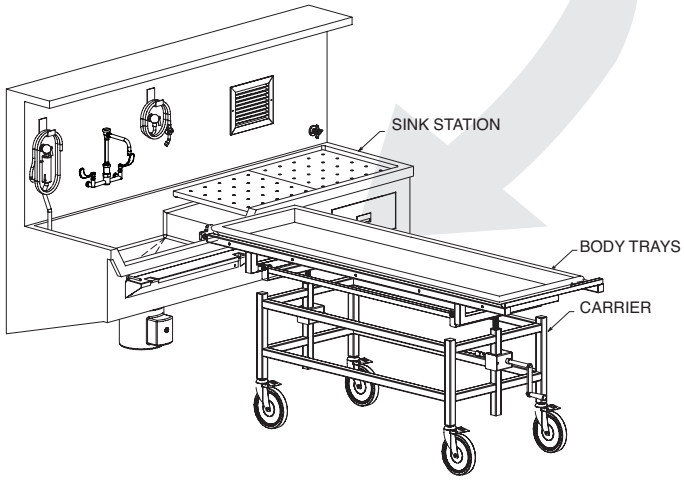

USING CRANK HANDLE, RAISE OR LOWER CARRIER TO SAME HEIGHT AS EMBALMING TABLE. OPEN TRAY LOCK AND ROLL BODY TRAY ONTO TABLE. LOWER TRAY LOCK AND READY TO USE.

M678 Battery Operated Hydraulic Cadaver Lift

Model M601 shown with Model M678



TRANSFER FROM CARRIER TO LIFT

After removal has been completed from the patient room, remove top canopy cover and aluminum frame. Align the lift with the height of the carrier and simply roll the body tray from the carrier onto the lift roller assembly.

The lift can be used to transfer the body tray to either a storage rack system or a mortuary refrigerator unit.

Model Model M678 Hydraulic Cadaver Lift fitted with our Model M601 Roller Pallet Assembly aligning with a hydraulic carrier.

TRANSFER FROM LIFT TO REFRIGERATOR

Once the body tray has been transferred to the lifting device, it can then be used to place the body on your storage system or mortuary refrigerator.

Please provide your space available and storage requirements and we will design a Total Roll System to meet your application We offer a wide range of mortuary refrigerators and storage systems which incorporate the same roller system and allow all equipment to be completely compatible. If all equipment is compatible, one person can make all body transfers without any manual lifting.



M600/M601
MOUNTING INSTRUCTIONS

THE FORK ASSEMBLY HAS BEEN DESIGNED TO FIT THE LIFT TWO WAYS.

1. Place the forks in a position that is the same width as the Lift Bars on the M600.

2. Lift the M600/M601 (use appropriate assistance in lifting to avoid injury), lining up the (2) Lift Bars at the bottom of the Lift Forks, slide the M600/M601 over the Lift Forks.

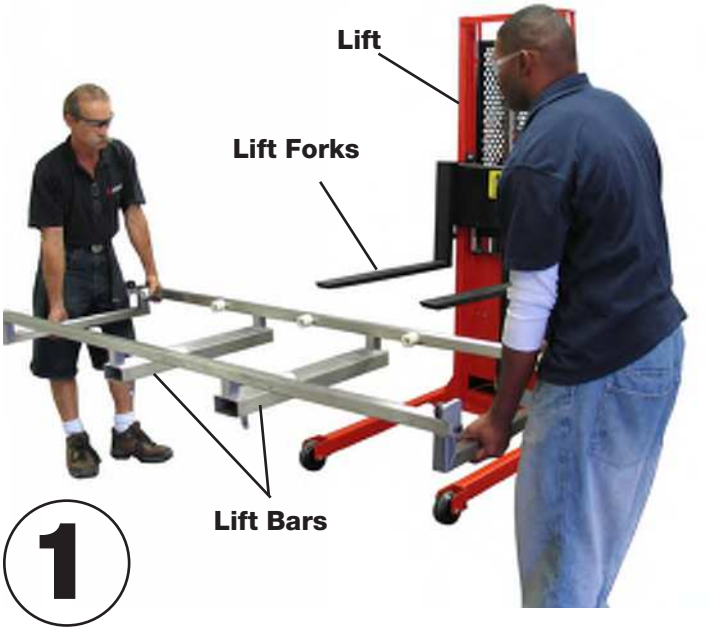



3. Line the end of the Lift Bars with the end of the Lift Forks.



Turn the Locking Bolt to secure the M600/M601

You are ready to transport.

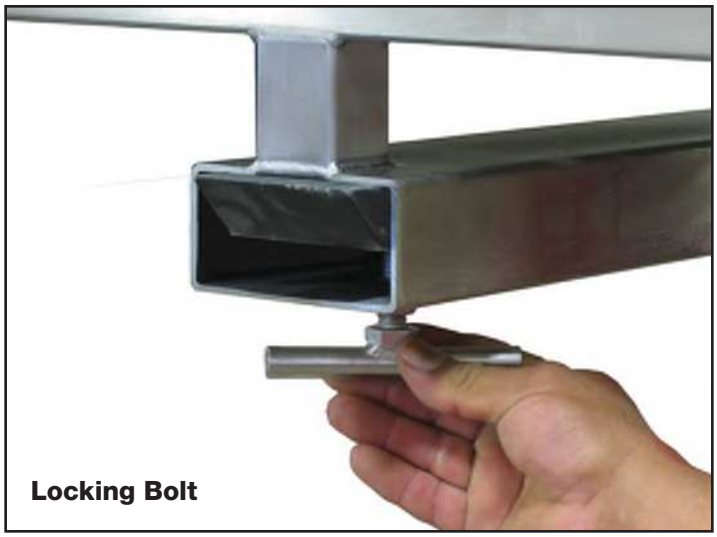

MAINTENANCE INSTRUCTIONS

The unit requires regular maintenance and follow the manufactures directions.

DISINFECTING AND CLEANING

Clean all surfaces of the stainless steel with a hard surface disinfectant/cleaner such as Sheila Shine® or SaniZene®. Follow instructions on container.

DISINFECTING, CLEANING COMPONENTS & ACCESSORIES

Hand wash with disinfecting soap and warm water. Rinse well with clear water and dry with a towel. (Clean on a regular basis to prolong work life).

WARNING

Improper maintenance can cause injury. Maintain only as prescribed in this manual. Overall, it is very simple to maintain. If you use for its intended purpose, it will provide many years of reliable service.

CARE OF STAINLESS STEEL

Stainless steel products have a directional #4 brushed finish. This finish is produced using a very fine abrasive cloth. Dragging heavy equipment across the stainless steel surfaces will cause noticeable scratching. Pitting/corrosion can occur when carbon steel products are allowed to remain in contact with the stainless steel in the presence of moisture. (Examples- Steel Wool pads left in the bottom of the sink). Stainless steel can be damaged by exposure to acids.

TYPES OF SURFACE CONTAMINANTS

- **Dirt -** Consist of accumulated dust and a variety of contaminates. Warm water with or without a gentle detergent is sufficient. Next in order are mild non-abrasive powders such as typical household cleaners. These can be used with warm water, bristle brushes, sponges, or cleaning cloths. (Do not use carbon steel brushes or steel wool they may leave particles embedded on the surface which can lead to RUSTING.) For more aggressive cleaning, a small amount of vinegar can be added to the scouring powder. When water contains mineral solids, which leave water spots, it is advisable to wipe the surface completely with dry towels.
- **Fingerprints and Stains -** Fingerprints and mild stains resulting from normal use are the most common surface contaminates. This affect the appearance and seldom have an effect on corrosion resistance. They can be removed with a glass cleaner or by gentle rubbing with a paste of soda ash (sodium carbonate) and water applied with a soft rag. Followed by a thorough warm water rinse and towel dry.
- **Shop Oil and Grease -** These soils may be corrosive and may not allow the surface to maintain passivity, and so removal is a necessity. Soap or detergent and water may be used or a combination of detergent and water plus a solvent.

TYPES OF CLEANERS AND METHODS

- **General Precautions**

Avoid using abrasive cleaners unless absolutely necessary. A “soft abrasive,” such as pumice, should be used. Many cleaners contain corrosive ingredients, rinse with clean water.

- **Clean Water and Wipe -** A soft cloth and clean warm water should always be the first choice for mild stains, loose dirt and soils. A final rinse with clean water and a dry wipe will eliminate the possibility of water stains.
- **Solvent Cleaning -** Organic solvents can be used to remove fresh fingerprints, oils and greases that have not had time to oxidize or decompose. The preferred solvent is one that does not contain chlorine, such as acetone, methyl alcohol, and mineral spirits.

EFFECTIVE CLEANING METHODS

Commercial Cleaners - Many commercial cleaners compounded from phosphates, synthetic detergents, and alkalis are available for the cleaning of severely soiled or stained stainless surfaces. When used with a variety of cleaning methods, these cleaners can safely provide effective cleaning.

SCRATCH REPAIR

Surface scratches can be repaired using the following technique. Depending on the severity of the scratch, it may be possible to completely remove it. Sand the scratch using 120 grit emery cloth or paper and firm pressure. Always sand in the direction of the grain. Avoid the natural tendency to sand in an arc, instead sand in a perfectly straight line. Sand until the scratch is gone.
Polish using 3M Scotch Brite pads - Very Fine Grade. Use the same motions as with sanding. Polish until the original finish is restored. Wash and wipe the surface completely with dry towels.

RUST REMOVAL

Rust can be repaired using the following technique. Sand the scratch using 120 grit emery cloth or paper and firm pressure. Always sand in the direction of the grain. Avoid the natural tendency to sand in an arc, instead sand in a perfectly straight line. Sand until the rust is gone.
Polish using 3M Scotch Brite pads - Very Fine Grade. Use the same motions as with sanding. Polish until the original finish is restored. Wash and wipe the surface completely with dry towels.

5 Stainless Steel Mistakes NOT to Make When Cleaning

1.Do not use abrasive cleaners that will scratch the surface. Depending on the surface finish of your stainless steel, abrasive cleaners can cause scratching. A dull finish, probably will not show scratching as much as mirror or highly polished finishes. Test the cleaner in a hidden spot. It’s also a good idea to work from the least risky type (water) of cleaning to the heavy duty stuff.

2. Do not forget to rinse. Gritty or dirty water can leave a residue on your finish. It can also stain or pit the surface of your stainless steel. Rinse completely. Residue from cleaning solutions left on a stainless steel surface can stain or damage finish.

3. DO NOT USE CLEANERS CONTAINING CHLORINE.
While it may be second nature to bleach everything, stainless steel and chlorine do not mix. Stay away from the bleach when you clean stainless steel. Be aware that bleach can be included in different types of cleaners. If you accidentally get a cleaner on your stainless steel you’ll need to rinse it off and quickly.

4. DO NOT USE STEEL WOOL OR STAINLESS BRUSH
These products leave little particles in the surface of the steel and inevitably these particles begin rusting and staining the surface of the steel. They also can excessively scratch the surface of your stainless steel. *Stay completely away from steel wool and steel brushes.*

5. Do not assume it’s the cleaner. If you do have some spotting or staining, and you’ve followed all of the rules, it may not be the stainless steel cleaner. Water, especially hard water, can leave spotting and staining on stainless steel surfaces. Towel dry after rinsing can end the problem. Sometimes, even water is an enemy to stainless steel.

MAINTENANCE RECORD		
Date		**By**

TRAINING RECORD		
Date		By

WARRANTY

Mortech Manufacturing. Inc. warrants all fabrications to be free of defects due to its own workmanship and materials.

CONTINENTAL UNITED STATES:
Repair and/or replacement of parts furnished that may develop such defects, will be warranted for a period of one year parts replacement and 90 days labor from the date of shipment. Items not manufactured by Mortech Manufacturing will receive the manufacturer's warranty.

INTERNATIONAL:
(For validation of warranty, installation location (physical address) required) Replacement of parts furnished that may develop such defects, will be warranted for a period of (18) months from the date of shipment. Shipping and Labor is not warranted. Items not manufactured by Mortech Manufacturing. Inc. will receive the manufacturer's warranty.

PARTS AND SERVICE
Customer relations and product support are important aspects of Mortech Manufacturing. Inc.
For assistance with this or any of our fine products please contact us below:
Mortech Manufacturing. Inc.
411 North Aerojet Avenue
Azusa, CA 91702
TEL (626) 334-1471
FAX (626) 334-1704
www.mortechmfg.com
info@mortechmfg.com

© COPYRIGHT MORTECH MANUFACTURING. INC., ALL RIGHTS RESERVED.

CAUTION
• Inspect unit and all components for any loosening that may have occurred during shipping •

ATTENTION
All images and Drawing in this manual may not represent your model.
Refer to your particular project for exact specifications

DISCLAIMER
This manual contains general instructions for the use, operation, and care of this product. The instructions are not all inclusive. Safe and proper use of this product is solely at the discretion of the user. Safety information is included as a service to the user. All other safety measures taken by the user should be within and under consideration of applicable regulations. It is recommended that training on the proper use of this product be provided before using this product in and actual situation.

Retain this manual for future reference. Include it with the product in the event of transfer to new users. Additional free copies are available upon request from Customer Relations.

Mortech Manufacturing. Inc. has made every effort to ensure that this Manual is accurate; Mortech Manufacturing. Inc. abdicate liability for any inaccuracies or omissions that may have occurred.

Information in this Manual is subject to change without notice and does not represent a commitment on the part of Mortech Manufacturing. Inc. Mortech Manufacturing. Inc. assumes no responsibility for any inaccuracies that may be contained in this Manual. Mortech Manufacturing. Inc. makes no commitment to update or keep current the information in this Manual, and reserves the right to make improvements to this Manual and/or to the products described in this Manual, at any time without notice.

If you find information in this manual that is incorrect, misleading, or incomplete, we would appreciate your comments and suggestions.

PROPRIETARY NOTICE

The information in this manual is the property of Mortech Manufacturing. Inc. Mortech Manufacturing. Inc. reserves all patent rights, proprietary design rights, manufacturing rights, reproductions rights, and sales use rights thereto, and to any article disclosed therein except to the extent those rights are expressly granted to others or where not applicable to vendor proprietary parts.



SERIES M678-FP MANUAL FOOT PUMP OPERATION CADAVER LIFT

Dimensions

Width: ..... 30 in./76 cm.
Depth: ..... 48.375 in./123 cm.
Height: ..... 77.75 in./197 cm.
Load Capacity: ..... 1000 lbs./453 kg.

STANDARD DESIGN FEATURES

- Floor locks, safety screen, and foot guard are standard
- Front phenolic wheels are 5" diameter and static, rear phenolic swivel casters are 4" diameter

- Forks:1 in./2 cm. thick X 3 in./7 cm. wide X 30 in./76 cm. long
- Adjustable span up to 25 in./63 cm.
- 15 in./38 cm. load center
- Base leg span - 15 in./ 38 cm. inside, 21 in./53 cm. outside



M678-FP FOOT PUMP OPERATED CADAVER LIFT



M678



M678 BATTERY OPERATED HYDRAULIC CADAVER LIFT ADJUSTABLE

SERIES M678 HYDRAULIC CADAVER LIFT

The battery-operated hydraulic cadaver lift is designed with a narrow straddle which allows you to ease through congested work areas and narrow aisles. An expanded metal safety screen with reinforced edges provides operator protection. The hydraulic lift is powered by a heavy-duty 12V battery with a built-in 12A automatic tapering battery charger. The lift is equipped with floor protective 2 in./5 cm. diameter front-load phenolic wheels and a rear foot-controlled floor brake mechanism.



ROTACASTER OPTION AVAILABLE

Lifting Specifications

Max Height: ..... 61.375 in./156 cm.
(forks @ standard setting)
Min Height: ..... 23.875 in./61 cm.
(with forks reversed)
Max. Height: ..... 83.5 in./212 cm.
(with forks reversed)

OPTIONAL FEATURES

1. Front and side rolling caster for all-direction moving
2. Front 5" diameter phenolic wheel works with floor ramps

SERIES M678 HYDRAULIC CADAVER LIFT

411 North Aerojet Avenue
Azusa, CA 91702
www.mortechmfg.com

T(800) 410-0100
T(626) 334-1471
F(626) 334-1704

SIMPLE TO USE FINGER TIP CONTROLS



MODEL M678-SP HYDRAULIC CADAVER LIFT



SERIES M678-SP HYDRAULIC CADAVER LIFT FULLY POWERED SYSTEM

This battery powered system provides both propulsion and lift. Eliminates the stress and strain of lifting and transporting heavy loads. A simple hand control provides various/ variety of forward and reverse speeds.

STANDARD DESIGN FEATURES

- Variable speed, steerable power-drive system allows a single user to easily control forward and reverse movement of stacker
- Simple to use finger-tip controls are built into steering handle
- 180 degree hinged design allows precision steering in confined spaces
- Red emergency stop button
- Spring-loaded mechanism automatically compensates for uneven floors, ensuring drive wheels maintain constant contact with the floor
- Automatic emergency safety-switch instantly reverses direction if control post comes in contact with obstacle
- All other operating specifications are the same as equivalent power-lift-only models
- Two maintenance-free sealed batteries provide plenty of power for propulsion and lift

ROTACASTER OPTION AVAILABLE



T(800) 410-0100
T(626) 334-1471
F(626) 334-1704

411 North Aerojet Avenue
Azusa, CA 91702
www.mortechmfg.com

MODEL M600, M601, M601-SL CADAVER LIFT ACCESSORIES

Series M600 Roller Pallet Assembly

STANDARD DESIGN FEATURES

- All stainless steel construction
- 11 gauge tubing for heavy duty use
- 10 maintenance-free nylon rollers for easy transfer
- Can be used from either end for loading or unloading
- Flip style tray stops at each end with bumper protection
- A necessity for the Total Roll Cadaver System

M600



Model M600-SC Roller Pallet Scale Assembly

- (10) maintenance-free nylon rollers for easy transfer
- Can be used from either end for loading or unloading
- Full-functioning scale

M600 -SC





Series M601 Full Roller Pallet Assembly

- (5) maintenance-free conveyor rollers for easy transfer
- Can be used from either end for loading or unloading
- Flip-style tray stops at each end with bumper protection

M601



Model M601-SL Side Loading Roller Pallet Assembly

- (10) maintenance-free conveyor rollers for easy transfer
- Flip-style tray stops for outer side

M601-SL



Series M601-ES End/Side Loading Roller Pallet Assembly

STANDARD DESIGN FEATURES

- All stainless steel construction
- 11 gauge tubing for heavy duty use
- (5) Rows rota-rollers for easy transfer, utilizing both the front or side of the pallet

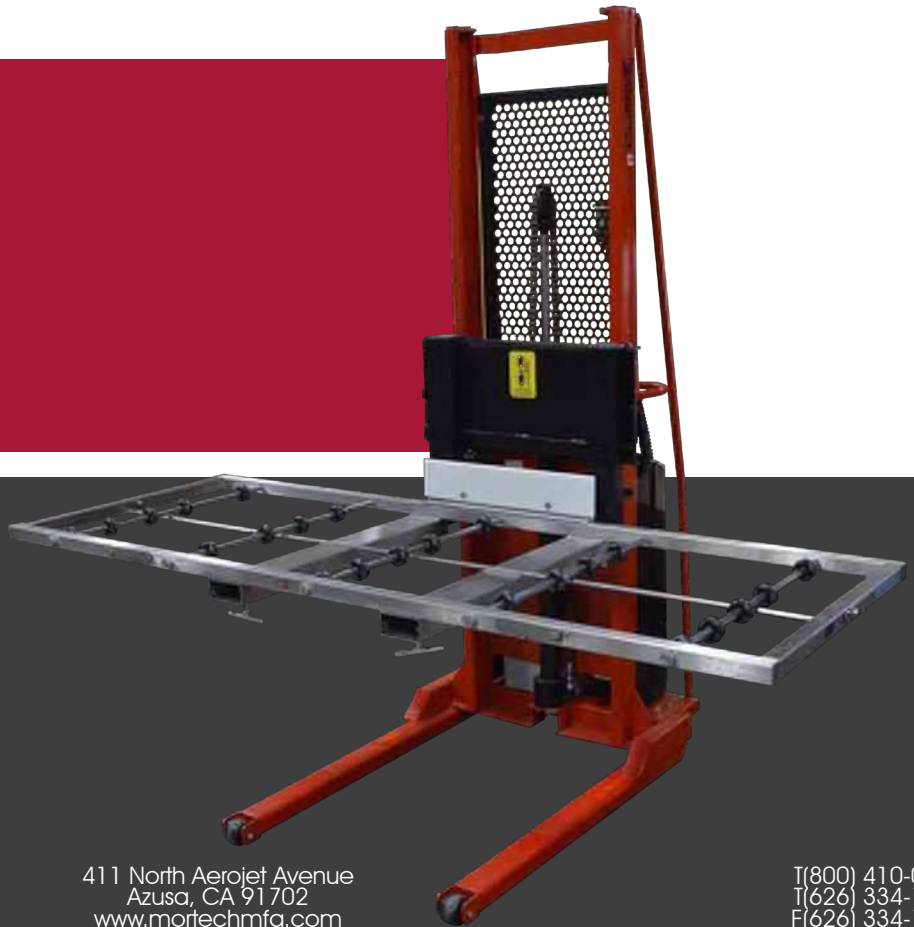

411 North Aerojet Avenue
Azusa, CA 91702
www.mortechmfg.com

T(800) 410-0100
T(626) 334-1471
F(626) 334-1704



Series M678 w/M604-H
Strap Tray Lift Assembly



MODEL M677 w/M604-C
Strap Tray Lift Assembly



Series M677 w/M605
Strap Body Lift Assembly

Model M604
Strap Tray Lift Assembly

STANDARD DESIGN FEATURES

- All stainless steel construction
- .120 thick tubing for heavy duty use
- (4) Sturdy strap supports
- Straps attach easily to T3626HS
- Fits any of our cadaver lifts

Model M605
Strap Body Lift Assembly

STANDARD DESIGN FEATURES

- All stainless steel construction
- .120 thick tubing for heavy duty use
- Rigid glide straps w/cable
- Straps slide easily under body
- Fits any of our cadaver lifts

M604 M605

MODEL M604, M605
CADAVER LIFT ACCESSORIES

T(800) 410-0100
T(626) 334-1471
F(626) 334-1704

411 North Aerojet Avenue
Azusa, CA 91702
www.mortechmfg.com



The carrier is designed for multi-purpose use in hospitals, coroner's facilities and mortuaries. The carrier is a durable and economical stainless steel body transporter.

STANDARD DESIGN FEATURES

Width: .....27 in./69 cm.
Length: .....73 in./185 cm.
Height: .....34 in./86 cm.
Design Load:.....400 lbs./181 kg.

- Vertical end rails fabricated from 1.5 in./4 cm. square stainless steel tubing, Cross rails fabricated from 1 in./2.5 cm. square stainless steel tubing, .12 tubing thickness, 304 stainless steel tubing
- Top tray is bolted to lower frame to allow for removal, yet remains sturdy while in use, fabricated from 16 gauge stainless steel
- Heliarc welded for added strength and durability
- 8 in./20 cm. casters, all with brake mechanism
- Heavy-duty rubber bumper at each corner

OPTIONAL FEATURES

- Total caster locking system
- Custom tray sizes
- Full side bumpers
- Custom working heights

MODELS AVAILABLE

600010-TL total locking caster system
600010-C crank carrier with synchronized elevation (Adjustable up 11 in./28 cm)
600010-H carrier with hydraulic front & rear elevation (Adjustable up 13 in./33 cm)

All measurements are inches/centimeters

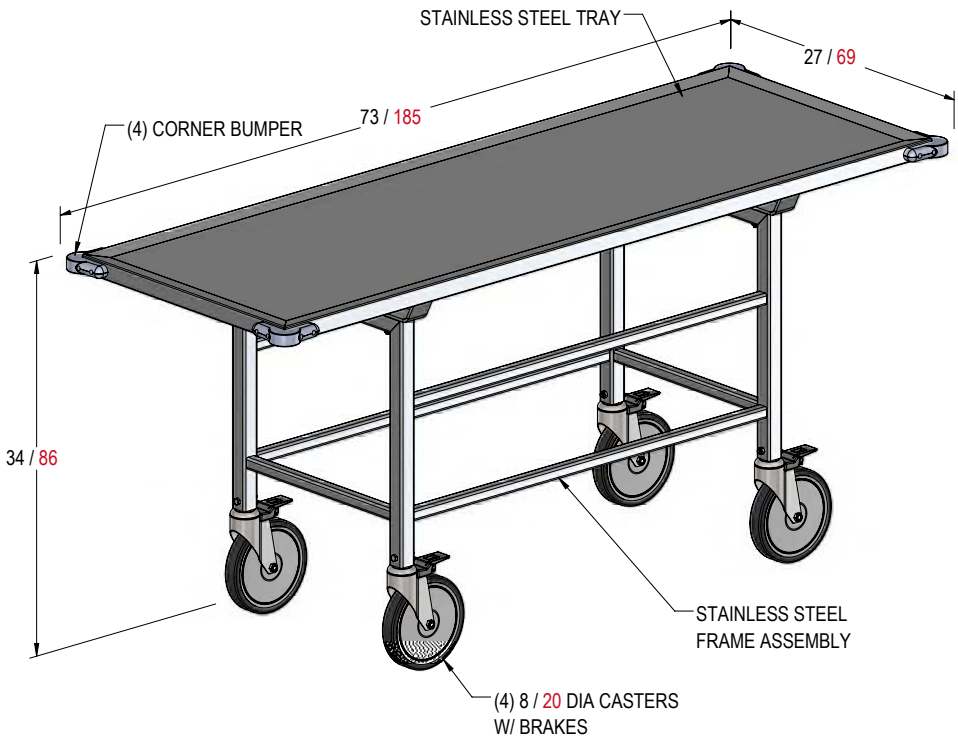

MODEL 600010
STRETCHER/CADAVER CARRIER

411 North Aerojet Avenue
Azusa, CA 91702
www.mortechmfg.com

T(800) 410-0100
T(626) 334-1471
F(626) 334-1704



600010-TL



600010-C



600010-H

SERIES 600010
STRETCHER/CADAVER CARRIER

T(800) 410-0100
T(626) 334-1471
F(626) 334-1704

411 North Aerojet Avenue
Azusa, CA 91702
www.mortechmfg.com

TOTAL LOCKING MECHANISM

Enables the carrier with ***"ONE LOCATION"*** locking to all casters, ***"ONE LOCATION"*** directional locking to assist in the steering of the carrier and ***"ONE LOCATION"*** locking release or neutral position.



TOTAL LOCKING POSITION



STEERING LOCKED POSITION



UNLOCKED -NEUTRAL POSITION

600010-TL

The carrier is designed for multi-purpose use in hospitals, coroner's facilities and mortuaries. The carrier is an economical and reliable stainless steel body transporter. It includes our total locking caster system. It will enable the carrier to lock all casters, and for a directional locking to assist in the steering of the carrier.

600010-C

Multi-functional carrier designed for hospitals, coroner's facilities and mortuaries. The carrier is a durable and economical stainless steel adjustable height body transporter.

600010-H

The carrier is designed for multi-purpose use in hospitals, coroner's facilities and mortuaries. It includes our total locking caster system. It will enable the carrier to lock all caster, and for a directional locking to assist in the steering of the carrier. This adjustable height body transporter can vary in elevation and tilt of the body tray.

OPTIONAL FEATURES

- Custom tray sizes
- Full side bumpers
- Custom working heights

3278b



Model 102
Folding Operating Table

The Model 102 Folding Operating Table is a true combination table, ideal for embalming, dressing and transferring. An exclusive, one-hand release easily adjusts either end of the table from 32½" to 38½" with the ends being independently adjustable. The table is constructed of a stainless steel top with a convex surface, tubular aluminum frame, and 6" wheels with ball bearings. The swivel wheels lock to keep the table stationary while in use. The drain, located in the center of the foot end, quickly eliminates fluid from the table. The Model 102 folds for storage when not in use and can stand on one end for storage behind a door or in a closet.

Model 102 Folding Operating Table ..... #0661020



Adjustable Height



Folds for Storage



38-BB Body Bridge
#0695790



Side Extension Panels (SEP)
SEP (each) #0695796

SPECIFICATIONS

	Length	Width	Height Max.	Height Min.	Wheelbase	Weight	Load Limit
Model 102	80"	30"	38¾"	32¾"	64"x27¼"	87 lb	1000 lb
	(205 cm)	(77 cm)	(98 cm)	(83 cm)	(163x69 cm)	(39½ kg)	(454 kg)

C-80BAJ-(AD)DS

Self-Contained Cubelet Ice Machine with Built-In Storage Bin

Item #: 3305
Project: CNH/OSU-TAHLEQUAH
Qty:
AIA#:

W x D x H

C-80BAJ / C-80BAJ-DS
14 7/8" x 22 5/8" x 33 1/2"
Shipping Dimensions 20 3/4" x 30 1/2" x 40"

C-80BAJ-AD / C-80BAJ-ADDS
14 7/8" x 22 5/8" x 31 1/2"
Shipping Dimensions 20 3/4" x 30 1/2" x 38"

* not including handle

(-AD) - ADA Compliant

(-DS) - Customized Cabinet Door System

<<<NOTE: ADA MODEL IS 31.5" H



C-80BAJ
Air-Cooled
(Shown)

C-80BAJ-AD
Air-Cooled
ADA Compliant Unit



C-80BAJ-DS*
with Custom Cabinetry
(Shown)

C-80BAJ-ADDS*
Air-Cooled
ADA Compliant Unit
**Customer responsible for providing cabinetry*

FACTORY Parts & Labor 2 YR Entire Machine WARRANTY

Features

- **Full length stainless steel door handle**
- **UL approved for outdoor use**
- **Undercounter design**

- Up to 80 lbs. of ice production per 24 hours
- Up to 22 lbs. of built-in storage capacity
- Power switch accessible without panel removal
- Less than 34 inches tall (C-80BAJ, C-80BAJ-DS)
- Less than 32 inches tall; ADA Compliant (C-80BAJ-AD, C-80BAJ-ADDS)
- Easily disassembled water circuit for easy cleaning
- Front in and out airflow
- Equipped with 6 ft. Cord with NEMA 5-15 Plug
- R-134A Refrigerant

Warranty:
2 Year Parts & Labor on entire machine.
1 Year Parts & Labor on HS-5061 Drain Pump Assembly.
Valid in United States, Canada, Puerto Rico and U.S. Territories. Contact factory for warranty in other countries.

		ICE PRODUCTION		WATER USAGE		ELECTRICAL						
Condenser	Model	Air / Water Temp Lbs. per 24 hours 70°/ 50°F	90°/ 70°F	Potable Gal. per 100 lbs. 90°/ 70°F	Condenser Gal. per 100 lbs. 90°/ 70°F	kWh Used per 100 lbs. 90°/ 70°F	Max. Fuse Sz or HACR Circuit Bkr	Amperage	Voltage	Heat Rejection BTU/hr.	Refrigerant Charge Amount	Net / Ship Weight (lbs.)
Air	C-80BAJ(-DS)	80	45	12.0	N/A	17.3	15A	4.0A	115V/60/1	1,850	3.92 oz	118 / 130
Air	C-80BAJ-AD(-DS)	80	45	12.0	N/A	17.3	15A	4.0A	115V/60/1	1,850	3.92 oz	118 / 130

Mini Cubelet Dimensions*

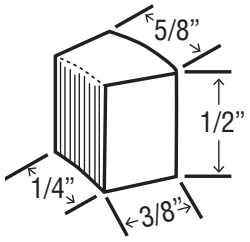

* approximate size in inches, image not to scale

Operating Limits

- Ambient Temp Range 45 - 100°F
- Water Temp Range 45 - 90°F
- Water Pressure 7 - 113 PSIG
- Voltage Range 104-127V

Service

- Allow enough clearance at rear for water and drain connections with 15" (38 cm) clearance in the front.
- Location must provide a firm and level foundation.
- Do not place near ovens, grills or other high heat producing equipment.

Parts

- Optional Side Trim Kit: HS-0182
- Optional Top Trim Kit: HS-2133
- Optioinal Drain Pump Assembly: HS-5061
- Water filter: H9320-51

Plumbing

- Icemaker Water Supply Line: Minimum 1/4" Nominal ID Copper Water Tubing or Equivalent
- Icemaker Drain Line: Minimum 1/2" Nominal ID Hard Pipe or Equivalent

Water Filter

Please refer to water filter spec sheet for recommended configurations.

Printed in the U.S.A.

Hoshizaki reserves the right to change specifications without notice.

C-80BAJ-(AD)DS

Self-Contained Cubelet Ice Machine with Built-In Storage Bin

mm
[inch]

FRONT VIEW

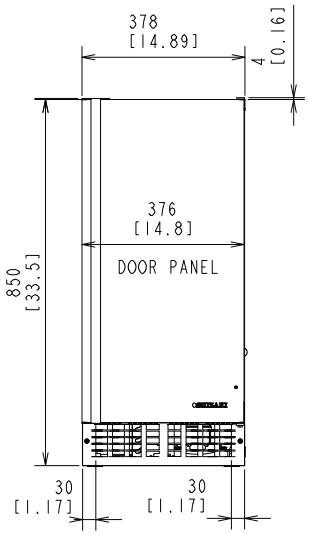

C-80BAJ*

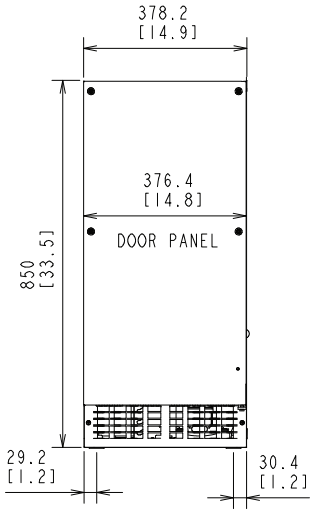

C-80BAJ-DS*

* -AD models have height ot 31.5”

REAR VIEW

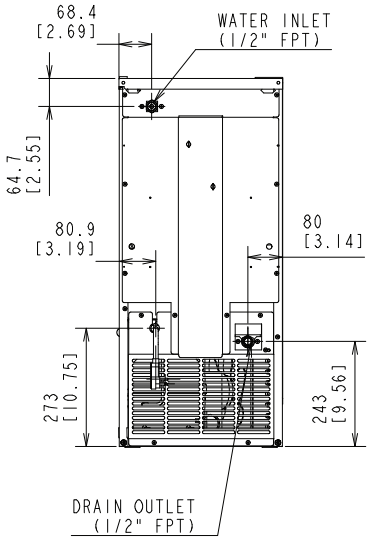

C-80BAJ(-DS)*

* -AD models have height ot 31.5”

SIDE VIEW

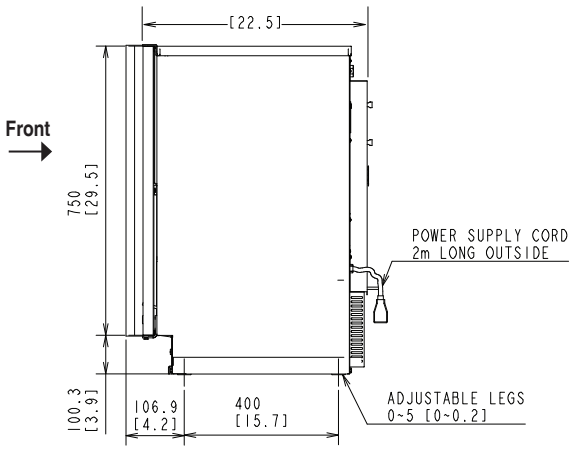

C-80BAJ*

* -AD models have height ot 31.5”

TOP VIEW

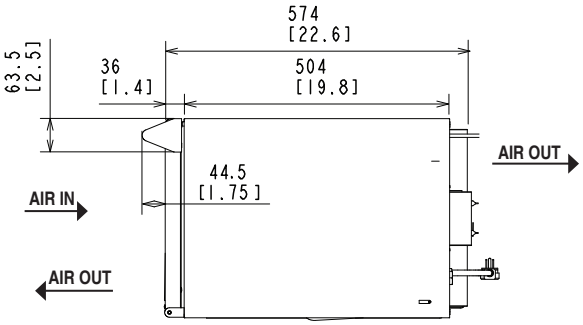

C-80BAJ*

SUMMIT

AL54CSSTB



32" x 23.63" x 22.63" (H x W x D)

Built-in undercounter ADA compliant all-refrigerator with wrapped stainless steel exterior, towel bar handle, door storage, and digital controls

Highlights:

32" height fits under lower ADA compliant counters

Flexible design allows built-in or freestanding use in 24" wide spaces

Stainless steel wrapped cabinet and door with professional handle for a deluxe appearance with lasting durability

Product Features:

ADA compliant design	32" height allows easy installation under lower ADA compliant counters
Built-in capable	Front-breathing design lets you make the best use of space by installing your appliance under the counter
Wrapped stainless steel exterior	Cabinet and door feature stainless steel construction for a luxury look built to last
Professional towel bar handle	Curved handle in brushed stainless steel offers a sturdy grip with professional elegance
Factory installed lock	Keyed lock offers added security
Frost-free operation	No-frost operation for minimum user maintenance
Digital thermostat	Electronic controls located inside the unit for precise temperature management
Recessed LED light	Efficient and attractive presentation with LED lighting
Adjustable glass shelves	Rearrange refrigerator space to accommodate all sizes or remove shelves for simple cleanup

SUMMIT

AL54CSSTB Specifications:

Overview	
Height of Cabinet	32.0" (81 cm)
Width	23.63" (60 cm)
Depth	22.63" (57 cm)
Capacity	4.8 cu.ft. (136 L)
Defrost Type	Frost-Free
Door	Stainless Steel
Cabinet	Stainless Steel
US Electrical Safety	ETL
Canadian Electrical Safety	ETL-C
Sanitation	ETL-S
Energy Usage/Year	250.0kWh/year
Amps	1.0
Voltage/Frequency	115 V AC/60 Hz
Weight	110.0 lbs. (50 kg)
Shipping Weight	115.0 lbs. (52 kg)
Parts & Labor Warranty	1 Year
Compressor Warranty	5 Years
Refrigerator Features	
Sabbath Mode	Yes
Door Swing	RHD
Reversible	Factory Reversible
Shelf Type	Glass
Shelf Qty	3
Full Door Shelf Qty	2
Adjustable Shelves	Yes
Thermostat Type	Digital
Fan Type	Interior and Exterior
Refrigerant Type	R600a
Refrigerant Amount	0.99oz.
High Side PSI	270.0
Low Side PSI	105.0
Level Legs Qty	4
Interior Light	Yes
Temperature Range	36 to 43ºF
Dimensions	
Interior Height	25.0" (64 cm)
Interior Width	20.0" (51 cm)
Interior Depth	17.5" (44 cm)
Compressor Step Height	3.25" (8 cm)
Compressor Step Width	20.0" (51 cm)
Compressor Step Depth	5.25" (13 cm)



SUMMIT APPLIANCE DIVISION, FELIX STORCH, INC. | ISO 9001:2015 Certified
770 Garrison Avenue Bronx, NY 10474 USA **TEL** 718-893-3900 **FAX** 844-478-8799 info@summitappliance.com **www.summitappliance.com**

Scotsman™

NME454 – 400 lb Nugget Ice Machine

NME454 – 400 lb Nugget Ice Machine

Modular Nugget Ice Machine with *AutoSentry*™

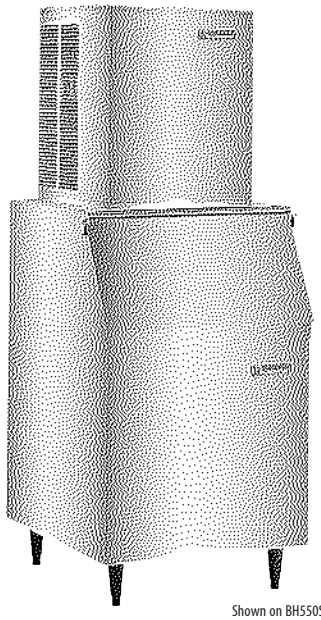

Shown on BH550S-C bin.

Key Advantages

AutoSentry™ Monitoring System constantly checks workload on gearbox shutting down system before a problem develops preventing costly repairs.

Electrical conductivity water sensor eliminates low or no water failures and cannot be affected by adverse water conditions.

Plastic drain pan with larger outlet provides greater ability to quickly channel water away preventing particulate build-up and rust.

Rust and restriction free drain system features one-piece plastic drain tubes with larger ID for obstruction-free water flow.

Durable, high grade stainless steel construction with massive, self-aligning spherical roller bearings; patented double-flight auger that evenly distributes the load; and heavy duty direct drive gearbox for high reliability and long life.

24 Hour Volume Production

Air Cooled		
70°F/21°C 50°F/10°C lb/kg	Air Water	90°F/32°C 70°F/21°C lb/kg
460/209		370/168

Water Cooled		
70°F/21°C 50°F/10°C lb/kg	Air Water	90°F/32°C 70°F/21°C lb/kg
510/232		420/191

Modular Bin Options

Model Number	Dimensions W" x D" x H"	ARI Certified Bin Capacity lb/kg	Application Capacity lb/kg	Finish	Ship Weight lb/kg
HTB250-H*	30 x 31.5 x 22.5	190/86	250/113	Poly	80/36
HTB350-H*	30 x 31.5 x 29.5	250/113	350/159	Poly	90/41
HTB555-H*	30 x 34.5 x 44.5	420/190	535/243	Poly	110/50
BH550S-C*	30 x 31.5 x 44	410/186	520/236	SS	140/64
BH801S-A*	42 x 31.5 x 44	580/263	740/336	SS	165/75
BH900S-C*	48.2 x 33.75 x 44	740/336	940/426	SS	200/91

*See price list for Bin Top.



Bin: HTB350-H



Bin: HTB555-H

Nugget Ice



The Original Chewable Ice™! Cools drinks rapidly without foaming. Used in fountain beverages.

Warranty

- 3 years parts and labor on all components.
- 5 years parts on the compressor.

Warranty valid in North, South & Central America. Contact factory for warranty in other regions.

Scotsman Ice Systems
775 Corporate Woods Parkway
Vernon Hills, IL 60061

1-800-SCOTSMAN
Fax: 847-913-9844
E-mail: customer.service@scotsman-ice.com

www.scotsman-ice.com

Enodis

Scotsman™
The Smart Choice in Ice.™

NME454 – 400 lb Nugget Ice Machine

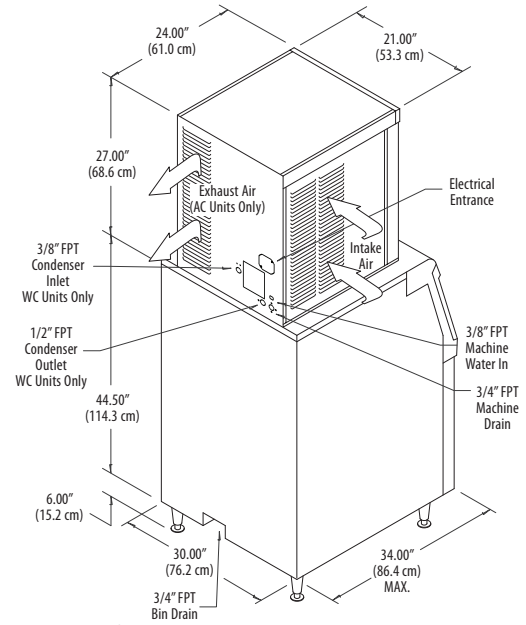

NME454 on HTB555-H bin.

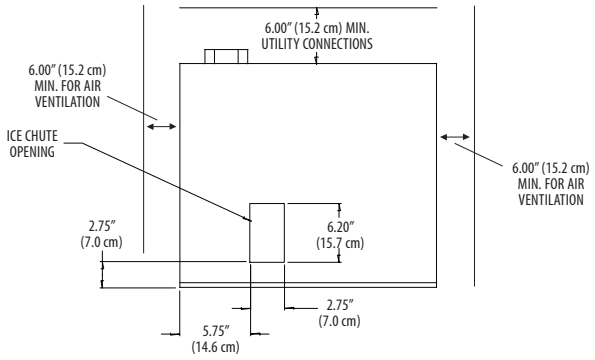

21" Nugget plan view.

Specifications

Model Number	Condenser Unit	Basic Electrical Volts/Hz/Phase	Max. Fuse Size or HACR Circuit Breaker (amps)	Circuit Wires	Min. Circuit Ampacity	Energy Consumption kWh/100 lb (45.4 kg) 90˚F(32˚C)/70˚F(21˚C)	Water Usage Gallons/100 lb (liters/45.4 kg) Potable 90˚F(32˚C)/ 70˚F(21˚C)	Water Usage Gallons/100 lb (liters/45.4 kg) Condenser 90˚F(32˚C)/ 70˚F(21˚C)
NME454AS-1A	Air	115/60/1	20	2	15.75	5.2	12.0/45.5	-
NME454WS-1B	Water	115/60/1	20	2	14.35	4.2	12.0/45.5	71.2/269.8

All Models

Dimensions (W x D x H):

Unit:
21" x 24" x 27"
(53.3 x 61.0 x 68.6 cm)

Shipping Carton:
28" x 25" x 32"
(71.1 x 63.5 x 81.3 cm)

Shipping Weight:
205 lb/93 kg

BTUs per hour:
5,600

Accessories

Model Number	Description

* Scotsman recommends all ice machines have water filtration. See Scotsman Sanitation Matrix for details.

Operating Requirements

	Minimum	Maximum
Air Temperatures	50°F (10°C)	100°F (38°C)
Water Temperatures	40°F (4.4°C)	100°F (38°C)
Remote Cond. Temps	-20°F (-29°C)	120°F (49°C)
Water Pressures	20 PSIG (1.4 bar)	120 PSIG (8.3 bar)
Electrical Voltage	-5%	+10%

Specifications and design are subject to change without notice.

Scotsman Ice Systems
775 Corporate Woods Parkway
Vernon Hills, IL 60061

1-800-SCOTSMAN
Fax: 847-913-9844
E-mail: customer.service@scotsman-ice.com

www.scotsman-ice.com

Enodis

© 2007 Scotsman Ice Systems.

Scotsman

B222S, B322S, B330P, B530P/S, B842S, B948S – Storage Bins

Modular Storage Bins



B530S shown with optional KLP8S legs

Features

New sleek, contemporary styling. A perfect match to Prodigy cube ice machines and other Scotsman ice machines.

Convenient, built-in scoop holder.

Easily removable baffle, no tools required for cleaning.

Unique recessed drain fitting for maximum installation flexibility.

Spring loaded door with hidden hinges for easy opening and closing.

Available in stainless steel or durable rotocast plastic.

ARI, NSF approved.

Storage Capacity

B222S		B322S		B330P	
APPLICATION	ARI	APPLICATION	ARI	APPLICATION	ARI
242/110	190/86	370/168	290/132	344/156	270/123

B530P/S		B842S		B948S	
APPLICATION	ARI	APPLICATION	ARI	APPLICATION	ARI
536/244	420/191	778/353	610/277	893/406	700/319

ARI PERFORMANCE CERTIFIED ™ ARI Standard 820 Ice Storage Bin www.ahridirectory.org

NSF

Polyurethane Insulation

Foam insulation is forced between the wall and liner under heat and pressure to form a perfect wall to wall bond, preserving ice supply for long periods.

Bin Interior

The polyethylene bin interior is sanitary and easy to clean. Resists scratches and scuffs from ice scoops.

Warranty

• 3 years parts and labor on all components.

Warranty valid in North, South & Central America. Contact factory for warranty in other regions.

Scotsman Ice Systems
775 Corporate Woods Parkway
Vernon Hills, IL 60061

1-800-SCOTSMAN
Fax: 847-913-9844
E-mail: customer.service@scotsman-ice.com

www.scotsman-ice.com

Enodis

Scotsman
The Smart Choice in Ice.™

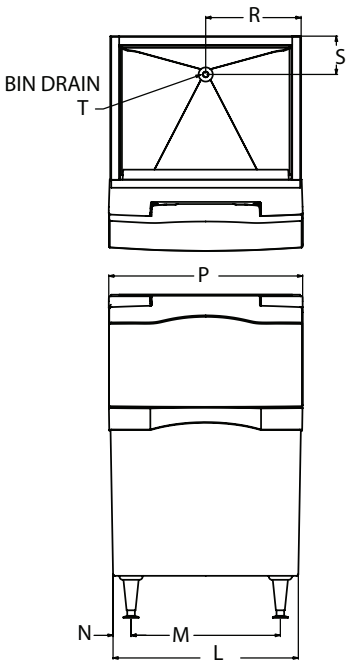

Installation Note: Allow 6" space at back for utility connections.

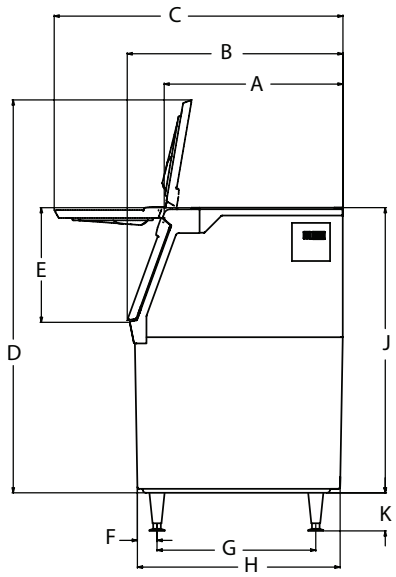

Dimensions

Model #	A	B	C	D	E	F	G	H	J	K	L	M	N	P	R	S	T
B222S	28.23	34	45.5	47.24	18	3.88	25	32.75	31	6	22	15.5	3.25	22.5	11	6	.75 NPT
B322S	28.23	34	45.5	61.24	18	3.88	25	32.75	44	6	22	15.5	3.25	22.5	11	6	.75 NPT
B330P	28.15	34	45.5	47.24	18	3.33	25	32.42	31	6	30	23.5	3.08	30.5	15	6	.75 NPT
B530P/S	28.15	34	45.5	61.24	18	3.09	25	31.93	45	6	30	23.5	2.83	30.5	15	6	.75 NPT
B842S	28.07	34	45.5	61.87	18	3.88	25	32.75	44	6	42	35.5	3.25	42.5	21	6	.75 NPT
B948S	28.05	34	45.5	61.24	18	3.88	25	32.75	44	6	48	41.5	3.25	48.5	24	6	.75 NPT

Finish: S = Stainless Steel, P = Poly

Shipping

Model #	Carton	Weight
B222S	24" x 36" x 35"	120
B322S	24" x 36" x 47"	140
B330P	32" x 36" x 33"	90
B530P/S	32" x 36" x 47"	110 / 150
B842S	44" x 36" x 47"	185
B948S	50" x 36" x 47"	220

Accessories

Model #	Description
KBC1	Kit, Bin Casters for B530S, B842S, B948S & SB380.* Not for use with B222S, B322S or SB480 when using extensions.
KBC1P	Kit, Bin Casters for B330P & B530P.*
KLP7	Kit, Legs, 6", Flanged Feet, For B Bins, HD Dispensers, AFE, CU1/2/3 & NSE.
KLP8S	Kit, legs, 6", Stainless Steel, For B Bins, HD Dispensers, AFE, CU1/2/3 & NSE.
BGS10	Bagger, Hooks on Any Bin.
KBAG	Kit, Bags, 1000, For BGS10.
KSEALER	Kit, Tape Sealer, For BGS10.
KTAPE	Kit, Tape, 180 ft. Roll, For BGS10.
KHOLDER	Kit, Scoop Holder, Stainless Steel.

* 3.5" Diameter, 2 Locking, Raises Bin 4.5".

Operating Requirements

	Minimum	Maximum
Air Temperatures	50°F (10°C)	100°F (38°C)
Water Temperatures	40°F (4.4°C)	100°F (38°C)
Remote Cond. Temps	-20°F (-29°C)	120°F (49°C)
Water Pressures	20 PSIG (1.4 bar)	80 PSIG (5.5 bar)
Electrical Voltage	-10%	+10%

Specifications and design are subject to change without notice.

Scotsman Ice Systems
775 Corporate Woods Parkway
Vernon Hills, IL 60061

1-800-SCOTSMAN
Fax: 847-913-9844
E-mail: customer.service@scotsman-ice.com

www.scotsman-ice.com

Enodis

© 2008 Scotsman Ice Systems.

Imbera
Beyond Cooling

Establishing a NEW STANDARD in the commercial refrigeration industry

VRD-21

This high energy efficient two door cooler was designed to attract customer's attention at the point of purchase.



KEY FEATURES



ELECTRONIC TEMPERATURE CONTROLLER:
Our standard controller maintains temperature efficiently based on surrounding conditions, self adjusting to the right temperature for your products. EMS available for coolers above 250 lts.



ELECTRONIC FAN MOTORS:
Electronic fan motors allow better performance, using only a fraction of the energy required by a shaded pole motor.



LOW MAINTENANCE CONDENSER:
Our models are designed with low maintenance condenser systems preventing dust from blocking air flow and thus saving energy and increasing compressor´s life.



HIGH EFFICIENCY GLASS DOORS:
"Low-e" double panel argon gas filled glass-pack with an extruded insulated plastic frame, making this door the most energy efficient in its category.



LED PERIMETER LIGHTING:
LED lighting system, uses a portion of the energy of regular fluorescent lights, and need no replacement for seven years.



CYCLOPENTANE INSULATION:
CFC and HFC free Cyclopentane foam is eco-friendly and a high efficiency insulator.



PLASTIC FRONT GRILL:
Its differentiated and modern design provides superior impact resistance and is easy to remove for condenser maintenance.



STEEL EXTERIOR:
Heavy duty 24 gauge pre-painted steel exterior provides years of durability and the highest quality painted finish available today.

HI SPEC LINE

VRD-21

TECHNICAL SPECIFICATIONS		
External dimensions	H: 57 1/8"	1452 mm
	W: 40 1/8"	1020 mm
	D: 24 1/2"	622 mm
Internal dimensions	H: 43 5/8"	1108 mm
	W: 36 1/8"	919 mm
	D: 16 3/4"	423 mm
Weight	Gross: 246.9 lb	112 kg
	Crated:253.9 lb	115.2 kg
Capacity	16.8 ft3	475.8 lts
Trailer load	53´: 44	
Doors	2	
Shelves	4	
20 oz bottle capacity	Flat shelves: 220	
	Gravity feed: 220	
	Front facing: 11	
12 oz can capacity	Total: 264	

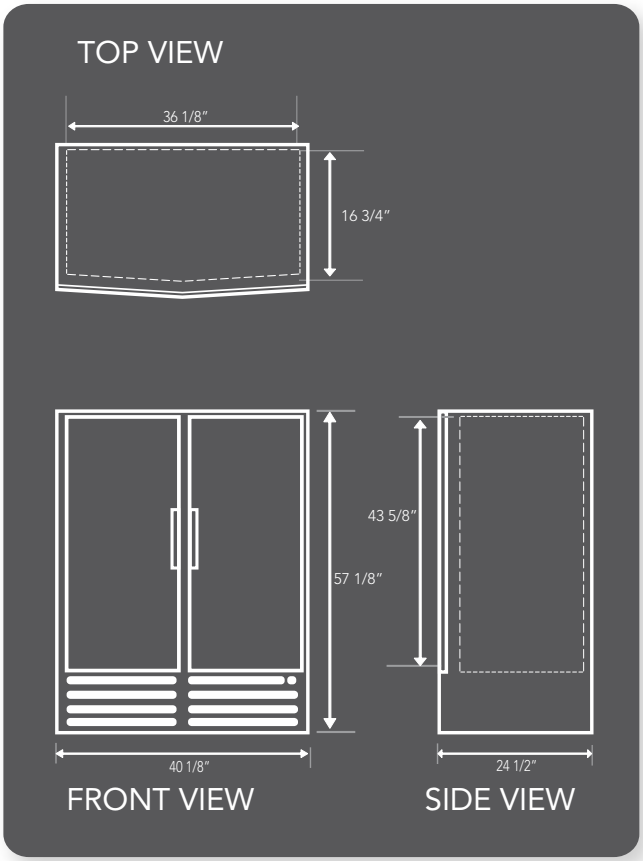

REFRIGERATION DATA	
Energy consumption	4.66 Kwh/24h*
Refrigerant	R-134a
Compresor	1/6 hp
Evaporator	Forced air
Temp. range	32 °F to 44,6 °F

ELECTRICAL DATA		
Amps	3.8 A	
Voltage	115 V	
Lighting	LEDs	
Cord length	120"	3048 mm
Plug type	NEMA 5-15P	



*Based on TCCC standard in its C condition.
Metric dimensions rounded up to the nearest inch and millimeter.
Specifications subject to change without notice.

Imbera USA L.L.C.
www.imbera.mx

303 Perimeter Center North Suite 300 Atlanta, GA 30346
Ph: +1 (678) 690 8454 Fax: +1 (678) 690 8455

WARRANTY
Two years limited warranty on all parts and labor, an additional 4 year warranty on compressor. (USA and Canada only)

3333

Imbera VRD43 HC BLACK

ESTABLISHING A **NEW STANDARD** IN THE COMMERCIAL REFRIGERATION INDUSTRY.

Energy efficient, environmentally friendly, featuring spark-free components, low refrigerant charge and the most attractive product display.



KEY FEATURES



• Eco-Friendly HC Natural Refrigerant
New R290 HFC-free refrigerant gas that reduces environmental impact and increases efficiency.



• Electronic Temperature Controller
Patented ETC1H electronic controller assures optimal refrigeration performance through precision temperature control, and intelligent control for defrost cycle, compressor & other component functions.



• Electronic Fan Motors
Enhances performance and efficiency. Uses only a fraction of the energy and offers longer life expectancy than industry standard shaded-pole motors.



• Newly Designed Condenser
New condenser featuring a joints reduction down to zero increasing long term refrigeration reliability and safeguarding against any system leaks.



• LED Efficiency +220 LUX Minimum Output
New 5th generation constant power ulta-high efficiency LED uses lowest energy possible, with highest light output.



• Spark-Free Refrigeration Components
All HC models will have spark free refrigeration components for optimal safety, per UL requirements.

CERTIFICATIONS

ENERGY STAR

c UL us LISTED
COMMERCIAL REFRIGERATOR AND/OR FREEZER
9Z42

CLASSIFIED UL EPH
NSF/ANSI 7 COMMERCIAL REFRIGERATOR AND/OR FREEZER
20YY

DOE 2017

IMBERA FOODSERVICE | 1293 N. Post Oak Road, Suite 100, Houston, TX 77055
Ph: 678 - 504 - 6835 | **info@imberafoodservice.com**

3333

Imbera VRD43 HC BLACK

ESTABLISHING A **NEW STANDARD** IN THE COMMERCIAL REFRIGERATION INDUSTRY.

PRODUCT VIEWS

Dimensions rounded up to the nearest inch or millimeter. Specifications subject to change without notice.

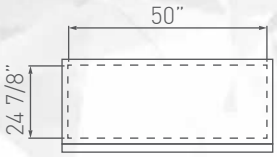

TOP VIEW

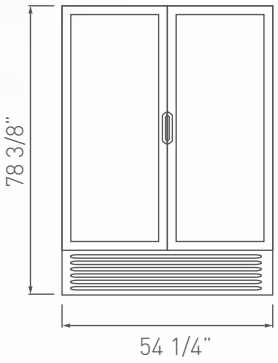

FRONT VIEW

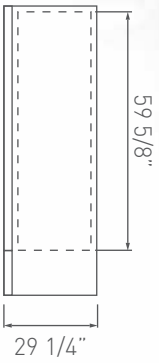

SIDE VIEW

EXTRA OPTIONS



Stainless Steel Door Frame Options available



Interior merchandising options incluide gravity kits, Sandwich Trays and freezer baskets



Casters and Legs Available



Lock options with different capabilities available

Customer Service: 866-548-5770 | WWW.IMBERAFOODSERVICE.COM

Three year limited warranty is included on all parts and labor. An additional two year warranty is issued on the compressor (USA & Canada only).

Operators must follow installation and operational guidelines per Imbera Users Manual and each cooler must have its own power supply, or warranty will be void.

TECHNICAL SPECIFICATIONS

Exterior Dimensions			Interior Dimensions		
H:	78 5/8"	1997 mm	H:	59 5/8"	1515mm
W:	54 1/8"	1375 mm	W:	50"	1270 mm
D:	29 3/4"	756 mm	D:	24 7/8"	633 mm

Usable Interior Capacity			Usable Volume
H:	53 1/4"	1355 mm	41.66 ft^3
W:	50"	1270 mm	1180 lts
D:	24 7/8"	633 mm	

Capacity 20 oz. Bottle	Doors	Doors Construction
Flat: 560	2	Standard Black Plastic Frame

Shelves	Shelf Size & Guage		
	W:	24 1/4"	615 mm
10	**D:**	19 3/4"	501 mm

REFRIGERATION PERFORMANCE DATA

Refrigerant R290	Energy Consumption
3.52 oz	3.290 kWh/day*

Compressor Power	Condenser
3/4 HP	Finless

Evaporator	Thermostat Setting Default	Cut-Out	Cut-In
Dynamic		32°F (0°C)	44.6°F (7°C)

Noise
54.50 dB

ELECTRICAL DATA

Power Supply	AMPS	Cord Length	Lighting
115v 60 Hz	8.7 kWh/day	118" 3000mm	411.80 Lux output 18 modules 8 LED per module

Plug Type	Controller
PC-731	Imbera ETC1H controller Pre-programmed temperatures

LOGISTIC DATA

Trailer Loads		Unit Weight w/packaging	Dimensions w/packaging		
53':	30	501.8 Lbs	H:	82 1/2"	2097 mm
40':	24	227.6 kg	W:	56 1/2"	1432 mm
			D:	31 3/8"	798 mm

*Energy consumption based on ANSI/ASHRAE Standard 72-2005.

BMAD System (Low maintenance high performance).
Dimensions rounded up to the nearest inch or millimeter.
Specifications subject to change without notice.

VALPRO COMMERCIAL REFRIGERATION
5256 Eagle Trail Drive
Tampa, FL 33634
813-502-0300
Toll Free 1-888-VALPRO-8
www.ValproRefrigeration.com
sales@ValproRefrigeration.com

PROJECT:	
MODEL #:	
ITEM #:	QTY:
AVAILABLE W/H:	
APPROVAL:	

GLASS DOOR MERCHANDISER

MODEL: VP1F-23

SWING DOOR FREEZER

Valpro glass door merchandisers can be manufactured to your specifications with options for black or white exterior, slide or swing doors, custom illuminated sign panels and side wall decals. Our line of merchandisers utilize reliable energy efficient technology and provide an attractive well illuminated point of purchase while maintaining precise temperatures. All units feature an oversized balanced refrigeration system allowing rapid cooling, and better reliability. All our merchandisers are UL Energy Verified and deliver the lowest operating costs. All Valpro products are manufactured under strict ISO9001 standards for quality assurance, and to consistently deliver to our customers products that satisfy all expectations. All our products are operated, extensively monitored, and undergo rigorous inspection prior to packaging and shipping.

FEATURES

- Energy saving vacuum-insulated triple pane low E-glass door
- Bright LED full door length internal cabinet lighting
- Bright LED back-lit front panel
- Standard door locks for added security
- Self-closing door
- Snap-in magnetic door gaskets removable and replaceable without tools for ease of cleaning
- Powder coated steel exterior and interior
- Stainless Steel interior bottom
- Four heavy duty wire shelves supported by pilasters for easy adjustability', 1/2" increments
- Four 1" wheels with front leg levelers
- High density foamed in-place CFC free polyurethane insulation
- Front mounted electronic thermostat digitally controlled temperature system maintains optimum temperature with easily viewed LED display
- Removable bottom grill slide-out condensing unit for easy maintenance
- Self contained oversized balanced refrigeration system provides better reliability and performance
- UL Energy Verified and tested to NSF Standard 7



WARRANTY
2 YEAR Parts & Labor
5 YEAR Compressor

Energy Verified

Model:

VP1F-23

Glass Door Merchandiser Freezer

One Section - Swing Door - 23 cu. ft. Capacity

Technical Data

Dimensional Data

Exterior Dimensions	26.8”W x 31.9”D x 79.5”H
Interior Dimensions	23”W x 30”D x 55.5”H
Net Storage Capacity	23 cu. ft.
Net Weight	302 lbs.
Crated Weight	352 lbs.
Shipping Dimensions	28.3”W x 34.8”D x 84.6”H

Refrigeration Data

Temperature Range	-10°F to +10°F
Refrigerant	R-404A
Refrigerating System	Capillary Tube
Temperature Controller	Digital
Horsepower	5/8

Construction Data

Exterior Material	Powder Coated Steel
Interior Floor Material	304 Series Stainless Steel
Interior Wall Material	White Powder Coated Steel
Insulation	CFC Free Polyurethane
Shelves	4 Heavy Duty Epoxy Coated

Electrical Data

Amps	11
Voltage/Frequency/Phase	115V/60Hz/1
Plug Type	NEMA 5-15P
Electrical Cord Length	10 ft.

FRONT VIEW

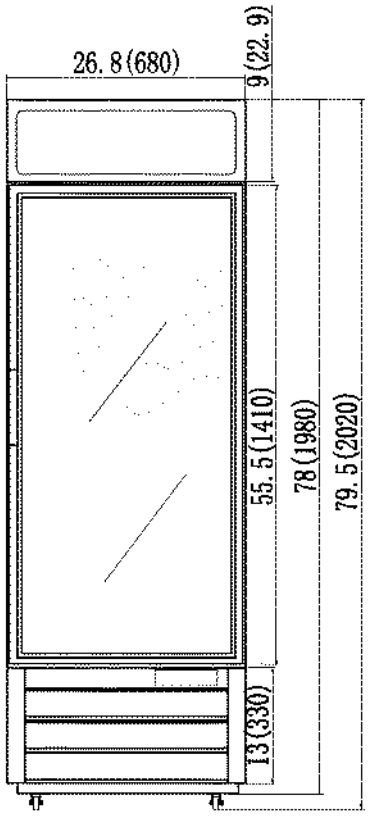

SIDE VIEW

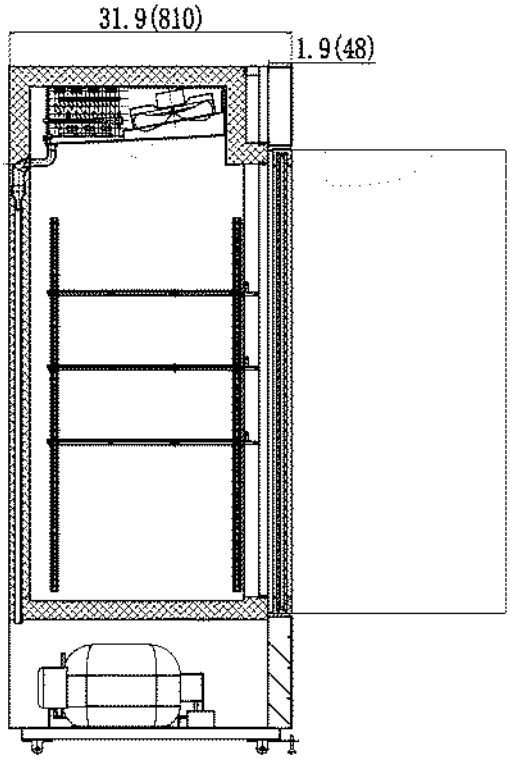

Valpro Commercial Refrigeration
5256 Eagle Trail Drive
Tampa, FL 33634

Tel: 813-502-0300
1-888-VALPRO-8
www.valprorefrigeration.com

3349 MICROWAVE
2.2 CU FT

Profile™

JES2251SJ – GE Profile™ 2.2 Cu. Ft. Capacity Countertop Microwave Oven

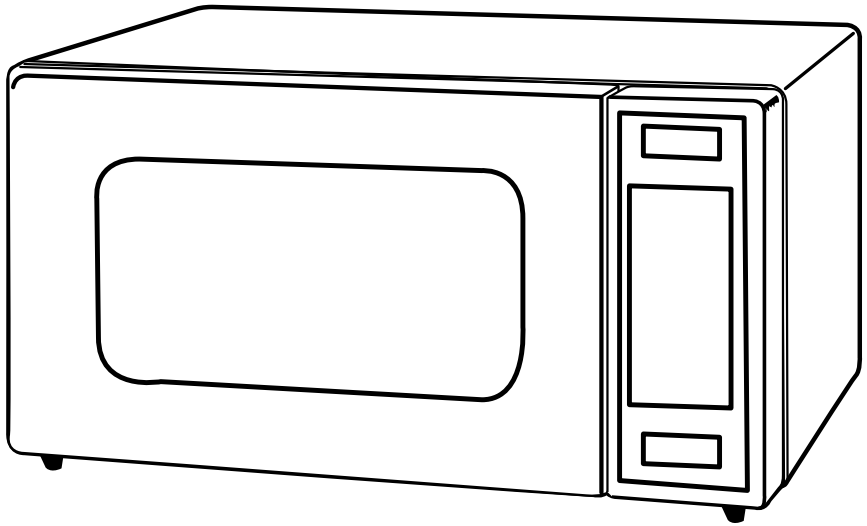

This unit designed to be placed on countertop.

Exterior Dimensions* (in inches)	
W x H x D	24-1/11 x 13-25/32 x 19-13/32

*Height includes feet.



Listed by Underwriters Laboratories

For answers to your Monogram,® GE Profile™ or GE® appliance questions, visit our website at ge.com or call GE Answer Center® service, 800.626.2000.

Specification Revised 1/10
240370

Profile™

JES2251SJ – GE Profile™ 2.2 Cu. Ft. Capacity Countertop Microwave Oven

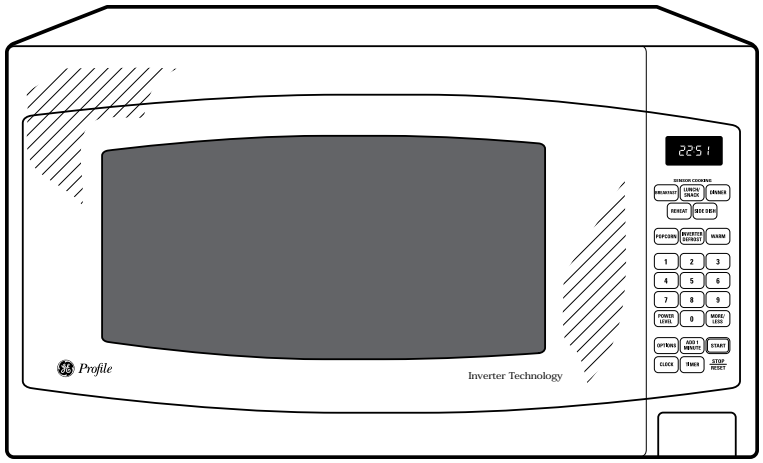

Features and Benefits

- 2.2 cu. ft. capacity – 1200 watts (IEC-705 test procedure)
- Inverter Technology – Consistent heat helps prevent overcooked edges and surfaces
- Sensor cooking controls – Automatically adjust the time and power for perfect cooking results
- Auto and Time Defrost – Automatically defrosts for a specified amount of time
- Turntable – Continually rotates food to ensure even cooking
- Child lock out – Enables you to lock the keypad to prevent the oven from being accidentally started
- Instant On Controls – Allow quick, one-touch cooking and reheating
- Model JES2251SJ – Stainless steel

Specification Revised 1/10
240370

24" Pocket Handle Dishwasher

500 Series DLX – Stainless Steel SHP865WD5N

3352a

BOSCH
Invented for life



SHP865WD5N
Stainless Steel

Also available in:

White	SHP865WD2N
Black	SHP865WD6N

The flexible 3rd rack allows you to accommodate deeper items, while adjustable tines let you customize the rack's loading space.

Features & Benefits

- 44 dBA: Quietest dishwasher brand in the US.
- A flexible 3rd rack with fold down sides adds 30% more loading area.
- The pocket handle seamlessly integrates into your kitchen & installs flush.
- EasyGlide™ rack provides a smooth glide for easier loading & unloading.
- FlexSpace™ Tines fold back to fit your larger pots & pans.

General Properties	
Number of wash cycles	5
Number of options	5
dBA	44
Third rack	Flexible 3rd Rack
Rack adjustability	Rackmatic®
Tub material	Stainless Steel
Control type	Buttons
Concealed heating element	Yes
Leak protection system	24/7 AquaStop®
Water softener	No
Five-level wash	Yes
ChildLock	No
Special features	InfoLight®, Extra Dry Option

Efficiency	
Water usage per cycle	2.9
Energy efficiency class	Tier 1
ENERGY STAR® qualified	Yes
Total annual energy consumption (kWh)	269
Total annual water consumption (g)	623.5

Capacity	
Number of place settings	16

Technical Details	
Watts (W)	1440 W
Current (A)	12 Amps
Volts (V)	120 V
Frequency (Hz)	60 Hz
Power cord length	N/A
Minimum water pressure (lb/sin)	14
Length outlet hose (in)	79"

Dimensions & Weight	
Overall appliance dimensions (HxWxD) (in)	33 7/8" x 23 9/16" x 23 3/4"
Required cutout size (HxWxD) (in)	33 7/8" x 23 5/8" x 24"
Adjustable feet	Yes
Net weight (lbs)	91 lbs

Accessories—Optional	
Drain Hose Extension Kit	SGZ1010UC
Dishwasher Accessory Kit	SMZ5000
Anti-Tarnish Silverware Cassette	SMZ5002UC
Powercord with Cold Plug	SMZPC002UC





For help and assistance with Bosch accessories please visit: www.bosch-eshop.com/eshop/bosch/us or call 1-800-944-2904 Mon-Fri 5am to 6pm PST Sat 6am to 3pm PST

Notes: All height, width and depth dimensions are shown in inches. BSH reserves the absolute and unrestricted right to change product materials and specifications, at any time, without notice. Consult the product's installation instructions for final dimensional data and other details prior to making cutout. Applicable product warranty can be found in accompanying product literature or you may contact your account manager for further details.

Warranties: Bosch warrants that the Product is free from defects in materials and workmanship for a period of three hundred and sixty-five (365) days from the date of purchase. The foregoing timeline begins to run upon the date of purchase, and shall not be stalled, tolled, extended, or suspended, for any reason whatsoever. This Product is also warranted to be free from cosmetic defects in material and workmanship (such as scratches of stainless steel, paint/porcelain blemishes, chip, dents, or other damage) to the finish of the Product, for a period of thirty (30) days from the date of purchase or closing date for new construction. This cosmetic warranty excludes slight color variations due to inherent differences in painted and porcelain parts, as well as differences caused by kitchen lighting, product location, or other similar factors. This cosmetic warranty specifically excludes any display, floor, "As Is", or "B" stock appliances.

For more information on our entire line of products, go to www.bosch-home.com/us or call 1-800-944-2904

© BSH Home Appliances Corporation. All rights reserved. Bosch is a registered trademark of Robert Bosch GmbH.

24" Pocket Handle Dishwasher

3352a

500 Series DLX – Stainless Steel SHP865WD5N

BOSCH
Invented for life

Installation Details

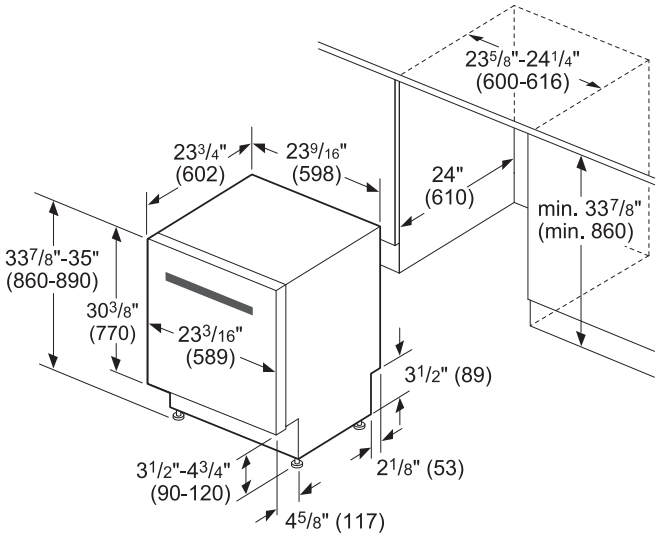

measurements in inches (mm)

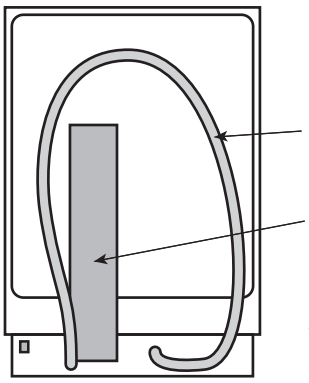

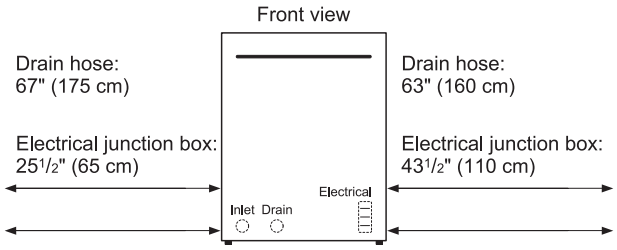

All connections are at the rear of the appliance.
Extension for drain hose available as accessory.
Power cord for connection to electrical outlet (3-prong plug) available as accessory.

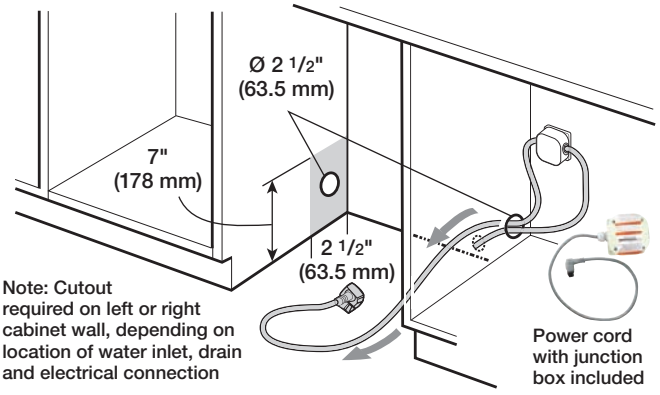

Example of Hardwire Installation

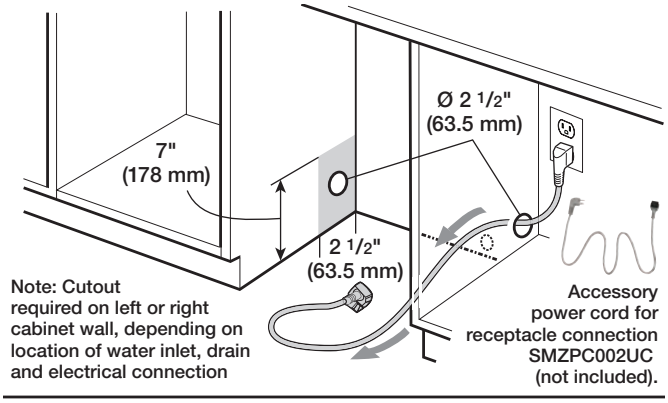

Example of an Electrical Receptacle Installation

For help and assistance with Bosch accessories please visit: www.bosch-eshop.com/eshop/bosch/us or call 1-800-944-2904 Mon-Fri 5am to 6pm PST Sat 6am to 3pm PST

Notes: All height, width and depth dimensions are shown in inches. BSH reserves the absolute and unrestricted right to change product materials and specifications, at any time, without notice. Consult the product's installation instructions for final dimensional data and other details prior to making cutout. Applicable product warranty can be found in accompanying product literature or you may contact your account manager for further details.

Warranties: Bosch warrants that the Product is free from defects in materials and workmanship for a period of three hundred and sixty-five (365) days from the date of purchase. The foregoing timeline begins to run upon the date of purchase, and shall not be stalled, tolled, extended, or suspended, for any reason whatsoever. This Product is also warranted to be free from cosmetic defects in material and workmanship (such as scratches of stainless steel, paint/porcelain blemishes, chip, dents, or other damage) to the finish of the Product, for a period of thirty (30) days from the date of purchase or closing date for new construction. This cosmetic warranty excludes slight color variations due to inherent differences in painted and porcelain parts, as well as differences caused by kitchen lighting, product location, or other similar factors. This cosmetic warranty specifically excludes any display, floor, "As Is", or "B" stock appliances.

For more information on our entire line of products, go to www.bosch-home.com/us or call 1-800-944-2904

© BSH Home Appliances Corporation. All rights reserved. Bosch is a registered trademark of Robert Bosch GmbH.

24" Pocket Handle Dishwasher

3352a

500 Series DLX – Stainless Steel SHP865WD5N

BOSCH
Invented for life

Installation Details

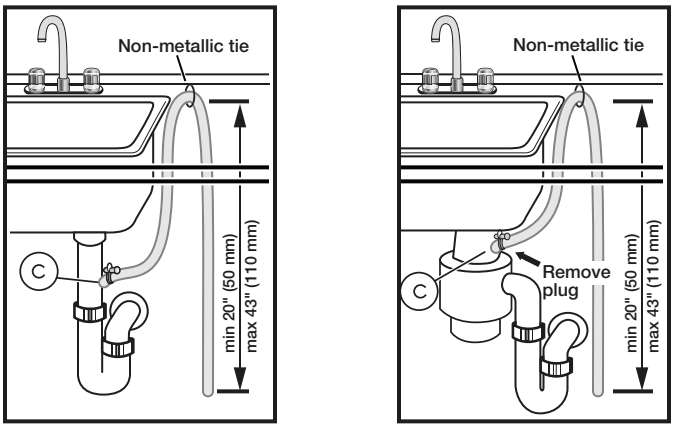

Note: Plumbing installations will vary - refer to local codes. Drain hose included is 79 (201 cm) and can be extended to a maximum of 155 3/4" (396 cm).

Always use the approved drain hose extension kit (SGZ1010UC).

Ensure a portion of the drain hose is raised between min. 20" (50 cm) and max. 43" (110 cm) above the cabinet floor.

For help and assistance with Bosch accessories please visit: www.bosch-eshop.com/eshop/bosch/us or call 1-800-944-2904 Mon-Fri 5am to 6pm PST Sat 6am to 3pm PST

Notes: All height, width and depth dimensions are shown in inches. BSH reserves the absolute and unrestricted right to change product materials and specifications, at any time, without notice. Consult the product's installation instructions for final dimensional data and other details prior to making cutout. Applicable product warranty can be found in accompanying product literature or you may contact your account manager for further details.

Warranties: Bosch warrants that the Product is free from defects in materials and workmanship for a period of three hundred and sixty-five (365) days from the date of purchase. The foregoing timeline begins to run upon the date of purchase, and shall not be stalled, tolled, extended, or suspended, for any reason whatsoever. This Product is also warranted to be free from cosmetic defects in material and workmanship (such as scratches of stainless steel, paint/porcelain blemishes, chip, dents, or other damage) to the finish of the Product, for a period of thirty (30) days from the date of purchase or closing date for new construction. This cosmetic warranty excludes slight color variations due to inherent differences in painted and porcelain parts, as well as differences caused by kitchen lighting, product location, or other similar factors. This cosmetic warranty specifically excludes any display, floor, "As Is", or "B" stock appliances.

For more information on our entire line of products, go to www.bosch-home.com/us or call 1-800-944-2904

© BSH Home Appliances Corporation. All rights reserved. Bosch is a registered trademark of Robert Bosch GmbH.

3352a

Installation Instructions

fr Notice d'installation

es Instrucciones de instalación



BOSCH

Customer Service:
1-800-944-2904

These instuctions are intended
for use by qualified installers only

Safety Definitions

⚠ WARNING

This indicates that death or serious injuries may occur as a result of non-observance of this warning.

⚠ CAUTION

This indicates that minor or moderate injuries may occur as a result of non-observance of this warning.

NOTICE

This indicates that damage to the appliance or property may occur as a result of non-compliance with this advisory.

Note: This alerts you to important information and/or tips.

Table of Contents

Safety Instructions 3
Avoiding General Hazards 4
Tools & Materials 5
Enclosure Requirements 8
Electrial Connections 11
Installation of Mounting Brackets 16
Positioning the Dishwasher 18
Securing the Dishwasher 22
Water Inlet Connection 23
Drain Connection 24
Attaching the Toe Panel 28
Customer Service 31

Important Safety Instructions: Please READ and SAVE this information

To avoid possible injury or property damage, OBSERVE ALL WARNINGS AND CAUTIONS.

These instructions are intended for use by qualified installers only. The dishwasher must be installed by a qualified service technician or installer.

- In addition to these instructions, the dishwasher shall be installed to meet all electrical and plumbing codes and ordinances (both national and local).

Read these installation instructions completely and follow them carefully. They will save you time and effort and help to ensure safety and optimum dishwasher performance.

IMPORTANT

- The dishwasher drain hose must be installed with a portion of it at least 33” (84 cm) off the cabinet floor; otherwise the dishwasher may not drain properly.
- This dishwasher is intended for indoor residential use only, and should not be used in commercial food service establishments.
- This dishwasher is designed to be enclosed on the top and both sides by cabinetry.
- NEW INSTALLATION - If the dishwasher is a new installation, ensure all connections are properly made before the dishwasher is moved into place.
- REPLACEMENT - If the dishwasher is replacing another dishwasher, check the existing dishwasher connections for compatibility with the new dishwasher, and replace parts as necessary.
- This appliance has been found to be in compliance with CAN/CSA-C22.2 No. 167/UL 749. It is the responsibility of the owner and the installer to determine if additional requirements and standards apply in specific installations.
- Not for outdoor use.

Inspect the Dishwasher

After unpacking the dishwasher and prior to installation, thoroughly inspect the dishwasher for possible freight or cosmetic damage. Report any damage immediately. Cosmetic defects must be reported within 30 days of installation. NOTE: Do not discard any bags or items that come with the original package until after the entire installation has been completed.

⚠ WARNING

Avoiding General Hazards

To reduce the risk of electric shock, fire, or injury to persons, the installer must ensure that the dishwasher is completely enclosed at the time of installation.

Do not use the dishwasher until it is completely installed. When opening the door on an uninstalled dishwasher, carefully open the door while supporting the rear of the unit. Failure to follow this warning can cause the dishwasher to tip over and result in serious injury.

Before installing the supplied counter top mounting brackets, decide which method will be used to secure the dishwasher into its opening. Once these mounting brackets are installed on the dishwasher, removing them is difficult and will damage the mounting brackets and the dishwasher.

In some conditions, hydrogen gas can form in a hot water system that has not been used for weeks. Hydrogen gas is explosive. Before filling a dishwasher from a system that has been off for weeks, run the water from a nearby faucet in a well ventilated area until there is no sound or evidence of gas.

Removing any cover or pulling the dishwasher from the cabinet can expose hot water connections, electrical power and sharp edges or points. Handle with care.

Tools and Materials Needed



Adjustable Wrench

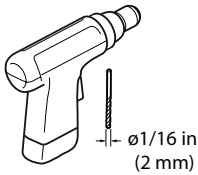

Drill

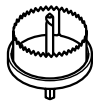

Hole Saw

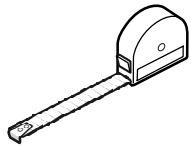

Tape Measure

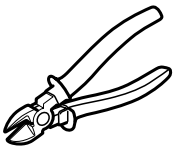

Wire Cutter

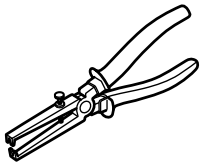

Wire Stripper

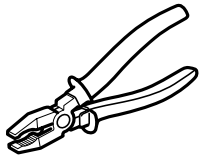

Pliers

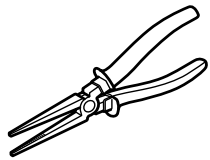

Needle Nose Pliers

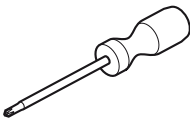

Phillips Screwdriver

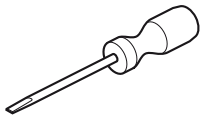

Flat Screwdriver

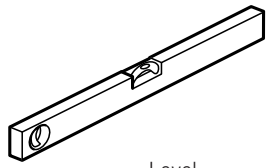

Level

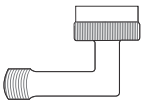

Elbow connection with 3/4” female hose threads on one end and fits your water supply line (copper tubing, compression fitting, or braided hose) on the other.

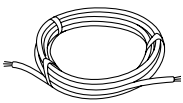

Electrical Supply Cable - Minimum #14 AWG, 2 conductor, 1 ground, insulated copper conductors rated 75° C or higher.
Only needed if house electrical line is not adequate.



Hot Water Supply Line - Minimum 3/8” O.D. copper tubing or metal braided dishwasher supply line.
Only needed if house water supply line is not sufficient.

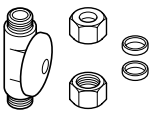

Shut-off valve and fittings appropriate for hot water supply line (copper tubing/compression fitting, or braided hose).

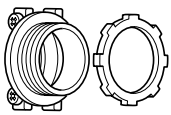

UL listed conduit connector or strain relief is required if you attach the field wiring directly to the terminal block.

Materials supplied (All Models)

A 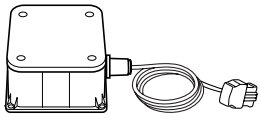 Junction Box

B 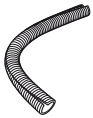 Edge Protector

C 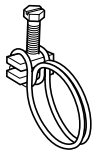 Screw Clamp (for drain hose)

D 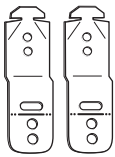 Mounting Brackets

E  Mounting Bracket Screws Ø 4x13 mm

F  Adhesive Backed Cord Clip

Materials Supplied

(Model Dependent; your dishwasher is supplied with one of the toe panel kits shown below)

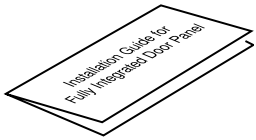

Installation Guide for Fully Integrated Door Panel

G

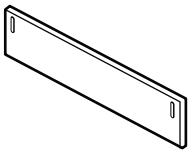

Slotted Toe Panel

H



Slotted Toe Panel Screws Ø 4x16 mm

I

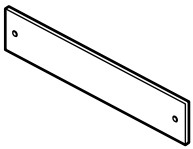

Non-Slotted Toe Panel

J

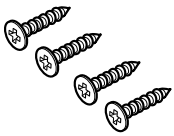

Non-Slotted Toe Panel Screws - Black or silver depending on toe panel color

K

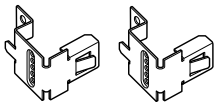

Toe Panel Mounting Brackets (used with non-slotted toe panel shown above)

L

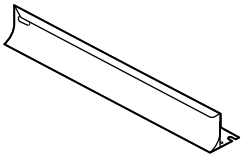

Plastic Toe Panel

M

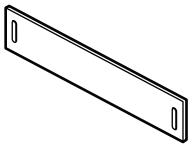

Slotted Toe Panel (used with Plastic Toe Panel and Ø 4x 16 screws, H, listed above)

Enclosure Requirements

WARNING

Avoid Scalding or Electrical Shock Hazard!
Make sure the water supply and electrical supply are shut off before installation or service.
Avoid Electrical Shock/Fire Hazard!
Do not allow the electrical and supply lines to touch.

1

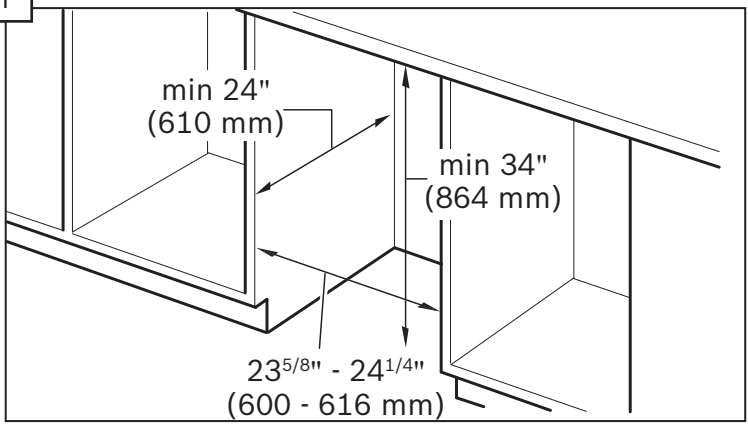

Note: This dishwasher is designed to be enclosed on the top, back and both sides by standard residential kitchen cabinetry.

- Select a location as close to the sink as possible for easy access to water supply and drain lines.
- For proper dishwasher operation and appearance, ensure that the enclosure is square and has the dimensions shown.

2

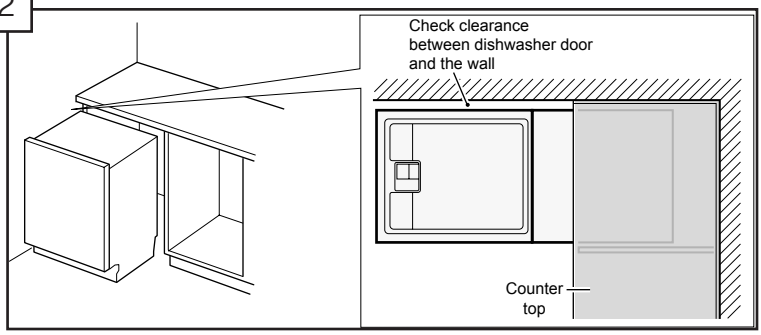

- If the dishwasher is to be installed in a corner, ensure that there is adequate clearance to open the door as shown.

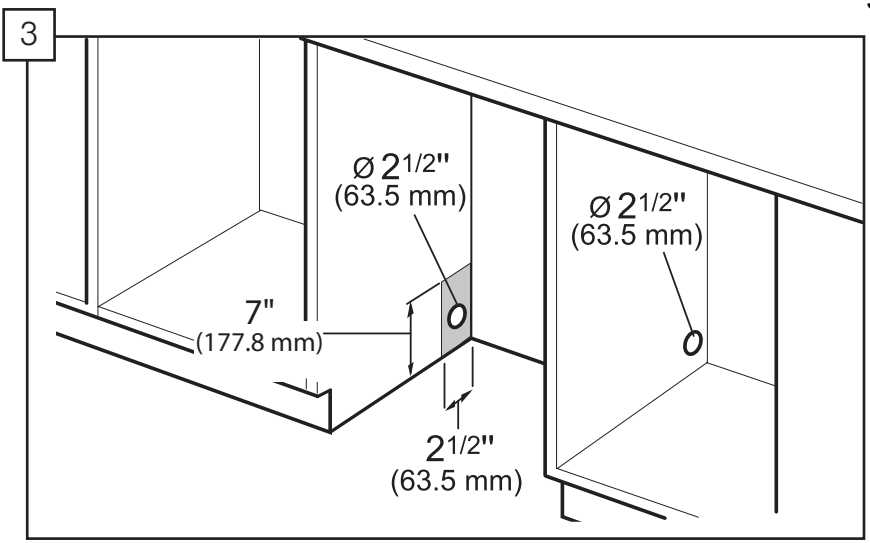

- After locating the proper place for your dishwasher, create required openings in your cabinets in order to allow for water, drain and electrical lines on the appropriate side.
- The holes should be cut within the 7 x 2.5" area shown.

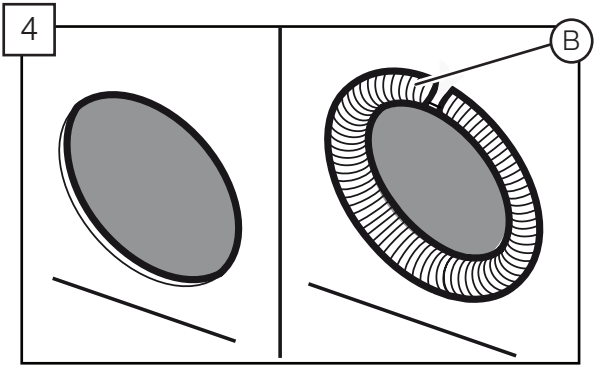

- If the opening is made through wood, sand it smooth.
- If the opening is made through metal, use the provided edge protector (B) or other approved method to protect wiring from damage.

5

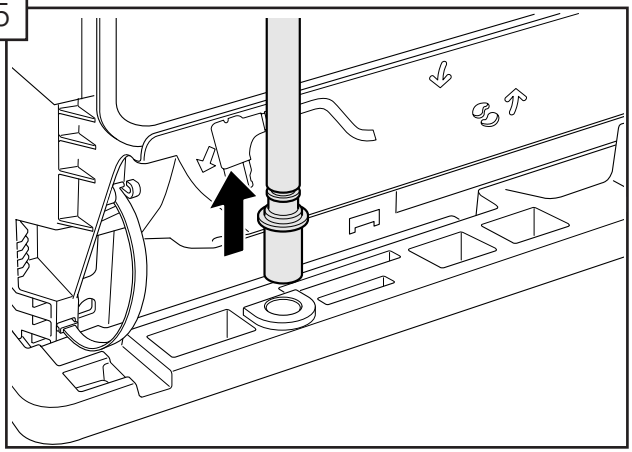

- Pull the drain hose out of the packaging base as shown.
- Set toe panel aside for later use.

6

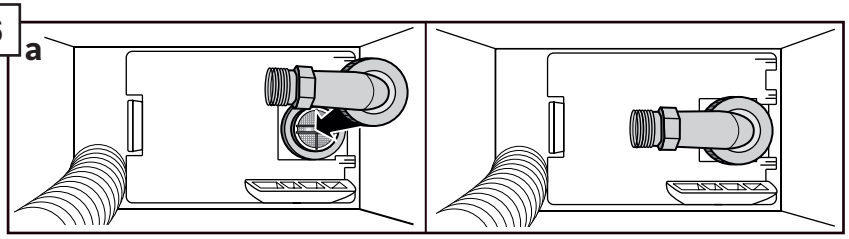

- Attach elbow joint to dishwasher as shown. Do not overtighten.

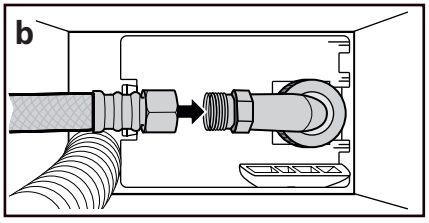

- Attach hot water line to elbow.

NOTICE

Avoid cross-threading! It will cause leaks. After attaching hose, turn on water and check for leaks.

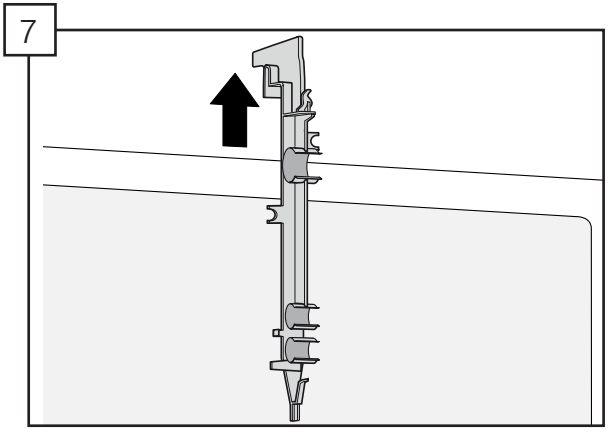

- Remove the hose clip at the back of the dishwasher as shown. The hose clip may be used later to hold the drain hose inside your cabinet.

Electrical Connection

⚠ WARNING

Avoid Electrical Shock Hazard!
Do not work on an energized circuit. Doing so could result in serious injury or death. Only qualified electricians should perform electrical work. Do not attempt any work on the dishwasher electric supply circuit until you are certain the circuit is de-energized.

To avoid possible injury or property damage, care should be exercised when the dishwasher is installed or removed to reduce the likelihood of damage to the power cord.

Avoid Fire Hazard!
Make sure electrical work is properly installed and checked by qualified electricians.

Make sure there are no loose electrical connections. Make sure all electrical connections are properly made.

Electrical Supply

The customer has the responsibility of ensuring that the dishwasher electrical installation is in compliance with all national and local electrical codes and ordinances. The dishwasher is designed for an electrical supply of 120V, 60 Hz, AC, connected to a dishwasher-dedicated, properly grounded electrical circuit with a fuse or breaker rated for 15 amps. Electrical supply conductors shall be a minimum #14 AWG copper wire rated at 75°C (167°F) or higher.

Dishwasher Electrical Rating

Volts	Hertz	Amperes	Watts
120	60	12	1,440 (max)

Grounding Instructions

The dishwasher must be properly grounded before operating. This appliance must be connected to a grounded metal permanent wiring system or an equipment grounding conductor must be run with the circuit conductors and connected to the equipment grounding terminal or lead on the dishwasher. Make sure that the dishwasher is connected to a suitable ground in compliance with all local codes or, in the absence of a local code, with the NATIONAL ELECTRICAL CODE in the United States or the CANADIAN ELECTRIC CODE C22.1-latest edition in Canada as well as any provincial/state or municipal or local codes that apply.

Note: Installations employing a Receptacle - The accessory cord kit, Model SMZPC002UC, designed for connection to a receptacle is not provided, but can be ordered through Customer Service by calling 1-800-944-2904. Make sure the household receptacle meets the electrical supply requirements as well as national and local codes. If you choose to permanently connect to hardwiring, follow the next steps.

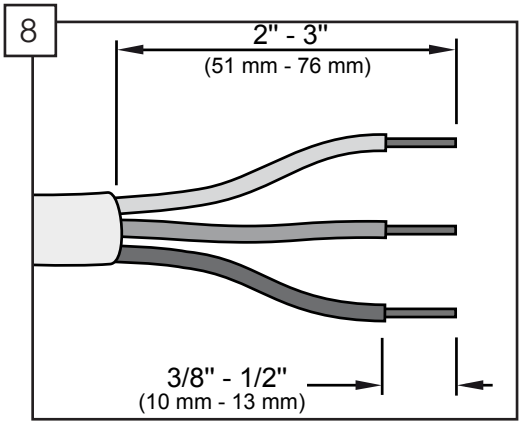

- Turn off any electricity to installation area.
- Remove screws and cover from junction box (A) and set aside for later use.
- Remove outer casing and insulation of the hardwiring/power cord as shown.

⚠ WARNING

Loose and improperly installed electrical connections can result in overheating!
Carefully review terminal block installation instructions.

9

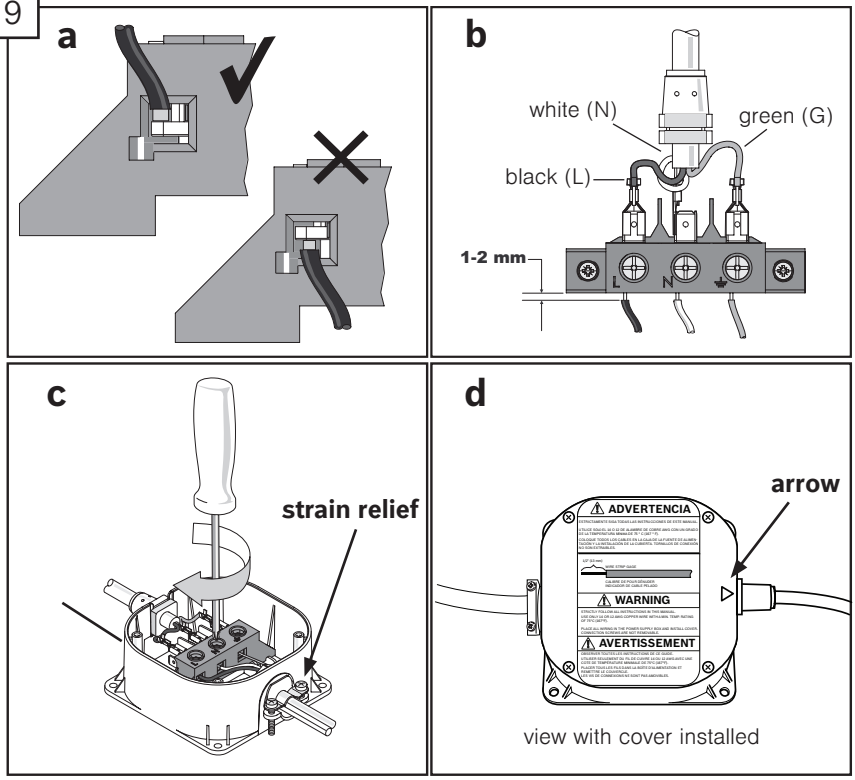

- Attach an approved strain relief (not provided) to opposite side of junction box.
- Without adjusting the terminal screws, insert the wires properly in the terminal. Make sure that the black wire connects with the black (L) and the white connects with the white (N) and the green or bare copper wire with the green (G or ⏚). (See box b)
- Do NOT insert wire underneath the screw clamp. (see box a)
- Be certain the wire insulation is not trapped in the terminal. 1-2 mm of wire must be visible (See box b)
- After inserting wire, completely tighten the terminal screws by turning clockwise. (See box c)
- After tightening the terminal screws, pull on each wire to ensure that they are secure. Wire should not be loose in the terminal after correct installation.
- Secure the wire in the junction box with the strain relief.

Note: The arrow (shown in box d above) should align with the power cord.

10

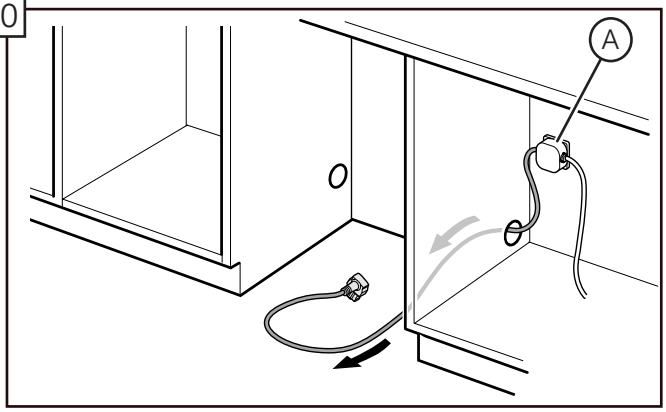

- Mount the dishwasher electrical supply junction box (A) and dedicated receptacle in an accessible cabinet adjacent to the dishwasher (do not mount the junction box or receptacle behind the dishwasher).

Note: Screws are not provided for mounting electrical supply junction box.

11

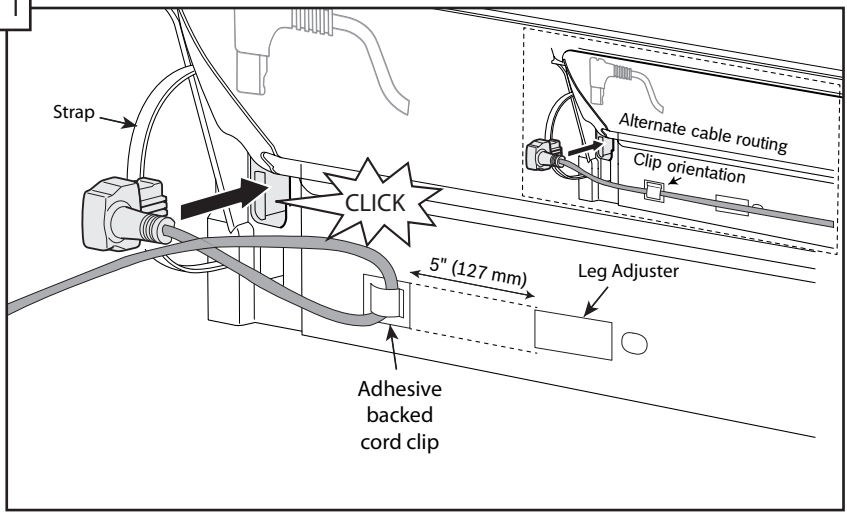

- Check all electrical connections to ensure they are secure and then reattach the junction box cover.
- Place adhesive backed cord clip (provided in the installation kit) 5 inches from leg adjuster as shown in the figure above and route power cord through the clip. *Note:The length of cord measured from the plastic back strap to the receptacle should be ≤ 47.25" (1,200 mm).*
- Plug the end of the supply cord into the back of the dishwasher as shown until it clicks.

Installation of Mounting Brackets

WARNING

Avoid Tip Over Hazard!

Do not use the dishwasher until it is completely installed. When opening the door on an uninstalled dishwasher, carefully open the door while supporting the rear of the unit. Failure to follow this warning can result in serious injury.

Note: Before installing the supplied counter top mounting brackets, decide which method of securing the dishwasher into its enclosure will be used.

Once the mounting brackets are installed on the dishwasher, removing them is difficult and will damage the mounting brackets and the dishwasher.

If you have a Fully Integrated Panel, do not attach mounting brackets until after attaching the panel to the door.

12

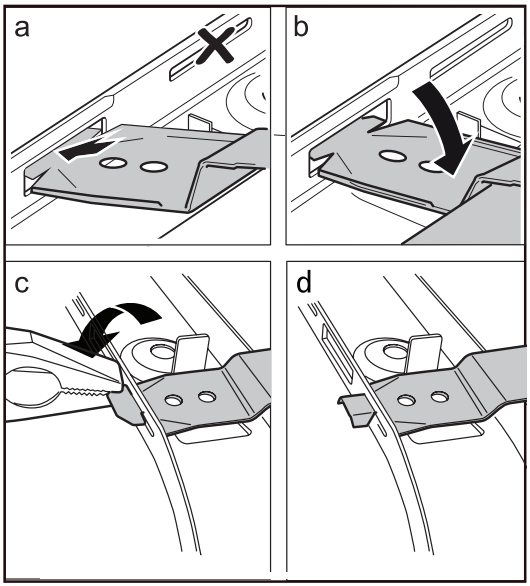

- Top Mount is used for counter tops made of *wood or other materials that can be easily drilled.* If you have solid surface, marble, granite, or other very hard countertops, skip to step 13 now.
- If insulation is covering the area in 12a, fold it back.
- Orient the mounting brackets (D) for top mounting as shown in12b.
- Using pliers, bend side flanges down as shown in 12c and 12d so the bracket will not slip out of slot in frame. *Do not attach to cabinet yet.*

13

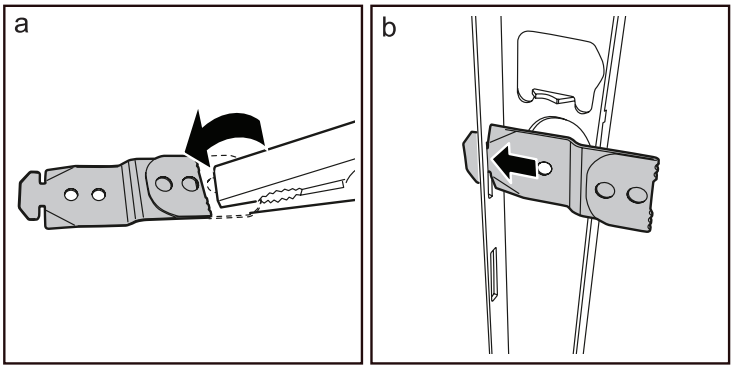

- Side Mount is used for counter tops made of *marble, granite, or other very hard materials* that cannot be easily drilled.
- Grasp mounting bracket (D) with pliers and fold bracket at the perforation over onto itself as shown in 13a.
- Slip bracket flange through side slots in frame as shown in 13b.
- Using pliers, bend side flanges down as shown in 12c and 12d so the bracket will not slip out of slot in frame. *Do not attach to cabinet yet.*

Positioning the Dishwasher

14

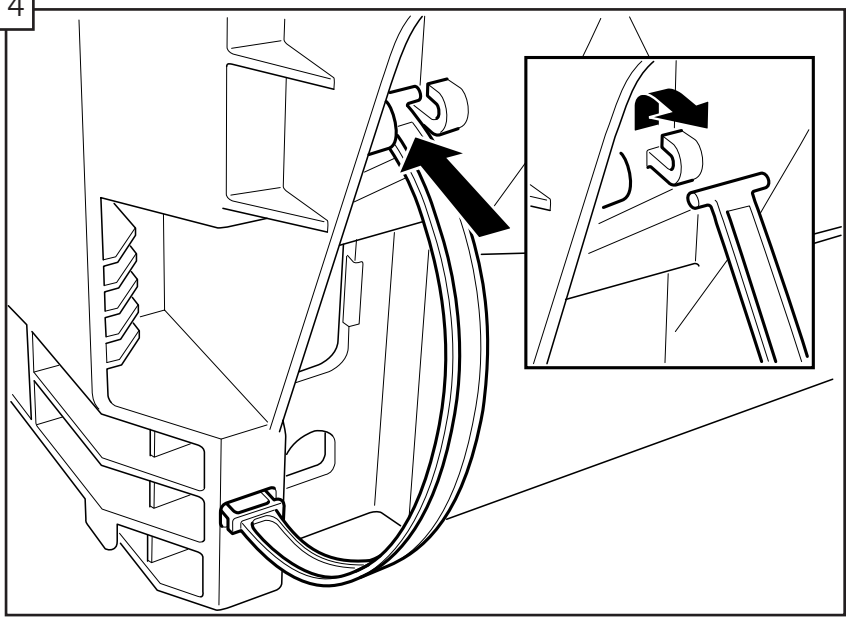

- If your sink is to the right side of where you are installing the dishwasher, you will need to reposition the hoses and power cord behind the dishwasher before installing.
- To do so, unhook the strap that the hoses are running through on the back of the dishwasher base and position them per your requirements.
- If your sink is to the left side, leave the hoses and power cord as they came and skip to step 16.

15

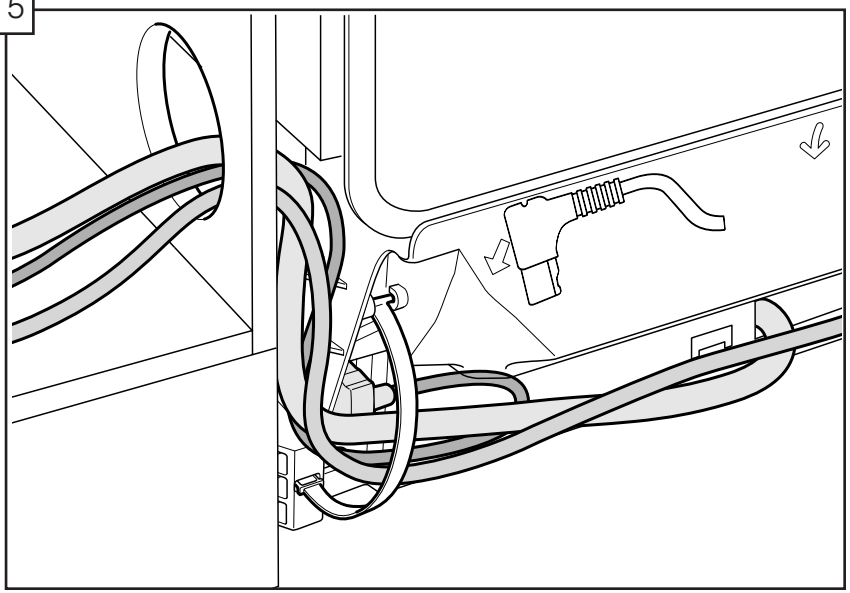

- Reposition the hoses so they run through the strap on the other side.
- Be sure to snap the strap back in place to secure the hoses as shown.

16

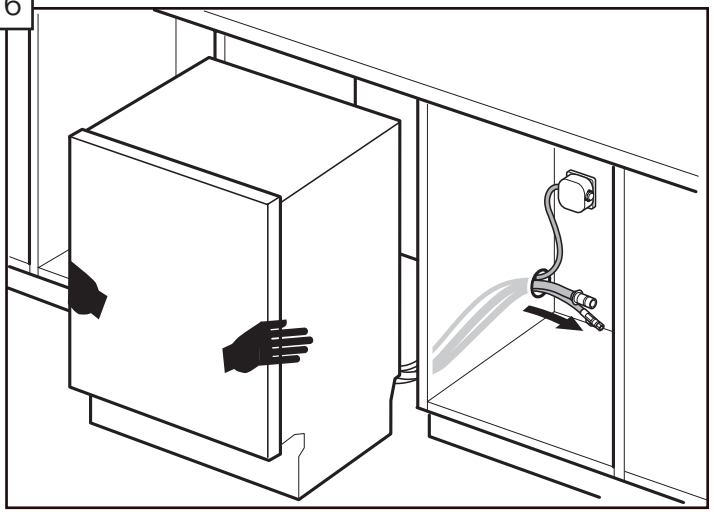

- To avoid scratching the floor, use floor protection and caution when sliding the dishwasher into the cabinet. Use hands on both sides of dishwasher to push evenly.
- Pull water inlet, drain hose and power cord through the hole in cabinet as shown.

17

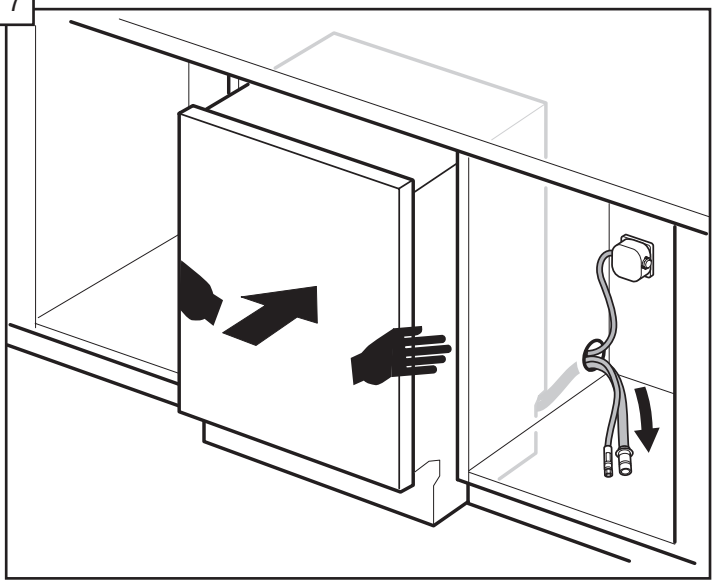

- Push the unit 2/3 of the way into the opening and stop.

18

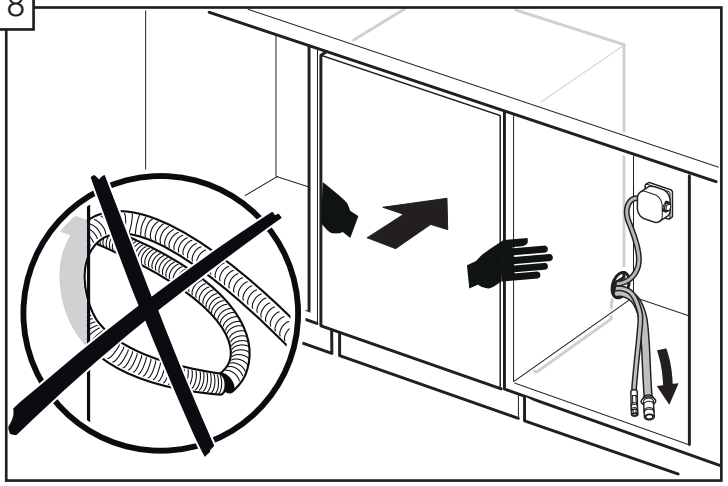

- Reach into adjacent cabinet and pull hoses and excess power cord completely out so they do not get kinked.
- Push the unit in until flush with cabinet door.

19

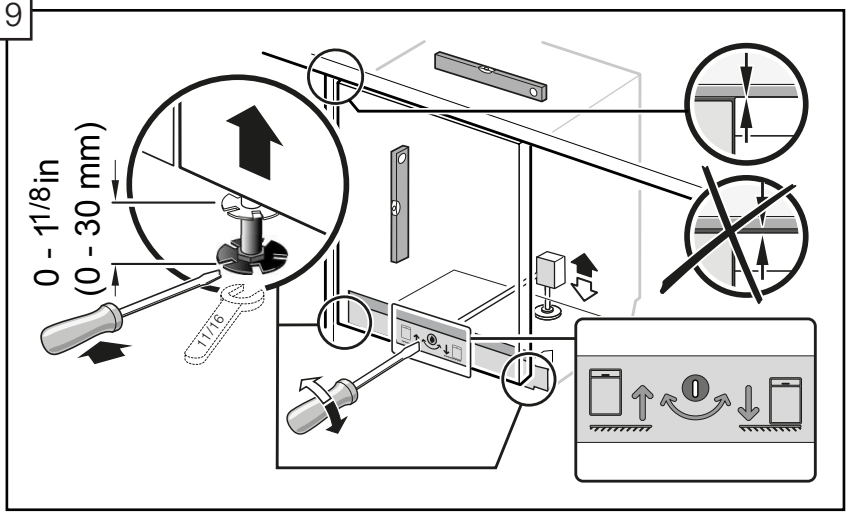

- Adjust the legs as shown to raise the unit so it is flush with the counter.
- Use a level to check that your dishwasher is level.
- Level side to side by turning feet clockwise to raise or counter-clockwise to lower front of the unit as shown.
- Level front to back by turning center screw clockwise to raise or counter-clockwise to lower the back.

20

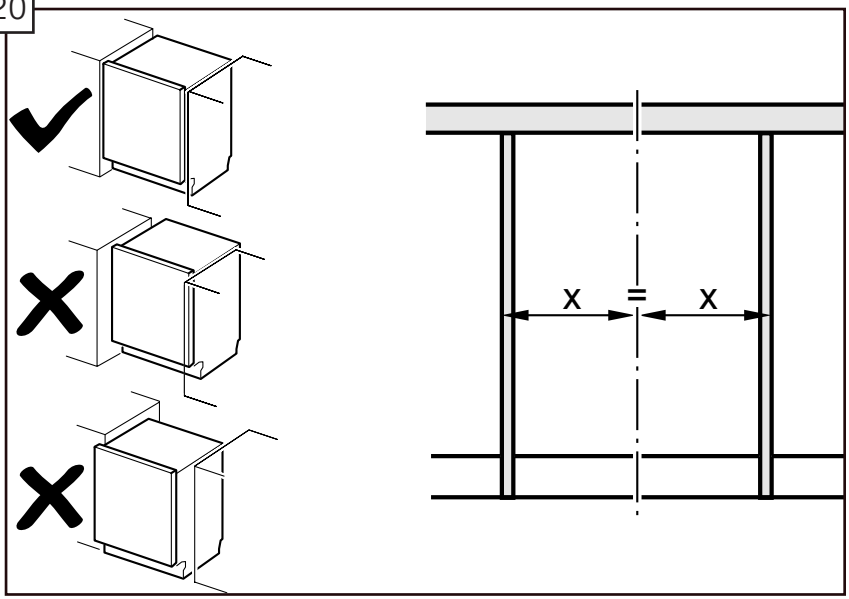

- Center the dishwasher in the opening before securing it to your cabinet or counter top as shown.

Securing the Dishwasher

21

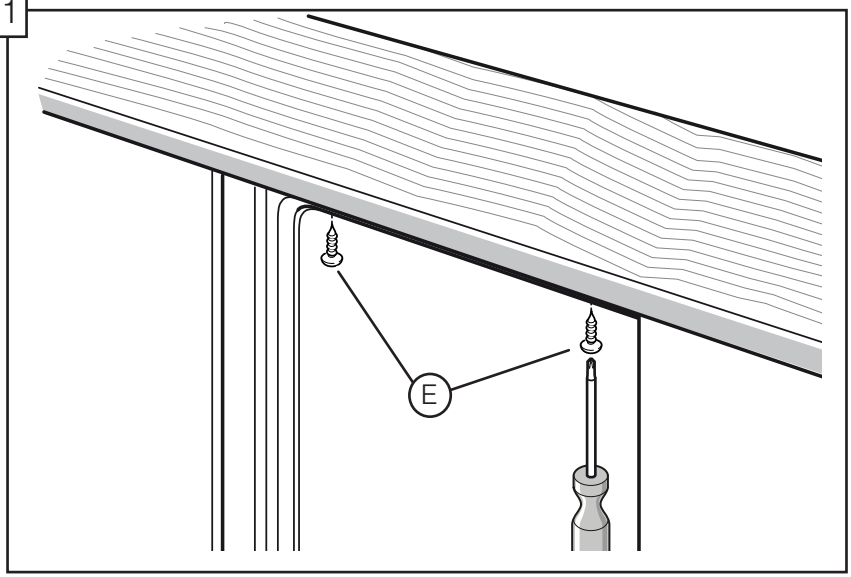

22

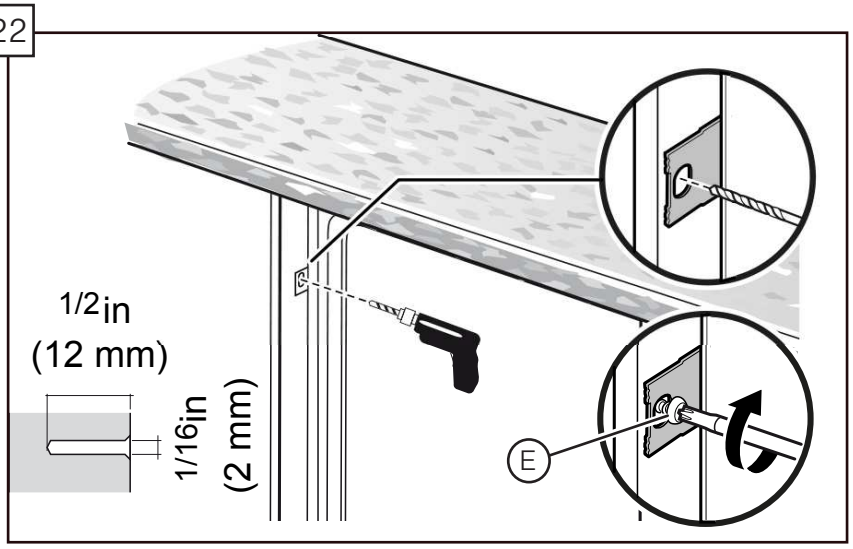

- Drive the mounting screws (E) through the holes in the mounting brackets as shown for Top (figure 21) or Side Mount (figure 22).

Water Inlet Connection

⚠ WARNING

Scalding Hazard!
Do not perform any work on a pressured hot water line. Serious injury could result. Only qualified plumbers should perform plumbing work. Do not attempt any work on the dishwasher hot water supply plumbing until you are certain the hot water supply is shut off.

NOTICE

Temperatures required for soldering and sweating will damage the dishwasher. If plumbing lines are to be soldered or sweated, keep the heat source at least 6 inches (152.4 mm) away from the dishwasher.

Hot Water Supply

The hot water heater should be set to deliver approximately 120° F (49° C) water to the dishwasher. Water that is too hot can cause some detergents to lose effectiveness. Lower water temperatures will increase run times. The hot water supply pressure must be between 15 - 145 psi (1 - 10 bar).

IMPORTANT NOTES:

- If using a solder joint instead of a compression fitting, be sure to complete all solder connections before connecting the water supply line to the dishwasher.
- Make sure there are no sharp bends or kinks in the water line that might restrict water flow.
- Always use appropriate seals when making plumbing connections.
- Before connecting the water supply line to the dishwasher, flush the incoming water line for approximately 5 minutes to clear any foreign material.
- Properly tighten all water connections. Not doing so could result in a leak.
- Check local plumbing codes for approved plumbing procedures and accessories. All plumbing should be done in accordance with national and local codes.
- If using copper tubing or other material not depicted in this manual for water supply, defer to a licensed plumber for proper installation.

23

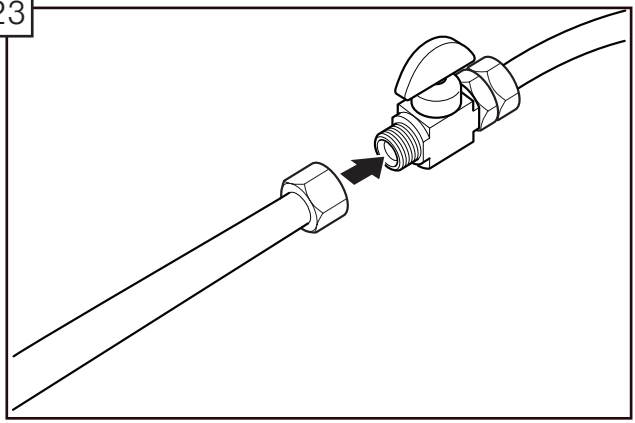

- Connect the dishwasher water supply line to the water shut off valve. If one isn't already in the supply line, install one (not provided).
- You will need to use an approved dishwasher water supply line with the correct fittings for this connection.
- After all connections are made, turn on the hot water and check for leaks.

Drain Connection

IMPORTANT NOTES about your drain connection:

- If local ordinance require an air gap, install it according to the manufacturer's instructions.
- If the dishwasher drain hose is to be connected to a disposer dishwasher drain connection, remove the plug from the disposer's dishwasher drain connection.
- The dishwasher drain hose must have one place along its length that is securely attached 33" (508 mm) above the cabinet floor.
- The drain hose length can be extended if necessary. The maximum length of the drain hose, including the hose leading to the air gap, is 150" (380 cm).

24

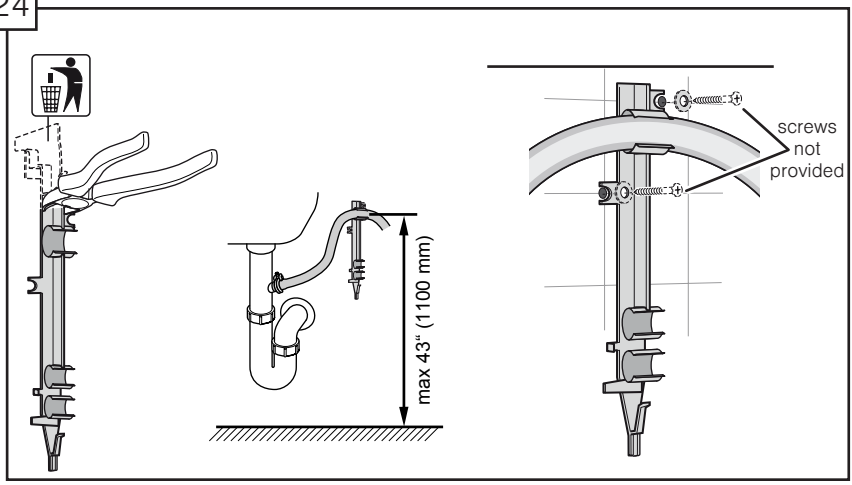

- You may use the piece you removed in Step 7 to attach to the inside of the adjacent cabinet and hang the drain hose from as shown (screws are not supplied) in place of using a Nonmetallic Tie as pictured in the next illustrations. Do not exceed 43” in drain hose height.
- The dishwasher drain hose must be installed with a portion of it at least 33” (84 cm) off the cabinet floor; otherwise the dishwasher may not drain properly.

NOTE: Place hose clamp (C) around end of drain hose BEFORE connecting to the plumbing.

25

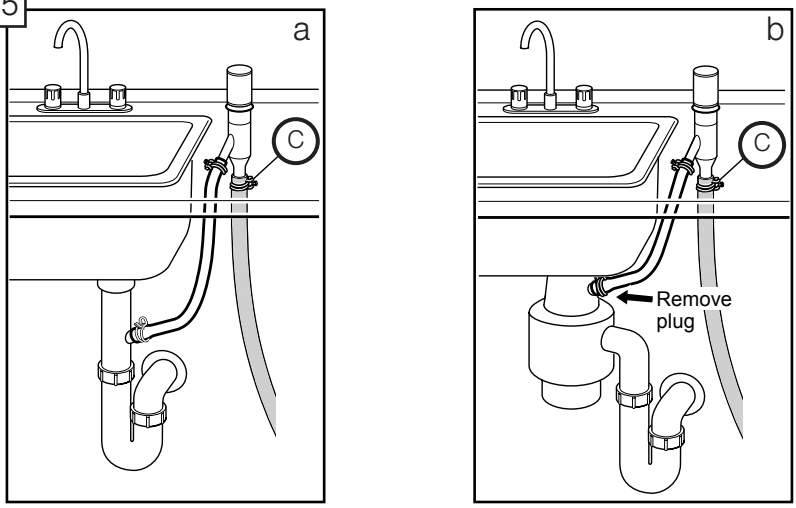

- The dishwasher drain hose may be connected to the drain plumbing using an air gap in one of two ways:
  - Connect to the under sink dishwasher drain connection (25a).
  - Connect to a disposer dishwasher drain connection (25b).

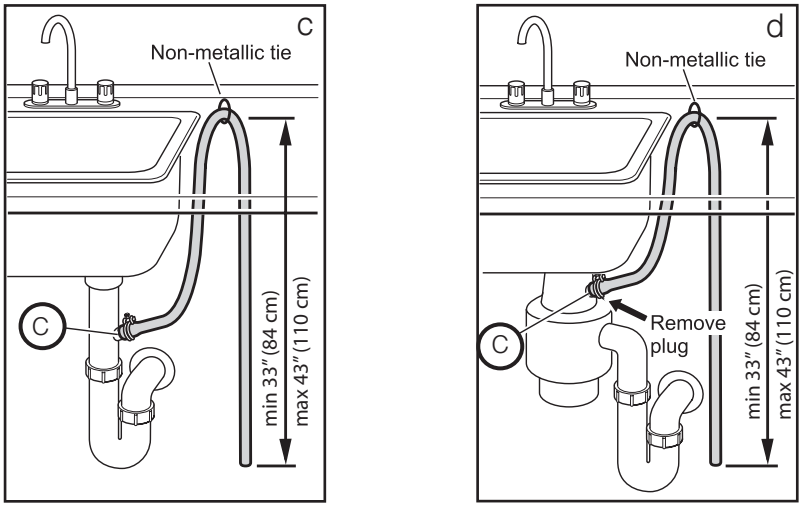

- The dishwasher drain hose may be connected to the drain plumbing using a high loop in one of two ways:
  - Connect to the under sink dishwasher drain connection (25c).
  - Connect to a disposer dishwasher drain connection (25d).

26

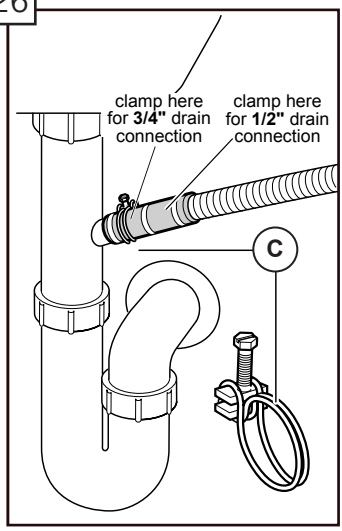

- Use the clamp provided (C) to attach the drain hose to the house plumbing as shown.

Attaching the Toe Panel

27

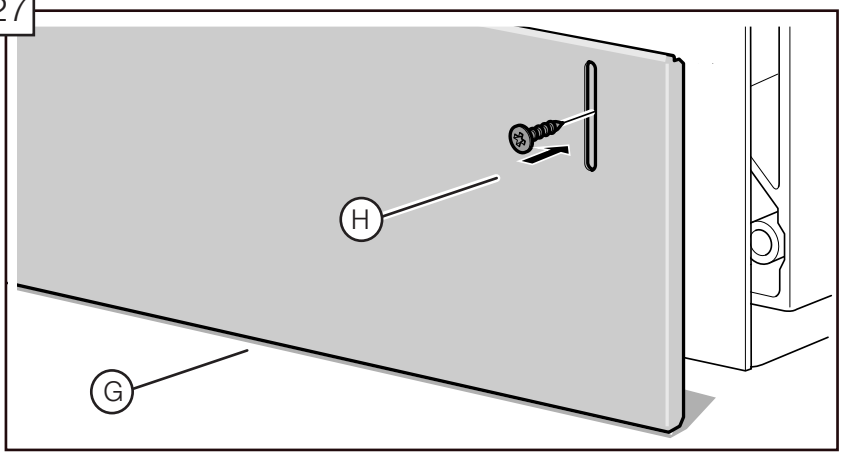

If your dishwasher came with a slotted toe panel (G) only, follow these instructions; otherwise skip to 28 now.

Note: If using the slotted toe panel shown in 27 above, then metal mounting brackets shown in 28 are not required.

- Position the slotted toe panel (G) on the dishwasher. Allow it to rest on the floor.
- Attach using screws (H) as shown. Use only the supplied screws to avoid damaging the dishwasher. The toe panel should be flush with the floor. Your installation is complete!

28

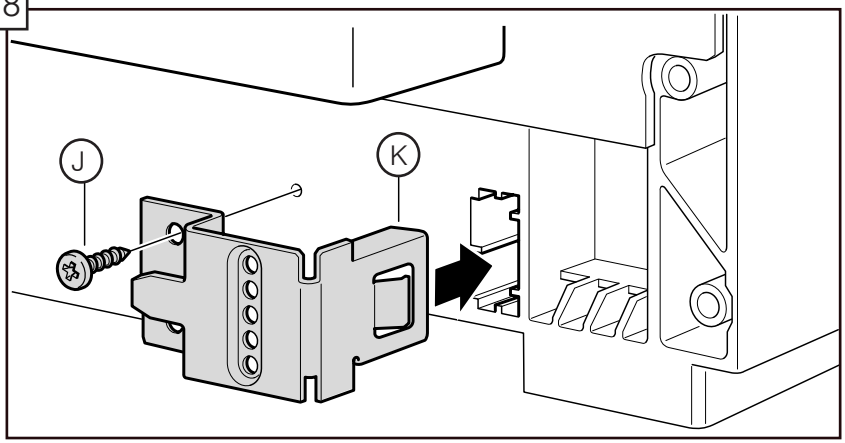

If your dishwasher came with a non-slotted toe panel (I) and toe panel brackets (K) follow these instructions; otherwise skip to 31 now.

- Plug metal brackets (K) into openings on both sides of the base as shown.
- Use screw (J) to mount metal brackets to the base as shown.

29

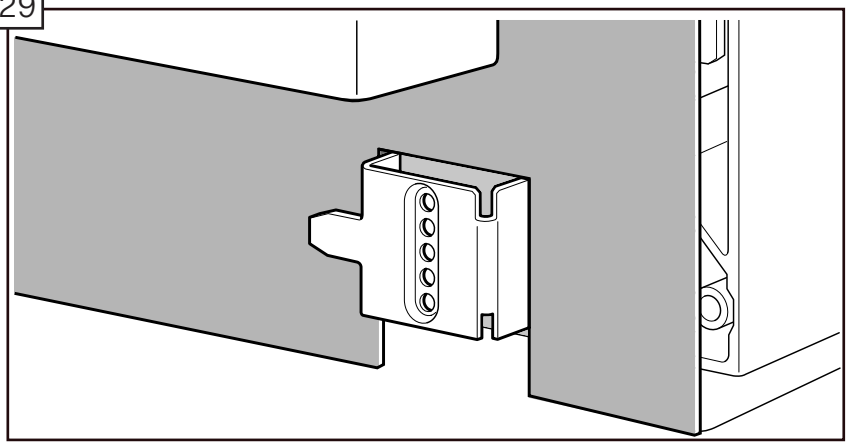

- Tuck the pre-attached rubber apron behind the fingers on the metal brackets as shown.

30

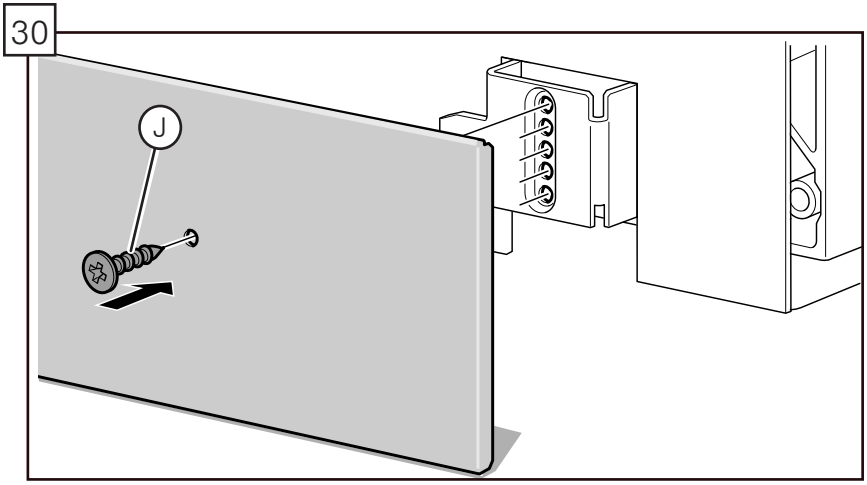

- Slide metal toe panel into position ensuring the bottom of the toe panel is flush with the floor. Use screw (J) to mount the toe panel through the hole it matches up with on the metal brackets (K) as shown.

Note: The toe panel height can be adjusted by screwing into a different hole in the bracket.

- Check for correct fit of apron by opening the door. Ensure the apron does not bind up and can freely move up and down behind the toe panel. Your installation is complete!

31

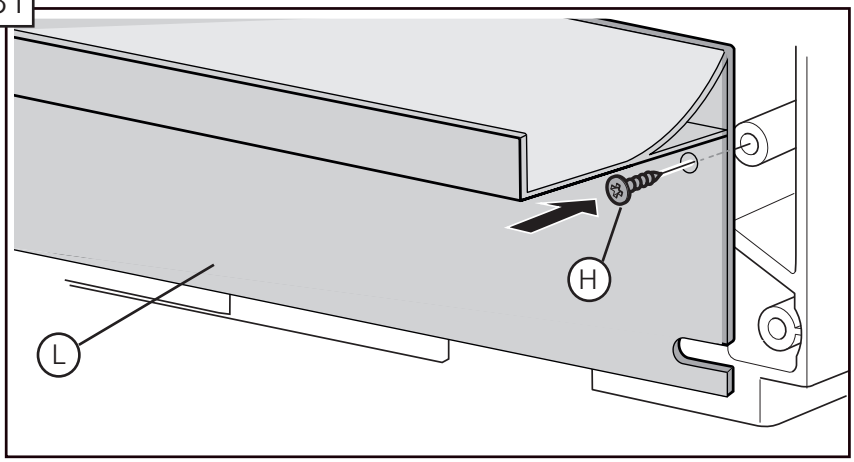

If your dishwasher came with a plastic toe panel (L) and slotted toe panel (M) follow these instructions:

Note: If using the plastic toe panel shown in 31 above, then metal mounting brackets shown in 28 are not required.

- Align the plastic toe panel on the base of the dishwasher so the holes line up.
- Attach using screws (H) as shown. Use only the supplied screws to avoid damaging the dishwasher.

32

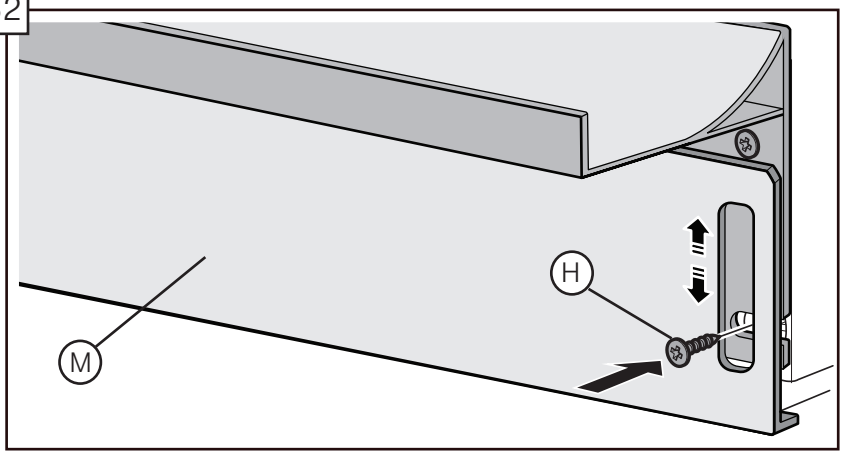

- Slide metal toe panel into position ensuring the bottom of the toe panel is flush with the floor. Your installation is complete!

Customer Service

Your dishwasher requires no special care other than that described in the Care and Maintenance section of the Use and Care Manual. If you are having a problem with your dishwasher, before calling for service please refer to the Troubleshooting section in the Use and Care Manual. If service is necessary, contact your dealer or installer or an authorized service center.

Do not attempt to repair the appliance yourself. Any work performed by unauthorized personnel may void the warranty. If you are having a problem with your dishwasher and are not pleased with the service you have received, please take the following steps (in the order listed below) until the problem is corrected to your satisfaction:

1. Contact your installer or the Authorized Service Contractor in your area.
2. Write us at the address below:
   BSH Home Appliances Corporation
   1901 Main Street
   Irvine, CA 92614
3. Call us at the Customer Service phone number before calling retailer for technical problems :
   1-800-944-2904

Please be sure to include (if you are writing), or have available (if you are calling), the following information:

- Model number (SH_ _ _ _ _ _ UC)
- Serial number (FD_ _ _ _ _ _ _ _ _ _)
- Date of original purchase (mm/dd/yyyy)
- Date the problem originated (mm/dd/yyyy)
- Explanation of the problem
- Daytime phone number where you can be reached.

Please make a copy of your invoice and keep it with this manual. The customer must show proof of purchase to obtain warranty service.

3355 DRINK VENDING MACHINE
MODEL DZF 3000 IS FOR AN ALL DRINK UNIT

SZF/DZF

VARIABLE TEMP GLASSFRONT VENDOR

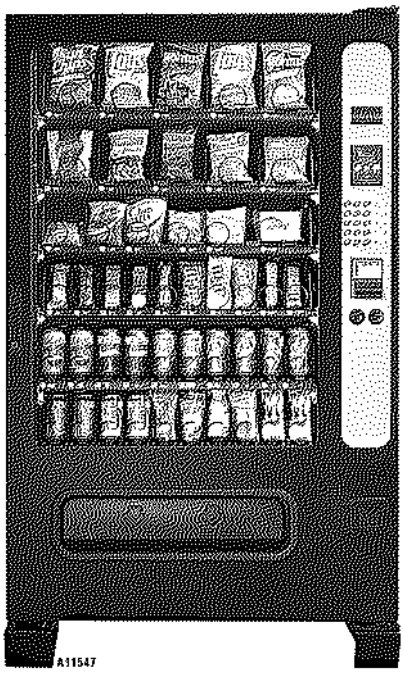

MODELS:

3207/3207A – SZF/DZF 3000 (3 WIDE)

3208/3208A – SZF/DZF 5000 (5 WIDE)

SERVICE MANUAL

FEB 2007

P/N 4214792 • D

SPECIFICATIONS

DIMENSIONS & WEIGHT

TYPE	SZF/DZF3000 (3 WIDE)		SZF/DZF5000 (5 WIDE)	
MODEL	3207	3207A	3208	3208A
WIDTH	29.5 in. (74.9 cm)		41.2 in. (104.6 cm)	
DEPTH	38 in. (96.5 cm)			
HEIGHT	72 in. (182.9 cm)			
ESTIMATED WEIGHT[1]	693 lbs (614 kg)		816 lbs (370 kg)	
EST. SHIPPING WT.[1]	722 lbs (327 kg)		846 lbs (384 kg)	

Note: [1] Weights will vary depending on tray configuration and optional equipment installed.

ELECTRICAL

MODEL		Panasonic Super 1/3 Hp		Danfoss 1/2 Hp	
VOLTAGE		115 VAC	230 VAC	115 VAC	230 VAC
CYCLE		60 Hz	50 Hz	60 Hz	50 Hz
NOMINAL AMPS	HEATED GLASS	8.0 Amps	4.0 Amps	10.5 Amps	5.2 Amps
	NON HEATED GLASS	7.0 Amps	3.5 Amps	9.5 Amps	4.8 Amps
TRANSFORMER		110/24 VAC	230/24 VAC	110/24 VAC	230/24 VAC

REFRIGERATION

HORSEPOWER	Panasonic Super 1/3 Hp	Danfoss 1/2 Hp
TYPE	Hermetically Sealed	Hermetically Sealed
CONTROLS	Electronic	Electronic
REFRIGERANT	R-134a	R-134a
CHARGE	20 oz	16 oz

COIN CHANGER, BILL VALIDATOR, CARD READER

TYPE	Any MDB Peripheral Device

VENDOR OPERATION

LOCATION	Suitable for indoor use only
RECOMMENDED OPERATING TEMPERATURE	Between 32° and 100° Fahrenheit (0° and 38° Celsius)

Your Configured Ricoh MP C6004



*Note: The image is a photo realistic illustration of your selected configuration.

DIMENSIONS

WIDTH	DEPTH	HEIGHT
58.70in	**27.00in**	**47.60in**
(1,491mm)	(686mm)	(1,209mm)

Actual dimensions may vary. These are approximate only.

POWER CONSUMPTION (MAIN UNIT)

120V-127V, 60Hz

Additional power requirements may apply.

Please read each option's description copy to see if additional power sources are needed.

Your Chosen Options

- MP C6004
- Paper Feed Unit PB3160
- LCIT RT3030
- Finisher SR3210
- Bridge Unit BU3070
- Punch Unit PU3050 NA
- PostScript3 Unit Type M19
- Fax Option Type M20

Main Unit

Main Unit

Item/Description	Item #	Power Requirements
MP C6004	417453	120V-127V, 60Hz

Paper Tray & Optional Accessories

Item/Description	Item #	Power Requirements
Paper Feed Unit PB3160	416544	N/A
LCIT RT3030	416548	N/A

Output & Finishing Options

External

Item/Description	Item #	Power Requirements
Finisher SR3210	417483	N/A
Bridge Unit BU3070	417587	N/A

Hole-Punching

Item/Description	Item #	Power Requirements
Punch Unit PU3050 NA	416609	N/A

Print/Scan Options

Network Environment

Item/Description	Item #	Power Requirements
PostScript3 Unit Type M19	417504	N/A

Fax Options

Item/Description	Item #	Power Requirements
Fax Option Type M20	417531	N/A

Main Unit

Main Unit

Item/Description	Item #	Thumbnail
MP C6004 • Output Speed (Letter): 60-ppm • Average Monthly Volume: 15,000 impressions/month • Maximum Monthly Volume: 50,000 impressions/month • Power Requirements: 120V-127V, 60Hz • Weight: 228 lbs. (103.4 kg) • W × D × H (inches): 23.1 × 27 × 37.9 • W × D × H (mm): 586.74 × 685.8 × 962.66	417453	

Note:
1. The standard DataOverwriteSecurity System (DOSS) included with the mainframe is not ISO 15408 certified.
2. The DOSS does not overwrite the HDD for the Color Controller E-23C.
3. MP C6004 cannot be installed with Internal Finisher SR3130.

Paper Tray & Optional Accessories

Item/Description	Item #	Thumbnail
Paper Feed Unit PB3160 Provides an additional 1,100 sheets. Paper Sizes up to 12" x 18". Paper Weights up to 80 lb. Bond/166 lb. Index (300 g/m^2). Weight: 48.5 lbs. (22 kg) W × D × H (inches): 23.1 × 27 × 9.7 W × D × H (mm): 586.74 × 685.8 × 246.38	416544	

Note:
Paper Feed Unit PB3160 cannot be installed with Paper Feed Unit PB3150, Caster Table Type M3, Paper Feed LCIT PB3230, Cabinet Type F, or any related options.

LCIT RT3030 Provides an additional 1,500 sheets. Paper Sizes up to 8.5" x 11"/A4. Paper Weights up to 80 lb. Bond/166 lb. Index (300 g/m^2). Weight: 21.6 lbs. (9.8 kg) W × D × H (inches): 13.4 × 21.4 × 11.4 W × D × H (mm): 340.36 × 543.56 × 289.56 Note: 1. LCIT RT3030 cannot be installed with any of these Paper Bank options: Paper Feed Unit PB3150, Caster Table Type M3, or Cabinet Type F. 2. LCIT RT3030 must be configured with either the Paper Feed Unit PB3160 or PB3230.	416548	

Output & Finishing Options

External

Item/Description	Item #	Thumbnail
Finisher SR3210 1,000-sheet Finisher. For offices that produce collated and stapled sets of documents, the SR3210 helps shorten production time. It offers 50-sheet, multi-position stapling, mixed sized stapling, optional hole-punching, and shift-sort collating, as well as a staple-less binding capability of up to 5 sheets. Supports Paper Sizes up to 12" x 18". Weight: 60 lbs. (27 kg) W × D × H (inches): 22.2 × 24.4 × 37.8 W × D × H (mm): 563.88 × 619.76 × 960.12 Note: 1. By choosing this option, the Bridge Unit BU3070 will be added to your configuration. 2. One of the following Paper Feed Units must be selected to add this finisher: Paper Feed Unit PB3160, Paper Feed LCIT PB3230, or Cabinet Type F. 3. Finisher SR3210 cannot be installed with these options: Paper Feed Unit PB3150, Caster Table Type M3, Internal Shift Tray SH3070, Internal Finisher SR3130, Finisher SR3230, Booklet Finisher SR3220, Booklet Finisher SR3240, or any related options.	417483	

Bridge Unit BU3070 A required accessory when the main unit is configured with an external finisher. The Bridge Unit transports pages from the standard exit area into a Finisher for online stapling or hole-punching. Note: One of the following finishers must be selected to add this option: Finisher SR3210, Finisher SR3230, Booklet Finisher SR3220, or Booklet Finisher SR3240.	417587	

Hole-Punching

Item/Description	Item #	Thumbnail
Punch Unit PU3050 NA Optional hole punching for the Finisher SR3210 or Booklet Finisher SR3220. Supports Paper Sizes up to 11" x 17". Note: 1. Finisher SR3210 or Booklet Finisher SR3220 must be selected to add this option. 2. Punch Unit PU3050 NA cannot be installed with the Internal Finisher SR3130, Finisher SR3230, or Booklet Finisher SR3240.	416609	

Print/Scan Options

Network Environment

Item/Description	Item #	Thumbnail
PostScript3 Unit Type M19 Recommended for printing more complex color and PDF files. Note: PostScript3 Unit Type M19 cannot be installed with Color Controller E-23C or any related options.	417504	Adobe® PostScript® 3™

Fax Options

Item/Description	Item #	Thumbnail
Fax Option Type M20 Installation required to enable fax services: 33.6 kbps, approximately 2 second transmission speed, standard JBIG, and standard 320 Pages Memory. Includes standard Internet Fax (T.37), LAN Fax, IP-Fax (T.38), Fax Forwarding to Email & Paperless Fax function.	417531	

Ricoh is committed to creating value for our customers through the production of top quality products, services and solutions that directly meet the needs of today's communication intensive business environments. As a result, we offer a range of Multifunction products with advanced scanning and printing software options that help boost productivity and improve workflow by enhancing the user experience. Visit Ricoh-USA.com for more information.

We offer a variety of services and solutions to meet diverse and challenging business needs. To find out more information, visit solutions.ricoh-usa.com

The content on this site, and the appearance, features and specifications of Ricoh products and services are subject to change from time to time without notice. Products are shown with optional features. While care has been taken to ensure the accuracy of this information, Ricoh makes no representation or warranties about the accuracy, completeness or adequacy of the information contained herein, and shall not be liable for any errors or omissions in these materials. Actual results will vary depending upon use of the products and services, and the conditions and factors affecting performance. The only warranties for Ricoh products and services are as set forth in the express warranty statements accompanying them.

Ricoh USA, Inc., 70 Valley Stream Parkway, Malvern, PA 19355, 1-800-63-RICOH. ©2019 Ricoh USA, Inc. All rights reserved. Ricoh® and the Ricoh Logo are registered trademarks of Ricoh Company, Ltd. All other trademarks are the property of their respective owners.

RICOH
imagine. change.

POWERSHRED® 125Ci

Professional Cross Cut Shredder with 100% Jam Proof System For 3-5 users

- 100% Jam Proof eliminates paper jams and powers through tough jobs
- SilentShred® Technology minimises disruption in shared work spaces
- SafeSense® Technology immediately stops shredding when hands touch the paper entry
- Energy savings system reduces in-use energy consumption and powers down after 2 minutes of inactivity
- Extended runtime of 45 minutes for high volume shredding
- Sleek, modern design
- Shreds 18 sheets of A4 paper per pass into 3.9 x 38mm cross cut particles
- Shreds credit cards, staples, paperclips and CDs
- 49L pull-out bin for easy emptying
- 2 year full warranty/ 20 year cutter warranty



Unique features

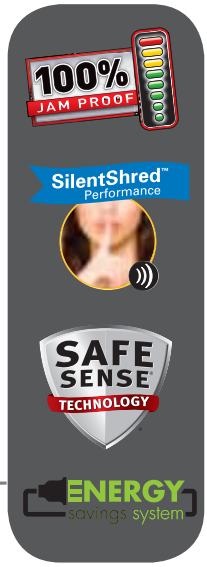

SPECIFICATIONS

Model Name	Sheet Capacity	Cut Type	Cut Size / mm	Throat width	Security Level	Bin Capacity	Run Time	Also Shreds	Warranty
125Ci	18	Cross-Cut	3.9 x 38	230	DIN 3	49 L	30-45 mins		2/20 yr

3763

POWERSHRED® 125Ci

Unique Features





How the 100% Jam Proof System works:

The shredder electronically measures paper thickness to prevent jams
Watch the light bar while you shred:

- Green-Yellow = within shredder capabilities
- Red = overfeeding, remove excess paper to continue

If a misfeed occurs our 100% Jam Proof System will power through it!

100% JAM PROOF

100% Jam Proof eliminates paper jams and powers through tough jobs

SilentShred™ Performance

SilentShred® Technology minimises disruption in shared work spaces

SAFE SENSE TECHNOLOGY

SafeSense® Technology immediately stops shredding when hands touch the paper entry

ENERGY savings system

Energy savings system reduces in-use energy consumption and powers down after 2 min of inactivity

LOGISTICS

Model Name	Country version	Item Number	Retail Barcode	Outer Barcode	Product Dim (mm)	Product Weight (kg)	Outer Dim (mm)	Outer Weight (kg)
125Ci	EU UK CH ZA	4612001 4612101 4612701 4612601	043859628032 043859628049 043859632237 043859628094	50043859628037 50043859628044 50043859632232 50043859628099	732 x 280 x 520	26.74	845 x 400 x 645	29.84

3764

POWERSHRED® 225 Series

Commercial Shredder

Advanced Jam Prevention

Eliminates paper jams and powers through tough jobs

Ultra-Quiet
Offers ultra-quiet performance for shared workspaces

Energy Saving
Reduces energy consumption by up to 70%*

Advanced Safety
Stops shredding when hands touch the paper opening



Specifications

Model #	225Ci	225i
Item	3825001	3322001
Sheets/Pass	20	20
Cut Type	Cross-Cut	Strip-Cut
Security	Level 3	Level 2
Cut Size	5/32" x 1½"	7/32"
Users	3-5	
Max Run Time	Continuous	
Bin Capacity	16 Gallons	
Bin Type	Removable Basket	
Throat Width	9.5"	
Dimensions	38.5"H x 17.4"W x 17.75"D	
Also Shreds		
Warranty	2-year product and service plus lifetime on cutters	

*Compared to conventional commercial shredders during normal usage

Fellowes

Powershred® 425Ci/425i/485Ci/485i
The World's Toughest Shredders®



PLEASE READ THESE INSTRUCTIONS BEFORE USE.
DO NOT DISCARD: KEEP FOR FUTURE REFERENCE.

VEUILLEZ LIRE CES INSTRUCTIONS AVANT D'UTILISER L'APPAREIL.
NE PAS JETER : CONSERVER AFI N DE CONSULTER LES DIRECTIVES ULTÉRI-EUREMENT, EN CAS DE BESOIN.

LEA ESTAS INSTRUCCIONES ANTES DEL USO.
NO LAS DESECHE: CONSÉRVELAS COMO REFERENCIA FUTURA.

ENGLISH

Models 425Ci/425i/485Ci/485i



KEY

A. SafeSense® Technology
B. Paper entry
C. CD, credit card and junk mail entry
D. Door
E. Casters
F. See safety instructions
G. Disconnect power switch
   ○ 1. OFF
   I 2. ON
H. Oil reservoir
   425Ci and 485Ci only
I. Oil drain plug (inside)
   425Ci and 485Ci only
J. Basket
K. Accessory tray
L. Control panel
   1. Sheet capacity indicator
   2. Low oil indicator (red)
      425Ci and 485Ci only
   3. Bin full (red)
   4. SafeSense® (yellow)
   5. Remove paper (red)
   6. Door open (red)
   7. Straight feed (red)
   8. Auto button
   9. Reverse
   10. ON/OFF (blue)
   11. Forward

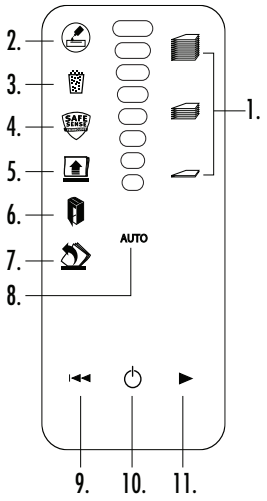

CAPABILITIES

Will shred: Paper, 132 column continuous form, plastic credit cards, CD/DVDs, staples, paper clips and junk mail

Will not shred: Adhesive labels, transparencies, newspaper, cardboard, large paper clips, laminates, file folders, X-rays or plastic other than noted above

Paper shred size:

Cross-Cut (425Ci, 485Ci).....5/32 in. x 1-1/8 in. (4mm x 30mm)
Strip-Cut (425i, 485i).....7/32 in. (5.8mm)

Maximum:

Sheets per pass (Cross-cut)..... 30*
Sheets per pass (Strip-cut) 38*
CDs/Cards per pass 1*
Paper entry width (485Ci, 485i) .....16 in. (407mm)
Paper entry width (425Ci, 425i) .....12 in. (305mm)

*8.5"x11", 20lb., (75g) paper at 120V, 60 Hz, 12Amps; heavier paper, humidity or other than rated voltage may reduce capacity. Maximum recommended daily usage rates: 11,000 (425Ci/485Ci) / 10,000 (425i/485i) sheets, 500 credit cards; 50 CDs.

Fellowes SafeSense® shredders are designed to be operated in office environments ranging between 50 – 80 degrees Fahrenheit (10 – 26 degrees Celsius) and 40 – 80% relative humidity.

⚠ WARNING: IMPORTANT SAFETY INSTRUCTIONS — Read Before Using!

- Operation, maintenance, and service requirements are covered in the instruction manual. Read the entire instruction manual before operating shredders.
- Keep away from children and pets. Keep hands away from paper entry. Always set to off or unplug when not in use.
- Keep foreign objects – gloves, jewelry, clothing, hair, etc. – away from shredder openings. If object enters top opening, switch to Reverse (⏮) to back out object.
- Never use aerosol products, petroleum based lubricants or other flammable products on or near shredder. Do not use canned air on shredder.
- Do not use if damaged or defective. Do not disassemble shredder. Do not place near or over heat source or water.
- This shredder has a Disconnect Power Switch (G) that must be in the ON (I) position to operate shredder. In case of emergency, move switch to OFF (O) position. This action will stop shredder immediately.
- Avoid touching exposed cutting blades under shredder head.
- Use only designated entry for CDs/cards. Keep fingers away from CD entry.
- Do not put foreign objects in paper entry.
- Shredder must be plugged into a properly grounded wall outlet or socket of the voltage and amperage designated on the label. The grounded outlet or socket must be installed near the equipment and easily accessible. Energy converters, transformers, or extension cords should not be used with this product.
- FIRE HAZARD – Do NOT shred greeting cards with sound chips or batteries.
- For indoor use only.
- Unplug shredder before cleaning or servicing.

BASIC SHREDDING OPERATION

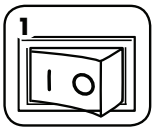

Plug in and put disconnect power switch in ON (I) position

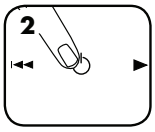

Press (⏻) ON/OFF to activate (blue)

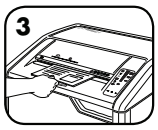

Feed paper into paper entry and release

or



Feed CD, credit card or junk mail into designated entry and release

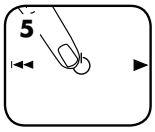

Set to Off (⏻) or shredder will automatically go into sleep mode after 2 minutes of inactivity

ADVANCED PRODUCT FEATURES

100% JAM PROOF

Jam Proof System
Eliminates paper jams and powers through tough jobs.

AUTO OIL

Auto Oil™
Lubricates the cutters automatically to enhance performance and extend shredder life.

SAFESENSE TECHNOLOGY®

SafeSense® Technology
Stops shredding immediately when hands touch the paper entry.

ENERGY SAVINGS SYSTEM™

Energy Savings System
Optimal energy efficiency 100% of the time – in use and out of use.

100% JAM PROOF SYSTEM OPERATION*

100% JAM PROOF Eliminates paper jams and powers through tough jobs.

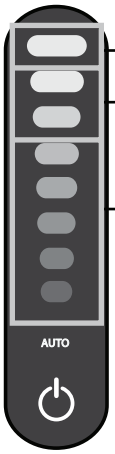

① Advanced Jam Prevention- Electronically measures paper thickness to prevent paper jams:

- Up to RED: Too many sheets have been inserted. → ② Remove several sheets until indicator is below red.
- Up to YELLOW: Productivity is optimized.
- Up to GREEN: More sheets can be added.

→ ③ Continue 100% Jam Proof Shredding (100% JAM PROOF)

If a misfeed occurs: All indicators light up and shredder pauses for 3-6 seconds → Wait for flashing to stop after automatic correction is complete. Regular shredding will resume.

If ⏏ illuminates after paper has been reversed, press reverse and remove paper. Otherwise, regular shredding will resume.

STRAIGHT FEED



If Straight Feed indicator illuminates, remove paper and feed straight into shredder.

***100% Jam Proof when used in accordance with user manual**

AUTO OIL™ OPERATION

AUTO OIL

Lubricates the cutters automatically to enhance performance and extend shredder life
(Auto oil system is only included on cross-cut models - 425Ci and 485Ci.)

SET-UP AND TESTING

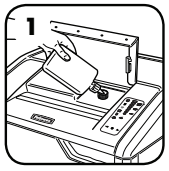

Before using, fill oil reservoir with 12 oz. (355 ml.) of Fellowes shredder oil (Fellowes #35250)



Press the auto and forward buttons at the same time for 3 seconds to manually oil shredder

REFILLING OIL

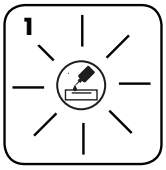

Low oil indicator will signal when your reservoir needs refilling

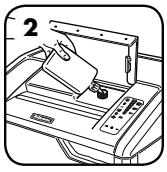

To maintain shredder performance, refill oil reservoir with up to 12 oz. (355 ml.) of shredder oil (Fellowes #35250)



Once refilled, automatic oiling will resume

ADVANCED PRODUCT FEATURES

SAFESENSE® TECHNOLOGY

Stops shredding immediately when hands touch the paper opening.

SET-UP AND TESTING

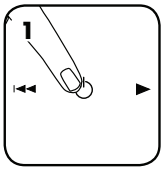

Turn the shredder ON (⏻) to activate SafeSense®

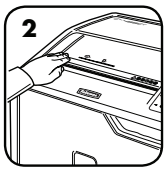

Touch test area and look for the SafeSense® indicator to illuminate

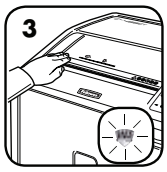

SafeSense® is active and working properly

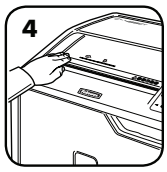

If hand is held on SafeSense® area more than 3 seconds shredder will shut off

ENERGY SAVINGS SYSTEM

Optimal energy efficiency 100% of the time – in use and out of use.

- Saves energy in four ways: energy-efficient electronics, jam prevention, standby mode and sleep mode.
- Sleep Mode shuts down shredder after 2 minutes of inactivity.

WHEN IN SLEEP MODE



In sleep mode

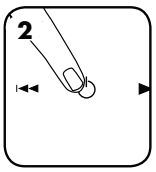

To get out of sleep mode touch control panel

or

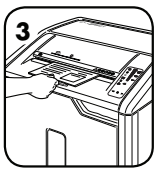

insert paper

For more information about all of Fellowes Advanced Product Features go to www.fellowes.com

PRODUCT MAINTENANCE

CLEANING AUTO-START INFRARED SENSORS

Paper detection sensors are designed for maintenance free operation. However, on rare occasions, the sensors may become blocked by paper dust causing the motor to run even if there is no paper present. (Note: two paper detection sensors are located in the center of the paper entry.)

TO CLEAN THE SENSORS

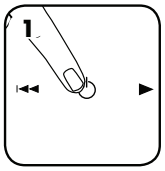

Turn off and unplug shredder



Lift CD flap



Locate Auto-start infrared sensor

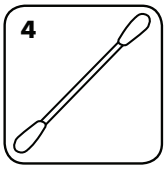

Dip cotton swab in rubbing alcohol



Using cotton swab, wipe away any contamination from the paper sensors

AUTO OIL™

Automatically oils the cutters to enhance performance and extend shredder life.
(Auto oil system is only included on cross-cut models - 425Ci and 485Ci)

REFILLING THE OIL

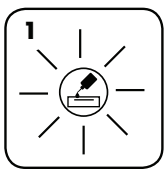

Low oil indicator will signal when your reservoir needs refilling

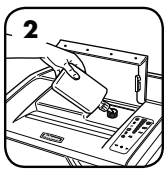

To maintain shredder performance, refill oil reservoir with up to 12 oz. (355 ml.) of shredder oil (Fellowes 35250)



Once refilled, automatic oiling will resume

- All cross-cut shredders require oil for peak performance. If not oiled, a machine may experience diminished sheet capacity, intrusive noise when shredding and could ultimately stop running. We recommend that you refill the Auto Oil™ reservoir as instructed for optimum performance.
- If shipping shredder, oil must be drained. Open cabinet door and remove basket to access oil drain plug. Place suitable container under drain, remove plug and let oil drain out. Replace plug.

TROUBLESHOOTING

Low Oil Indicator: When illuminated, the shredder is out of oil and needs to be refilled. See the Product Maintenance section for refill instructions. For optimum performance, use Fellowes oil (35250). *Auto Oil™ is only featured on cross cut models – 425Ci and 485Ci.

Bin Full Indicator: When illuminated, the shredder waste bin is full and needs to be emptied. Use Fellowes waste bag 3605801.

SafeSense® Indicator: If hands are too close to the paper entry, the SafeSense® indicator will illuminate and the shredder will stop shredding. If SafeSense® is active for 3 seconds, the shredder will automatically turn off and the user must press the power button on the control panel to resume shredding.

Remove Paper Indicator: When illuminated, press reverse (|◄◄) and remove paper. Reduce paper quantity to an acceptable amount and refeed into paper entry.

Door Open Indicator: The shredder will not run if the cabinet door is open. When illuminated, close the door to resume shredding.

Straight Feed Indicator: When illuminated, remove paper and feed straight into paper entry.

100% JAM PROOF SYSTEM OPERATION*

JAM PROOF Eliminates paper jams and powers through tough jobs.

DISABLING THE FEATURE



Should you choose to disable the system, press and hold the auto and reverse (|◄◄) buttons at the same time

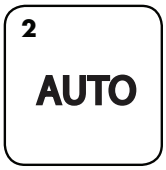

Once disabled, the blue Auto light is no longer illuminated (To re-engage, repeat step 1)

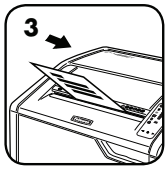

Shredding can continue with the system disabled; however, a paper jam may occur with too many sheets and Remove Paper icon ( ) will illuminate

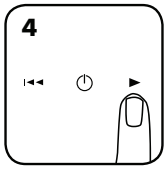

If jam occurs, press and hold forward (►) button until the document is completely through the shredder

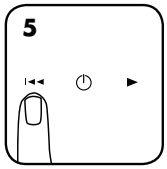

If not cleared, press reverse (|◄◄) briefly (repeat steps 4 and 5 until shredded)



If steps 4 and 5 do not clear jam, reverse paper all the way out, remove several sheets and refeed

***100% Jam Proof when used in accordance with user manual**

LIMITED PRODUCT WARRANTY

Limited Warranty: Fellowes, Inc. ("Fellowes") warrants the parts of the machine to be free of defects in material and workmanship and provides service and support for 2 years from the date of purchase by the original consumer. Fellowes warrants the cutting blades of the machine to be free from defects in material and workmanship for the lifetime of the shredder. If any part is found to be defective during the warranty period, your sole and exclusive remedy will be repair or replacement, at Fellowes' option and expense, of the defective part. This warranty does not apply in cases of abuse, mishandling, failure to comply with product usage standards, shredder operation using an improper power supply (other than listed on the label), or unauthorized repair. Fellowes reserves the right to charge the consumers for any additional costs incurred by Fellowes to provide parts or services outside of the country where the shredder is initially sold by an authorized reseller. ANY IMPLIED WARRANTY, INCLUDING THAT OF MERCHANTABILITY OR FITNESS FOR A PARTICULAR PURPOSE, IS HEREBY LIMITED IN DURATION TO THE APPROPRIATE WARRANTY PERIOD SET FORTH ABOVE. In no event shall Fellowes be liable for any consequential or incidental damages attributable to this product. This warranty gives you specific legal rights. The duration, terms, and conditions of this warranty are valid worldwide, except where different limitations, restrictions, or conditions may be required by local law. For more details or to obtain service under this warranty, please contact us or your dealer.

pitney bowes

Shipping & Mailing

SendPro® C200

Make the smart sending choice every time.

Eliminate guesswork with our all-in-one solution.

The SendPro C200 is the simplest, all-in-one technology for office mailing and package shipping. It's a complete sending solution that makes it easy to process mail and send packages all from one place. You'll be able to:

- Process daily mail and print postage quickly and accurately.
- Save on postage and get access to special discounts.
- Compare options from three major carriers, like USPS and UPS®.
- Print shipping labels for three carriers right from the system.
- Track packages and costs across three major carriers in one consolidated report.

Plus, with the integrated scale you can accurately calculate postage and shipping charges for all of your letters, flats and packages. The C200 makes it easy for your office to consistently choose the ideal mailing or shipping option.

Save money and eliminate overspend.

Using a color touchscreen display, the C200 makes your selections of carrier, class and services simple and accurate. For letter mail, simply select the postal class and services you want, then seal and print postage in one easy step. For larger items, you can compare each carrier's shipping options and print a shipping label. Plus, the C200 is digitally connected so you'll always be up-to-date with automatic postal and carrier updates, low ink alerts, service warnings and diagnostic notifications.



*Actual savings may vary depending on weight, zone and services requested.

For more information, visit us online: pitneybowes.com/us/sendpro-c-series

Make the confident choice, no matter what you send.

With the SendPro® C200, you can consistently choose the ideal carrier, class or service to get your items delivered—all at the best price for your needs. Just weigh the item to see your carrier's options with a cost and estimated delivery time. A common address book works across all three carriers and verifies the recipient addresses to ensure accurate delivery. Then, after selecting the ideal choice for your unique business needs, the C200 will print a shipping label from the attached label printer.

Ship and track from anywhere.

Access C200's shipping and tracking capabilities away from your mail area with secure access from your desktop computer. You'll always have a consolidated view of your cost history and tracking information for carrier shipments. By having multiple information on a single platform, the C200 eliminates having to use multiple carriers' websites to process a package or track a shipment.

Maximize savings every time you send.

The C200 is designed to save you and your office staff time and money in many ways. You can get automatic ink replenishments at savings of 20% off the retail price when you enroll in the AutoInk™ program. When shipping, you immediately save with USPS® shipping discounts for Priority Mail and other package services. As a certified Ready Provider of UPS®, Pitney Bowes offers savings on UPS Next Day Air® and UPS Ground Commercial and Residential.



Specifications

User display	Color touchscreen
Envelope processing	Up to 40 letters per minute; semi-automatic feeding
Envelope moistener	Standard
Integrated scale	Standard: Up to 5 lbs.
External scale	Optional
USPS retail rates and extra services	Standard; No Presort rate option
Electronic return receipt	Not available—use standard USPS return receipt
USPS shipping (Commercial Base Pricing)	Standard
Multi-carrier shipping	Optional; Use existing business account (UPS and other carrier)
Multi-user access	Optional
Shipping label printer (4" x 6")	Optional; Compliant to USPS and alternate carriers
Label and report printing	Optional: Laser printer for reports
Cost accounting	Optional: 25 accounts, and INVIEW™ Analytics web access
Connectivity	Standard: LAN (wired) or Wi-Fi (wireless)
Envelope sizes	Up to 3/8" thickness. Media sizes: 3" x 5" up to 13" x 15"
Differential weighing	Optional
Electrical and approvals	100 – 120 VAC, 50/60 Hz, 1.0A
Dimensions	16 1/2" L x 15 1/2" D x 11 1/2" H (with integrated scale)

For more information, visit us online: pitneybowes.com/us/sendpro-c-series

pitney bowes

United States
3001 Summer Street
Stamford, CT 06926-0700

RECYCLE PLEASE
recycleplease.org

Pitney Bowes, the Corporate logo, SendPro and AutoInk are trademarks of Pitney Bowes Inc. or a subsidiary.
All other trademarks are the property of their respective owners. © 2017-2018 Pitney Bowes Inc. All rights reserved.

18SMB06973_US

3769



GBC® Ultima® 35 EZload® Thermal Roll Laminator, 12" Max. Width, 1 Min Warm-Up

1701680

Each information

Depth	20.875"
Width	21.875"
Height	15.375"
Gross weight	39.8lbs
UPC#	033816054516
Unit quantity	1

Case information

Depth	20.88"
Width	21.88"
Height	15.38"
Gross weight	39.8lbs
UPC#	033816054516
Unit quantity	1

Shipping Information

Country of origin	CN
Minimum Order Quantity	1
Lowest possible unit	Each

General information

Color	120 VOLT
Layer/Pallet	3
Cases/Layer	2

Product Description

Ultima 35 desktop roll laminator delivers high quality results and features EZload technology. EZload roll film is made to ensure correct loading.

Features

- Thermal roll laminating machine with EZload technology eliminates film loading mistakes
- Compatible with 1.7 to 5 mil 12" width EZload roll film
- Fast 1 minute warm-up time
- Fixed 39" per minute laminating speed
- Laminates documents up to 11.75" wide. Leaves a small lamination film border.
- Built-in trimmer, reverse and auto shut off functions
- Limited 2-year warranty
- 18.11" x 11.14" x 16.92"

Specifications

- **Period of Warranty** Limited 2-year
- **Warranty Group** N/A
- **Speed Settings** Fixed
- **Thickness (mil)** Up to 10 mil
- **Warm-up time (minutes)** 1

Other information

- **Dimensions** 18.11" x 11.14" x 16.92"
- **Power Requirements** 120V - 60Hz 7A

Laminator.com
Your Low Price Laminating and Binding Specialists
13777 W Laurel Dr • Lake Forest, IL 60045
P: 800.323.4307 • F: 847.996.0610



600024-H

Model 600024-H
The Table provides both odor removal and versatility with height adjustment for various height students. The table top and exhaust chamber are fabricated from heavy gauge 304 stainless steel with a No. 4 finish. Ventilation across the entire work area provides a better working environment for students by removing all odors and fumes.

STANDARD DESIGN FEATURES

Length:..... 88 in./224 cm.
Height: .....34 in./86 cm. (Lowest)
Height: .....47 in./119 cm. (Highest)
Width:..... 32 in./81 cm.

- Hydraulic base assembly provides easy height adjustment via foot pedal
- 8 in./20 cm. casters, with one location wheel lock
- Removable perforated grid plate around perimeter of work surface to provide proper ventilation
- Center plenum to be located below work surface along entire length of table
- Easily removable stainless steel air distribution baffle to create uniform downdraft air velocity across entire work surface
- 6 in./20 cm. diameter exhaust connection at one or both ends of table
- Support sockets are located on all (4) corners to accommodate the optional bookstand, leg supports, and/or instrument tray holder
- Table drain pan to slope under plenum for easy drainage
- .75 in./1 cm. Ball Valve provided on drain for hose attachment and fluid control

All measurements in inches/centimeters +-



600024-H SHOWN WITH REMOVABLE HOOD (OPTIONAL)

MODEL 600024-H HYDRAULIC DISSECTION TABLE WITH EXHAUST CHAMBER

411 North Aerojet Avenue
Azusa, CA 91702
www.mortechmfg.com

(800) 410-0100
(626) 334-1471
(626) 334-1704



600024-H SHOWN WITH ACCESSORIES



Optional Features & Accessories

See pages 8-20 for a full list of sink station accessories.

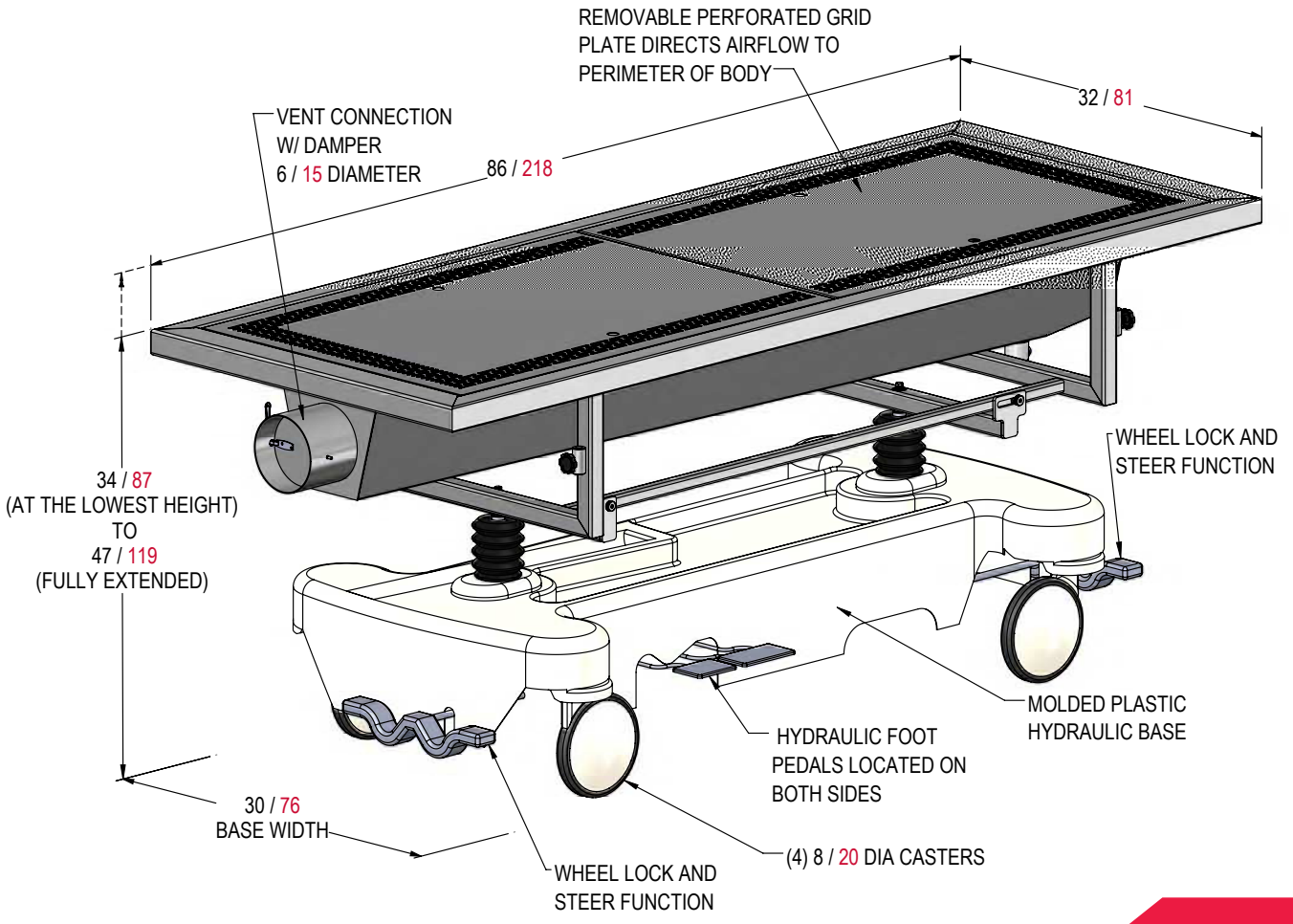

All measurements in inches/centimeters +-

MODEL 600024-H HYDRAULIC DISSECTION TABLE WITH EXAUST CHAMBER

T (800) 410-0100
T (626) 334-1471
F (626) 334-1704

411 North Aerojet Avenue
Azusa, CA 91702
www.mortechmfg.com

ANATOMY DISSECTION TABLES

OA-402 - STAINLESS STEEL LEG SUPPORTS
Units are fabricated entirely of stainless steel. The "U" shaped leg supports can be swiveled. They feature a locking knob at the pole base to hold the support pole in position. The pole is designed to be placed at any corner of the table. All dissection tables come equipped with support sockets to accept the leg support pole.



LW-175 - STAINLESS STEEL INSTRUMENT TRAY Units are fabricated entirely of stainless steel. They feature a locking knob at the pole base and at the rear of the instrument tray which allows the pole to be locked in a variety of positions. The pole is designed to be placed at any corner of the table. All dissection tables come equipped with support sockets to accept the instrument tray pole. The instrument tray is removable to carry instrument to different location and for easy cleaning.



OA-408 - HOOD LATCH FOR LOCK
Stainless steel hinge latch lock mechanism can be provided for added security as well as prevention of accidents.



OA-401 - STAINLESS STEEL OVER THE BODY BOOK HOLDER
Stainless steel book holder carries (2) books -one per side and the top can hold other miscellaneous items.

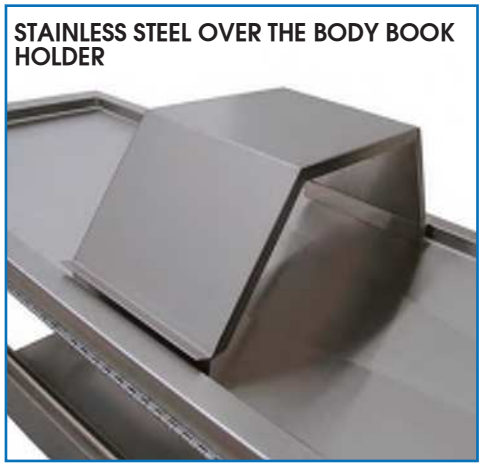

OA-400 - STAINLESS STEEL BOOK HOLDER
Stainless steel book holder supports literature for ease of viewing. They feature a locking knob at the pole base to hold the support pole in position. The pole is designed to be placed at any corner of the table. All dissection tables come equipped with support sockets to accept the leg support pole.



LW-254 - DRAIN PAIL COVER
Specially fitted cover to contain waste and debris. Allows drain hose assembly and ball valve to connect via tubing directly to the drain pail.



LW-251 - STAINLESS STEEL DRAIN PAIL
Stainless steel pails can be provided to accept table drainage. All tables come equipped with some mounting area for the pails. Mounting types include: lower shelves, hook on underside of table or drop-in-pail holders. Type of table will determine which type of holder can be used.



OA-127 - STAINLESS STEEL DRAWER ASSEMBLY All stainless steel construction. Drawer heads are thick double pan construction with an insulated core. Drawers have internal stops to prevent accidental withdrawal. Drawers are equipped with full extension, ball bearing suspensions, with a capacity load of 100 lbs./45 kg. per drawer.



OA-413 - CHEMICAL COLLECTION BOTTLE
5 Gallon chemical resistant bottle held in place with stainless steel bottle holder. Also features a quick release hose for easy replacement.



OPTIONAL DISSECTION TABLES FEATURES

411 North Aerojet Avenue
Azusa, CA 91702
www.mortechmfg.com

(800) 410-0100
(626) 334-1471
(626) 334-1704

midmark™

6211 Secure Laptop Workstation

- **Capacity**
  20 lb max weight.

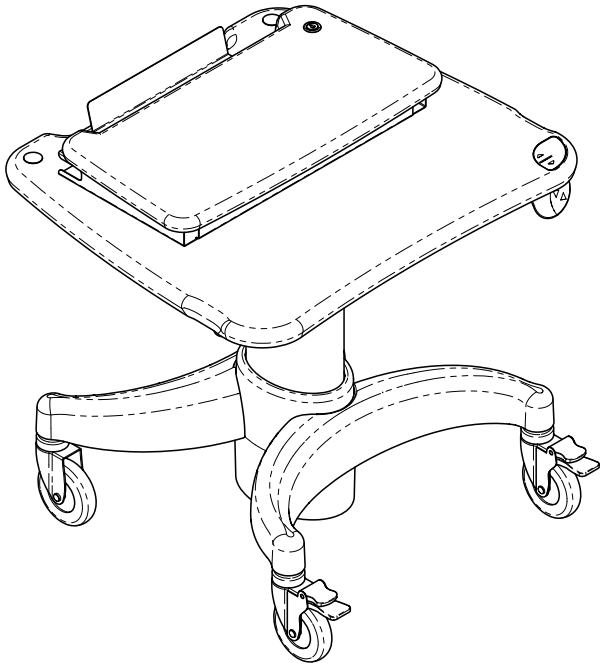

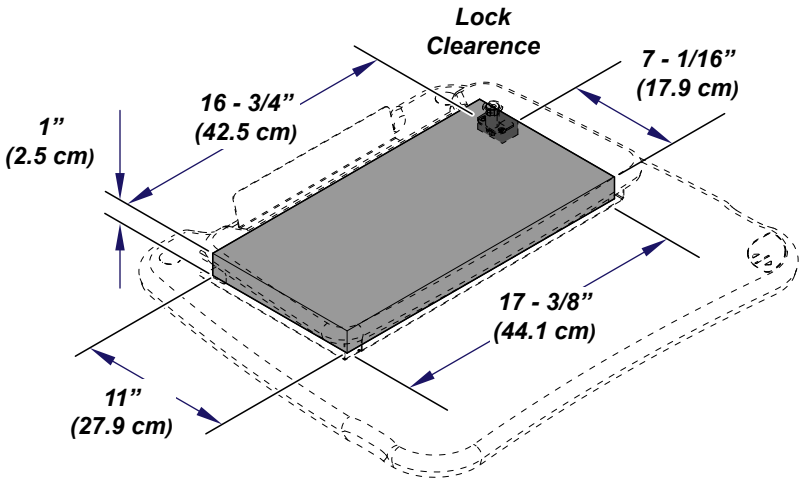

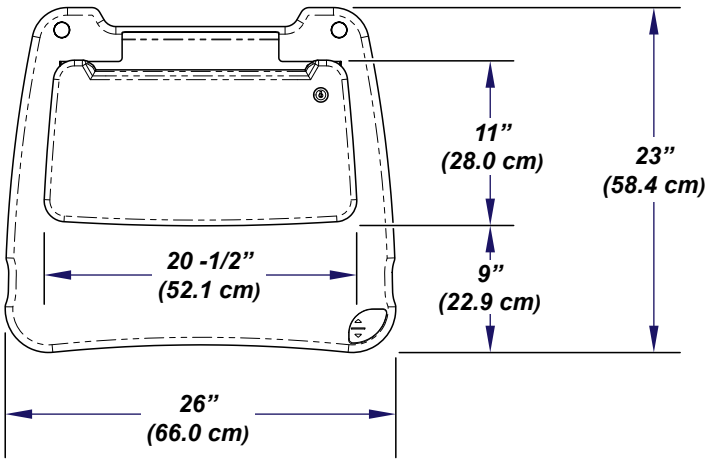

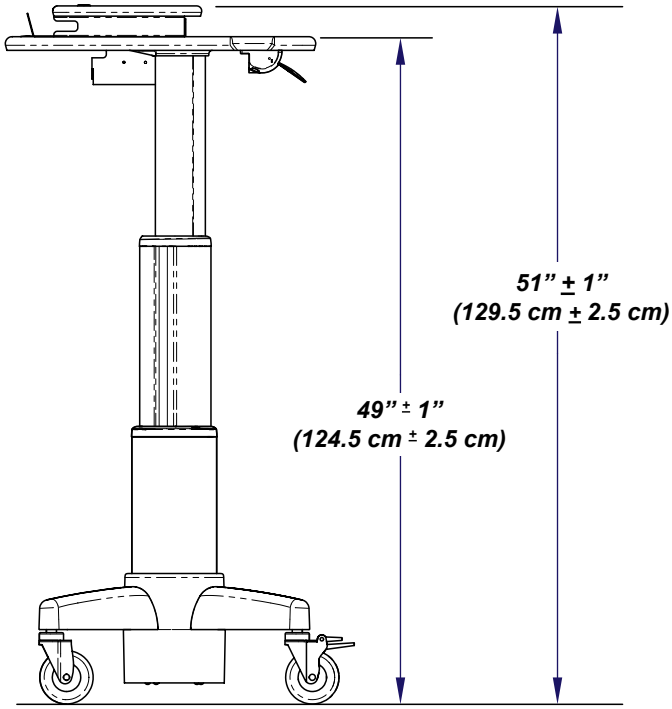

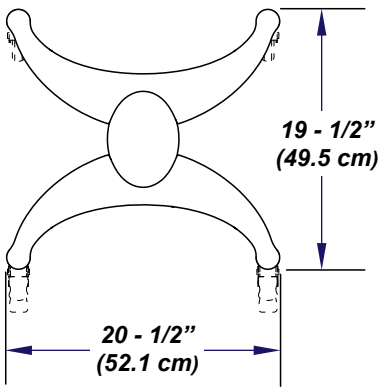

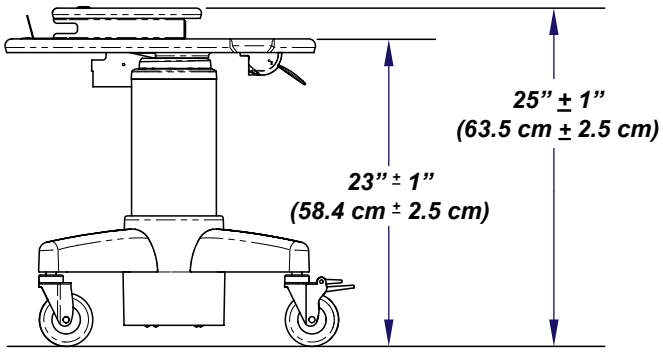

MA11101i

© 2018 Midmark Corp. | 60 Vista Drive Versailles, OH 45380 USA | 1-800-643-6275 | 1-937-526-3662 | midmark.com TP212 20-42-FO-00023 Rev A1 C2169 **004-10140-00 Rev. AA1 (11/29/18)**

3903v

Summary - Requisition 120939163

General

Status	✓ Completed (7/23/2019 10:54 AM)
Submitted	7/22/2019 3:27 PM
Cart Name	Tara Jackson Laptop 7.22.19
Description	
Purchase Order	P1205555 P1205556
Requester	Scott Dipboye
Priority	Normal
Shopper	Tara Coe
Employee Family Owned Business	✗
Non Tax-Exempt	✗
Purchasing Contact	*no value*
Original Bid or Contract #	*no value*
Bid Code	*no value*
Campus Code	7 Center for Health Sciences
Board Approval	*no value*
Contract For Signature Attached	✗
Selling Goods or Services?	✗
Cost Match Invoices Only?	✗
PO Distribution Bypass	✗

Shipping

Ship To

Attn: Tara Coe
Room/Blg G64
Dept 170103 - Information Technology
OK State Univ
1111 W 17TH ST
TULSA, OK 74107
United States

Delivery Options

Expedite	✗
Ship Via	Best Carrier-Best Way
Requested Delivery Date	

Billing

Bill To

OK Corral
Oklahoma State University in Tulsa
OSU Budget and Finance
tulacct@okstate.edu
700 N Greenwood
Tulsa, OK 74106
United States

Credit Card Info

No credit card has been assigned.

Billing Options

Fiscal Year (Prior Purchasing approval required if selecting next fiscal year.)	20 2020
Received Purchasing approval prior to submitting requisition for next fiscal period.	✗

Accounting Codes

Chart	Fund	Commodity	Account
7 Center for Health Sciences	161300-7 Project Echo	Computer Hardware Computer Hardware	704001 Noninv.D/P Equip

Internal Notes and Attachments

Internal Note	*no note*
Internal Attachments	
PO Type	*no value*

PO Clauses

PO Clauses

-18 Non-Appropriation
-19 Payment Terms
-9 FOB

Powered by JAGGAER | Privacy Policy

3903v

Work Order #	*no value*
Phase #	*no value*

Supplier / Line Item Details

Dell Inc

Contract	*no value*
PO Number	P1205556
Quote number	

	Product Description	Catalog No	Size / Packaging	Unit Price	Quantity	Ext. Price
1	**01:00 Dell Latitude 5590;Dell Latitude 5590 XCTO**	**210-ANMY**	**EA**	**1,077.42 USD**	**1 EA**	**1,077.42 USD**

Manufacturer Name	Dell	AIM Part #	*no value*	Internal Note	*no note*
Manufacturer Part Number	210-ANMY	AIM Bin #	*no value*	Internal Attachments	
Supplier Part Auxiliary ID	1023007476915 \1	External Note	*no note*	PO Clauses	
		Attachments for supplier	Supplier does not support attachments	*no clause*	

	Product Description	Catalog No	Size / Packaging	Unit Price	Quantity	Ext. Price
2	**01:01 Processor:IntelREG Core™ i5-7200U (Dual Core, 2.5GHz, 3M cache, 15W) supports only Windows 10/Linux**	**379-BCPS**	**EA**	**0.00 USD**	**1 EA**	**0.00 USD**

Manufacturer Name	Dell	AIM Part #	*no value*	Internal Note	*no note*
Supplier Part Auxiliary ID	1023007476915 \1SUBITEM	AIM Bin #	*no value*	Internal Attachments	
		External Note	*no note*	PO Clauses	
		Attachments for supplier	Supplier does not support attachments	*no clause*	

	Product Description	Catalog No	Size / Packaging	Unit Price	Quantity	Ext. Price
3	**01:02 Operating System:Windows 10 Pro 64bit English, French, Spanish**	**619-AHKN**	**EA**	**0.00 USD**	**1 EA**	**0.00 USD**

Manufacturer Name	Dell	AIM Part #	*no value*	Internal Note	*no note*
Supplier Part Auxiliary ID	1023007476915 \1SUBITEM	AIM Bin #	*no value*	Internal Attachments	
		External Note	*no note*	PO Clauses	
		Attachments for supplier	Supplier does not support attachments	*no clause*	

	Product Description	Catalog No	Size / Packaging	Unit Price	Quantity	Ext. Price
4	**01:03 Microsoft Office:No Productivity Software**	**630-AAPK**	**EA**	**0.00 USD**	**1 EA**	**0.00 USD**

Powered by JAGGAER | Privacy Policy

3903v

	Manufacturer Name	Dell	AIM Part #	*no value*	Internal Note	*no note*		
			AIM Bin #	*no value*	Internal Attachments			
	Supplier Part Auxiliary ID	1023007476915 \1SUBITEM	External Note	*no note*	PO Clauses			
			Attachments for supplier	Supplier does not support attachments	*no clause*			
5	✓ **01:04 Graphics:IntelREG 7th Gen Core™ i5-7200U (Dual Core, 2.5GHz, 3M cache, 15W) with Intel HD 620 Graphics**		**338-BPZQ**	**EA**	**0.00 USD**	**1 EA**	**0.00 USD**	
	Manufacturer Name	Dell	AIM Part #	*no value*	Internal Note	*no note*		
			AIM Bin #	*no value*	Internal Attachments			
	Supplier Part Auxiliary ID	1023007476915 \1SUBITEM	External Note	*no note*	PO Clauses			
			Attachments for supplier	Supplier does not support attachments	*no clause*			
6	✓ **01:05 Systems Management:No Out-of-Band Systems Management**		**631-ABNR**	**EA**	**0.00 USD**	**1 EA**	**0.00 USD**	
	Manufacturer Name	Dell	AIM Part #	*no value*	Internal Note	*no note*		
			AIM Bin #	*no value*	Internal Attachments			
	Supplier Part Auxiliary ID	1023007476915 \1SUBITEM	External Note	*no note*	PO Clauses			
			Attachments for supplier	Supplier does not support attachments	*no clause*			
7	✓ **01:06 Memory:8GB 1x8GB DDR4 2400MHz Non-ECC**		**370-ADIB**	**EA**	**0.00 USD**	**1 EA**	**0.00 USD**	
	Manufacturer Name	Dell	AIM Part #	*no value*	Internal Note	*no note*		
			AIM Bin #	*no value*	Internal Attachments			
	Supplier Part Auxiliary ID	1023007476915 \1SUBITEM	External Note	*no note*	PO Clauses			
			Attachments for supplier	Supplier does not support attachments	*no clause*			
8	✓ **01:07 Hard Drive:M.2 256GB PCIe NVMe Class 40 Solid State Drive**		**575-BBPR**	**EA**	**0.00 USD**	**1 EA**	**0.00 USD**	
	Manufacturer Name	Dell	AIM Part #	*no value*	Internal Note	*no note*		
			AIM Bin #	*no value*	Internal Attachments			
	Supplier Part Auxiliary ID	1023007476915 \1SUBITEM	External Note	*no note*	PO Clauses			
			Attachments for supplier	Supplier does not support attachments	*no clause*			

Powered by JAGGAER | Privacy Policy

3903v

9	✓ **01:08 LCD:15.6" HD 1366 x 768 Anti-Glare Non-Touch , Camera and Microphone, WLAN Capable**	**391-BDKM**	**EA**	**0.00 USD**	**1 EA**	**0.00 USD**

Manufacturer Name	Dell	AIM Part #	*no value*	Internal Note	*no note*
		AIM Bin #	*no value*	Internal Attachments	
Supplier Part Auxiliary ID	1023007476915 \1SUBITEM	External Note	*no note*	PO Clauses	
		Attachments for supplier	Supplier does not support attachments		*no clause*

10	✓ **01:09 Keyboard:Dual Pointing English Keyboard**	**583-BEFB**	**EA**	**0.00 USD**	**1 EA**	**0.00 USD**

Manufacturer Name	Dell	AIM Part #	*no value*	Internal Note	*no note*
		AIM Bin #	*no value*	Internal Attachments	
Supplier Part Auxiliary ID	1023007476915 \1SUBITEM	External Note	*no note*	PO Clauses	
		Attachments for supplier	Supplier does not support attachments		*no clause*

11	✓ **01:10 Mouse:No Mouse Selected**	**570-AADK**	**EA**	**0.00 USD**	**1 EA**	**0.00 USD**

Manufacturer Name	Dell	AIM Part #	*no value*	Internal Note	*no note*
		AIM Bin #	*no value*	Internal Attachments	
Supplier Part Auxiliary ID	1023007476915 \1SUBITEM	External Note	*no note*	PO Clauses	
		Attachments for supplier	Supplier does not support attachments		*no clause*

12	✓ **01:11 Driver:Wireless Driver, DW1820AC WLAN card**	**555-BDUK**	**EA**	**0.00 USD**	**1 EA**	**0.00 USD**

Manufacturer Name	Dell	AIM Part #	*no value*	Internal Note	*no note*
		AIM Bin #	*no value*	Internal Attachments	
Supplier Part Auxiliary ID	1023007476915 \1SUBITEM	External Note	*no note*	PO Clauses	
		Attachments for supplier	Supplier does not support attachments		*no clause*

13	✓ **01:12 Wireless:QualcommREG QCA61x4A 802.11ac Dual Band (2x2) Wireless Adapter+ Bluetooth 4.1**	**555-BCMW**	**EA**	**0.00 USD**	**1 EA**	**0.00 USD**

Powered by JAGGAER | Privacy Policy

3903v

	Manufacturer Name	Dell	AIM Part #	*no value*	Internal Note	*no note*		
			AIM Bin #	*no value*	Internal Attachments			
	Supplier Part Auxiliary ID	1023007476915 \1SUBITEM	External Note	*no note*	PO Clauses			
			Attachments for supplier	Supplier does not support attachments	*no clause*			
14	✓ **01:13 Mobile Broadband:No Wireless WAN Card**		**362-BBBB**	**EA**	**0.00 USD**	**1 EA**	**0.00 USD**	
	Manufacturer Name	Dell	AIM Part #	*no value*	Internal Note	*no note*		
			AIM Bin #	*no value*	Internal Attachments			
	Supplier Part Auxiliary ID	1023007476915 \1SUBITEM	External Note	*no note*	PO Clauses			
			Attachments for supplier	Supplier does not support attachments	*no clause*			
15	✓ **01:14 Primary Battery:3 Cell 51Whr ExpressCharge™ Capable Battery**		**451-BBXU**	**EA**	**0.00 USD**	**1 EA**	**0.00 USD**	
	Manufacturer Name	Dell	AIM Part #	*no value*	Internal Note	*no note*		
			AIM Bin #	*no value*	Internal Attachments			
	Supplier Part Auxiliary ID	1023007476915 \1SUBITEM	External Note	*no note*	PO Clauses			
			Attachments for supplier	Supplier does not support attachments	*no clause*			
16	✓ **01:15 Power Supply:65W AC Adapter, 7.4mm Barrel**		**492-BBXF**	**EA**	**0.00 USD**	**1 EA**	**0.00 USD**	
	Manufacturer Name	Dell	AIM Part #	*no value*	Internal Note	*no note*		
			AIM Bin #	*no value*	Internal Attachments			
	Supplier Part Auxiliary ID	1023007476915 \1SUBITEM	External Note	*no note*	PO Clauses			
			Attachments for supplier	Supplier does not support attachments	*no clause*			
17	✓ **01:16 PalmRest:Dual Pointing Palmrest with No Security**		**346-BCPD**	**EA**	**0.00 USD**	**1 EA**	**0.00 USD**	
	Manufacturer Name	Dell	AIM Part #	*no value*	Internal Note	*no note*		
			AIM Bin #	*no value*	Internal Attachments			
	Supplier Part Auxiliary ID	1023007476915 \1SUBITEM	External Note	*no note*	PO Clauses			
			Attachments for supplier	Supplier does not support attachments	*no clause*			

Powered by JAGGAER | Privacy Policy

3903v

18	✓ **01:17 Security Software:No Security Software**	**650-AAAM**	**EA**	**0.00 USD**	**1 EA**	**0.00 USD**

Manufacturer Name	Dell	AIM Part #	*no value*	Internal Note	*no note*
Supplier Part Auxiliary ID	1023007476915 \1SUBITEM	AIM Bin #	*no value*	Internal Attachments	
		External Note	*no note*	PO Clauses	
		Attachments for supplier	⚠ Supplier does not support attachments	*no clause*	

19	✓ **01:18 Operating System Recovery Options:No Media**	**620-AAOH**	**EA**	**0.00 USD**	**1 EA**	**0.00 USD**

Manufacturer Name	Dell	AIM Part #	*no value*	Internal Note	*no note*
Supplier Part Auxiliary ID	1023007476915 \1SUBITEM	AIM Bin #	*no value*	Internal Attachments	
		External Note	*no note*	PO Clauses	
		Attachments for supplier	⚠ Supplier does not support attachments	*no clause*	

20	✓ **01:19 Docks and Port Replicators:No Docking Station**	**452-BBSE**	**EA**	**0.00 USD**	**1 EA**	**0.00 USD**

Manufacturer Name	Dell	AIM Part #	*no value*	Internal Note	*no note*
Supplier Part Auxiliary ID	1023007476915 \1SUBITEM	AIM Bin #	*no value*	Internal Attachments	
		External Note	*no note*	PO Clauses	
		Attachments for supplier	⚠ Supplier does not support attachments	*no clause*	

21	✓ **01:20 FGA Module:No FGA**	**817-BBBB**	**EA**	**0.00 USD**	**1 EA**	**0.00 USD**

Manufacturer Name	Dell	AIM Part #	*no value*	Internal Note	*no note*
Supplier Part Auxiliary ID	1023007476915 \1SUBITEM	AIM Bin #	*no value*	Internal Attachments	
		External Note	*no note*	PO Clauses	
		Attachments for supplier	⚠ Supplier does not support attachments	*no clause*	

22	✓ **01:21 Cable:Power Cord, US**	**450-AAEJ**	**EA**	**0.00 USD**	**1 EA**	**0.00 USD**

Manufacturer Name	Dell	AIM Part #	*no value*	Internal Note	*no note*
		AIM Bin #	*no value*	Internal Attachments	

Powered by JAGGAER | Privacy Policy

	Supplier Part Auxiliary ID	1023007476915 \1SUBITEM	External Note	*no note*	PO Clauses			
			Attachments for supplier	Supplier does not support attachments	*no clause*			

23	✓	**01:22 Non-Microsoft Application Software:Windows System Software**	**658-BDTQ**	**EA**	**0.00 USD**	**1 EA**	**0.00 USD**	
	Manufacturer Name	Dell	AIM Part #	*no value*	Internal Note	*no note*		
			AIM Bin #	*no value*	Internal Attachments			
	Supplier Part Auxiliary ID	1023007476915 \1SUBITEM	External Note	*no note*	PO Clauses			
			Attachments for supplier	Supplier does not support attachments	*no clause*			

24	✓	**01:23 Carrying Cases:No Carrying Case**	**460-BBEX**	**EA**	**0.00 USD**	**1 EA**	**0.00 USD**	
	Manufacturer Name	Dell	AIM Part #	*no value*	Internal Note	*no note*		
			AIM Bin #	*no value*	Internal Attachments			
	Supplier Part Auxiliary ID	1023007476915 \1SUBITEM	External Note	*no note*	PO Clauses			
			Attachments for supplier	Supplier does not support attachments	*no clause*			

25	✓	**01:24 Removable CD/DVD Drives:No Removable CD/DVD Drive**	**429-AATO**	**EA**	**0.00 USD**	**1 EA**	**0.00 USD**	
	Manufacturer Name	Dell	AIM Part #	*no value*	Internal Note	*no note*		
			AIM Bin #	*no value*	Internal Attachments			
	Supplier Part Auxiliary ID	1023007476915 \1SUBITEM	External Note	*no note*	PO Clauses			
			Attachments for supplier	Supplier does not support attachments	*no clause*			

26	✓	**01:25 TAA:No TAA**	**340-ACQQ**	**EA**	**0.00 USD**	**1 EA**	**0.00 USD**	
	Manufacturer Name	Dell	AIM Part #	*no value*	Internal Note	*no note*		
			AIM Bin #	*no value*	Internal Attachments			
	Supplier Part Auxiliary ID	1023007476915 \1SUBITEM	External Note	*no note*	PO Clauses			
			Attachments for supplier	Supplier does not support attachments	*no clause*			

27	✓			**EA**	**0.00 USD**	**1 EA**	**0.00 USD**	

owered by ... Privacy Policy

3903v

01:26 Canada Ship Options:US No Canada Ship Charge **332-1286**

Manufacturer Name	Dell	AIM Part #	*no value*	Internal Note	*no note*
		AIM Bin #	*no value*	Internal Attachments	
Supplier Part Auxiliary ID	1023007476915 \1SUBITEM	External Note	*no note*	PO Clauses	
		Attachments for supplier	Supplier does not support attachments	*no clause*	

28 ✓ **01:27 Diagnostic CD / Diskette:No Resource DVD** **430-XXYG** **EA** **0.00 USD** **1 EA** **0.00 USD**

Manufacturer Name	Dell	AIM Part #	*no value*	Internal Note	*no note*
		AIM Bin #	*no value*	Internal Attachments	
Supplier Part Auxiliary ID	1023007476915 \1SUBITEM	External Note	*no note*	PO Clauses	
		Attachments for supplier	Supplier does not support attachments	*no clause*	

29 ✓ **01:28 Placemat:Quick Reference Guide** **340-BYSK** **EA** **0.00 USD** **1 EA** **0.00 USD**

Manufacturer Name	Dell	AIM Part #	*no value*	Internal Note	*no note*
		AIM Bin #	*no value*	Internal Attachments	
Supplier Part Auxiliary ID	1023007476915 \1SUBITEM	External Note	*no note*	PO Clauses	
		Attachments for supplier	Supplier does not support attachments	*no clause*	

30 ✓ **01:29 E-Star:No Energy Star** **387-BBCE** **EA** **0.00 USD** **1 EA** **0.00 USD**

Manufacturer Name	Dell	AIM Part #	*no value*	Internal Note	*no note*
		AIM Bin #	*no value*	Internal Attachments	
Supplier Part Auxiliary ID	1023007476915 \1SUBITEM	External Note	*no note*	PO Clauses	
		Attachments for supplier	Supplier does not support attachments	*no clause*	

31 ✓ **01:30 Transportation from ODM to Region:BTO Standard Shipment** **800-BBGT** **EA** **0.00 USD** **1 EA** **0.00 USD**

Manufacturer Name	Dell	AIM Part #	*no value*	Internal Note	*no note*
		AIM Bin #	*no value*	Internal Attachments	
Supplier Part Auxiliary ID	1023007476915 \1SUBITEM	External Note	*no note*	PO Clauses	

Powered by JAGGAER | Privacy Policy

3903v

Attachments for supplier: Supplier does not support attachments

no clause

32	✓	**01:31 Processor Branding:Intel Core i5 Label**	**389-BLSV**	**EA**	**0.00 USD**	**1 EA**	**0.00 USD**

Manufacturer Name: Dell
Supplier Part Auxiliary ID: 1023007476915 \1SUBITEM

AIM Part #: no value
AIM Bin #: no value
External Note: no note
Attachments for supplier: Supplier does not support attachments

Internal Note: no note
Internal Attachments
PO Clauses
no clause

33	✓	**01:32 Documentation/Disks:Safety/Environment and Regulatory Guide (English/French Multi-language)**	**340-AGIK**	**EA**	**0.00 USD**	**1 EA**	**0.00 USD**

Manufacturer Name: Dell
Supplier Part Auxiliary ID: 1023007476915 \1SUBITEM

AIM Part #: no value
AIM Bin #: no value
External Note: no note
Attachments for supplier: Supplier does not support attachments

Internal Note: no note
Internal Attachments
PO Clauses
no clause

34	✓	**01:33 UPC Label:No UPC Label**	**389-BCGW**	**EA**	**0.00 USD**	**1 EA**	**0.00 USD**

Manufacturer Name: Dell
Supplier Part Auxiliary ID: 1023007476915 \1SUBITEM

AIM Part #: no value
AIM Bin #: no value
External Note: no note
Attachments for supplier: Supplier does not support attachments

Internal Note: no note
Internal Attachments
PO Clauses
no clause

35	✓	**01:34 Label:Regulatory Label Included**	**389-BEYY**	**EA**	**0.00 USD**	**1 EA**	**0.00 USD**

Manufacturer Name: Dell
Supplier Part Auxiliary ID: 1023007476915 \1SUBITEM

AIM Part #: no value
AIM Bin #: no value
External Note: no note
Attachments for supplier: Supplier does not support attachments

Internal Note: no note
Internal Attachments
PO Clauses
no clause

Powered by JAGGAER | Privacy Policy

36	✓ 01:35 Packaging:MIX SHIP Config (DAO)	340-BYSF	EA	0.00 USD	1 EA	0.00 USD

Manufacturer Name	Dell	AIM Part #	*no value*	Internal Note	*no note*
Supplier Part Auxiliary ID	1023007476915 \1SUBITEM	AIM Bin #	*no value*	Internal Attachments	
		External Note	*no note*	PO Clauses	
		Attachments for supplier	⚠ Supplier does not support attachments	*no clause*	

37	✓ 01:36 Windows AutoPilot:No AutoPilot	340-CKSZ	EA	0.00 USD	1 EA	0.00 USD

Manufacturer Name	Dell	AIM Part #	*no value*	Internal Note	*no note*
Supplier Part Auxiliary ID	1023007476915 \1SUBITEM	AIM Bin #	*no value*	Internal Attachments	
		External Note	*no note*	PO Clauses	
		Attachments for supplier	⚠ Supplier does not support attachments	*no clause*	

38	✓ 01:37 Hardware Support Services:1 Year Hardware Warranty with Onsite/In-Home Service after Remote Diagnosis	997-8328	EA	0.00 USD	1 EA	0.00 USD

Manufacturer Name	Dell	AIM Part #	*no value*	Internal Note	*no note*
Supplier Part Auxiliary ID	1023007476915 \1SUBITEM	AIM Bin #	*no value*	Internal Attachments	
		External Note	*no note*	PO Clauses	
		Attachments for supplier	⚠ Supplier does not support attachments	*no clause*	

Supplier subtotal **1,077.42 USD**

Govconnection Inc

Contract	*no value*
PO Number	P1205555
Quote number	

	Product Description	Catalog No	Size / Packaging	Unit Price	Quantity	Ext. Price
39	✓ HTC Vive Wireless Adapter	35930700	EA	282.79 USD	2 EA	565.58 USD

Manufacturer Name	HTC	AIM Part #	*no value*	Internal Note	*no note*
Manufacturer Part Number	99HANN010-00	AIM Bin #	*no value*	Internal Attachments	
Supplier Part Auxiliary ID		External Note	*no note*	PO Clauses	
		Attachments for supplier		*no clause*	

Powered by JAGGAER | Privacy Policy

3903v

		Q||84f4b62d-09c0-42b0-bae6-42e127d5f83d		Supplier does not support attachments			

40	✓	**HTC Wireless Adaptor Vive Pro Ad**	**36804078**	**EA**	**57.85 USD**	**2 EA**	**115.70 USD**

Manufacturer Name	HTC	AIM Part #	*no value*	Internal Note	*no note*
Manufacturer Part Number	99H20571-00	AIM Bin #	*no value*	Internal Attachments	
Supplier Part Auxiliary ID	Q||84f4b62d-09c0-42b0-bae6-42e127d5f83d	External Note	*no note*	PO Clauses	*no clause*
		Attachments for supplier	Supplier does not support attachments		

Supplier subtotal	**681.28 USD**

Shipping, Handling, and Tax charges are calculated and charged by each supplier. The values shown here are for estimation purposes, budget checking, and workflow approvals.

Subtotal	**1,758.70**
Total	**1,758.70 USD**

Powered by JAGGAER | Privacy Policy

MIDMARK®

Standard Duty Wall Mounted Workstation

Healthcare is changing. Are you changing with it?

The MIDMARK® Standard Duty Wall Mounted Workstation is industry leading with over 22” of height adjustments. It is ergonomically designed to be comfortable in a seated or standing position.

FEATURES & BENEFITS:

1. **Monitor Adjustments**
   9.5” of height adjustment, 45° of tilt and 180° of rotation with the quick connect VESA for portrait to landscape viewing
2. **Keyboard Height Adjustment**
   22” of keyboard height adjustment
3. **Workstation**
   Upper level work surface for papers and small technology
4. **Compact Design**
   Stores just 9.47” off the wall with the tray flipped up, perfect for high traffic areas, hallways or patient rooms
5. **Cable Management**
   Integrated wire management system in the mounting arm for neat and quick wire installation
6. **Wall Track**
   Available in 34” length for direct to drywall applications optimizing locations with limited space
7. Compliant with TAA regulations
8. Compliant with RoHS regulations

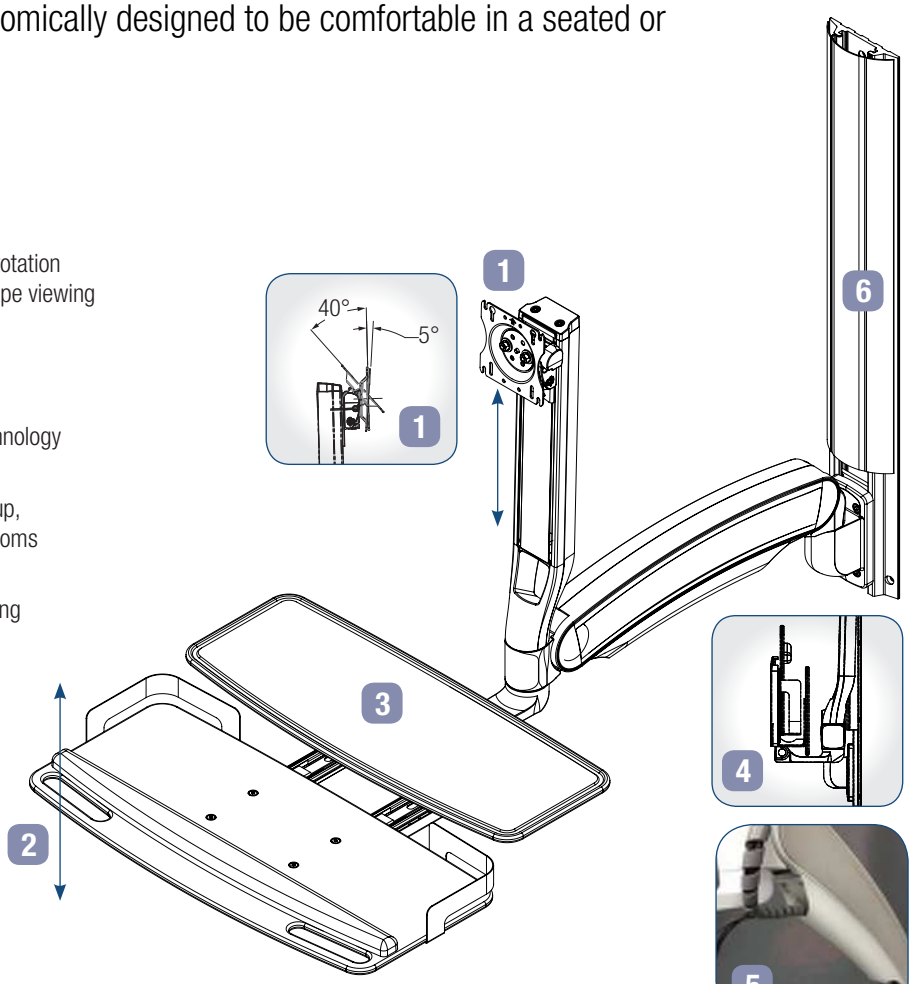

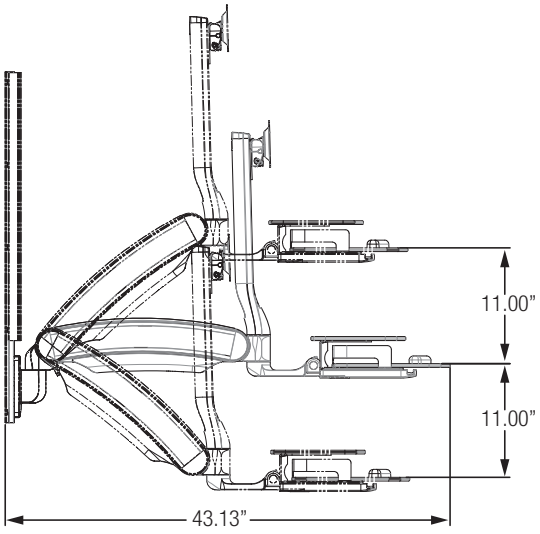

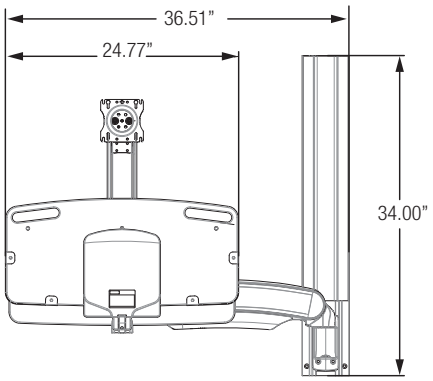



Model	Description	OPM#	Tray Width	Tray Depth	Tray Height	Weight Capacity	Mounting Standard
6282	Standard Duty Wall Mounted Workstation	0217-013	25”	10”	2.1”	5-20 lbs.	VESA 75mm/100mm

Wall units





6281
Wall mounted workstation designed for 22" of independent height adjustment for laptop and tablet-based technology components.



6282 + 6283
Standard and heavy duty wall mounted workstations designed for 22" of independent height adjustment for PC-based technology components.



ADJUSTABLE PC HOLDER*

Dimensions
10"W x 3.75"D x 7"H

TAMPER PROOF PC HOLDER*



Dimensions
15.74"W x 3.96"D x 12.13"H





EXTENSION ARM*

Dimensions
22"W x 2"D x 5.8"H

VESA MOUNT
BAR CODE HOLDER*



Dimensions
14.3"-16.2"W x 6.25"D x 4.35"H

TRACK MOUNT
BAR CODE HOLDER*



Dimensions
5"W x 4.73"D x 9"H

DUAL MONITOR ARM*



Dimensions
26.8"W x 4.6"D x 02.58"H

**Available in Mist color only*

ACCESSORIES HELP ADD VERSATILITY AND FUNCTION TO YOUR WORKSTATION

AC POWER SYSTEM



Dimensions
16.5"W x 9.5" D x 11"H
Capacity
491 WHR
Battery Technology
$LiFePO_4$ - lithium iron phosphate
Regulatory Testing
UL/IEC 60601-1 (3rd Ed.)
UL/IEC 60950-1

COILED POWER CORD



Steel Bracket (shown)
7.2"W x 1.8" D x 2.5"H
Cord Tray Bracket
2.5"W x 1.8"D x 2.5"H
Both have 8' max extension length
Medical grade cord w/ 3 AC outlets
Right + left mount available

COLUMN BASKET



Front
17.45"W x 12"D x 4.07"H
Rear
17.45"W x 12"D x 4.07"H
Dual (shown)
17.45"W x 15.68"D x 4.07"H

REAR BASKET



Dimensions
16.64"W x 6.47"D x 4"H
Capacity
5 lb max

DRAWER



Non-Locking
14"W x 10"D x 5.3"H
Keyless Lock (shown)
14"W x 10.65"D x 5.3"H

ADJUSTABLE UTILITY SHELF



Dimensions
17.63"W x12.5"D x 8.125"H
Internal depth range
8.80" min to 17.33" max
Capacity
30 lb max

SCALE HOLDER



Dimensions
14.5"W x 12.15"D x 12.25"H
Capacity
7 lb max
Right + left mount available

CPU HOLDER



Dimensions
10"W x 12.55"D (Max) x 7.25"H
Can accommodate devices from 1.27" to 3.95" thick
Can be mounted in front or rear (rear mount shown)

VOIP SHELF



Dimensions
16.25"W x 5.24"D x 6"H
Capacity
5 lb max
Right + left mount available

MOBILE PRINTER SHELF



Dimensions
14.86"W x 8.7"D x 1.5"H
Internal width range
4.29"min to 6.81"max
Capacity
5 lb max
Right + left mount available

BAR CODE HOLDER



Vesa Mount (shown)
15"W x 6.47"D x 4.35"H
w/up to 3.45" of horizontal adjustment
Surface Mount
3.11"W x 4.23"D x 3.04"H
Right + left mount available
Capacity
2 lb max weight for both options

VITAL SIGNS ACCESSORIES



Equipment Pole
19"W x 4"D x 22.5"H
Up to 18" of height adj
BP Cuff Holder
3"W x 3.1"D x 8.75"H
Vital Signs Equipment Pole Mount

DUAL MONITOR MOUNT



Dimensions
26.83"W x 2.61"D x 4.6"H
Capacity
5 lb to 15 lb max total weight
Vesa Patterns
75 mm + 100 mm
Each Vesa Plate has 7.435" of horizontal adjustment and 90° rotation capability.

LAPTOP DISPLAY HOLDER



Dimensions
7.25"W x 3.35"D x 12.52"H
Capacity
10 lb max

VESA MOUNTING PLATE



Dimensions
12.29"W x 1.88"D x 4.94"H
Capacity
5 lb max
Vesa Patterns
75 mm + 100 mm

TABLET DISPLAY HOLDER



Dimensions
6.88"W x 1.35"D x 8.14"H
Capacity
Minimum tablet weight
3.5 lb to use monitor height adjustment

COLOR OPTIONS



Dune 794

Flax 795

Nest 796

Path 798

Hewn 797

Radiance 800

Acorn 459

Henna 803

Sediment 799

Earth 487

Timber 801

Storm 802

Earthen Bronze 806

Flat Iron 807

Venus Silver 804

Fawn 490

Whisper 649

Pebble Grey 216

Frost 791

SPECIFICATIONS

NON-POWERED WORKSTATIONS

26" of height adjustment, from 23" to 49"

2 total-locking casters front; 2 nonlocking casters rear

3.94" (100 mm) oversized casters

Polished aluminum column and caster base

Worksurface dimensions:
6211 – 23" D x 26" W
6212 – 23" D x 26" W
6213 – 23" D x 26" W
6214 – 21" D x 26" W
6215 – 21" D x 26" W
6217 – 23" D x 22" W
6218 – 23" D x 22" W
6219 – 23" D x 22" W

Monitor arm (models 6212, 6213, 6218, 6219)

75 mm and 100 mm VESA mounting patterns

9.5" independent vertical adjustment + up to 40 degrees positive tilt

Capacity range 5 lb min to 20 lb max

Independent rotation of 180°

Base dimensions:
6211 – 19.5" D x 20.5" W
6212 – 22.5" D x 20.5" W
6213 – 22.5" D x 20.5" W
6214 – 19.5" D x 20.5" W
6215 – 19.5" D x 20.5" W
6217 – 19.5" D x 20.5" W
6218 – 22.5" D x 20.5" W
6219 – 22.5" D x 20.5" W

Weight limits:
6211 – 20 lb
6212 – 30 lb
6213 – 30 lb
6214 – 20 lb
6215 – 10 lb
6217 – 20 lb
6218 – 30 lb
6219 – 30 lb

ANSI/BIFMA compliant

WALL MOUNT WORKSTATIONS

6281, 6282 and 6283 have 22" of height adjustment

Worksurface dimensions:
6281 – 14" D x 19" W
6282 – 10" D x 25" W
6283 – 10" D x 25" W

Weight limits:
6281 – 0 (8 lb)
6282 – 5 (20 lb)
6283 – 2 (0-35 lb)

AC POWERED WORKSTATIONS

AC power supply complies with the following safety and environmental standards:
UL/IEC 60601-1 (3rd Ed.)
UL/IEC 60950-1

SOURCES

1 http://annals.org/aim/article/2546704/allocation-physician-time-ambulatory-practice-time-motion-study-4-specialties
2 https://uhs.princeton.edu/health-resources/ergonomics-computer-use
3 https://www.bls.gov/iif/osch0060.pdf
4 https://pdfs.semanticscholar.org/f4f4/e346b9e89655131a6dfea989af799fabb973.pdf
5 https://www.osha.gov/dcsp/smallbusiness/safetypays/estimator.html

Standalone Kiosk

For iPad, Windows & Android

Easily share & interact with your visitors.

Built from steel and unbreakable thermoplastics, our Standalone model is made to secure tablets for public use.

This freestanding kiosk features a stable, non-tip base and a large, lockable body with plenty of room for accessories and branding.



Standard Features

- Radio-transparent tablet enclosure is scratch and fingerprint-resistant.
- Powdercoated for a durable, professional finish.
- Restricts access to tablet buttons while still allowing private access without disassembly.
- Tablet can be displayed in either landscape or portrait mode.
- Secondary cable exit through the base of the kiosk for hidden AC power supply and a cordless appearance.
- Designed to meet ADA compliance.

Options

- Home button and/or camera access
- Custom powdercoat color
- Can be bolted to floor
- Wheel stand base
- Branding panels
- Vinyl body wrap
- Printer, card reader, and barcode scanner integration

Dimensions

iPad 2 - Air 2		iPad Pro		10" Android & Windows		12" Android & Windows	
w	19"	w	19"	w	19"	w	19"
d	16.5"	d	16.5"	d	16.5"	d	16.5"
h	46.5"	h	48.5"	h	47.6"	h	48"
wt	51 lb.	wt	53.4 lb.	wt	50.2 lb.	wt	52.1 lb.

Specifications

iPadKiosks.com 3909
iOS • Windows • Android
info@kioskgroup.com
(301) 732-4629

Supported Tablets

- iPad 2, 3 and 4
- iPad Air & Air 2
- iPad Pro
- Surface Pro 2 & 3
- Samsung Galaxy
- Any tablet





Accessories

- Keyboard attachment
- Headphone hook
- Audible alarm system
- Screen protector
- Brochure holder
- Signature stylus
- Remote low-voltage power
- External battery backup
- Magnetic stripe card reader shell
- Thermal printer cabinet
- Flight case

Supported Peripherals

Printers

- AirPrint enabled
- Star Micronics
- Custom America

Barcode Scanners

- UPC readers
- QR Code readers
- 2D & 3D

Card readers

- MagTek
- ID Tech
- Square

Need something special?

Just ask; we love the challenge.
If you can dream it,
we can build it.



Xerox® Phaser® 6510 Color Printer



System Specifications	Phaser 6510N	Phaser 6510DN	Phaser 6510DNI
One-sided Speed 8.5 x 11 in. A4 / 210 x 297 mm 8.5 x 14 in. / 216 x 356 mm	Up to 30 ppm color and black and white Up to 24 ppm color and black and white Up to 28 ppm color and black and white		
Two-sided Speed 8.5 x 11 in. A4 / 210 x 297 mm 8.5 x 14 in. / 216 x 356 mm	NA	Up to 18 ppm color and black and white Up to 17 ppm color and black and white Up to 19 ppm color and black and white	
Monthly Duty Cycle[1]	Up to 50,000 pages / month		
Recommended Average Monthly Print Volume[2]	Up to 3,000 pages		
Processor	733 MHz		
Memory	1 GB		
Connectivity	10/100/1000Base-T Ethernet High-Speed USB 3.0		10/100/1000Base-T Ethernet High-Speed USB 3.0 Wi-Fi 802.11n Wi-Fi Direct®
Paper Handling			
Bypass Tray			
Capacity[3]	50 sheets		
Sizes	Custom Sizes: 3 x 5 in. to 8.5 x 14 in. / 76 x 127 mm to 216 x 356 mm		
Weights	16 lb. bond to 58 lb. cover / 60 to 220 gsm		
Media Types	Bond Plain Card Stock Custom Envelopes Glossy Card Stock Hole punched Labels Letterhead Lightweight Cardstock Lightweight Glossy Card Stock Preprinted Recycled		
Tray 1			
Capacity[3]	250 sheets		
Sizes	Custom Sizes 3 x 5.8 in. to 8.5 x 14 in. / 76 x 147 mm to 216 x 356 mm		
Weights	16 lb. bond to 65 lb. cover / 60 to 176 gsm		

Xerox® Phaser® 6510 Color Printer

Media Types	Bond Plain Card Stock Custom Envelopes Glossy Card Stock Hole punched Labels Letterhead Lightweight Cardstock Lightweight Glossy Card Stock Preprinted Recycled	
Optional Tray 2		
Capacity[3]	550 sheets	
Sizes	Custom Sizes: 3 x 7.5 in. to 8.5 x 14 in. / 76 x 191 mm to 216 x 356 mm	
Weights	16 lb. bond to 65 lb. cover / 60 to 176 gsm	
Media Types	Bond Plain Card Stock Custom Glossy Card Stock Hole punched Letterhead Lightweight Cardstock Lightweight Glossy Card Stock Preprinted Recycled	
Total Capacity		
Device Standard Capacity[3]	300 sheets	
Device Total Capacity[3]	850 sheets	
Paper Output		
Output Capacity[3]	150 sheets	
Automatic 2-Sided	NA	Standard
Device Specifications		
Electrical Requirements		
North America	Voltage: 120 VAC +/- 10 % Frequency: 60 Hz +/- 3 Hz, 12A	
Europe	Voltage: 220-240 VAC +/- 10 % Frequency: 50 Hz +/- 3 Hz, 6A	
Power Consumption		
Operation[4]	120V: Maximum 380 watts 220V: Maximum 350 watts	
Standby Mode[4]	120V: Maximum 41 watts 220V: Maximum 44 watts	
Power Off Mode[4]	120V: Maximum 0.2 watts 220V: Maximum 0.3 watts	
Sleep Mode[4]	120V: Maximum 0.9 watts 220V: Maximum 1.0 watts	
Warm-up (from Sleep Mode)	As fast as 26 seconds	
Operating Environment		
Required Temperature Range Storage	-4˚F to 104˚F / -20˚C to 40˚C	

Xerox® Phaser® 6510 Color Printer

Operating	41°F to 90°F / 5°C to 32°C
Required Relative Humidity	15 % to 85 %
Sound Power Levels Operating Standby	 6.76 B or less 4.00 B or less
Sound Pressure Levels Operating Standby	 51.9 dB(A) or less 24.9 dB(A) or less
Dimensions and Weights (unpackaged)	
Phaser 6510N, and DN	Width: 16.5 in. / 420 mm Depth: 19 in. / 483 mm Height: 13.7 in. / 347 mm Weight: 52.5 lb. / 23.8 kg
Phaser 6510DNI	Width: 16.5 in. / 420 mm Depth: 19.6 in. / 499 mm Height: 13.7 in. / 347 mm Weight: 52.5 lb. / 23.8 kg
550-sheet Paper Tray	Width: 16.5 in. / 420 mm Depth: 18.3 in. / 465 mm Height: 5.9 in. / 150 mm Weight: 14.8 lb. / 6.7 kg
Dimensions and Weights (packaged)	
Phaser 6510N, DN and DNI	Width: 14.3 in. / 634 mm Depth: 22.8 in. / 580 mm Height: 19.9 in. / 505 mm Weight: 64.4 lb. / 29.2 kg
550-sheet Paper Tray	Width: 21.1 in. / 535 mm Depth: 23 in. / 584 mm Height: 9.8 in. / 248 mm Weight: 18.7 lb. / 8.5 kg
System Certification/Regulatory Compliance	
	c TUV us FCC 47CFR15-B ICES/NMB-3 “A” CE NOM EAC UkrSepro BIS GS Citrix™ Certified Cerner Apple® AirPrint® certification Google Cloud Print™ Certification Mopria® certified Wi-Fi Alliance Certified Blue Angel MEDITECH ENERGY STAR® ECOLOGO® EPEAT (United States) To view the latest list of certifications, go to www.xerox.com/OfficeCertifications.
Print	
First-print-out Time	As fast as 12 seconds color and black and white
Print Resolution	Up to 1200 x 2400 dpi
Page Description Languages	Adobe® PostScript® 3™ PCL® 5e, 6

Xerox® Phaser® 6510 Color Printer

	PDF TIFF
Maximum Print Area	4 mm edge of paper
Print Features	Banner Sheets Booklet Print Cover / Separators Draft Mode Fit to Page N-up Overlays PANTONE® Color Calibrated Solid-color Simulations Personal Print Proof Print RAM Collation Run Black Saved Print Secure Print Watermarks
Print from USB	Supports direct printing from computer via Type B USB port Supported file formats: PDF, JPEG, TIFF, XPS
Operating Systems	Windows®, 7, 8, 10, Server 2000, Server 2003, Server 2008, Server 2008 R2, Server 2012 Mac OS® version 10.10 and higher Citrix® Redhat® Enterprise Linux® IBM® AIX® 5 HP-UX® 11iv2 Oracle® Solaris 9, 10 Fedora Core 12-15 SUSE®
Network Protocols	TCP/IP: HTTP/HTTPS, IPP, LPR/LDP, Raw Socket Printing/Port 9100, IPv4/IPv6, WSD SMB SMTP, Secure SMTP LDAP, Secure LDAP Bonjour® / AirPrint® FTP Most protocols not in use can be disabled
Administrative Protocols	DHCP, SNMP v2/3, WINS, DHCP Autonet, TLS, SNTP, MDNS
Font Capability	136 PostScript fonts 88 PCL fonts
Mobile Solutions and Mobile Device Apps	
Xerox® Mobile Express Driver®	Makes it easy for mobile users to find, use and manage Xerox® and non-Xerox® devices in every new location. Plug into a new network, and Mobile Express Driver automatically discovers available printers and provides status and capability information. Save a list of “favorite” printers for each location, store application print settings for use on any printer in any network, and greatly reduce mobile support calls to IT.
Xerox® Global Print Driver®	A truly universal print driver that lets IT administrators install, upgrade and manage Xerox® and non-Xerox® devices from a single driver. It provides a consistent, easy-to-use interface for end-users, reducing the number of support calls, and simplifying print services management.
Apple® AirPrint®	Print email, photos and important office documents directly from an Apple iPhone® or iPad® with no drivers to install and no cables to connect. With AirPrint, an iPhone or iPad automatically locates and connects to the AirPrint-enabled device over the office Wi-Fi network.
Google Cloud Print™	Google Cloud Print connects print devices to the web, enabling users to print the applications they use every day from smartphones, tablets, Chromebook™ notebook computers and any other web-connected device.

Xerox® Phaser® 6510 Color Printer

Xerox® Print Service Plug-in for Android™ (Free at Google Play™ Store)	The Xerox® Print Service Plug-in for Android KitKat (4.4 or greater) devices streamlines mobile printing without third-party apps or additional print drivers. You can easily print photos, Web pages and documents when your mobile device is connected to printers or multifunction printers using a wireless network. A robust print option set includes two-sided printing, stapling and secure code release. A free download is available from the Google Play™ store.
Xerox® Wireless Print Solutions Adapter (Optional)	The Xerox® Wireless Print Solutions Adapter seamlessly connects your Xerox® printer or MFP to modern mobile and desktop workflows, regardless of your office environment. For more information, visit **www.xerox.com/WPSA**
Xerox® Print Management and Mobility Suite, Xerox® Print Management and Mobility Service	Xerox® Print Management and Mobility Suite is a modular set of workflows designed to save customers time and money by providing effective control over their print fleet, while enabling worker productivity and mobility through a set of robust workflows. Xerox enables ultimate customer flexibility by offering these capabilities in both an on-premises server version and with a cloud based-version of this solution.
Security	
Security Features	Simultaneous HTTP and HTTPS support IPsec 802.1x Authentication S/MIME IP Filtering Secure Print SNMP v3 LDAP (SASL)
Device Management	
Xerox® CentreWare® Web	
	• A Web-based server application for network administrators that permits web browser-based device management from any workstation, whether running Windows or UNIX or any other operating system • Works with any SNMP-managed printer from any manufacturer • Provides help with device discovery and installations, health checks and troubleshooting, and device upgrades, as well as basic accounting and asset management
Xerox® Embedded Web Server - Integrated Device Web Page	
Device Status	• Tray status/contents • Consumables status • Billing/Usage • Quick Links
Job Submission	Print-ready files (PS, PCL®, PDF, XPS, JPEG)
Device Administration	Allows simple, remote installation setting of configuration options and management of the device.
Browsers	Microsoft® Internet Explorer 11 Microsoft Edge™ 38 Mozilla™ Firefox® 48 Apple® Safari® 9.1 Google Chrome™ 52
Remote Print Services	
Xerox® MeterAssistant® Service	Automates the process of collecting and submitting meter reads for tracking and billing of Xerox® device usage. Eliminates the need for time-consuming end-user involvement and ensures that meter reads are submitted to Xerox on time.
Xerox® SuppliesAssistant® Service	Automatically orders supplies for Xerox® output devices based on actual usage, eliminating the need to manually manage supplies inventory.
Maintenance Assistant	Offers a fast (and free) way to resolve potential issues and receive assistance and automate the troubleshooting/repair process. Diagnostic data is sent to Xerox, allowing for problems to be solved faster with increased uptime.

Xerox® Phaser® 6510 Color Printer

What's In The Box	
	• Phaser 6510 Color Printer • Standard Capacity Print cartridge: One of each (Cyan, Magenta, Yellow: 1,000 print capacity[5]; Black: 1,500 print capacity[5] • Software and Documentation CD (with User Manual, Quick Install Guide, Safety, Regulatory, Recycling and Disposal Guides, Print Drivers and Warranty Statement) • Installation Guide • Quick Use Guides • Power cord

Supplies and Accessories	Quantity	Part Number
Supplies		
Extra-High Capacity Print Cartridges	Cyan: 4,300 standard pages[5] Magenta: 4,300 standard pages[5] Yellow: 4,300 standard pages[5]	106R03690 106R03691 106R03692
High Capacity Print Cartridges	Black 5,500 standard pages[5] Cyan: 2,400 standard pages[5] Magenta: 2,400 standard pages[5] Yellow: 2,400 standard pages[5]	106R03480 106R03477 106R03478 106R03479
Standard Capacity Print Cartridges	Black: 2,500 standard pages[5] Cyan: 1,000 standard pages[5] Magenta: 1,000 standard pages[5] Yellow: 1,000 standard pages[5]	106R03476 106R03473 106R03474 106R03475
Drum Cartridges	Black: 48,000 pages[6] Cyan: 48,000 pages[6] Magenta: 48,000 pages[6] Yellow: 48,000 pages[6]	108R01420 108R01417 108R01418 108R01419
Waste Cartridge	30,000 pages[6]	108R01416
Accessories		
550-sheet Paper Tray		097S04765
Wireless Network Adapter		497K16750

[1] Maximum volume capacity expected in any one month. Not expected to be sustained on a regular basis.
[2] Expected regular monthly throughput.
[3] Paper capacities are based on 20 lb. / 75 gsm stock; capacities will vary with different weight stocks.
[4] Power states defined per ENERGY STAR® Program requirements for Imaging Equipment.
[5] Average standard pages. Declared Yield in accordance with ISO/IEC 19798. Yield will vary based on image, area coverage and print mode.
[6] Approximate pages. Declared Yield based on letter-/A4-size 20 lb. (75 gsm) pages. Yield will vary based on media type, size, weight, orientation, and usage patterns.

Return spent imaging supplies through the Xerox Green World Alliance collection/reuse/recycling program. For more information, visit www.xerox.com/about-xerox/recycling.

For more information, visit us at **www.xerox.com/office**

Configurations vary by geography.

©2018 Xerox Corporation. All rights reserved. Xerox®, Xerox and Design®, CentreWare®, Global Print Driver®, MeterAssistant®, Mobile Express Driver®, Phaser®, and SuppliesAssistant® are trademarks of Xerox Corporation in the United States and/or other countries. As an ENERGY STAR® partner, Xerox Corporation has determined that this product meets the ENERGY STAR guidelines for energy efficiency (DN and DNI configurations). ENERGY STAR and the ENERGY STAR mark are registered U.S. marks. The information in this brochure is subject to change without notice.
Updated 1/18 BR19948 65XSS-01UF

3915 BADGE PRINTER



Zebra ZXP Series 9 Retransfer Dual-Sided ID Card Printer Description

Quality, Dependability, Flexibility and Speed

Government, Education, Retail and Hospitality industries have an ever-increasing focus on security, a need for flexibility and a continual demand for efficiency.

Outstanding Print Quality + Fastest Print Speeds

Produce durable, long-lasting, tamper-resistant cards with the sharpest photo-like image quality that boasts rich, consistent colors and strikingly sharp resolution. Industry-leading throughput allows you to print more cards faster—even with dual-sided lamination and encoding.

Valuable Cost Savings + Reduced Waste

Ensure security and reduce the likelihood of forgeries with best-in-class retransfer and laminate technology — including holographic images.

Experience extremely low cost-per-card operation with Zebra's patented waste-free laminate technology featuring linerless media with a single core and no carrier. Reduce waste by 50% and save up to 30% in costs compared to the competition.

Smart Design + Flexible, Hassle-free Operation

Zebra's patented dual-sided, simultaneous retransfer printing design eliminates the need for the printer to mechanically flip cards during production. This engineering makes throughput even faster, and it reduces the risk of costly mechanical errors and card jams.

Featuring multiple connectivity options including standard USB and Ethernet, along with optional Wi-Fi®(US and EU only), the ZXP Series 9 gives you the added flexibility you need to relocate your printer anywhere within your network. And, the printer's new user-selectable print quality mode gives you more options and control.

Exclusive Color Predictive Technology

Zebra's exclusive Color Predictive Technology (CPT) delivers superior, photo-like image quality. Based on patented image-processing algorithms, Zebra's CPT constantly monitors printing and instantaneously

adapts printer settings to automatically produce the highest print quality—time after time, card after card.

Zebra ZXP Series 9 Retransfer Dual-Sided ID Card Printer Specifications

PRINTING

- Dye diffusion retransfer
- Full color or monochrome retransfer printing
- Dual-sided printing
- Max print speed dual-sided 180 cph (Print speed based on click to drop, average print coverage, with USB connectivity, card per hour)
- User-selectable print modes: standard and fine
- Photo-quality images
- Over-the-edge printing on standard CR80 media

STANDARD FEATURES

- USB and Ethernet connectivity
- Single-card feed capability
- 150 card capacity feeder (30 mil)
- 15 card capacity reject hopper (30 mil)
- 100 card capacity output hopper (30 mil)
- i Series™ intelligent media technology
- Auto-calibration of media
- 21-character, 6 line LCD operator display
- 304 dpi (12.0 dots/mm) print resolution
- 64 MB memory standard
- Lifetime warranty on printhead
- 2-year limited warranty on printer
- Microsoft ® Windows certified drivers
- Kensington physical lock capable

OPTIONS AND ACCESSORIES

- Lockable enclosure/card feeder
- Zebra OneCare service programs
- Card input hopper (150 cards 30 mil)

ENCODING OPTIONS & SPECIFICATIONS

- ISO 7816 Smart Card Contact Station for third-party external contact encoders
- Encoding over Ethernet

ZMOTIF SOFTWARE

- ZMotif SDK support and sample code
- Microsoft Windows Certified Printer Drivers with toolbox utility features: Windows 8, Windows 2012, Windows 10, Windows 2008, Windows 7
- CardStudio card design and issuance software
- Zebra Virtual PrintWare software support

Driver Features

- Graphical card orientation setting to visualize card printing setup and configuration
- Card source and card type selection
- Complete graphical control over area and element selection of black extraction parameters
- Auto sensing of ribbon type, laminator and smart card encoding options

Toolbox Utility Features

- Printer configuration tools and utilities for complete control over all printer functions and features
- Optional password protection settings and user role-based security settings prevent accidental or unauthorized driver or printer configuration changes
- Complete technology card management enables setup and testing of all printer and encoder features and functionality
- Printer test cards and diagnostics utilities ensure error-free printing and fast troubleshooting capabilities

ZMOTIF SDK

- Downloadable SDK for custom applications
- SDK enables third parties to quickly add advanced print and encoding features to the ZXP Series 9 printer
- Capabilities include direct access to PC/SC Smart Card encoder driver and job control over print job specifications
- Support for complete Uv printer and inhibit panel support

SUPPLIES

- Zebra i Series intelligent technology uses RFID tags to authenticate and automate color ribbons, transfer film and laminate
- Specially designed cleaning supplies simplify preventative maintenance

True Colours i Series Ribbon:

- YMCK 4 panel: 625 images/roll
- YMCKK 5 panel: 500 images/roll
- YMCUvK 5 panel: 500 images/roll
- YMCKI 5 panel: 500 images/roll
- YMCKKI 6 panel: 415 images/roll
- YMC 3 panel: 800 images/roll
- Monochome black: 2500 images/roll
- True Colours i Series Transfer Film:
- Clear: 1250 single-sided/625 dual-sided cards/roll

CARD SPECIFICATIONS

- Card thickness: 30 — 40 mil
- Card size: ISO 7810 format, Type ID-1, CR-80 size
- Card material: PVC and composite, ABS cards, PET, PET-G, and Teslin® composite
- Specialty cards: transparent (IR-blocked) or translucent card 30 mil (clear and colored)
- Technology cards: contact and contactless smart cards, UHF cards

COMMUNICATIONS INTERFACES

- USB 2.0
- USB supports plug-and-play printer identification
- 10/100 Ethernet

ELECTRICAL

- Auto-switching single-phase AC power
- 100V~240V AC and 50-60 Hz

PHYSICAL Printer

- Height (w/ card hoppers): 13.2”/334 mm
- Width (w/ card hoppers): 18.75”/476 mm
- Depth: 20.4”/519 mm
- Weight (printer only): 27.5 lbs./12.5 kg

ENVIRONMENTAL

- Operating Temperature: 59º F/15º C to 95º F/35º C
- Storage Temperature: 23º F/-5º C to 131º F/55º C
- Operating Humidity: 20% to 80% inclusive, non-condensing
- Storage Humidity: 10% to 90% inclusive, non-condensing
- Shipping Temperature: -40º F/-40º C to 140º F/60º C
- Shipping Humidity: 10% to 90% inclusive, non-condensing
- Media should not be above 140º F/60º C for longer than 200 hours, and above 90% relative humidity at 104º F/40º C for longer than 100 hours

  NOTE: For optimum print quality and printer performance, use of Genuine Zebra supplies is recommended.

Xerox® Phaser® 6510 Color Printer



System Specifications	Phaser® 6510
One-sided Speed 8.5 x 11 in. A4 / 210 x 297 mm 8.5 x 14 in. / 216 x 356 mm	 Up to 30 ppm color and black-and-white Up to 28 ppm color and black-and-white Up to 24 ppm Color and black-and-white
Two-sided Speed 8.5 x 11 in. A4 / 210 x 297 mm 8.5 x 14 in. / 216 x 356 mm	 Up to 19 ppm color and black-and-white Up to 18 ppm color and black-and-white Up to 17 ppm color and black-and-white
Monthly Duty Cycle[1]	Up to 50,000 pages / month
Recommended Average Monthly Print Volume[2]	Up to 3,000 pages
Processor	733 MHz
Memory	1 GB
Connectivity	10/100/1000Base-T Ethernet High-Speed USB 3.0 Wi-Fi 802.11n Wi-Fi Direct®
Device Specifications	
Electrical Requirements	
North America	Voltage: 120 VAC +/- 10 % Frequency: 60 Hz +/- 3 Hz, 12A
Europe	Voltage: 220-240 VAC +/- 10 % Frequency: 50 Hz +/- 3 Hz, 6A
Power Consumption	
Operation[4]	120V: Maximum 380 watts 220V: Maximum 350 watts
Standby Mode[4]	120V: Maximum 41 watts 220V: Maximum 44 watts
Power Off Mode[4]	120V: Maximum 0.2 watts 220V: Maximum 0.3 watts
Sleep Mode[4]	120V: Maximum 0.9 watts 220V: Maximum 1.0 watts
Warm-up (from Sleep Mode)	As fast as 26 seconds
Operating Environment	
Required Temperature Range (Storage)	-4˚F to 104˚F / -20˚C to 40˚C
Required Temperature Range (Operating)	41˚F to 90˚F / 5˚C to 32˚C

Xerox® Phaser® 6510 Color Printer

Required Relative Humidity	15 % to 85 %			
Sound Power Levels	Operating: 6.76 B or less Standby: 4.00 B or less			
Sound Pressure Levels	Operating: 51.9 dB(A) or less Standby: 24.9 dB(A) or less			
Dimensions and Weights (unpackaged)	**Width**	**Depth**	**Height**	**Weight**
Phaser® 6510	16.5 in. / 420 mm	19 in. / 483 mm	13.7 in. / 347 mm	52.5 lb. / 23.8 kg
550-sheet Paper Tray	16.5 in. / 420 mm	18.3 in. / 465 mm	5.9 in. / 150 mm	14.8 lb. / 6.7 kg
Dimensions and Weights (packaged)	**Width**	**Depth**	**Height**	**Weight**
Phaser® 6510	14.3 in. / 634 mm	22.8 in. / 580 mm	19.9 in. / 505 mm	64.4 lb. / 29.2 kg
550-sheet Paper Tray	21.1 in. / 535 mm	23 in. / 584 mm	9.8 in. / 248 mm	18.7 lb. / 8.5 kg
Certifications				
To view the latest list of certifications, go to **www.xerox.com/OfficeCertifications**.				
Print				
First-Print-Out Time	As fast as 12 seconds color and black-and-white			
Print Resolution	Up to 1200 x 2400 dpi			
Page Description Languages	Adobe® PostScript® 3™ PCL® 5e, 6 PDF TIFF			
Maximum Print Area	4 mm edge of paper			
Print Features	Banner Sheets Booklet Print Cover / Separators Draft Mode Fit to Page N-up Overlays PANTONE® Color Calibrated Solid-color Simulations Personal Print Proof Print RAM Collation Run Black Saved Print Secure Print Watermarks			
Print from USB	Supports direct printing from computer via Type B USB port Supported file formats: PDF, JPEG, TIFF, XPS			
Operating Systems	Windows® 7, 8, 10, Server 2000, Server 2003, Server 2008, Server 2008 R2, Server 2012 Mac OS® version 10.10 and higher Citrix® Redhat® Enterprise Linux® IBM® AIX® 5 HP-UX® 11iv2 Oracle® Solaris 9, 10 Fedora Core 12-15 SUSE®			
Font Capability	136 PostScript fonts 88 PCL fonts			

Xerox® Phaser® 6510 Color Printer

Xerox® Mobile Express Driver®	Makes it easy for mobile users to find, use and manage Xerox® and non-Xerox® devices in every new location. Plug into a new network, and Mobile Express Driver® automatically discovers available printers and provides status and capability information. Save a list of "favorite" printers for each location, store application print settings for use on any printer in any network, and greatly reduce mobile support calls to IT.
Xerox® Global Print Driver®	A truly universal print driver that lets IT administrators install, upgrade and manage Xerox® and non-Xerox® devices from a single driver. It provides a consistent, easy-to-use interface for end-users, reducing the number of support calls, and simplifying print services management.
Mobile Solutions and Mobile Device Apps	
Apple® AirPrint®	Print email, photos and important office documents directly from an Apple iPhone® or iPad® with no drivers to install and no cables to connect. With AirPrint, an iPhone or iPad automatically locates and connects to the AirPrint-enabled device over the office Wi-Fi network.
Google Cloud Print™	Google Cloud Print connects print devices to the web, enabling users to print the applications they use every day from smartphones, tablets, Chromebook™ notebook computers and any other web-connected device.
Mopria® Certified	Mopria® certification ensures you can print wirelessly from your Mopria® supported (Android) smart phone, tablet and other mobile devices linstantly and easily.
Xerox® Print Service Plug-in for Android™ (Free at Google Play™ Store)	The Xerox® Print Service Plug-in for Android KitKat (4.4 or greater) devices streamlines mobile printing without third-party apps or additional print drivers. You can easily print photos, web pages and documents when your mobile device is connected to printers or multifunction printers using a wireless network. A robust print option set includes two-sided printing, stapling and secure code release. A free download is available from the Google Play™ store.
Xerox® Workplace Suite and Xerox® Workplace Cloud	Xerox® Workplace Solutions boost productivity and reduce costs with a modular print management and mobility solution. Control and manage your printer fleet while enabling mobile productivity with simplified workflows, convenience and security — for any brand printer, anywhere. Xerox® Workplace Solutions offer flexible license options to suit any size business with the ability to scale as you grow. • Xerox® Workplace Suite: On-site, your server • Xerox® Workplace Cloud: Simple setup, cloud administration To learn more about the Xerox® Workplace Suite and Xerox® Workplace Cloud, visit www.xerox.com/Mobility.
Security	
Security Features	Simultaneous HTTP and HTTPS support IPsec 802.1x Authentication S/MIME IP Filtering Secure Print SNMP v3 LDAP (SASL)
Paper Handling	
Bypass Tray	
Capacity[3]	50 sheets
Sizes	Custom Sizes: 3 x 5 in. to 8.5 x 14 in. / 76 x 127 mm to 216 x 356 mm
Weights	16 lb. bond to 58 lb. cover / 60 to 220 gsm
Types	Bond Plain Cardstock Custom Envelopes Glossy Cardstock Hole Punched Labels Letterhead Lightweight Cardstock Lightweight Glossy Cardstock Preprinted Recycled

Xerox® Phaser® 6510 Color Printer

Tray 1	
Capacity[3]	250 sheets
Sizes	Custom Sizes 3 x 5.8 in. to 8.5 x 14 in. / 76 x 147 mm to 216 x 356 mm
Weights	16 lb. bond to 65 lb. cover / 60 to 176 gsm
Types	Bond Plain Cardstock Custom Envelopes Glossy Cardstock Hole Punched Labels Letterhead Lightweight Cardstock Lightweight Glossy Cardstock Preprinted Recycled
Optional Tray 2	
Capacity[3]	550 sheets
Sizes	Custom Sizes: 3 x 7.5 in. to 8.5 x 14 in. / 76 x 191 mm to 216 x 356 mm
Weights	16 lb. bond to 65 lb. cover / 60 to 176 gsm
Types	Bond Plain Cardstock Custom Glossy Cardstock Hole Punched Letterhead Lightweight Cardstock Lightweight Glossy Cardstock Preprinted Recycled
Total Capacity	
Device Standard Capacity[3]	300 sheets
Device Total Capacity[3]	850 sheets
Paper Output	
Output Capacity[3]	150 sheets
Automatic 2-Sided	Standard

Xerox® Phaser® 6510 Color Printer

Device Management	
Network Protocols	TCP/IP: HTTP/HTTPS, IPP, LPR/LDP, Raw Socket Printing/Port 9100, IPv4/IPv6, WSD SMB SMTP, Secure SMTP LDAP, Secure LDAP Bonjour® / AirPrint® FTP Most protocols not in use can be disabled
Administrative Protocols	DHCP, SNMP v2/3, WINS, DHCP Autonet, TLS, SNTP, MDNS
Xerox® CentreWare® Web	
	• A web-based server application for network administrators that permits web browser-based device management from any workstation, whether running Windows or UNIX or any other operating system • Works with any SNMP-managed printer from any manufacturer • Provides help with device discovery and installations, health checks and troubleshooting, and device upgrades, as well as basic accounting and asset management
Xerox® Embedded Web Server - Integrated Device Web Page	
Device Status	• Tray Status / Contents • Consumables Status • Billing / Usage • Quick Links
Job Submission	Print-ready files (PS, PCL®, PDF, XPS, JPEG)
Device Administration	Allows simple, remote installation setting of configuration options and management of the device.
Browsers	Microsoft® Internet Explorer Microsoft Edge™ Mozilla™ Firefox® Apple® Safari® Google Chrome™
Remote Print Services	
Xerox® Automated Meter Readings (AMR)	Automates the process of collecting and submitting meter reads for tracking and billing of Xerox® device usage. Eliminates the need for time-consuming end-user involvement and ensures that meter reads are submitted to Xerox on time.
Xerox® Automatic Supplies Replenishment (ASR)	Automatically orders supplies for Xerox® output devices based on actual usage, eliminating the need to manually manage supplies inventory
Troubleshooting and Diagnostic Support	Offers a fast (and free) way to resolve potential issues and receive assistance and automate the troubleshooting/repair process. Diagnostic data is sent to Xerox, allowing for problems to be solved faster with increased uptime.
What's In The Box	
	• Phaser® 6510 Color Printer • Standard Capacity Print Cartridge: One of each (Cyan, Magenta, Yellow): 1,000 print capacity[5]; Black: 1,500 print capacity[5] • Software and Documentation CD (with User Manual, Quick Install Guide, Safety, Regulatory, Recycling and Disposal Guides, Print Drivers and Warranty Statement) • Installation Guide • Quick Use Guides • Power Cord

Xerox® Phaser® 6510 Color Printer

Supplies and Accessories	Quantity	Part Number
Supplies		
Extra-High Capacity Print Cartridges	Cyan: 4,300 standard pages[5] Magenta: 4,300 standard pages[5] Yellow: 4,300 standard pages[5]	106R03690 106R03691 106R03692
High Capacity Print Cartridges	Black 5,500 standard pages[5] Cyan: 2,400 standard pages[5] Magenta: 2,400 standard pages[5] Yellow: 2,400 standard pages[5]	106R03480 106R03477 106R03478 106R03479
Standard Capacity Print Cartridges	Black: 2,500 standard pages[5] Cyan: 1,000 standard pages[5] Magenta: 1,000 standard pages[5] Yellow: 1,000 standard pages[5]	106R03476 106R03473 106R03474 106R03475
Drum Cartridges	Black: 48,000 pages[6] Cyan: 48,000 pages[6] Magenta: 48,000 pages[6] Yellow: 48,000 pages[6]	108R01420 108R01417 108R01418 108R01419
Waste Cartridge	30,000 pages[6]	108R01416
Accessories		
550-sheet Paper Tray		097S04765
Wireless Network Adapter		497K16750
Stand		097S04994

[1] Maximum volume capacity expected in any one month. Not expected to be sustained on a regular basis.
[2] Expected regular monthly throughput.
[3] Paper capacities are based on 20 lb. / 75 gsm stock; capacities will vary with different weight stocks.
[4] Power states defined per ENERGY STAR® Program requirements for Imaging Equipment.
[5] Average standard pages. Declared Yield in accordance with ISO/IEC 19798. Yield will vary based on image, area coverage and print mode.
[6] Approximate pages. Declared Yield based on letter-/A4-size 20 lb. (75 gsm) pages. Yield will vary based on media type, size, weight, orientation, and usage patterns.

Return spent imaging supplies through the Xerox Green World Alliance collection/reuse/recycling program.
For more information, visit www.xerox.com/About-Xerox/Recycling.

For more information, visit us at **www.xerox.com/Office**.

Configurations vary by geography.

Xerox® Phaser® 6510 Color Printer

©2019 Xerox Corporation. All rights reserved. Xerox®, Xerox and Design®, CentreWare®, Global Print Driver®, Mobile Express Driver® and Phaser® are trademarks of Xerox Corporation in the United States and/or other countries. As an ENERGY STAR® partner, Xerox Corporation has determined that this product meets the ENERGY STAR guidelines for energy efficiency (DN and DNI configurations). ENERGY STAR and the ENERGY STAR mark are registered U.S. marks. The information in this brochure is subject to change without notice.
Updated 1/19 BR19948 65XSS-01UG

3972

TRADES CART FOR FACILITIES MAINTENANCE



TRADES CART WITH LOCKING CABINET, INCLUDES 2 PARTS BOXES AND 4 PARTS BINS, BLACK

SKU: FG618088BLA

The Rubbermaid Commercial Rolling Tool Chest moves productivity right to the work site with a total tool storage and mobile workbench system.

- Won't rust, dent, chip, or peel
- Rounded corners protect walls and furniture
- Easy-access bottom shelf
- 5" non-marking casters
- Four 5" non-marking casters maneuver the cart easily over hard surfaces and through doorways

RUBBERMAID FG618088BLA SPECS	
Length	38 Inches
Width	19 3/16 Inches
Height	33 3/8 Inches

SOURCE: https://www.webstaurantstore.com/rubbermaid-fg618088bla-38-x-19-3-16-black-trades-cart-with-locking-cabinet/690FG61808BK.html?utm_source=bing&utm_medium=cpc&utm_campaign=Shopping%20LP&utm_term=110400560686&utm_content=Equipment

3974

	TRADES CART		CONTRACTORS CART		MOBILE WORK CENTER		TRADEMASTER®		TRADEMASTER®		TRADEMASTER®		LADDER CART	
														
	SMALL	LARGE	SMALL	LARGE	SMALL	LARGE	SMALL	LARGE	SMALL	LARGE	SMALL	LARGE	SMALL	LARGE
CART SIZE	38" (L) X 19.25" (W) X 33.4" (H)	–	52.5" (L) X 38.6" (W) X 37.9" (H)	–	32.63" (L) X 19.9" (W) X 33.5" (H)	–	40.6" (L) X 18.4" (W) X 33.4" (H)	–	41.6" (L) X 18.25" (W) X 38.4" (H)	49" (L) X 26.25" (W) X 38.25" (H)	49" (L) X 26.25" (W) X 38.0" (H)	58.6" (L) X 26.4" (W) X 33.25" (H)	–	31.5" (L) X 27" (W) X 42" (H)
AVAILABLE COLORS	BLACK/RED		BLACK/RED		BLACK/RED		BLACK/RED		BLACK/RED		BLACK/RED		BLACK/RED	
HANDLE TYPE	FLAT-HANDLE		VARIABLE GRIP-HEIGHT HANDLE		FLAT-HANDLE		VARIABLE GRIP-HEIGHT HANDLE		VARIABLE GRIP-HEIGHT HANDLE		VARIABLE GRIP-HEIGHT HANDLE		FLAT-HANDLE	
SHELF TYPE	FLAT-SHELF		FLAT-SHELF		FLAT-SHELF		POCKET-SHELF WITH OPEN-FRONT		POCKET-SHELF WITH OPEN-FRONT		POCKET-SHELF WITH OPEN-FRONT		FLAT-SHELF	
CASTER SIZE	5"		5"		4"		5"		5"		5"		5"	
MAX. WEIGHT-CAPACITY	330 LBS.		500 LBS.		250 LBS.		500 LBS.		500-750 LBS.		750 LBS.		500 LBS.	
MATERIAL	STRUCTURAL FOAM		STRUCTURAL FOAM		STRUCTURAL FOAM		STRUCTURAL FOAM		STRUCTURAL FOAM		STRUCTURAL FOAM		STRUCTURAL FOAM POWDER-COATED STEEL	
STORAGE CONFIGURATION	2-DRAWERS CABINET OPTIONAL		SINGLE FULL EXTENSION DRAWERS HINGED-TOP STORAGE COMPARTMENT		5-DRAWERS		4-DRAWERS		2-CABINET DOORS		4-DRAWERS + CABINET DOOR		CABINET DOORS FASTENER CADDY (TOP SHELF)	
ASSEMBLY	ASSEMBLY REQUIRED		SHIPS 90% ASSEMBLED		ASSEMBLY REQUIRED		SHIPS 90% ASSEMBLED		SHIPS 90% ASSEMBLED		SHIPS 90% ASSEMBLED		ASSEMBLY REQUIRED	
MOLDED-IN PERIMETER					•		•		•		•			
EASY-REACH TOOL/ ACCESSORY STORAGE COMPARTMENT			•		•		•		•		•		•	
CUP HOLDER			•				•		•		•			
3-OUTLET POWER STRIP							•		•		•			
CENTRAL LOCKING SYSTEM	•		•		•		•		•		•		•	
ACCESSORIES														
REFUSE BIN (8 GALLON)					•		•		•					
UTILITY BIN (4 GAL.)					•		•		•					
CORD/STEP LADDER HOOKS			•				•		•		•			

		STANDARD CASTERS	CASTER OPTIONS
CASTER TREAD MATERIAL		TPR (THERMOPLASTIC RUBBER)	PNEUMATIC
CASTER SIZE		5"	8"
CASTER TYPE (QTY.)		2 SWIVEL; 2 FIXED	–
FLOOR SURFACES	EXCELLENT	ASPHALT, BRICK, CARPET, CONCRETE, LINOLEUM/TILE, TERRAZZO, AND WOOD	ASPHALT, BRICK, CARPET, CONCRETE, LINOLEUM/TILE, TERRAZZO, STEEL (RIBBED AND SMOOTH), AND WOOD
	GOOD	STEEL (RIBBED AND SMOOTH)	–
	FAIR	–	–
OPERATING CONDITIONS	EXCELLENT	METAL SCRAPS (SMALL OR LARGE)	–
	GOOD	WATER, STEAM, OR ANIMAL FATS	MILD OR HARSH CHEMICALS, METAL SCRAPS (SMALL OR LARGE), WATER, STEAM, OR ANIMAL FATS
	FAIR	MILD OR HARSH CHEMICALS, OIL & GREASE	OIL & GREASE
REPLACEMENT ITEM #		SWIVEL: FG4532L20000 RIGID: FG4532L10000	–
ADDITIONAL INFORMATION		TPR CASTERS ABSORB SHOCK AND PROVIDE FLOOR SURFACE PROTECTION AND QUIET OPERATION. CHEMICAL AND WATER RESISTANT.	PNEUMATIC CASTERS PROVIDE A CUSHIONED AND QUIET RIDE FOR FRAGILE LOADS. ALSO IDEAL FOR ROUGH, UNEVEN SURFACES BOTH IN INDOOR AND OUTDOOR USE.

MOBILE WORKSTATIONS
SELECTION GUIDE

RCP-386
#141734
©2015 Rubbermaid Commercial Products LLC
8900 Northpointe Executive Drive, Huntersville, NC 28078

To see our complete range of material handling solutions visit our online catalog at **rubbermaidcommercial.com**

Rubbermaid® Commercial Products

USER GUIDE

Mobility MiX Cart

HKPX2VC/A Mobility MiX Cart 30

HKPY2VC/A Mobility MiX Cart 45

COST SOURCE:
https://www.amazon.com/Bretford-Mobility-Notebooks-Platinum-HKPY2BG1/dp/B06WVW9ZFB



TECHNICAL SPECIFICATIONS

CAPACITY per slot width		1″	1.25″	1.5″	
HKPX2VC/A	2 modules	30	24	20	devices
HKPY2VC/A	3 modules	45	36	30	devices

COMPATIBILITY Optimized for use with most Apple MagSafe (45W, 60W, 85W), USB (10W, 12W), and USB-C (29W, 61W, 87W) power adapters, supporting all sizes and models of MacBook and iPad.

OUTSIDE DIMENSIONS 33.50″W x 26.00″D x 44.5″H

SLOT DIMENSIONS 1″ or 1.25″ or 1.5″ W x 10″H or 10″H x 17″D

WEIGHT WITHOUT DEVICES 176 lb (30 cart)
190 lb (45 cart)

POWER MANAGER Digital

POWER REQUIREMENTS 100 -125V AC, 12A, 50/60Hz; 220-240V AC, 8A, 50/60Hz; optional USB output; 5V DC, 2.4A

SHIPPING Ships fully assembled, ready to load devices

WARRANTY 12 years cart, 3 years electrical. For full warranty terms and conditions, please visit: bretford.com/warranty

MADE IN USA with globally sourced components

What's in the Box?

- One (1) Mobility MiX Cart
  - One (1) Removable rear access panel
  - Two (2) thumb screws, pre-installed
- Mobility MiX Modules
  - Two (2) MiX Modules for HKPX2
  - Three (3) MiX Modules for HKPY2
    - Each MiX Module contains two (2) number bars
- Rubber mats
    - One (1) on top of the cart
    - Three (3), one on each shelf
- Hardware pack (red plastic bag)
    - Two (2) Torx T-25 security screws
    - Two (2) Washers
    - One (1) Torx T-25 bit
    - One (1) Programmable Combination Padlock
- One (1) Power Cord

General Use



CORD PASS-THROUGH

Grommet allows for laptop or other accessory to be powered on top of the cart, while their power cords are plugged inside the cart.

DURABLE PLASTIC TOP

Provides a soft, skid-resistant platform for objects placed on top of the cart (max. weight restriction of 25 lb)

COURTESY POWER OUTLET

Directly behind the left front door is a cutout for the following:

- Power whip which provides a single outlet for powering a device on the top of the cart, accessible through the Cord Pass-Through.
- Circuit breaker rated for 2 amps that is tied to courtesy power.
- A USB port which allows for syncing capability, if cart is used with a PowerSync MiX Module (sold separately)



ILLUMINATED POWER SWITCH

Located on the left side of the cabinet, in the Power Cord Shroud

POWER CORD SHROUD

Located on the left side of the cabinet, provides a cord winder for the power cord, and an IEC outlet for plugging in the 12-foot power cord

DIRECTIONAL LOCK CASTERS

When engaged, keep the cart rolling in the right direction. When unengaged, allow the cart to be easily maneuvered into small spaces. Marked with a Green Locking Tab

DOOR LOCK SHROUD

Protects the padlock and the locking handle from damage during transport.

REAR SECURITY PANEL

Provides access for removal of MiX Modules, allowing for easy wiring and setup to take place outside the cart. Ships with both thumb screws and security screws, enabling a choice between convenient, or restricted access to the power adapters in the back of the cart.

SETTING THE COMBINATION LOCK

Your new MiX Cart comes equipped with a resettable combination padlock. The lock is factory set to 0-0-0-0. Use the combination reset tool to set your combination, following the included instructions. Remember to depress the shackle before disengaging it from the lock.



POWER MANAGEMENT

Mobility MiX Carts offer advanced power management features to minimize device charging time, while limiting the maximum power draw to prevent electrical overload.

Upon startup, the cart will cycle power between zones to determine the initial power demand. During this period (and any subsequent period of time where the power demand exceeds the maximum threshold) device charging will be intermittent. This allows the cart to ignore zones that are empty and focus power on the zones with the largest demand.

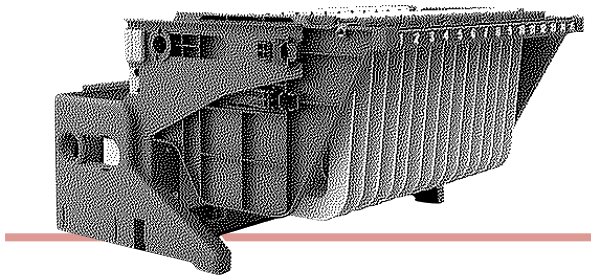

MiX MODULE SYSTEM™



The MiX Module disconnects from the MiX Cart and can be removed through the back of the cart, then placed on a work surface for simple, time-saving cable management & adjustable slot width - all outside the cart!

Removing MiX Modules from MiX Cart

1. IMPORTANT: Before you begin, be sure to remove any devices from the front of the cart and set them aside in a safe location.
2. From the front of the cart, reach under the dividers and slide the Locking Tabs (see fig 1.1) from both sides away from the cart's interior side wall. This releases the MiX Module from the cart.
3. At the back of the cart, remove the thumb screws (or if the security screws have been installed, use the security bit provided). Lift off the rear panel of the cart to expose the back of the MiX Modules.
4. Unplug the MiX Module power cord and Cat 6 Ethernet cable from the cart. The MiX Module is now ready to be lifted out of the cart.
5. Using the built-in handles, lift the MiX Module out of the cart and set it on a work surface. You are now ready to start customizing the slots for your specific devices and cable management.

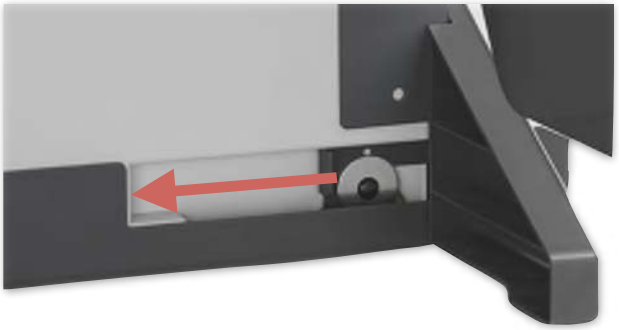

fig 1.1 Front View of the MiX Module
Step 2: Slide Locking Tabs toward center of cart

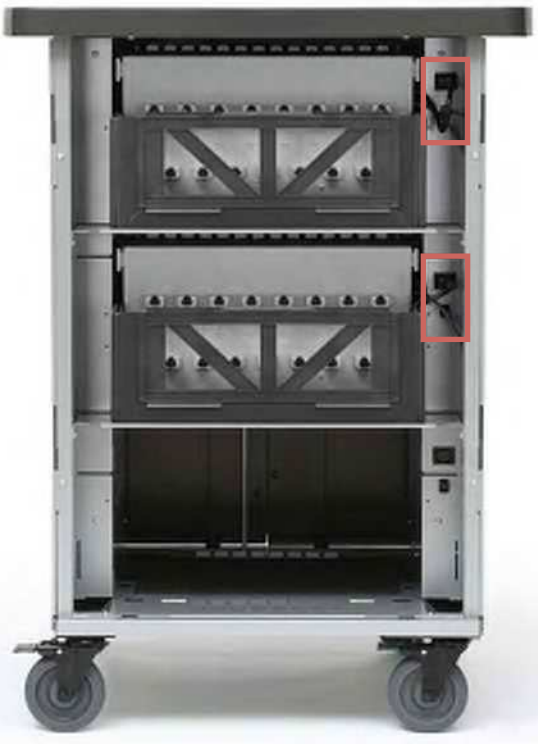

fig 1.2 Rear View of the Mobility MiX Cart
Step 4: Unplug MiX Module power & Cat Ethernet 6 cables



fig 1.3 Rear View of the MiX Module
Step 5: Lift the MIX Module out using the built-in handles



Security Screws

For convenience during setup, your new MiX Cart ships with thumb screws installed in the rear panel.

Replacing the thumb screws with the Torx screws included in the hardware pack is recommended for the most secure fit. NOTE: you must use the two washers included with the security screws.

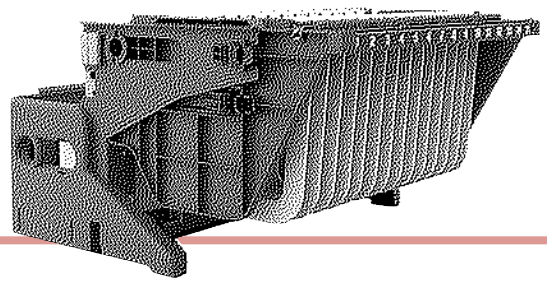

Adjust the Slot Width on the MiX Module

1. Set the MiX Module on a comfortable work surface where you will make all of the adjustments for storing and charging your devices.
2. It is suggested that your collection of devices be close at hand, with each adapter/cord set with its own device.
3. Your MiX Cart ships with the slot width of the MiX Modules set at 1″ intervals. Measure the ″height″ of your device as it sits closed on the work surface. This is the way the device will stand in the slot, and this dimension establishes the ″slot width″. If your device height is less than 1″, then leave the 1″ slots alone and move on to cable management.
4. If your device is taller than 1″ and less than 1 1/4″, then you will need to adjust the dividers to be 1 1/4″ wide, or 1.25″ wide. You will need to remove all of the dividers and reinstall them at the 1.25″ width. The MiX Module makes this exercise very simple.
5. First, release each of the dividers by pinching the white tabs on top of the Mix Module …. pinch between finger and thumb until the divider pops out. Remove the dividers to a safe place out of your way.
6. Next, with the MiX Module facing forward directly at you. locate the locking buttons on both sides of the MiX Module - little square buttons that when depressed in, allow the whole top assembly of the MX Module to side forward toward you on the rails.
7. Top assembly is now free to swivel up, revealing the mounting pattern for the dividers in an easier position for reattaching the dividers at the appropriate position.
8. Reinsert the dividers using the white knobs as the guide into the row of holes which matches your desired slot width (as illustrated below). NOTE: When reinserting the dividers for either 1.25″ or 1.5″ wide slots, rotate the dividers 180° so that they will fit into the pattern.
9. This process is identical for both 1.25″ and 1.5″ wide.
10. When complete, swivel the top assembly back down and slide back on the rails until the locking buttons click on both sides

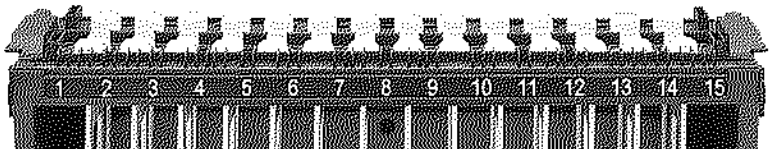

11. **Change the Slot Number Bar** to match the number of slots you now are using - either 15, 12 or 10. NOTE: The numbers will advance from the top module to the middle module to the lower module:
    1-15 16-30 31-45 1 bump on the rails' end
    1-12 13-24 25-36 2 bumps on the rails' end
    1-10 11-20 21-30 3 bumps on the rails' end

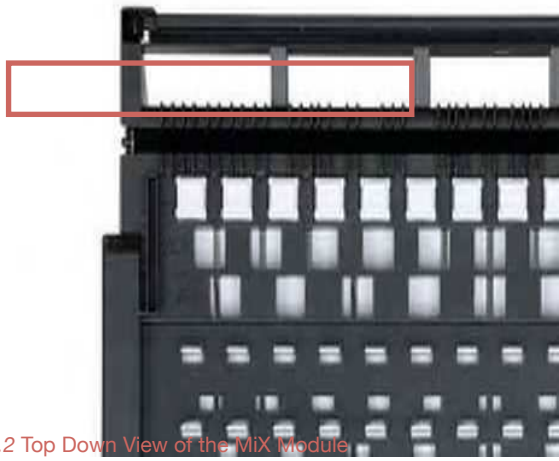

fig 2.2 Top Down View of the MiX Module

Step 5. Pinch the white tabs to release the dividers

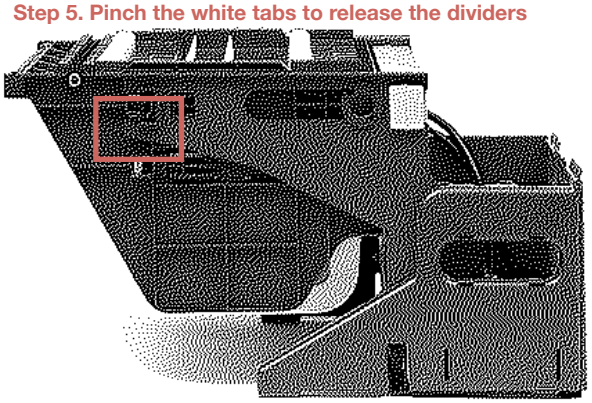

fig 2.2 Side View of the MiX Module

Step 6. Depress button on both sides of MiX Module & slide top assembly forward on the rails

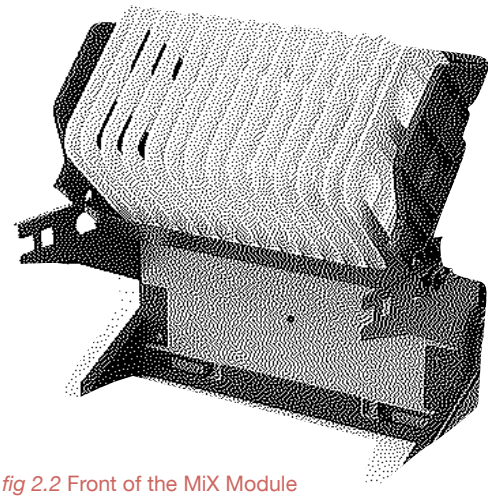

fig 2.2 Front of the MiX Module

Step 7. Swivel the top assembly up & over, revealing the pattern for attaching the dividers



Height Adjust the MiX Module

1. Set the MiX Module on a comfortable work surface where you will make all of the adjustments for storing and charging your devices.
2. It is suggested that your collection of devices be close at hand, with each adapter/cord set with its own device.
3. Your MiX Cart ships with the the MiX Modules set at 10″ height. Measure the ″depth″ of your device as it will sit in the slot of the MiX Module.. This is the way the device will stand in the slot, and this dimension establishes the ″slot height″. If your device height is less than 10″, then leave the height alone and move on to cable management.
4. If your device is deeper than 10″, then you will need to adjust the Height of the MiX Module to its 12″ high setting.
5. Start by removing two dividers from each side of the MiX Module
6. Then, with the MiX Module facing forward directly at you. locate the locking buttons on both sides of the MiX Module - little square buttons that when depressed in, allow the whole top assembly of the MiX Module to side forward toward you on the rails.
7. Top assembly is now free to swivel up.
8. Using the illustrations below, swivel the top assembly up until it is perpendicular to the frame. Find the Height Adjust Caps on both sides of the Module.
9. Hold the top assembly so that both the Height Adjust Cap and the 2nd adjustment hole are both visible through the Height Adjust Slot.
10. Keeping the top assembly steady with one hand, remove the Height Adjust Cap with the other hand and reinsert into the 2nd adjustment hole. Repeat on the opposite side of the top assembly.

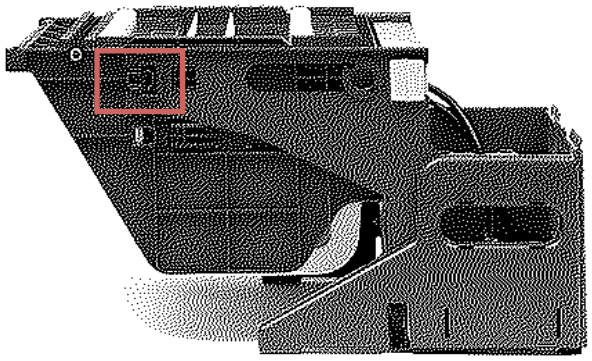

fig 3.1 Side View of the MiX Module

Step 6. Depress button on <u>both</u> sides of MiX Module & slide top assembly forward on the rails

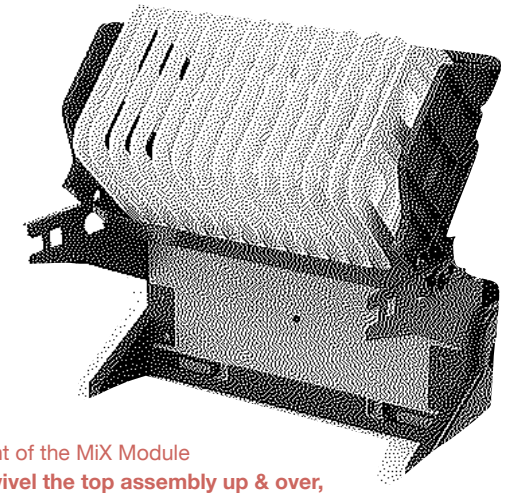

fig 3.2 Front of the MiX Module

Step 7. Swivel the top assembly up & over, revealing the pattern for attaching the dividers

11. Swivel the top assembly back down onto the rails and push back until the top assembly locks into place.
12. Congratulations! The available height for devices is now 12″.
13. The last thing to do is to remove the Safety Tabs that are in front of the Square Botton Locks. These are still at the 10″H setting. Then replace them in front of the Square Button Locks at the 12″H setting. These Safety Tabs assure that the top assembly stays in place on the rails

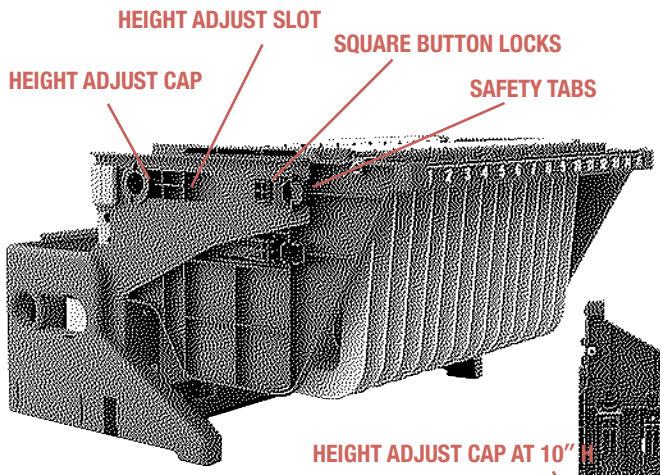

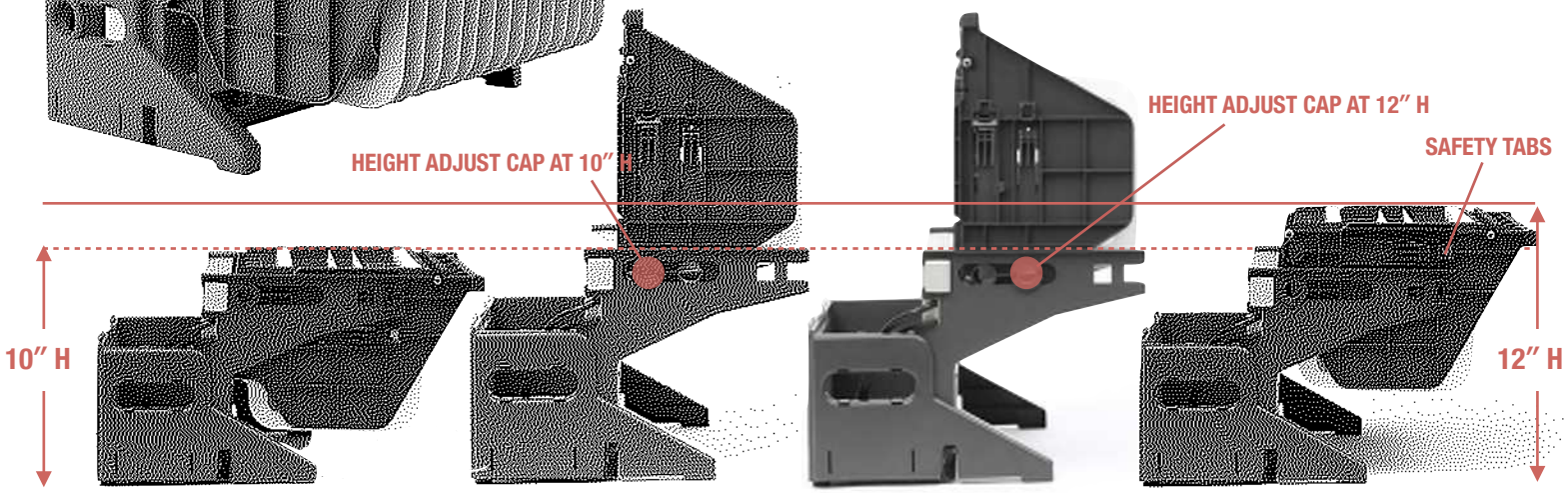

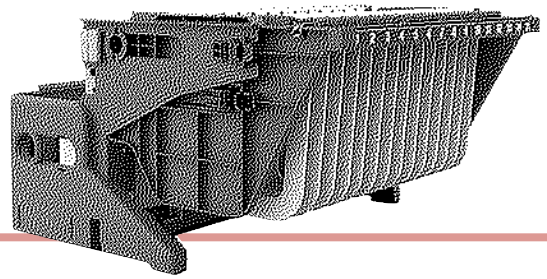

Cable Management on the MiX Module

1. Set the MiX Module on a comfortable work surface where you will make all of the adjustments for storing and charging your devices.
2. It is suggested that your collection of devices be close at hand, with each power adapter with its own device.
3. Start by removing the two-prong “duckhead” portion of the Apple Power Adapter. The bottom of the cord bin provides dedicated storage for the removed “duckhead” (see *fig 4.1*).
4. Take the cable from your first power adapter and lay it loosely across the top of the MiX Module. The cable will be running from back to front, hanging down in the slot at the front of the MiX Module.
5. For ease of wiring, beginning with the outlets closest to the bottom of the bin (3, 6, 9, 12, 15) is recommended.
6. Ensure that the cables are routed in between the white tabs on the top of the dividers. This ensures the cables are aligned perfectly with the device, even if the slot size is reconfigured.
7. Measure how far down from the top of the MiX Module the cord needs to drop down in front of the slot to plug into the device. This will be the standard cable dimension length for each adapter.
8. In the rear of the MiX Module, wrap the adapter and excess power cord using the “wings” on the power adapter (MagSafe only), or using cable ties.
9. Plug in the adapter into the MiX Module outlet that corresponds to the slot you are populating on the front of the MiX module. #3 outlet to #3 slot, #6 outlet to #6 slot, and so on. The length of each adapter’s power cord to its designated outlet will vary from wrapped adapter to wrapped adapter, as you move up to the 2nd row of outlets.
10. On the top of the module, there are two elastic strips (see *fig 4.1*) - which will help control the cables as they travel across the top assembly. Once you have plugged in the power adapter, and you have left the proper amount of cable to plug into the device, run that part of the cable under the elastic, to hold it in position.
11. Continue to fill the cable bin, plugging in the adapter cable sets and checking the length of cables at the from of the MiX Module to be sure you have enough length to plug into the computer.
12. When complete, you are ready to replace the MiX Module back into the MiX Cart.
13. If you changed the height of the MiX Modules to 12″, you will now need to adjust the steel shelf to the lower position (see next page).

NOTE: All MiX Cart models can support a maximum of 3 MiX Modules configured at the 10″ height, or 2 MiX Modules configured at 12″ height.



fig 4.1 Top down view of the Mobility MiX Module
Cable routing channels on top of the MiX Module and the dividers ensure perfect alignment.



fig 4.1 Rear view of the Mobility MiX Module (unwired)
Remove the power adapter “duckhead” before connecting to the MiX Module



fig 4.1 Rear view of the Mobility MiX Module (wired)
Excess cable can be wrapped around the power adapter “wings” (MagSafe only), or cable-tied



Both Rear View & Front View of the Mobility MiX Cart with shelves set to 10″ to accommodate 3 MiX Modules



Changing Shelf Height on the Mobility MiX Cart

All MiX Carts ships with a 10″ shelf height to match the default MiX Module height. If your devices require additional slot height, the MiX Module can be adjusted to the 12″ height (see previous page for instructions).

To accommodate the increased height of this module configuration, the 2 steel shelves in the cart will need to be lowered to their alternate position. In this configuration, the MiX Cart can accommodate up to 2 MiX Modules, providing a maximum capacity of 30 devices.

1. Before you begin, ensure all devices are unplugged and removed from the cart.
2. Disengage the MiX Module slide locks from the front of the cart and unplug the modules from the back of the cart.
3. Use the security bit (included in the hardware pack) with a manual or powered bit driver to remove the 4 screws that hold each of the steel shelves in place (2 in front, 2 in back). The shelves are supported by tabs that prevent them from falling once the screws are removed.
4. With the help of a 2nd person, lift the lower steel shelf off of its tabs and lower it to the next set of tabs down (about 3″ below; approximately 7″ from the inside bottom of the cart).
5. Again, with the help of a 2nd person, now lift the upper steel shelf off its tabs and lower it to the next set of tabs (about 3″ below; approximately 20.5″ from the inside bottom of the cart).
6. Replace and tighten the previously removed screws, 4 in each shelf.
7. You are now ready to reinstall the MiX Modules into the back of the cart. When correctly positioned, the feet of the module should nest into the round cutouts in the shelf.
8. Plug in the power cable and Cat 6 Ethernet cable from each MiX Module back into the cart.
9. From the front of the cart, engage both slide locks for each module to secure them to the cart interior.

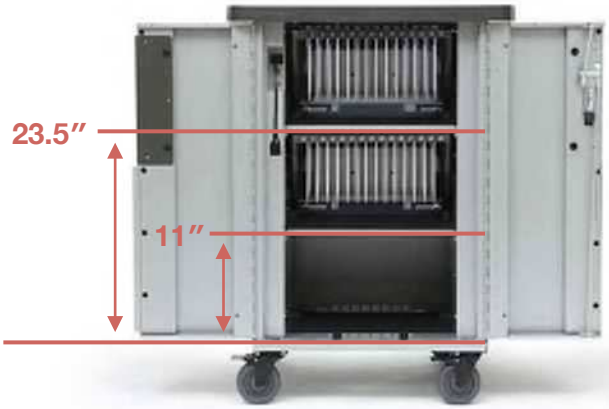

3 Module MiX Cart with shelves set for 10″H MiX Modules

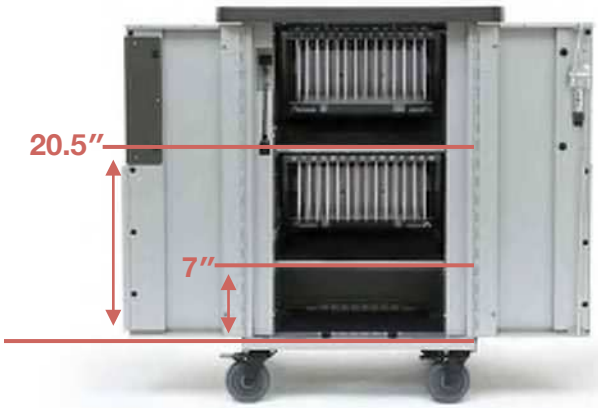

2 Module MiX Cart with shelves set for 12″H MiX Modules





WARNING: This Safe User Label is attached to the side of the cart, warning that the cart may tip over if transported incorrectly, which could cause injury.

- Do not allow children under 16 to move cart. Only adults should move this cart.
- Move the cart slowly
- Apply moving force on the narrow dimension.
- Always push using the handles. Push the cart, do not pull it.
- Engage the directional lock casters when moving the cart for added stability & safety.

WARNING: Relocating audio and/or video devices to a cart not specifically designed to support audio and/or video devices may result in death or serious injury due to the cart collapsing or over turning onto a child.

WARNING: Death or serious injury may occur when children climb on a cart. A remote control or toys placed on the cart may encourage a child to climb on the cart and as a result, the cart may tip over on to the child.

Safe Use Instructions



- The socket outlet shall be installed near the cart and shall be easily accessible.
- Make sure all devices do not exceed the maximum load rating of 12 amps.
- Power strips inside cart are intended only for charging compatible devices. Any other use may cause overload.
- Do not move cart by pulling the power cord. Before moving cart from one room to the next, wrap power cord around the cord winder located on the side of the cart.
- Do not plug the cart in if the switch, receptacle(s), or power cord has been damaged. Contact Bretford or a qualified electrician before attempting to make any type of electrical repair or parts replacement.
- Engage locking casters when cart is not in transit.
- Do not block ventilation holes on cart. Proper air flow is required for safe operation.
- Cart is not designed to be operated by a child or student. Adult operation and supervision is recommended at all times.
- Liquids should not be stored in, set on or placed inside the cart.
- Only clean the surfaces of cart with soft dry cloth. Do not use liquid or spray or abrasive cleansers. Use only disinfecting wipes containing no bleach.
- Product is for indoor use only.
- User can plug in up to 45 devices at one time.
- Turn power switch off before plugging in devices
- Turn power switch off before unplugging the cart.
- Do not pull the cart. Always push cart using the handles. Use extra caution on ramps and thresholds.
- Do not plug the power cord into another extension cord or re-locatable power tap.
- Be sure to turn power switch off and unplug cart before moving to a different location.
- Ensure casters are locked before opening the cart doors.
- Be sure to lock up cart in a secure environment after every use.
- Do not share the lock combination code with any unauthorized persons.

MEDIA STORAGE SYSTEMS

4101: 2 column media storage cabinet. however owner will need to approve selection as this will come from Signal and should show up on their drawings



SMART, SECURE STORAGE THAT YOU CONFIGURE TO FIT YOUR NEEDS.

Wenger®
Your Performance Partner

MEDIA STORAGE ROOM TRANSFORMATION

The media storage room at Henry Sibley High School in Mendota Heights, Minnesota faced a challenge most media departments do – managing lots of equipment that transitions in and out of the room several times per week. Staff and students relied on old bookshelves, file cabinets, wall hooks (and the floor) for storage. Wenger's new Media Storage creates an organized space to protect and manage their valuable equipment.





"Before Wenger, we just winged it. Our media storage room was a mix of old library shelves, cabinets that other departments didn't want anymore and a used peg board. We had a multitude of users for various events and it was tough to keep it all organized. Wenger stepped in and put us back on the right path. Now we have cabinets designed for AV storage with hooks, drawers and racks suited to the audio-visual world. There's a designated home for every piece of equipment, cable and adapter. We won't be winging it anymore – we've got Wenger.

– Dann Hurlbert, AV Specialist and Film Studies Instructor, Henry Sibley High School, Mendota Heights, MN

WENGER KNOWS STORAGE – INSIDE AND OUT

For over 65 years Wenger has been building equipment for musicians, teachers, conductors, athletes and students. And we've learned a lot about smart design and durability along the way. When it comes to managing your valuable instruments, projectors, microphones, adaptors, etc., we understand how important organization and security are. Introducing a storage system for media and audio/visual equipment. It's storage so unique, you can order exactly the storage configuration you need!

Flexibility – Choose what you need: fixed or mobile storage, in different sizes. Mix and match interior components with shelves, slide out shelves, file drawers and 4" (102 mm) drawers. Rackmount sections available for easy access to electronic components and organizer option available for fixed storage.

At the time of purchase, you pick what you need. If your needs change, you can order different components to reconfigure your existing cabinets. Components are built to fit all of our cabinets, providing flexibility to move drawers or shelves from unit to unit.



Security – Cabinets come with full-length wood doors, secured with metal lockable latch.

Ease of Ordering – We provide online tools and phone consultation to help you decide what will work best for your needs and equipment. Go to wengercorp.com/mediacabinets

Durability – Made to last with bolt through construction on hinges and doors, polyester laminate, tested to withstand institutional use. Mobile models come with a thermofoil wrapped top panel for scratch and stain resistance.

Made for media use – Cable management and vented top panel for use with electronic equipment. Power strips and wire access. Rackmount option tips open to allow easy access. Adjustable and slide-out shelves and drawers.

Like most of our storage cabinets, Wenger Media Cabinets are GREENGUARD certified to protect indoor air quality.

Cabinets are shipped assembled. Shelves, drawers and other accessories can be added and positioned as needed.

FIXED MEDIA CABINETS

When you consider just how valuable all your facility's media equipment is, it makes sense to store and secure it in a way that protects your investment.

Wenger's fixed cabinets transform a chaotic storage area into one you can be proud of.

Fixed media cabinets come in three types: Standard, Rackmount and Organizer. Choose the type you need then add shelves, drawers and other accessories (shown on back cover).





Two column cabinet with Rackmount type on the left and Organizer on the right. Shown in Cherry finish.

One column Standard cabinet. Shown in Graphite finish.

CONSTRUCTION

- Size: 1 column: 21½"w x 24"d x 85⅝"h (546 w x 610 d x 2175 mm h)
  2 column: 42"w x 24"d x 85⅝"h (1067 w x 610 d x 2175 mm h)
- Cabinet is constructed of ¾" (19 mm) thick industrial grade composite wood with no added formaldehyde
- Panels are finished with thermally fused polyester laminate in Wenger standard colors
- Full locking wood doors
- Top venting holes to dissipate heat
- Wire management clips to hold wires
- Steel pilaster rail to allow for mounting of shelves and drawers and ability to reposition along its length
- Four 5-knuckle steel hinges with powder-coat painted finish, through-bolted to door and side panels
- Ten-year warranty



Standard
Our base model, perfectly suited for filling with drawers and shelves from top to bottom.



Organizer
Wire grids on the inside back and door panels let you add hooks and baskets and holders.



Rackmount
Choose one, two or three rackmount sections. Each holds seven rackmount units. Power strip included.

MOBILE MEDIA CABINETS

As the level of technology in today's educational environments skyrockets, the need for connecting students to various media increases as well. Wenger's Mobile Media Storage Carts are portable, lockable, media hubs that will get your technology where it needs to be. It has a durable worksurface on top, plenty of room for electronics inside and is easy to maneuver. Like the Wenger Fixed Media Cabinets, these come in one or two-column designs and are configurable with many of the accessories shown on the back cover.



Two column cabinet with Rackmount type on the left and Standard on the right. Shown in Solar Oak finish.

One column Standard cabinet. Shown in Fusion Maple finish.

CONSTRUCTION

- Size: 1 column: 32"w x 24 5/8"d x 42"h (813 w x 625 d x 1067 mm h)
  2 column: 48 1/4" x 24 5/8"d x 42"h (1226 w x 625 d x 1067 mm h)
- Cabinet is constructed of ¾" (19 mm) thick industrial grade composite wood with no added formaldehyde
- Worksurface is thermofoil over composite core for high wear resistance
- Panels are finished with thermally fused polyester laminate in Wenger standard colors
- Full locking wood doors
- Durable, smooth rolling swivel casters
- Locking rear access door
- Cable management with clips, cable pass through and cord wrap
- Steel pilaster rail to allow for mounting of shelves and drawers and ability to reposition along its length
- Two 5-knuckle steel hinges with powder-coat painted finish, through-bolted to door and side panels
- Ten-year warranty



Slide-Out Shelf
A full width slide-out shelf for a laptop, keyboard or added worksurface area. Included with the two-column model or as an add-on with the single column design.



Mobility
Sturdy handles and wheels make transport easy.



Rear Access
It's easy to access your cables and connections with a lockable access door on the back.



Standard
Our base model, perfectly suited for filling with drawers and shelves from top to bottom.



Rackmount
Choose the rackmount model that holds seven rackmount units. Power strip included.

CONFIGURABILITY – MAKE IT YOUR OWN

FULLY CONFIGURABLE TO FIT YOUR NEEDS.

Every facility's storage needs are different, so a cookie-cutter storage solution just won't do. Wenger's new mobile and fixed storage cabinets are configurable – giving you the flexibility to make the most of your storage space. Add drawers, shelves, hooks, baskets and more. Just contact your representative or use our new online configurator to create your media storage cabinet today. Go to www.wengercorp.com/mediacabinets



Rackmount
19" (483 mm) standard 7-unit rackmount. Order up to three per column in a fixed cabinet and one per column in a mobile cabinet. (Power strip included.)



4" Drawer
(102 mm) Steel body drawer. A great spot for mics, adapters, clamps, zip ties, tools, etc.



Adjustable Shelf
Brackets on the cabinet let you add shelves right where you need them.

Fixed Shelf
All cabinets come with one or two fixed shelves.



Combination Keypad
You can opt for a combination keypad instead of a standard lock if you wish.



Power Strip
Optional 6-unit power strip to add to standard cabinets.



File Drawer
Perfect storage for instructional materials, manuals, warranties and other paperwork.



Slide-Out Shelf
Add a slide out shelf to create an instant workspace for laptops, electronics, or minor repairs.



Cable Pass Through
Easily route cables or power cords out the side of your cabinet.



Storage Bins
Semi-opaque bins are available for storing small parts, connectors and more.

Accessories (Organizer model)**:**
The grid that comes on the back panel and inside door of the Organizer model allows you to add holders and hooks as needed. (not available for mobile models)



Storage Basket



Cable Minder



Single Hook



Mic Stand Holder



CD Holder

Optional Accessories ✔	Fixed Standard	Fixed Organizer	Fixed Rackmount	Mobile Standard	Mobile Rackmount
Fixed Shelf	Included	Included	Included		Included
Adjustable Shelf	✔	✔	✔	✔	✔
Slide-Out Shelf	✔		✔	✔*	✔*
4" (102 mm) Drawer	✔		✔	✔	✔
File Drawer	✔		✔	✔	✔
Rackmount			✔		✔
Power Strip	✔		Included	✔	Included
Lock with Key	Included	Included	Included	Included	Included
Keypad Lock	✔	✔	✔	✔	✔
Storage Basket		✔			
Cable Minder		✔			
Single Hook		✔			
CD Holder		✔			
Mic Stand Holder		✔			

All fixed and mobile cabinets can be ordered in single or double column. *Double mobile unit comes with full-width slide-out shelf included.

Color Options (All models)

Cherry | Evening Tigris | Fusion Maple | Solar Oak | Wenger Maple | Oyster | Pebble | Graphite

Mobile cabinet worksurface available in Shark Grey only.

Wenger® JR CLANCY GEARBOSS

© 2019 Wenger Corporation
USA/2-19/200/W/LT0378D

WENGER CORPORATION Phone 800.4WENGER (493-6437) Worldwide +1.507.455.4100 | Parts & Service 800.887.7145 | Canada Office 800.268.0148 | wengercorp.com
555 Park Drive, PO Box 448 | Owatonna | MN 55060-0448

JR CLANCY Phone 800.836.1885 Worldwide +1.315.451.3440 | jrclancy.com | 7041 Interstate Island Road | Syracuse | NY 13209-9713

GEARBOSS Phone 800.493.6437 | email gearboss@wengercorp.com | gearboss.com | 555 Park Drive, PO Box 448 | Owatonna | MN 55060-0448

Mobile Media Storage Cabinets

- Cabinets are constructed 3/4" (19 mm) thick industrial grade composite wood with no added formaldehyde and polyester laminate finish in Wenger standard colors.
- Bottom is constructed of Vencore plywood for extra strength.
- Edging is 1/8" (3 mm) radiused PVC.
- Available in one column or two column sizes:
  - 1 column 32" w x 24-5/8"d x 43" h (813 x 625 x 1092 mm).
  - 2 column 48-1/4" w x 24-5/8"d x 43" h (1226 x 625 x 1092 mm).
- Full locking wood doors with 270 degree hinges to swing door fully open.
- Each column of the cabinet is available in two types:
  - Standard – allows for addition of shelves and drawers.
  - Rack mount – Steel 7-unit rack mount section with one mounted power strip included and cage nuts to attach electronic components. Unit folds down on hinge for access to cords in back (fixed shelf above and below rack mount).
    Two column has space above and below for storage.
    One column has space to add 4" (102 mm) drawer, slide out shelf or both.
- Two column cabinet includes full width slide out shelf width 39-1/2" wide x 16" deep (1003 x 406 mm).
- Cable management with clips, cable pass through and cord wrap.
- Steel pilaster rail allows for mounting of shelves, slide-outs and drawers with ability to reposition along the length at 1/2" (13 mm) increments.
- Work surface top is constructed of thermofoil wrap over composite panel for high wear resistance. It includes an integrated handle and cup holder.
- 4" (102 mm) durable, smooth rolling swivel casters.
- Drawers and slide-outs are preinstalled but can be repositioned.
  Adjustable shelves are packaged loose for customer preferred installation.
- Two 5-knuckle steel hinges per door with powder-coated paint finish, through-bolted to door and side panels.
- Front keyed lock comes standard or may be substituted for a programmable digital lock.
  Rear keyed lock allows additional access to components.
- Environmental attributes and LEED compliance for this product can be found at www.wengercorp.com/GREEN or by contacting your Wenger representative.
- Cabinets are shipped assembled.
- Ten-year warranty.
  Optional power strips, digital locks and other electronic equipment are covered by the individual manufacturer's warranty.

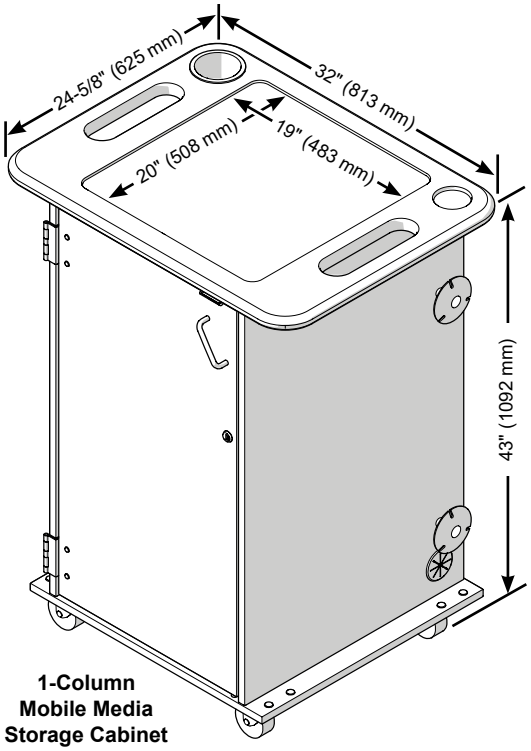

1-Column Mobile Media Storage Cabinet

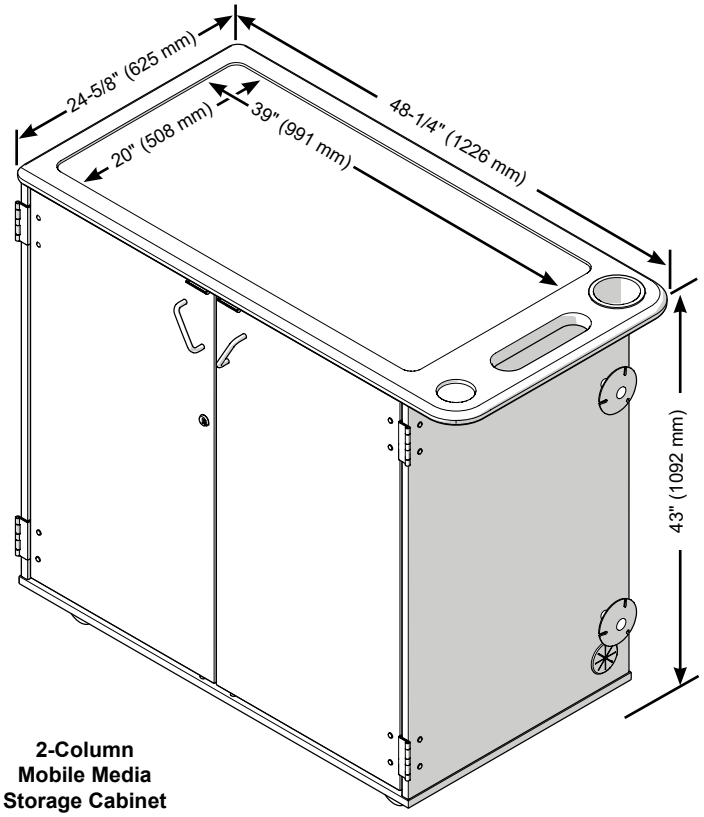

2-Column Mobile Media Storage Cabinet

Optional Interiors

- Adjustable shelves, notched to allow space for cords.
- Slide out shelves, can be repositioned along pilaster.
- 4" drawer is constructed of steel.
- File drawer is constructed of steel and includes adjustable mounting bar for hanging file folders, standard or legal sized.
- 19" Steel 7-unit rack mount section with one rack mounted power strip.

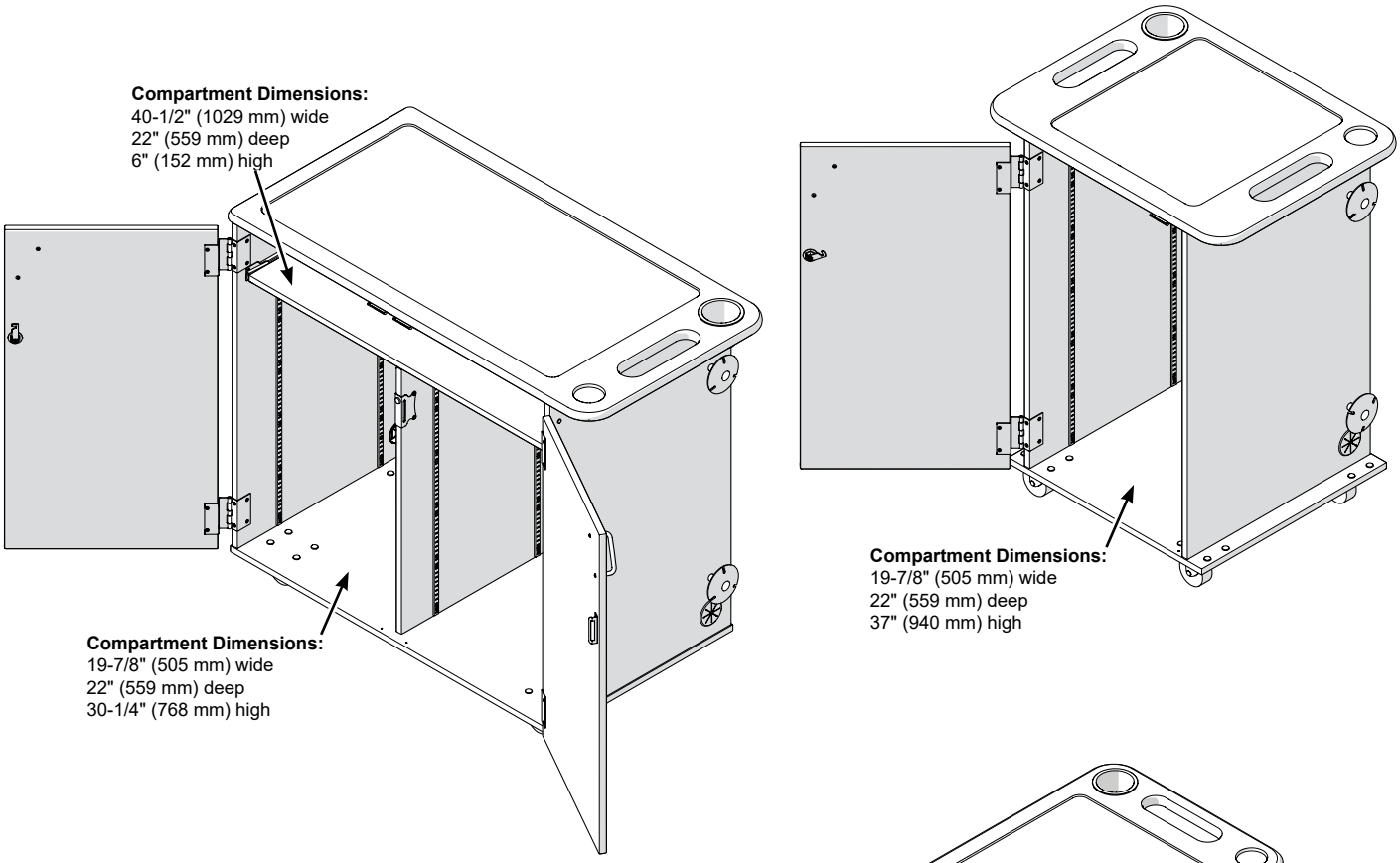

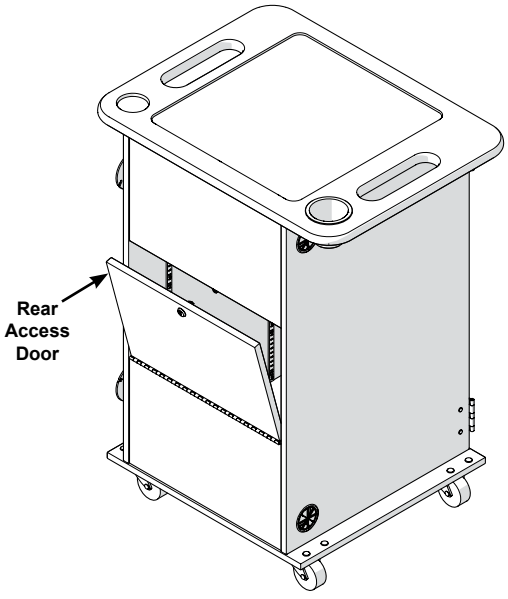

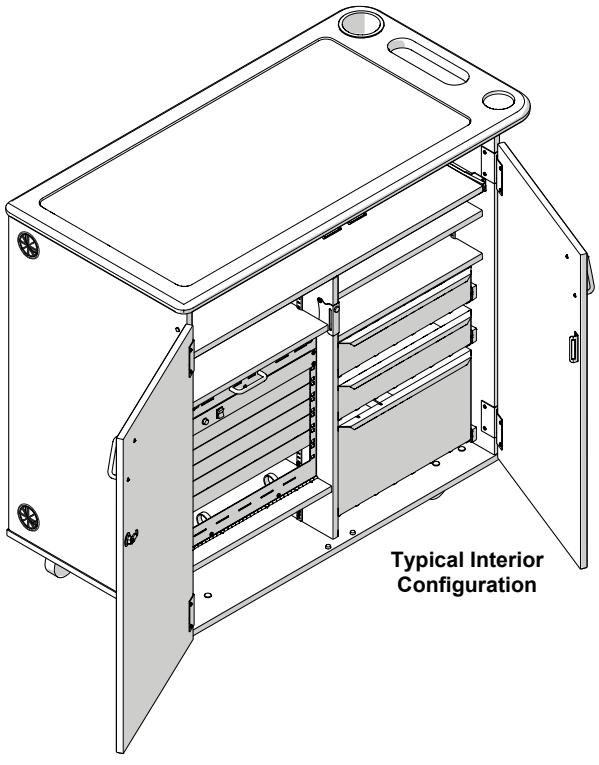

© 2018 Wenger Corporation
USA/2018-09/W

WENGER CORPORATION Phone 800.4WENGER (493-6437) Worldwide +1.507.455.4100 | Parts & Service 800.887.7145 | Canada Office 800.268.0148 | wengercorp.com
555 Park Drive, PO Box 448 | Owatonna MN 55060-0448

JR CLANCY Phone 800.836.1885 Worldwide +1.315.451.3440 | jrclancy.com | 7041 Interstate Island Road | Syracuse NY 13209-9713

GEARBOSS Phone 800.493.6437 | email gearboss@wengercorp.com | gearboss.com | 555 Park Drive, PO Box 448 | Owatonna MN 55060-0448

4104

IDEA FOR CABINET FOR GAMING MEDIA



Asymmetrical open storage gives this multimedia console a unique, modern flair. Four drawers provide a place to organize electronics, remotes, or books. A sleek black finish makes this entertainment center an ideal addition to your home media station. Open compartments makes for easy access to media equipment.

Weights & Dimensions

Overall	
	28.5'' H x 68'' W x 16'' D
Shelf	
	12'' H x 26.5'' W x 13.5'' D
Legs	
	28'' H
Maximum TV Screen Size Accommodated	
	70"
Weight Capacity	
	205 lb.
Overall Product Weight	
	113 lb.

SOURCE: https://www.allmodern.com/furniture/pdp/madelina-media-tv-stand-for-tvs-up-to-70-a000135546.html

Specifications

MAIN CAMERA

IMAGE PICK-UP DEVICE	12 Megapixel CMOS
EFFECTIVE PIXELS	3840 x 2160 (16:9) 8.3M 3620x2640 (4:3) 9.3M
RESOLUTION	1,600 TV lines (center)
ZOOM	12x Optical / 12x Digital / 2x Sensor
FOCUS MODE	Zoom sync AF / One-push AF
FOCUS RANGE	WIDE end: 5cm～∞ TELE end: 20cm～∞
SHOOTING AREA	17 in x 12.6 in (4:3) up to A4
ILLUMINATION	Upper light (LED)
HDMI OUTPUT	4K, 1080p, 720p
RGB OUTPUT	1080p, 720p
USB OUTPUT	4K, 1080p, 720p, QUXGA, UXGA...
HDBaseT OUTPUT	4K, 1080p, 720p
NETWORK CONTROL	TCP/IP Control
IMAGE ADJUSTMENT	Brightness, White balance, Contrast, Contour correct, Image mask
IMAGE MODES	Normal, Emphasis, Color emphasis, Black/White, DLP projector

GENERAL

OPERATING PANEL	Power, AF, Brightness, Freeze, Image rotation, Capture Image Video record, Settings, Input Select
LCD PANEL	HQ (800x480) 5" Capacitive-type
INPUT TERMINAL	HDMI x2, RGB Dsub15x1
EXTERNAL CONTROL	RS-232C, (inc.setting menu lock) USB, Remote control, network control
RECORDING/PLAYBACK	SD card, USB flash device (only photo), internal memory storage
AUDIO	INPUT: External microphone (HDMI) OUTPUT: Line out
DIMENSIONS	11.7in x 19in x 18.8in (set up) 11.7in x 19in x 5.2in (folded)
WEIGHT	9.9lbs

All specs are subject to change without prior notice

Contact us

For more information visit
www.elmousa.com

Phone:
516.501.1400
1800.947.ELMO

Email:
elmo@elmousa.com



PX-30
Visual Presenter



4K ULTRAHD

Present
Vividly



288x Zoom Capability

With 12x optical, 12x digital zoom, and 2x sensor zoom, the PX-30 is capable of an incredible 288x zoom so you can see every vibrant detail.

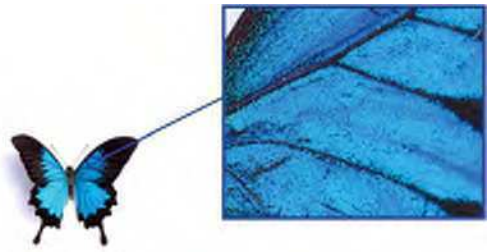



Ultra 4K Image

The PX-30 has a specially crafted lens that captures rich Ultra 4K image and can record video in 4K at 30fps and Full HD at 60fps.

Touch Screen Panel

The PX-30 has a sleek, easy-to-navigate touch screen panel with a 5" LCD screen that previews your image in real time.





Wide Screen Mode

The PX-30 offer a variety of shooting modes including 4:3, wide screen 16:9, and a capture area of up to A4 portrait and A3 landscape.

Outputs

HDMI, RGB, USB, and HD_BaseT Outputs



USB/SD Storage

Store your lessons via USB or SD to review later



Magnetic Base Plate

Optional magnetic dry marker surface for writing



ELMO

For more information visit
www.elmousa.com

DATA SHEET

Polycom® Ceiling Microphone Array

Extraordinary room coverage with superior audio pickup



Polycom's digital microphone array is the only audio pickup device on the market that offers consistent, reliable, 360-degree voice pickup and Polycom StereoSurround™ audio. When paired with Polycom video conferencing system or installed audio solutions, the audio capture and delivery is unmatched.

Polycom's easy-to-mount Ceiling Microphone Array eliminates conference table clutter and stays out of the way of pencil tappers and paper rustlers, while providing the same clear, crisp audio delivery as our tabletop microphone arrays. Unobtrusively, the microphone elements are located in the room, while the electronics are mounted above the ceiling tile, so you don't even know it's there. This makes the Ceiling Microphone Array the perfect solution for any application, large or small, from the classroom to the boardroom to the huddle room, anywhere "out of sight, out of mind" is a good philosophy.

Acoustic Fence™ Technology

Open workspaces are prevalent but can create challenges for effective collaboration across remote locations. Create a virtual fence in open workspaces with RealPresence® Group Series Acoustic Fence technology to isolate sound capture within the fence. Ceiling Microphone Arrays define the fence area so audio outside of the beam is attenuated. Remote participants are no longer forced to hear distracting noises and can focus on important problem solving within the meeting instead.

Stereo pickup with a single microphone array

The Ceiling Microphone Array eliminates acoustic noise coming from the ceiling, while boosting sensitivity gain even when the speaker is directly beneath the microphone. To achieve up to 1,600 square feet of coverage, simply connect up to four Ceiling Microphone Arrays to a single Polycom® RealPresence® Group Series 500 or 700 video system. Adjustable drop height from ceiling will accommodate any room size or environment. This huge coverage area is up to three times larger than competitive unidirectional ceiling microphones. It is delivered as a complete kit with all mounting hardware required for easy installation.

Polycom Ceiling Microphone Arrays seamlessly integrate with the RealPresence Group Series video systems and Polycom SoundStructure® installed audio solutions, so you'll always enjoy the best audio quality in echo cancellation, noise reduction and automatic gain control.

Benefits

- **Superior audio pickup** — Adjustable drop height provides extraordinary voice pickup from anywhere in the room
- **Award-winning technology** — Makes full use of Polycom's digital microphone and 22 kHz StereoSurround™ audio
- **Superb room coverage** — 360-degree coverage from three cardioid elements can handle a room up to 1,600 square feet with four arrays, three times greater than competitive unidirectional products
- **Capture the speaker** — The only ceiling microphone on the market with a directional microphone beam, automatically pointing to the person speaking
- **Neat, easy installation** — Complete kit includes everything you need to hide electronics in the ceiling, out of the way of the floor and tabletop

Product Specifications

Primary solution includes

- Microphone array available in white or black
- Electronics enclosure with ceiling mounting hardware (UL 2043 compliant and suitable for use in air-handling spaces)
- (1) 24” (60 cm) microphone interface cable*
- (1) 50’ (1524 cm) plenum C-Link 2 cable (RJ45)
- Wall plate
- Walta to RJ45 adapter cable used for installations with RealPresence Group and HDX 6000/7000/8000 series systems

Extension kit includes

- Microphone array available in white or black
- Electronics enclosure with ceiling mounting hardware (UL 2043 compliant and suitable for use in air-handling spaces)
- (1) 24” (60 cm) microphone interface cable*
- (1) 25” (762 cm) plenum C-Link II cable (RJ45)

Digital microphone specifications

- 360-degree directional pickup
- Three cardioid elements per microphone – elements spaced 120 degrees apart
- Each Ceiling Microphone Array covers a 24’ diameter
- Total coverage area for a single Ceiling Microphone Array is 400 square feet

Video System Compatibility	Maximum CMAs Supported
RealPresence Group 500 & 700, SoundStructure C12, SoundStructure C16, HDX 9000	Up to 4
HDX 8000	Up to 3
RealPresence Group 300/310, SoundStructure C8, HDX 7000	Up to 2
HDX 6000	Up to 1

Audio features**

- Dynamic microphone steering
- Full-duplex digital audio
- Instant adaptation echo cancellation
- Automatic noise suppression (ANS)
- Automatic gain control (ACG)

Product characteristics

- Dimensions (W/D/H): 4”/6”/1⅝”, 101.6 mm/152.4 mm/41.3 mm
- Weight 14 oz; 397 kg

Installation guidelines

- Avoid interference with fluorescent lighting
- Avoid close proximity with AC vents
- Secure mounting ears for electronic boxes
- Avoid all other obvious sources of noise
- Microphone array should be 7-8’ above the floor
- Maximum cable distance to the primary (first) electronics box is 100’; maximum cable distance between extensions is 25’

Warranty

- One-year return for factory parts and labor

Usage environment ideas

- K-12, primary and secondary school locations
- Higher education including universities, colleges, community colleges, technical colleges
- Corporate training rooms
- Auditoriums
- Large lecture halls
- Medical training facilities
- Corporate boardrooms
- Military training/distributed learning rooms, command centers, briefing centers
- Continuing education center
- Museums or hospitals

* Also available as an option: 6’ white or black

** Features supported with Polycom room video codecs and SoundStructure installed audio solutions

About Polycom

Polycom helps organizations unleash the power of human collaboration. More than 400,000 companies and institutions worldwide defy distance with video, voice and content solutions from Polycom. Polycom and its global partner ecosystem provide flexible collaboration solutions for any environment that deliver the best user experience and unmatched investment protection.

Polycom, Inc.
1.800.POLYCOM
www.polycom.com

Polycom Asia Pacific Pte Ltd
+65 6389 9200
www.polycom.com.sg

Polycom EMEA
+44 (0)1753 723282
www.polycom.co.uk

© 2018 Polycom, Inc. All rights reserved. All Polycom® names and marks associated with Polycom products are trademarks or service marks of Polycom, Inc. and are registered or common law marks in the United States and other countries. All other trademarks are property of their respective owners. No portion hereof may be reproduced or transmitted in any form or by any means, for any purpose other than the recipient’s personal use, without the express written permission of Polycom.

34180-0518

DATA SHEET

Polycom® EagleEye™ Series Cameras

High definition video imaging

Polycom® EagleEye™ cameras provide the ultimate experience to optimize video collaboration. EagleEye™ IV and EagleEye™ Acoustic cameras are designed to meet your varying environments and applications in conjunction with Polycom® RealPresence® Group Series video systems. From huddle rooms, to desktops, classrooms to customized board rooms, Polycom EagleEye cameras deliver best in class video quality to all participants.

All Polycom EagleEye cameras offer the following features:

- High definition video transmission
- Clear, crisp natural colors from precisely tuned optics
- Quick, fluid movements with sharp focus
- Camera power supplied by Polycom RealPresence Group Series video system eliminating the need for a power supply

Multiple camera options to meet your needs

EagleEye IV

The Polycom EagleEye IV 4x and 12x cameras have a completely digital camera sensor to capture incredible detail for more natural communication. With a wide field of view, these cameras are flexible enough to use in any room environment, from a small huddle room to a large boardroom. With the optional Polycom EagleEye Digital Extender, the cameras can be mounted up to 330 feet away from the video system, providing you the flexibility to move the camera where you need it. Combine the EagleEye IV camera with EagleEye™ Producer or EagleEye™ Director II for an automated camera experience.

EagleEye Acoustic

The Polycom EagleEye Acoustic camera is an optimal solution for a smaller environment. With built-in microphones and small footprint, this camera will easily blend into an executive office or huddle room.



Polycom EagleEye IV 12x Camera (silver)



Polycom EagleEye IV 4x Camera (black)



Polycom EagleEye Acoustic Camera

	EagleEye IV	EagleEye Acoustic
		
Camera type	1/2.33” CMOS	1/2.7” CMOS
H/V resolution	1920 x 1080	1920 x 1080
Output	SMPTE 296M 1280 x 720p60, SMPTE 274M 1920 x 1080p, 60/50	SMPTE 274M 1920 x 1080p, 30/25
Lens focal length	f=3.76–37.6 mm	f=4.37 mm
Lens F#	1.2	2.0
Zoom	4x optical (black), 10x/12x (silver) optical/digital	2x digital
Focus	Auto	Auto
Horizontal field of view	65°, 85° with wide angle adaptor	67°
Vertical field of view	39°	39°
Min. illumination	50 lux	50 lux (F2.0)/50 IRE
Exposure	Auto-iris, AGC	AGC
SNR	50 dB	50 dB
Pan range	+/-100°	+/-24°
Tilt range	+20/-30°	+/-14°
I/O	Mini-HDCI— Hirose DH60-37P	HDCI, 60 pin (incl: power, Comm, IR, HDMI, audio)
IR detectors	•	•
Power consumption	12 v @ <1.2A power	200 mA @ 12V DC
Dimensions (W x H x D)	218 x 138 x 118 mm	45.4 x 43 x 111 mm
Built-in-microphones		•
Video system compatibility	RealPresence Group Series	RealPresence Group Series
Room size	Small, medium, large	Small

* All camera data is subject to change without notice and performance may vary based upon environmental conditions.

Automated camera options

EagleEye Producer Kit—Utilizing the latest in facial recognition technology, the system continually scans the room and seamlessly commands the MPTZ camera to appropriately frame the users. This intelligent method of dynamic framing greatly improves the user experience and solves the common problem of wide angle shots that fail to immerse participants in a meeting. EagleEye Producer enables you to see true expressions and vital non-verbal communications for more naturally effective meetings.

Compatible with EagleEye IV 4x and 12 cameras. The EagleEye Producer mounting kit uses the Universal Camera mount to mount the EagleEye Producer and the EagleEye camera on the wall, display or tripod.

EagleEye Director II Kit—Changes the face of group video communications by enabling close-up views of every speaker in a video conference, regardless of their location or the number of people in the room. By highlighting, zooming in, and framing active speakers, everyone can clearly see critical facial expressions and read the subtle body language which enables deeper engagement and more effective meetings.

Compatible with EagleEye IV 12x cameras.

Available accessories

Wide angle lens—extends the field of view for EagleEye IV to 85°

Cables—The EagleEye IV camera uses a mini-HDCI to HDCI cable which comes in a variety of different sizes to meet your needs:

- 300mm (2457-64356-030)
- 457mm (2457-64356-018)
- 1m (2457-64356-100)
- 3m (2457-64356-001)
- 10m (2457-64356-101)

EagleEye Digital Extender—allows EagleEye IV or EagleEye Acoustic, sans audio, to be mounted 330 feet away with a Cat6a cable to extend the video, control and power from the source to the destination.

Digital Breakout Adapter—breaks out the EagleEye IV or EagleEye Acoustic to HDMI type connector and DB9 connector. One version at the camera also provides power to the camera. At the codec the Digital Breakout Adapter connects to an available HDCI input.

Universal Mounting Shelf—supports the EagleEye IV cameras. Provides necessary parts to mount the EagleEye IV on the wall, a tripod or a display.

Codec Shelf Mounting Kit —allows the RealPresence Group Series 300, 310 or 500 and EagleEye™ IV camera to be mounted together in conjunction with the Universal Mounting Shelf.

Privacy Cover—For added security, the privacy cover for either the EagleEye IV or the EagleEye III secures to the camera allowing you to open and close the cover as needed.

About Polycom

Polycom helps organizations unleash the power of human collaboration. More than 400,000 companies and institutions worldwide defy distance with video, voice and content solutions from Polycom. Polycom and its global partner ecosystem provide flexible collaboration solutions for any environment that deliver the best user experience and unmatched investment protection.

Polycom, Inc.
1.800.POLYCOM
www.polycom.com

Polycom Asia Pacific Pte Ltd
+65 6389 9200
www.polycom.com.sg

Polycom EMEA
+44 (0)1753 723282
www.polycom.co.uk

© 2017 Polycom, Inc. All rights reserved. All Polycom® names and marks associated with Polycom products are trademarks or service marks of Polycom, Inc. and are registered or common law marks in the United States and other countries. All other trademarks are property of their respective owners. No portion hereof may be reproduced or transmitted in any form or by any means, for any purpose other than the recipient's personal use, without the express written permission of Polycom.

28930-0517

ADVERTISEMENT

Epson - Pro Cinema 6050UB 4K 3LCD Projector with High Dynamic Range - Black

Model: EPSON 6050UB PROJ V11H928020M **SKU:** 6344892

★★★★★ **5.0** (1 Customer) | 1 Answered Question



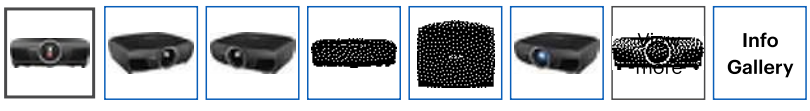

Price Match Guarantee

$3,999.98 or **$166.67/mo.*** suggested payments with **24-Month Financing**

Show me how >

Protect your product ★★★★☆ (4)

2 Years $499.99	4 Years $699.99	No plan selected

Help

Learn about Standard Protection Plans

Specialty Item

This item is exclusively available at our stores with Magnolia Home Theater consultants. They'll help you find what you need.

Find a store with Magnolia Home Theater

In Store Only

☐ Compare ☐ Save

Special Offers

Save $50 on TV Connect and Setup

Cardmember Offers

24 Month Financing

12 Month Financing

6 Month Financing

Get rewards



Top

People also viewed


Epson - Home Cinema 5050UB 4K PRO-UHD 3LCD Projector with...
(16)
$2,699.98
Compare


Sony - VPL-VW295ES 4K SXRD Projector with High Dynamic Range -...
(14)
$4,999.98
Compare


Epson - Home Cinema 5050UBe 4K PRO-UHD 3LCD Projector with...
Not yet reviewed
$2,999.98
Compare

Overview

Help

Description

Turn media rooms into movie theaters with this Epson Pro Cinema projector. Native 4K resolution makes content look detailed, while a contrast ratio of up to 1,200,000:1 enriches images with deep blacks and vivid whites. This Epson Pro Cinema projector has an advanced 15-element lens that delivers consistently uniform, distortion-free images.

Projector Buying Guide ›

Features

High dynamic range (HDR) creates a more realistic picture

HDR technology expands the contrast and color range of the pixels on your projector to reveal a better, brighter, more colorful image. The picture quality is noticeably more natural.

±30° vertical keystone correction

For distortion-free images.

2600 lumens of color brightness and 2600 lumens of white brightness

Boost display visibility and produce clear, vibrant on-screen images.

1,200,000:1 contrast ratio

Provides a multitude of shades between black and white for rich color saturation.

Lens shift

Vertical and horizontal lens shift for the ultimate installation flexibility.

3840 x 2160 (2 x 1920 x 1080) 4K PRO-UHD resolution

Delivers crisp, detailed high-definition images.

Dual HDMI inputs

Make it easy to connect to high-definition sources.

50" - 300" viewable screen size

Allows everyone in the room to enjoy a clear view.

5' - 62' projector distance
Allows flexible placement.

1.35 - 2.84:1 throw ratio range
Reproduces wide images in their correct proportions.

↑ Top

Supports a variety of signals
Including 480p, 720p, 1080i, 1080p, 480i, 576i and 576p for a wide range of compatibility options.

UHE 250W lamp
Delivers up to 3,500 hours of lamp life in normal mode for extended use.

20-31dB fan noise
Ensures quiet operation.

Included remote
Provides simple control from across the room.

Color brightness (color light output) and white brightness (white light output) will vary depending on usage conditions. Color light output measured in accordance with IDMS 15.4; white light output measured in accordance with ISO 21118.

What's Included

Epson Pro Cinema 6050UB

Spare projector lamp, ceiling mount kit, cable cover, wireless remote control, 2 x HDMI cable clamps

Manuals & Guides

Product Datasheet/Brochure (PDF)

Help

Specifications

Key Specs

Display Type	3LCD
Color Brightness	2600 lumens
White Brightness	2600 lumens
Contrast Ratio	120,0000:1
Projector Use	Home Theater

Dimension

Product Height	7.6 inches
Product Width	20.5 inches
Product Depth	17.7 inches
Product Weight	24.7 pounds

Display

Display Type	3LCD
Vertical Resolution ⓘ	2160p (4K)
Color Brightness	2600 lumens
	2600 lumens

	White Brightness	
	Contrast Ratio	120,0000:1
	Aspect Ratio ⓘ	16:9
	High Dynamic Range (HDR) ⓘ	Yes
	3D Technology	Yes
	Throw Ratio Range	1.35 - 2.84:1
Viewing	**Minimum Projector Distance**	5 feet
	Maximum Projector Distance	62 feet
	Minimum Viewable Screen Size	50 inches
	Maximum Viewable Screen Size	300 inches
Features	**Projector Use**	Home Theater
	Remote Control Included	Yes
	Computer Compatibility	None
	Kensington Security Slot	Yes
Lighting	**Lamp Included**	Yes
	Lamp Life	3500 hours
	Lamp Type	250W UHE
Exposure Control	**Focus Adjustment**	Powered
	Minimum Aperture ⓘ	2.0 f/
	Maximum Aperture ⓘ	3.0 f/
Connectivity	**Number of HDMI Inputs**	2
	Number Of USB Port(s)	1
	Input(s)	USB Type A, Mini-USB
	Video Input(s)	HDMI
Audio	**Speaker(s) Included**	No
General	**Noise Level**	31 decibels

↑ Top
Help

	Projector Mount Pattern	Universal
	Model Number	EPSON 6050UB PROJ V11H928020M
	Color	Black
	Color Category	Black
Warranty	**Manufacturer's Warranty - Parts**	3 years
	Manufacturer's Warranty - Labor	3 years
Other	**Product Name**	Pro Cinema 6050UB 4K 3LCD Projector with High Dynamic Range
	Brand	Epson
	UPC	010343944725

Top

Ratings & Reviews

Frequently Bought Together

From the Manufacturer

Help

People also bought

Page **1** of **4**



Epson - Universal Projector Ceiling Mount Kit for Most Projectors - White (117)

$104.99

Add to Cart



Elite Screens - Aeon CineGrey 3D Series 135" Projector Screen - Black (2)

Price Drop: $699.99

Add to Cart



Atlona - HDBaseT CAT6a/7 Tx and Rx HDMI Extenders with PoE - Black (7)

$499.99

Add to Cart

Klipsch - 6-1/2" 2-Way In-Ceiling Loudspeaker (Each) - White (2)

$188.99

Add to Cart



Klipsch - Reference Premiere Dual 8" 600-Watt Passive 2-Way Floor Speaker (Each) - Ebony (22)

$599.98

Add to Cart



Outdoor Movie Screen (548") ...
$17,749.00
Outdoor Movies ▾ Ad

· lg.com ▾

LG CineBeam Laser 4K UST HU85L - Red dot Award 2019 Winner
Ad "With its minimalist form, the **projector** blends well into stylish interiors"- Red dot 2019. Laser. UST (T/R 0.19) Up to 120 inch. 4K UHD. webOS. HDR 10. Dynamic Tone Mapping. Features: 4K UHD Resolution-3840 X 2160, 2500 ANSI Lumens, Ultra Short Throw.
Laser 4K UST Projector 2019 LG Cinebeam HU85LA

· bose.com ▾

Bose® Soundbar 500 - Powerful And Clear Acoustics - From Our Thinnest Soundbar
Ad Kick It Up A Notch With The Bass Module 500 & Save $50 Off. Enjoy Free 2-Day Shipping And Free Return. 30-day Risk Free Trial. Free Expedited Shipping. Highlights: Powerful Performance, Versatile Designs.
Bose® Soundbar 500 Bose® Soundbar 700
Bose® Official Site

Top

ADVERTISEMENT

Get the latest deals and more. Enter email address **Sign Up**

Best Buy app
Learn more ›

Help

My Best Buy ›
View Points & Certificates
Member Offers
Sign in or Create Account

Credit Cards ›
Make a Payment at Citibank
Check Balance at Citibank
Credit Card Offers
Apply Now

Orders & Returns ›
Order Status
Shipping, Delivery & Store Pickup
Return & Exchange Promise
Price Match Guarantee

Support & Services ›
Customer Service
Protection Plans
Schedule a Service
Trade-In Program
Product Recalls

Partnerships ›
Affiliate Program
Developers
Best Buy Education
Best Buy for Business
Advertise with Us

International Sites ›
Best Buy Mexico
Best Buy Canada

Corporate Information | Forums, Blog & More | Careers | Accessibility | Terms and Conditions | Privacy | Interest-Based Ads | California Privacy Rights | CA Supply Chain Transparency Act

Mobile Site

Give Feedback

Prices and offers are subject to change. © 2018 Best Buy. All rights reserved. BEST BUY, the BEST BUY logo, the tag design, MY BEST BUY, and BESTBUY.COM are trademarks of Best Buy and its affiliated companies.

Summary - Requisition 120197763

General

Status	✓ Completed (7/8/2019 10:41 AM)
Submitted	7/8/2019 8:53 AM
Cart Name	VR Project - Projector and Glasses
Description	
Purchase Order	P1202673
Requester	Scott Dipboye
Priority	Normal
Shopper	Tara Coe
Employee Family Owned Business	✗
Non Tax-Exempt	✗
Purchasing Contact	*no value*
Original Bid or Contract #	*no value*
Bid Code	*no value*
Campus Code	7 Center for Health Sciences
Board Approval	*no value*
Contract For Signature Attached	✗
Cost Match Invoices Only?	✗
PO Distribution Bypass	✗

Shipping

Ship To

Attn: Tara Coe
Room/Blg G64
Dept 170103 - Information Technology
OK State Univ
1111 W 17TH ST
TULSA, OK 74107
United States

Delivery Options

Expedite	✗
Ship Via	Best Carrier-Best Way
Requested Delivery Date	

Billing

Bill To

OK Corral
Oklahoma State University in Tulsa
OSU Budget and Finance
tulacct@okstate.edu
700 N Greenwood
Tulsa, OK 74106
United States

Credit Card Info

No credit card has been assigned.

Billing Options

Fiscal Year (Prior Purchasing approval required if selecting next fiscal year.)	20 2020
Received Purchasing approval prior to submitting requisition for next fiscal period.	✗

Accounting Codes

Chart	Fund	Commodity	Account
7 Center for Health Sciences	132191-7 Simulation Center	Computer Hardware Computer Hardware	704001 Noninv.D/P Equip

Internal Notes and Attachments

PO Clauses

Powered by JAGGAER | Privacy Policy

Internal Note	*no note*
Internal Attachments	
PO Type	*no value*
Work Order #	*no value*
Phase #	*no value*

PO Clauses

-18 Non-Appropriation
-19 Payment Terms
-9 FOB

Supplier / Line Item Details

Best Buy Business Advan Acct

Contract	*no value*
PO Number	P1202673
Quote number	

	Product Description	Catalog No	Size / Packaging	Unit Price	Quantity	Ext. Price
1 ✓	**Powerlite Pro Cinema 6050UB**	**PC6050UB**	**EA**	**3,999.98 USD**	**1 EA**	**3,999.98 USD**

Manufacturer Name	Epson	AIM Part #	*no value*	Internal Note	*no note*
Manufacturer Part Number	V11H928020M	AIM Bin #	*no value*	Internal Attachments	
		External Note	*no note*	PO Clauses	
		Attachments for supplier		*no clause*	

2 ✓	**Epson RF 3D Glasses**	**V12H548006**	**EA**	**99.98 USD**	**15 EA**	**1,499.70 USD**

Manufacturer Name	Epson	AIM Part #	*no value*	Internal Note	*no note*
		AIM Bin #	*no value*	Internal Attachments	
		External Note	*no note*	PO Clauses	
		Attachments for supplier		*no clause*	

Supplier subtotal **5,499.68 USD**

Shipping, Handling, and Tax charges are calculated and charged by each supplier. The values shown here are for estimation purposes, budget checking, and workflow approvals.

Subtotal **5,499.68**
Total **5,499.68 USD**

Powered by JAGGAER | Privacy Policy

4120a & 4120b

BOARDROOM ELECTROL®

Concealed-In-The-Ceiling Electric Screen

- Designed specifically for ceiling recessed installation in any conference or boardroom.
- Patented in-the-roller motor mounting system for quiet operation.
- Fully automatic ceiling closure doors conceal screen when not is use.





Optional remote control operation.

Matte White fabric up to and including 10' high will be seamless. Glass Beaded fabric up to and including 8' high will be seamless. Video Spectra® 1.5 fabric up to and including 8' high will be seamless. High Power fabric up to and including 6' high will be seamless.

SQUARE FORMAT

Size H x W in./ft.	Size H x W cm.	Overall Length of Case in.	Overall Length of Case cm.	Matte White	Glass Beaded	Video Spectra® 1.5	High Power
50" x 50"	127x 127	63-1/2"	161	x	x	x	x
60" x 60"	152 x 152	73-1/2"	186	x	x	x	x
70" x 70"	178 x 178	83-1/2"	211	x	x	x	x
84" x 84"	213 x 213	97-1/2"	248	x	x	x	x
6' x 8'	183 x 244	109-1/2"	278	x	x	x	x
8' x 8'	244 x 244	109-1/2"	278	x	x	x	x
7' x 9'	213 x 274	121-1/2"	309	x	x	x	x
9' x 9'	274 x 274	121-1/2"	309	x	x		x
8' x 10'	244 x 305	133-1/2"	339	x	x	x	x
10' x 10'	305 x 305	133-1/2"	339	x	x		x
9' x 12'	274 x 366	157-1/2"	400	x	x		x
12' x 12'	366 x 366	157-1/2"	400	x	x		

VIDEO FORMAT

Viewing Area H x W in.	Viewing Area H x W cm.	Nominal Diagonal in.	Nominal Diagonal cm.	Overall Length of Case in.	Overall Length of Case cm.	Matte White	Glass Beaded	Video Spectra®1.5	High Power
43" x 57"	109 x 145	72"	183	73-1/2"	187	x	x	x	x
50" x 67"	127 x 170	84"	213	83-1/2"	212	x	x	x	x
57" x 77"	145 x 196	96"	244	97-1/2"	248	x	x	x	x
60" x 80"	152 x 203	100"	254	97-1/2"	248	x	x	x	x
69" x 92"	175 x 234	120"	305	109-1/2"	278	x	x	x	x
87" x 116"	221 x 295	150"	381	133-1/2"	339	x	x	x	x
105" x 140"	267 x 356	180"	457	157-1/2"	400	x	x		x
120" x 160"	305 x 406	200"	508	177-1/2"	441	x	x		

HDTV FORMAT

Viewing Area H x W in.	Viewing Area H x W cm.	Nominal Diagonal in.	Nominal Diagonal cm.	Overall Length of Case in.	Overall Length of Case cm.	Matte White	Glass Beaded	Video Spectra®1.5	High Power
45" x 80"	114 x 203	92"	234	97-1/2"	248	x	x	x	x
52" x 92"	132 x 234	106"	269	109-1/2"	278	x	x	x	x
58" x 104"	147 x 264	119"	302	121-1/2"	309	x	x	x	x
65" x 116"	165 x 295	133"	338	133-1/2"	339	x	x	x	x
78" x 139"	198 x 353	159"	404	157-1/2"	400	x	x	x	x

4120a

4120b

Q6FN TV



4K ULTRA HD CONNECTED

PRODUCT HIGHLIGHTS

- Q | Color™
- Q | HDR™
- Q | Style™
- Smart TV with Bixby Voice

SIZE CLASS

82"	75"	65"	55"	49"
82Q6FN	75Q6FN	65Q6FN	55Q6FN	49Q6FN

The eye will savor the 2018 Q6. Welcome to the prestigious QLED lineup that tantalizes your vision with 1 billion+ shades of Q Color™ while Ambient Mode™ alters the screen into a spectacular visual display.

KEY FEATURES

Product Type
- QLED TV

Q Picture™
- Q | Color™
- Q | Contrast™
- Q | HDR™
- 100% Color Volume
- Auto Game Mode
- Q | Engine™
- Motion Rate 240
- Ultra Slim Array

Q Style™
- Clean Cable Solution®
- Wide Viewing Angle
- Ambient Mode™
- 360° Design
- Bezel Color: Eclipse Silver
- Stand Color: Eclipse Silver
- Bezel-free Design

Q Smart™ with Bixby Voice
- Universal Browse
- Connect & Share
- Samsung OneRemote[1]

Connections
- 4 HDMI Connections[2]
- 2 USB Connections
- LAN Port
- 802.11AC built-in Wi-Fi
- Bluetooth®
- RS232 Control Support (EX-Link)
- IP Control Support[3]
- Optical Audio Output Port

Audio
- Dolby® Digital Plus
- 40 Watt 2.1 Channel

Included Accessories
- Samsung OneRemote

Industry Certifications
- CTA 4K Ultra HD Connected

[1]Color may vary by model.
[2]HDMI—CEC (Consumer Electronics Control) facilitates convenient control functions with compatible devices.
[3]Requires third-party control system installation. See www.samsung.com/us/business/custominstall.

SAMSUNG

SEE BACK FOR DETAILS

KEY FEATURES (page 1 of 2)

Q | Picture™

A TV for real-world conditions, even daytime TV looks brilliant in sun-drenched rooms. Over 1 billion color shades appear vibrant and real, thanks to our proprietary Quantum Dots reserved for our flagship QLED TVs.

Q | Color™
Push the boundaries of color with Quantum Dots and a billion+ shades, reserved for our flagship QLED TVs.[4]

Q | Contrast™
Experience dramatic depth from the darkest to brightest scenes.

Q | HDR™
See colors in movies and shows pop, just as the director intended—in stunning high dynamic range.

100% Color Volume
The secret behind color is that it may fade in bright scenes; QLED 100% Color Volume seemingly rejuvenates color in challenging content for a brilliant visual experience.

Auto Game Mode
Get a leg up on the competition—your console automatically optimizes TV settings for an enhanced gaming experience with minimal input lag and ultrafast refresh rates.

Q | Engine™
Heighten breathtaking color and detail with a powerful processor that optimizes your content for 4K clarity, color and HDR.

Motion Rate 240
Enjoy our absolute best moving picture resolution with remarkable refresh rate, processing speed and backlight technology.

Ultra Slim Array
The Ultra Slim Array dynamically fine-tunes the deepness of the blacks, to the brightness of the whites, for a picture with sensational contrast.

HDR Formats Supported
HDR10 (Static MetaData), HDR10+ (Dynamic MetaData), HLG (Hybrid Log Gamma). All Samsung 4K UHD TVs also meet the CTA HDR-Compatible Definition.

Q | Style™

A thoughtful design with a Clean Cable Solution® allows you to focus on a TV without the clutter.

Clean Cable Solution®
Neatly manages cords for a crisp, clean look.

Wide Viewing Angle
You thought the best seats were taken, but you're alright with wide angle viewing.

Ambient Mode™
Part TV, part chameleon. Ambient Mode on your QLED mimics your wall pattern for an astonishing visual effect when you're not watching TV.[5]

360° Design
The sleek, clean design looks attractive from any angle.

Q Smart™ with Bixby Voice

A revolutionary way to help find streaming and live TV shows with a universal guide, OneRemote and voice assistance.

Universal Browse
A revolutionary new way to help find streaming and live TV shows with a universal guide.

Connect & Share
Sync your TV to your compatible smartphone to access and control your content on the big screen.

Samsung OneRemote
OneRemote automatically detects and controls all your connected devices[6] and content.[1]

[4]Samsung QLED is a Quantum Dot-based TV.
[5]Background feature accuracy may vary based on TV location, dependent on wall designs, patterns and/or colors. SmartThings app on a mobile device (Android, iOS) is required for some functionality. App features may be limited at launch; please continue to check for updates.
[6]Compatible devices only.

KEY FEATURES (page 2 of 2)

Connections

HDMI
Enjoy higher-quality audio and video with an HDMI connection that transmits both signals over a single cable. Compatible with next-generation Ultra HD Blu-ray™ players and HDR content decoding. Includes 1 Audio Return Channel (ARC).

Wi-Fi
Enjoy your favorite on-demand content seamlessly through your existing network with built-in Wi-Fi (802.11AC).

Audio

Dolby® Digital Plus
Enjoy the ultimate digital sound quality on all your favorite movies, TV shows and streaming content. Dolby Digital Plus optimizes your entertainment experience with enhanced sound richness and clarity.

Included Accessories

Samsung OneRemote (TM-1850A)

Industry Certifications

4K Ultra HD Connected
All Samsung 2018 4K UHD and QLED televisions comply with the CTA 4K Ultra High-Definition Connected definition requirements. The trade organization known as the Consumer Technology Association (CTA™) is considered an industry authority on engineering standards for consumer electronics in the United States. Visit www.cta.tech for more information.

©2018 Samsung Electronics America, Inc. Samsung is a registered trademark of Samsung Electronics Co., Ltd. Samsung and Samsung SMART TV are both trademarks or registered trademarks of Samsung Electronics Co., Ltd. All other brand, product and service names and logos are marks and/or registered trademarks of their respective owners. Screen images are simulated. Some devices may require internet access. Apps may vary by product model. 4K UHD launch timing may vary by provider. Selection of 4K UHD content subject to individual content provider availability. Only select titles are available in 4K UHD. QLED televisions can produce 100% Color Volume in the DCI-P3 color space, the format for most cinema screen and HDR movies for television.

SAMSUNG

Q6FN TV

MODELS

MODEL: QN82Q6FN
ORDER CODE: QN82Q6FNAFXZA

SCREEN SIZE CLASS: 82"

SCREEN DIAGONAL MEASUREMENT: 81.5"

UPC CODE: 887276260228

COUNTRY OF ORIGIN: Mexico

DIMENSIONS (INCHES W x H x D):
- **TV WITHOUT STAND:** 72 x 41.6 x 2.4
- **TV WITH STAND:** 72 x 45.1 x 15.2
- **SHIPPING:** 79.4 x 48.1 x 11.6
- **STAND FOOTPRINT:** 2.5 x 10.3 x 15.2

WEIGHT (LB):
- **TV WITHOUT STAND:** 98.1
- **TV WITH STAND:** 100.8
- **SHIPPING:** 135.8

VESA SUPPORT: Yes (400mm x 400mm)

ACCESSORIES INCLUDED IN BOX:
- **REMOTE MODEL:** TM-1850A

MODEL: QN75Q6FN
ORDER CODE: QN75Q6FNAFXZA

SCREEN SIZE CLASS: 75"

SCREEN DIAGONAL MEASUREMENT: 74.5"

UPC CODE: 887276260402

COUNTRY OF ORIGIN: Mexico

DIMENSIONS (INCHES W x H x D):
- **TV WITHOUT STAND:** 65.9 x 38 x 2.3
- **TV WITH STAND:** 65.9 x 41.3 x 14.1
- **SHIPPING:** 73.3 x 44.1 x 8.7
- **STAND FOOTPRINT:** 2.5 x 9.2 x 14.1

WEIGHT (LB):
- **TV WITHOUT STAND:** 79.4
- **TV WITH STAND:** 81.1
- **SHIPPING:** 110

VESA SUPPORT: Yes (400mm x 400mm)

ACCESSORIES INCLUDED IN BOX:
- **REMOTE MODEL:** TM-1850A

MODELS

MODEL: QN65Q6FN
ORDER CODE: QN65Q6FNAFXZA

SCREEN SIZE CLASS: 65"

SCREEN DIAGONAL MEASUREMENT: 64.5"

UPC CODE: 887276260396

COUNTRY OF ORIGIN: Mexico

DIMENSIONS (INCHES W x H x D):
- **TV WITHOUT STAND:** 56.9 x 32.8 x 2.2
- **TV WITH STAND:** 56.9 x 35.8 x 11.2
- **SHIPPING:** 62.5 x 38 x 6.6
- **STAND FOOTPRINT:** 2.2 x 7.9 x 11.2

WEIGHT (LB):
- **TV WITHOUT STAND:** 53.4
- **TV WITH STAND:** 54.7
- **SHIPPING:** 70.5

VESA SUPPORT: Yes (400mm x 400mm)

ACCESSORIES INCLUDED IN BOX:
- **REMOTE MODEL:** TM-1850A

MODEL: QN55Q6FN
ORDER CODE: QN55Q6FNAFXZA

SCREEN SIZE CLASS: 55"

SCREEN DIAGONAL MEASUREMENT: 54.6"

UPC CODE: 887276260211

COUNTRY OF ORIGIN: Mexico

DIMENSIONS (INCHES W x H x D):
- **TV WITHOUT STAND:** 48.3 x 28 x 2.2
- **TV WITH STAND:** 48.3 x 30.7 x 9.8
- **SHIPPING:** 53.3 x 33.4 x 6.2
- **STAND FOOTPRINT:** 2.1 x 7.3 x 9.8

WEIGHT (LB):
- **TV WITHOUT STAND:** 37.9
- **TV WITH STAND:** 39
- **SHIPPING:** 51.4

VESA SUPPORT: Yes (200mm x 200mm)

ACCESSORIES INCLUDED IN BOX:
- **REMOTE MODEL:** TM-1850A

MODELS

MODEL: QN49Q6FN
ORDER CODE: QN49Q6FNAFXZA

SCREEN SIZE CLASS: 49"

SCREEN DIAGONAL MEASUREMENT: 48.5"

UPC CODE: 887276269863

COUNTRY OF ORIGIN: Mexico

DIMENSIONS (INCHES W x H x D):
- **TV WITHOUT STAND:** 43 x 25 x 2.2
- **TV WITH STAND:** 43 x 27.7 x 9.8
- **SHIPPING:** T.B.D.
- **STAND FOOTPRINT:** 2.1 x 7.3 x 9.8

WEIGHT (LB):
- **TV WITHOUT STAND:** T.B.D.
- **TV WITH STAND:** T.B.D.
- **SHIPPING:** T.B.D.

VESA SUPPORT: Yes (200mm x 200mm)

ACCESSORIES INCLUDED IN BOX:
- **REMOTE MODEL:** TM-1850A

NU7100 TV





PRODUCT HIGHLIGHTS

- PurColor™
- Motion Rate 120
- HDR
- Smart TV

SIZE CLASS

75"	65"	58"	55"	50"	43"	40"
75NU7	65NU7	58NU7	55NU7	50NU7	43NU7	40NU7

4K ULTRA HD CONNECTED

Step up from Full HD with the clarity of the NU7100. Get 4X the resolution of Full HD, plus non-4K TV content is upscaled to 4K via a powerful UHD Engine™ This TV is a clear upgrade for your content.

KEY FEATURES

Product Type
- Ultra HDTV

4K UHD Picture
- PurColor™
- Essential Contrast
- HDR
- 4K UHD
- Game Mode
- UHD Engine™
- Motion Rate 120
- UHD Dimming
- Contrast Enhancer

Design
- Clean Cable Solution®[1]
- Slim Design
- Bezel Color: Charcoal Black
- Stand Color: Dark Gray

Smart TV
- Universal Browse
- Connect & Share

Connections
- 3 HDMI Connections[2]
- 2 USB Connections
- 1 Component Video Input (shared)
- 1 Composite Video Input (shared)
- 802.11n built-in Wi-Fi
- RS232 Control (requires adaptor)[3]
- Optical Audio Output Port

Audio
- Dolby® Digital Plus
- 20 Watt 2 Channel

Included Accessories
- Standard Remote

Industry Certifications
- CTA 4K Ultra HD Connected

[1]Clean Cable Solution® not available on the 40" & 43" NU7100 and NU7200 Series TVs.
[2]HDMI–CEC (Consumer Electronics Control) facilitates convenient control functions with compatible devices.
[3]Serial control requires USB adaptor provided by participating dealers and distributors.

SAMSUNG

SEE BACK FOR DETAILS

NU7100 TV

KEY FEATURES (page 1 of 2)

4K UHD Picture

A quest for clarity beyond the standard was researched and developed, creating an engine that drives breathtaking resolution 4X more than Full HD.

PurColor™
Enjoy millions of shades of color, fine-tuned to create an incredibly vibrant picture.

Essential Contrast
Discern lifelike details in the brightest and dimmest scenes.

HDR
View stunning high-dynamic-range content with a TV designed to support HDR10+.

4K UHD
See what you've been missing on a crisp, clear picture that's 4X the resolution of Full HD.

Game Mode
Get a leg up on the competition, thanks to an optimized gaming experience with minimal input lag.

UHD Engine™
A powerful processor optimizes your content for 4K picture quality.

Motion Rate 120
Smooth action on fast-moving content.

UHD Dimming
Optimizes color, contrast and image detail for greater enjoyment of action movies and sports.

Contrast Enhancer
Experience a greater sense of depth with optimized contrast across all areas of the screen.

HDR Formats Supported
HDR10 (Static MetaData), HDR10+ (Dynamic MetaData), HLG (Hybrid Log Gamma). All Samsung 4K UHD TVs also meet the CTA HDR-Compatible Definition.

Design

From finish to function, a thoughtful design that amazes.

Clean Cable Solution®
Neatly manages cords for a crisp, clean look.

Slim Design
An elegant, slim design for a modern look you'll admire.

Smart TV

Access your streaming services all in one place using the Samsung Remote Control.

Universal Browse
An easy way to find streaming content and live TV shows with a single universal guide.

Connect & Share
Sync your TV to your compatible smartphone to access and control your content on the big screen.[4]

Samsung Remote Control
Adjusts TV functions and navigates Samsung Smart TV menus.[5]

[4]Some features vary. Bluetooth not available on NU7300 or NU7100 TVs.
[5]Compatible devices only. All devices must be on the same network, and internet connection is required.

KEY FEATURES (page 2 of 2)

Connections

HDMI
Enjoy higher-quality audio and video with an HDMI connection that transmits both signals over a single cable. Compatible with next generation Ultra HD Blu-ray™ players and HDR content decoding. Includes 1 Audio Return Channel (ARC).

Wi-Fi
Enjoy your favorite on-demand content seamlessly through your existing network with built-in Wi-Fi (802.11n).

Audio

Dolby® Digital Plus
Enjoy the ultimate digital sound quality on all your favorite movies, TV shows and streaming content. Dolby Digital Plus optimizes your entertainment experience with enhanced sound richness and clarity.

Included Accessories

Standard Remote (TM-1240A)

Industry Certifications

4K Ultra HD Connected
All Samsung 2018 4K UHD and QLED televisions comply with the CTA 4K Ultra High-Definition Connected definition requirements. The trade organization known as the Consumer Technology Association (CTA™) is considered an industry authority on engineering standards for consumer electronics in the United States. Visit www.cta.tech for more information.

©2018 Samsung Electronics America, Inc. Samsung is a registered trademark of Samsung Electronics Co., Ltd. Samsung and Samsung SMART TV are both trademarks or registered trademarks of Samsung Electronics Co., Ltd. All other brand, product and service names and logos are marks and/or registered trademarks of their respective owners. Screen images are simulated. Some devices may require internet access. Apps may vary by product model. 4K UHD launch timing may vary by provider. Selection of 4K UHD content subject to individual content provider availability. Only select titles are available in 4K UHD.

SAMSUNG

NU7100 TV

MODELS

MODEL: UN75NU7100
ORDER CODE: UN75NU7100FXZA

SCREEN SIZE CLASS: 75"

SCREEN DIAGONAL MEASUREMENT: 74.5"

UPC CODE: 887276257549

COUNTRY OF ORIGIN: Mexico

DIMENSIONS (INCHES W x H x D):
- **TV WITHOUT STAND:** 66.3 x 38 x 2.4
- **TV WITH STAND:** 66.3 x 41.6 x 13.7
- **SHIPPING:** 73.7 x 44.5 x 9.2
- **STAND FOOTPRINT:** 2.1 x 8.4 x 13.7

WEIGHT (LB):
- **TV WITHOUT STAND:** 81.6
- **TV WITH STAND:** 82.7
- **SHIPPING:** 111.6

VESA SUPPORT: Yes (400mm x 400mm)

ACCESSORIES INCLUDED IN BOX:
- **REMOTE MODEL:** TM-1240A

MODEL: UN65NU7100
ORDER CODE: UN65NU7100FXZA

SCREEN SIZE CLASS: 65"

SCREEN DIAGONAL MEASUREMENT: 64.5"

UPC CODE: 887276257532

COUNTRY OF ORIGIN: Mexico

DIMENSIONS (INCHES W x H x D):
- **TV WITHOUT STAND:** 57.4 x 33 x 2.4
- **TV WITH STAND:** 57.4 x 36.1 x 12.3
- **SHIPPING:** 63 x 38.2 x 7
- **STAND FOOTPRINT:** 1.9 x 7.8 x 12.3

WEIGHT (LB):
- **TV WITHOUT STAND:** 55.1
- **TV WITH STAND:** 56.2
- **SHIPPING:** 74.3

VESA SUPPORT: Yes (400mm x 400mm)

ACCESSORIES INCLUDED IN BOX:
- **REMOTE MODEL:** TM-1240A

NU7100 TV

MODELS

MODEL: UN58NU7100
ORDER CODE: UN58NU7100FXZA

SCREEN SIZE CLASS: 58"

SCREEN DIAGONAL MEASUREMENT: 57.5"

UPC CODE: 887276268729

COUNTRY OF ORIGIN: Mexico

DIMENSIONS (INCHES W x H x D):
- **TV WITHOUT STAND:** 51.2 x 29.8 x 2.4
- **TV WITH STAND:** 51.2 x 32.9 x 10.3
- **SHIPPING:** 56.9 x 35 x 7.3
- **STAND FOOTPRINT:** 1.7 x 7.8 x 10.3

WEIGHT (LB):
- **TV WITHOUT STAND:** 44.5
- **TV WITH STAND:** 45.2
- **SHIPPING:** 75.4

VESA SUPPORT: Yes (400mm x 400mm)

ACCESSORIES INCLUDED IN BOX:
- **REMOTE MODEL:** TM-1240A

MODEL: UN55NU7100
ORDER CODE: UN55NU7100FXZA

SCREEN SIZE CLASS: 55"

SCREEN DIAGONAL MEASUREMENT: 54.6"

UPC CODE: 887276257525

COUNTRY OF ORIGIN: Mexico

DIMENSIONS (INCHES W x H x D):
- **TV WITHOUT STAND:** 48.4 x 28.1 x 2.3
- **TV WITH STAND:** 48.8 x 31.2 x 10.3
- **SHIPPING:** 53.8 x 33.5 x 6.2
- **STAND FOOTPRINT:** 1.7 x 7.8 x 10.3

WEIGHT (LB):
- **TV WITHOUT STAND:** 38.1
- **TV WITH STAND:** 39
- **SHIPPING:** 51.6

VESA SUPPORT: Yes (200mm x 200mm)

ACCESSORIES INCLUDED IN BOX:
- **REMOTE MODEL:** TM-1240A

NU7100 TV

MODELS

MODEL: UN50NU7100
ORDER CODE: UN50NU7100FXZA

SCREEN SIZE CLASS: 50"

SCREEN DIAGONAL MEASUREMENT: 49.5"

UPC CODE: 887276257518

COUNTRY OF ORIGIN: Mexico

DIMENSIONS (INCHES W x H x D):
- **TV WITHOUT STAND:** 44.3 x 25.6 x 2.4
- **TV WITH STAND:** 44.3 x 28.7 x 10.3
- **SHIPPING:** 50.1 x 31.1 x 6.1
- **STAND FOOTPRINT:** 1.7 x 7.8 x 10.3

WEIGHT (LB):
- **TV WITHOUT STAND:** 30
- **TV WITH STAND:** 30.6
- **SHIPPING:** 42.1

VESA SUPPORT: Yes (200mm x 200mm)

ACCESSORIES INCLUDED IN BOX:
- **REMOTE MODEL:** TM-1240A

MODEL: UN43NU7100
ORDER CODE: UN43NU7100FXZA

SCREEN SIZE CLASS: 43"

SCREEN DIAGONAL MEASUREMENT: 42.5"

UPC CODE: 887276257501

COUNTRY OF ORIGIN: Mexico

DIMENSIONS (INCHES W x H x D):
- **TV WITHOUT STAND:** 38.2 x 22.2 x 2.3
- **TV WITH STAND:** 38.2 x 25.1 x 8.2
- **SHIPPING:** 43.2 x 26.7 x 5.9
- **STAND FOOTPRINT:** 1.4 x 6.6 x 8.2

WEIGHT (LB):
- **TV WITHOUT STAND:** 21.2
- **TV WITH STAND:** 21.6
- **SHIPPING:** 30

VESA SUPPORT: Yes (200mm x 200mm)

ACCESSORIES INCLUDED IN BOX:
- **REMOTE MODEL:** TM-1240A

NU7100 TV

MODELS

MODEL: UN40NU7100
ORDER CODE: UN40NU7100FXZA

SCREEN SIZE CLASS: 40"

SCREEN DIAGONAL MEASUREMENT: 39.5"

UPC CODE: 887276257495

COUNTRY OF ORIGIN: Mexico

DIMENSIONS (INCHES W x H x D):
- **TV WITHOUT STAND:** 36 x 20.9 x 2.3
- **TV WITH STAND:** 36 x 23.8 x 8.2
- **SHIPPING:** 40 x 24.1 x 5.5
- **STAND FOOTPRINT:** 1.4 x 6.6 x 8.2

WEIGHT (LB):
- **TV WITHOUT STAND:** 18.7
- **TV WITH STAND:** 19.4
- **SHIPPING:** 24.3

VESA SUPPORT: Yes (200mm x 200mm)

ACCESSORIES INCLUDED IN BOX:
- **REMOTE MODEL:** TM-1240A

NU7100 TV





PRODUCT HIGHLIGHTS

- PurColor™
- Motion Rate 120
- HDR
- Smart TV

SIZE CLASS

75"	65"	58"	55"	50"	43"	40"
75NU7	65NU7	58NU7	55NU7	50NU7	43NU7	40NU7

4K ULTRA HD CONNECTED

Step up from Full HD with the clarity of the NU7100. Get 4X the resolution of Full HD, plus non-4K TV content is upscaled to 4K via a powerful UHD Engine™ This TV is a clear upgrade for your content.

KEY FEATURES

Product Type
- Ultra HDTV

4K UHD Picture
- PurColor™
- Essential Contrast
- HDR
- 4K UHD
- Game Mode
- UHD Engine™
- Motion Rate 120
- UHD Dimming
- Contrast Enhancer

Design
- Clean Cable Solution®[1]
- Slim Design
- Bezel Color: Charcoal Black
- Stand Color: Dark Gray

Smart TV
- Universal Browse
- Connect & Share

Connections
- 3 HDMI Connections[2]
- 2 USB Connections
- 1 Component Video Input (shared)
- 1 Composite Video Input (shared)
- 802.11n built-in Wi-Fi
- RS232 Control (requires adaptor)[3]
- Optical Audio Output Port

Audio
- Dolby® Digital Plus
- 20 Watt 2 Channel

Included Accessories
- Standard Remote

Industry Certifications
- CTA 4K Ultra HD Connected

[1]Clean Cable Solution® not available on the 40" & 43" NU7100 and NU7200 Series TVs.
[2]HDMI–CEC (Consumer Electronics Control) facilitates convenient control functions with compatible devices.
[3]Serial control requires USB adaptor provided by participating dealers and distributors.

SAMSUNG

SEE BACK FOR DETAILS

NU7100 TV

KEY FEATURES (page 1 of 2)

4K UHD Picture

A quest for clarity beyond the standard was researched and developed, creating an engine that drives breathtaking resolution 4X more than Full HD.

PurColor™
Enjoy millions of shades of color, fine-tuned to create an incredibly vibrant picture.

Essential Contrast
Discern lifelike details in the brightest and dimmest scenes.

HDR
View stunning high-dynamic-range content with a TV designed to support HDR10+.

4K UHD
See what you've been missing on a crisp, clear picture that's 4X the resolution of Full HD.

Game Mode
Get a leg up on the competition, thanks to an optimized gaming experience with minimal input lag.

UHD Engine™
A powerful processor optimizes your content for 4K picture quality.

Motion Rate 120
Smooth action on fast-moving content.

UHD Dimming
Optimizes color, contrast and image detail for greater enjoyment of action movies and sports.

Contrast Enhancer
Experience a greater sense of depth with optimized contrast across all areas of the screen.

HDR Formats Supported
HDR10 (Static MetaData), HDR10+ (Dynamic MetaData), HLG (Hybrid Log Gamma). All Samsung 4K UHD TVs also meet the CTA HDR-Compatible Definition.

Design

From finish to function, a thoughtful design that amazes.

Clean Cable Solution®
Neatly manages cords for a crisp, clean look.

Slim Design
An elegant, slim design for a modern look you'll admire.

Smart TV

Access your streaming services all in one place using the Samsung Remote Control.

Universal Browse
An easy way to find streaming content and live TV shows with a single universal guide.

Connect & Share
Sync your TV to your compatible smartphone to access and control your content on the big screen.[4]

Samsung Remote Control
Adjusts TV functions and navigates Samsung Smart TV menus.[5]

[4]Some features vary. Bluetooth not available on NU7300 or NU7100 TVs.
[5]Compatible devices only. All devices must be on the same network, and internet connection is required.

KEY FEATURES (page 2 of 2)

Connections

HDMI
Enjoy higher-quality audio and video with an HDMI connection that transmits both signals over a single cable. Compatible with next generation Ultra HD Blu-ray™ players and HDR content decoding. Includes 1 Audio Return Channel (ARC).

Wi-Fi
Enjoy your favorite on-demand content seamlessly through your existing network with built-in Wi-Fi (802.11n).

Audio

Dolby® Digital Plus
Enjoy the ultimate digital sound quality on all your favorite movies, TV shows and streaming content. Dolby Digital Plus optimizes your entertainment experience with enhanced sound richness and clarity.

Included Accessories

Standard Remote (TM-1240A)

Industry Certifications

4K Ultra HD Connected
All Samsung 2018 4K UHD and QLED televisions comply with the CTA 4K Ultra High-Definition Connected definition requirements. The trade organization known as the Consumer Technology Association (CTA™) is considered an industry authority on engineering standards for consumer electronics in the United States. Visit www.cta.tech for more information.

©2018 Samsung Electronics America, Inc. Samsung is a registered trademark of Samsung Electronics Co., Ltd. Samsung and Samsung SMART TV are both trademarks or registered trademarks of Samsung Electronics Co., Ltd. All other brand, product and service names and logos are marks and/or registered trademarks of their respective owners. Screen images are simulated. Some devices may require internet access. Apps may vary by product model. 4K UHD launch timing may vary by provider. Selection of 4K UHD content subject to individual content provider availability. Only select titles are available in 4K UHD.

SAMSUNG

NU7100 TV

MODELS

MODEL: UN75NU7100
ORDER CODE: UN75NU7100FXZA

SCREEN SIZE CLASS: 75"

SCREEN DIAGONAL MEASUREMENT: 74.5"

UPC CODE: 887276257549

COUNTRY OF ORIGIN: Mexico

DIMENSIONS (INCHES W x H x D):
- **TV WITHOUT STAND:** 66.3 x 38 x 2.4
- **TV WITH STAND:** 66.3 x 41.6 x 13.7
- **SHIPPING:** 73.7 x 44.5 x 9.2
- **STAND FOOTPRINT:** 2.1 x 8.4 x 13.7

WEIGHT (LB):
- **TV WITHOUT STAND:** 81.6
- **TV WITH STAND:** 82.7
- **SHIPPING:** 111.6

VESA SUPPORT: Yes (400mm x 400mm)

ACCESSORIES INCLUDED IN BOX:
- **REMOTE MODEL:** TM-1240A

MODEL: UN65NU7100
ORDER CODE: UN65NU7100FXZA

SCREEN SIZE CLASS: 65"

SCREEN DIAGONAL MEASUREMENT: 64.5"

UPC CODE: 887276257532

COUNTRY OF ORIGIN: Mexico

DIMENSIONS (INCHES W x H x D):
- **TV WITHOUT STAND:** 57.4 x 33 x 2.4
- **TV WITH STAND:** 57.4 x 36.1 x 12.3
- **SHIPPING:** 63 x 38.2 x 7
- **STAND FOOTPRINT:** 1.9 x 7.8 x 12.3

WEIGHT (LB):
- **TV WITHOUT STAND:** 55.1
- **TV WITH STAND:** 56.2
- **SHIPPING:** 74.3

VESA SUPPORT: Yes (400mm x 400mm)

ACCESSORIES INCLUDED IN BOX:
- **REMOTE MODEL:** TM-1240A

NU7100 TV

MODELS

MODEL: UN58NU7100
ORDER CODE: UN58NU7100FXZA

SCREEN SIZE CLASS: 58"

SCREEN DIAGONAL MEASUREMENT: 57.5"

UPC CODE: 887276268729

COUNTRY OF ORIGIN: Mexico

DIMENSIONS (INCHES W x H x D):
- **TV WITHOUT STAND:** 51.2 x 29.8 x 2.4
- **TV WITH STAND:** 51.2 x 32.9 x 10.3
- **SHIPPING:** 56.9 x 35 x 7.3
- **STAND FOOTPRINT:** 1.7 x 7.8 x 10.3

WEIGHT (LB):
- **TV WITHOUT STAND:** 44.5
- **TV WITH STAND:** 45.2
- **SHIPPING:** 75.4

VESA SUPPORT: Yes (400mm x 400mm)

ACCESSORIES INCLUDED IN BOX:
- **REMOTE MODEL:** TM-1240A

MODEL: UN55NU7100
ORDER CODE: UN55NU7100FXZA

SCREEN SIZE CLASS: 55"

SCREEN DIAGONAL MEASUREMENT: 54.6"

UPC CODE: 887276257525

COUNTRY OF ORIGIN: Mexico

DIMENSIONS (INCHES W x H x D):
- **TV WITHOUT STAND:** 48.4 x 28.1 x 2.3
- **TV WITH STAND:** 48.8 x 31.2 x 10.3
- **SHIPPING:** 53.8 x 33.5 x 6.2
- **STAND FOOTPRINT:** 1.7 x 7.8 x 10.3

WEIGHT (LB):
- **TV WITHOUT STAND:** 38.1
- **TV WITH STAND:** 39
- **SHIPPING:** 51.6

VESA SUPPORT: Yes (200mm x 200mm)

ACCESSORIES INCLUDED IN BOX:
- **REMOTE MODEL:** TM-1240A

NU7100 TV

MODELS

MODEL: UN50NU7100
ORDER CODE: UN50NU7100FXZA

SCREEN SIZE CLASS: 50"

SCREEN DIAGONAL MEASUREMENT: 49.5"

UPC CODE: 887276257518

COUNTRY OF ORIGIN: Mexico

DIMENSIONS (INCHES W x H x D):
- **TV WITHOUT STAND:** 44.3 x 25.6 x 2.4
- **TV WITH STAND:** 44.3 x 28.7 x 10.3
- **SHIPPING:** 50.1 x 31.1 x 6.1
- **STAND FOOTPRINT:** 1.7 x 7.8 x 10.3

WEIGHT (LB):
- **TV WITHOUT STAND:** 30
- **TV WITH STAND:** 30.6
- **SHIPPING:** 42.1

VESA SUPPORT: Yes (200mm x 200mm)

ACCESSORIES INCLUDED IN BOX:
- **REMOTE MODEL:** TM-1240A

MODEL: UN43NU7100
ORDER CODE: UN43NU7100FXZA

SCREEN SIZE CLASS: 43"

SCREEN DIAGONAL MEASUREMENT: 42.5"

UPC CODE: 887276257501

COUNTRY OF ORIGIN: Mexico

DIMENSIONS (INCHES W x H x D):
- **TV WITHOUT STAND:** 38.2 x 22.2 x 2.3
- **TV WITH STAND:** 38.2 x 25.1 x 8.2
- **SHIPPING:** 43.2 x 26.7 x 5.9
- **STAND FOOTPRINT:** 1.4 x 6.6 x 8.2

WEIGHT (LB):
- **TV WITHOUT STAND:** 21.2
- **TV WITH STAND:** 21.6
- **SHIPPING:** 30

VESA SUPPORT: Yes (200mm x 200mm)

ACCESSORIES INCLUDED IN BOX:
- **REMOTE MODEL:** TM-1240A

NU7100 TV

MODELS

MODEL: UN40NU7100
ORDER CODE: UN40NU7100FXZA

SCREEN SIZE CLASS: 40"

SCREEN DIAGONAL MEASUREMENT: 39.5"

UPC CODE: 887276257495

COUNTRY OF ORIGIN: Mexico

DIMENSIONS (INCHES W x H x D):
- **TV WITHOUT STAND:** 36 x 20.9 x 2.3
- **TV WITH STAND:** 36 x 23.8 x 8.2
- **SHIPPING:** 40 x 24.1 x 5.5
- **STAND FOOTPRINT:** 1.4 x 6.6 x 8.2

WEIGHT (LB):
- **TV WITHOUT STAND:** 18.7
- **TV WITH STAND:** 19.4
- **SHIPPING:** 24.3

VESA SUPPORT: Yes (200mm x 200mm)

ACCESSORIES INCLUDED IN BOX:
- **REMOTE MODEL:** TM-1240A

4136



FWD55X800E

55" diag 4K/UHD Pro Bravia Display

$1,459.99

U.S.List Price

UPC: 027242286047

Overview

4k resolution 55" display Featuring advanced image processing for exceptional picture quality. IP and serial control and HTML5 capabilty making this an ideal professional display

Highlights

* 4K 55"display
* Advanced image processing for exceptional picture quality
* WiFI connectivity
* RS232C
* Edge lit LED

Specifications

Contol Inputs Specifications	Detail
Network	RJ 45
Digital Inputs Specifications	**Detail**
HDMI	4
Display Specifications	**Detail**
Backlight Technology	Edge Lit LED
Display Technology	LCD
Image Aspect Ratio	16 by 9
Native Aspect Ratio	16 by 9
Resolution	3840 by 2160
Screen Size	55" (54.6")
Viewing Angle	178(89/89) degree
General Specifications	**Detail**
Dimensions (W x H x D)	48 5/8 x 28 1/4 x 2 1/4(9/16) inch
Wall/Arm Mount	VESA mount 300mm by 200mm
Weight	38.8 lb
Power Requirements Specifications	**Detail**

Power Consumption	149W
Power Requirements	120V

Accessories

Supplied Accessories

Model:	Description:	U.S.List Price
	Power Cord	Pricing available upon request
	Voice Activated Remote	Pricing available upon request
	Operation manual	Pricing available upon request

This PDF was printed at sony.com/professional. Copyright 2011, Sony Electronics Inc All Rights Reserved.

SLIM LED

F6400 Slim LED TV



MODELS

75" CLASS UN75F6400

65" CLASS UN65F6400

60" CLASS UN60F6400

55" CLASS UN55F6400

50" CLASS UN50F6400

46" CLASS UN46F6400

40" CLASS UN40F6400



Smart Touch Remote Control

PRODUCT HIGHLIGHTS

Smart TV 2.0 with S-Recommendation

Dual Core Processor

Samsung Active 3D Full HD

Micro Dimming

KEY FEATURES

PICTURE QUALITY
- Full HD 1080p
- Micro Dimming
- Clear Motion Rate 480

SMART TV 2.0
- Dual Core Processor
- Smart Hub
- Full Web Browser
- S-Recommendation

SMART INTERACTION 2.0
- Motion Control Ready (limited gesture)*
- Voice Control

SMART CONNECTIVITY
- AllShare™
- Samsung Smart View (Clone View Only)

2D AND 3D IN FULL HD

SLIM DESIGN

CONNECTIONS
- 4 HDMI® Connections
- 3 USB Connections
- Wi-Fi® Built-in
- 1 Component in
- 1 Shared Composite in (AV)

AUDIO
- Dolby® Digital Plus, Dolby® Pulse
- DTS Premium Sound | 5.1™ decoding with DTS Studio Sound™processing

INCLUDES
- Smart Touch Remote Control
- 2 pairs of 3D Active Glasses (SSG-5100GB)

*Requires Skype™ Camera (sold separately)

F6400 Slim LED TV

PICTURE QUALITY

Full HD 1080p:
The realistic detail of Full HD images invites you to enjoy a viewing experience that redefines reality.

Micro Dimming:
Advanced picture contrast technology controls and enhances LED screen brightness, for even whiter whites and deeper blacks.

Clear Motion Rate 480:
A Clear Motion Rate of 480 is a remarkable level of motion-clarity. TVs with this CMR can display action-packed movement with in-depth sharpness, clarity and contrast. Clear Motion Rate was developed to accurately measure how well an LCD or LED TV can depict fast-moving images. Previously, motion-clarity was calculated by the frame refresh rate alone. But CMR offer a more complete measure by calculating 3 factors: frame refresh rate, image processor speed and backlight technology.

SMART TV 2.0:
The Samsung Smart TV finds the movies and TV shows you like – and more. Navigate within the 5 Smart Hub content panels. Easily discover movies, shows, and social posts with less searching and more watching.

Dual Core Processor:
Makes multitasking fast. Browse the web faster and quickly download Apps with this feature.

Smart Hub:
Our new interface organizes your entertainment and content into 5 convenient panels: On TV, Movies and TV Shows, Social, Apps, and a panel for your Photos, Videos and Music.

Full Web Browser:
All the benefits of Full Web Browsing, right on your TV. From social sites like Facebook® and Twitter® to news, weather, entertainment, blogs and more. Discover even more content possibilities with your Smart TV.

S-Recommendation:
Discover what you want to watch without surfing channels just by asking your TV. It will respond to your voice and find a selection of customized content options based on your preferences. Ask the TV for recommendations while you're watching TV, for example "what football games are on?" Or visit the full S-Recommendation hub to find new things to watch.

SMART INTERACTION 2.0:
Speaking into the built-in microphone on the Smart Touch Remote Control along with hand gestures* all control your TV in new and unexpected ways. Use S-Recommendation with voice interaction to ask your TV to find things to watch and get program suggestions.

2D AND 3D IN FULL HD:
Experience vivid, lifelike detail and clarity in both 2D and immersing 3D.

SMART CONNECTIVITY

AllShare™:
Samsung AllShare Play lets you and your family seamlessly share your content across your DLNA-connected Samsung devices, without the need for a network, cables or a connecting device.

Samsung Smart View (Clone View Only):
Stream content playing on your TV straight to your mobile device so you never miss a second of the action.

CONNECTIONS

HDMI®:
High-quality single-cable digital audio/video interface for connecting the TV to a digital cable box, satellite box, DVD and Blu-ray Disc® Player, PC computers, PC portable devices, new-generation tablets and devices featuring the HDMI® output. CEC capability permits the control of the TV and component from one remote control handset.

USB:
Connects a variety of computer, audio and video devices to the TV. USB movie capability allows the streaming of video from storage devices, cameras, camcorders and USB drives.

Wi-Fi Built-in:
No additional equipment is needed to connect with an existing wireless router in your home network and start accessing Samsung Apps or other Smart TV features.

Component in:
Analog video connection transmits HD RGB video using three RCA connections.

*Requires Skype™ Camera (sold separately)

SAMSUNG

F6400 Slim LED TV

Shared Composite in (AV):
Analog video connection transmits video using one RCA connection.

AUDIO

Dolby® Digital Plus / Dolby® Pulse:
Optimizes the TV sound quality when viewing and listening to Internet movies, Internet music and other content played back from wired or wireless mobile phones, PCs and tablet devices.

DTS Premium Sound | 5.1™ decoding with DTS Studio Sound™ processing:
Delivers immersive 5.1 surround sound from any DTS-encoded content and converts any two-channel audio content into a 5.1 DTS surround sound track for discrete surround sound playback. Experience surround sound with maximum bass response, dialog clarity and consistent volume levels from all your content, including Blu-ray™ movies, TV programming, streaming and games.

ACCESSORIES INCLUDED

Smart Touch Remote Control:
Enjoy all the benefits of a Universal Remote with the Smart Touch Remote Control. Use it to control multiple devices connected to your Smart TV, including the set top box, Blu-ray Disc ™ Player and Home Entertainment System. The innovative touch pad allows for quick and intuitive navigation, while the built-in microphone provides an alternative way to control your Smart TV with your voice.

3D Active Glasses:
When combined with Samsung 3D entertainment, 3D Active Glasses bring viewing to vivid life. Samsung's newest 3D Active Glasses offer even greater comfort over hours of viewing.

WARRANTY

1-year parts and 1-year labor warranty (90-days parts and labor for commercial use) with in-home service, backed by Samsung toll-free support.

Appearance and performance of products may vary. Some features may not be available in all areas. The guide is provided for dealer information purposes only. All information included herein is subject to change without notice. Samsung is not responsible for any direct or indirect damages, arising from or related to use of or reliance on the content.

©2013 Samsung Electronics America, Inc. Samsung is a trademark or registered trademark of Samsung Electronics Co., Ltd. Blu-ray Disc® and Blu-ray™ are trademarks of the Blu-ray Disc® Association. All other brand, product, service names and logos are marks and/or registered trademarks of their respective owners. Screen images are simulated. Some devices may require Internet access. Apps may vary by product model.

All other product and brand names are trademarks or registered trademarks of their respective owners.

Screen images are simulated.

F6400 Slim LED TV

MODELS
75" CLASS UN75F6400 – UPC 887276023397
Order code: UN75F6400AFXZA

65" CLASS UN65F6400 – UPC 887276023328
Order code: UN65F6400AFXZA
DIMENSIONS (WxHxD)
TV without stand: 57.9" x 33.4" x 2.0"
TV with stand: 57.9" x 36.8" x 14.8"
Package: 73.1" x 38.7" x 9.3"
WEIGHT
TV without stand: 59.7 lbs.
TV with stand: 65.7 lbs.
Package: 82.2 lbs.

60" CLASS UN60F6400 – UPC 887276023311
Order code: UN60F6400AFXZA
DIMENSIONS (WxHxD)
TV without stand: 54.0" x 31.2" x 1.9"
TV with stand: 54.0" x 34.7" x 14.8"
Package: TBD
WEIGHT
TV without stand: 50.3 lbs.
TV with stand: 56.2 lbs.
Package: 69.7 lbs.

55" CLASS UN55F6400 – UPC 887276020532
Order code: UN55F6400AFXZA
DIMENSIONS (WxHxD)
TV without stand: 49.2" x 28.5" x 1.9"
TV with stand: 49.2" x 31.8" x 12.1"
Package: 61.2" x 32.3" x 6.7"
WEIGHT
TV without stand: 37.3 lbs.
TV with stand: 40.8 lbs.
Package: 52.2 lbs.

50" CLASS UN50F6400 – UPC 887276023304
Order code: UN50F6400AFXZA
DIMENSIONS (WxHxD)
TV without stand: 44.7" x 26.0" x 1.9"
TV with stand: 44.7" x 29.3" x 12.1"
Package: 56.2" x 30.4" x 6.4"
WEIGHT
TV without stand: 30.6 lbs.
TV with stand: 34.2 lbs.
Package: 43.7 lbs.

46" CLASS UN46F6400 – UPC 887276020525
Order code: UN46F6400AFXZA
DIMENSIONS (WxHxD)
TV without stand: 41.7" x 24.3" x 2.0"
TV with stand: 41.7" x 27.7" x 12.1"
Package: 52.9" x 28.3" x 6.2"
WEIGHT
TV without stand: 25.4 lbs.
TV with stand: 28.9 lbs.
Package: 37.5 lbs.

40" CLASS UN40F6400 – UPC 887276020518
Order code: UN40F6400AFXZA
DIMENSIONS (WxHxD)
TV without stand: 36.5" x 21.4" x 2.0"
TV with stand: 36.5" x 24.3" x 10.4"
Package: 45.5" x 24.3" x 5.8"
WEIGHT
TV without stand: 19.4 lbs.
TV with stand: 21.6 lbs.
Package: 26.9 lbs.



PRODUCT HIGHLIGHTS

LED TV

- Smart TV with Smart Content
- WiFi built-in
- LED picture quality

Entertainment is taken to new HD heights.

You'll never miss a moment with this 32" LED Smart HDTV. Smart Content includes new ways to explore and locate your favorite shows, movies games and more. A Full Web Browser with Wifi built-in and innovative apps made for TV, along with Signature Services, enhances your enjoyment. AllShare™ Play allows you to stream content from other devices and enjoy it on the big screen. The Wide Color Enhancer Plus provides vibrant natural-looking images and it's all in a sleek Ultra Slim Design.

UN32EH5300

32" Class (31.5" Diagonal) LED HDTV with 1080p Resolution

FEATURES

- Smart TV
- Smart Content with Signature Services
  - Family Story
  - Fitness
  - Kids Story
- Apps built for TV
- Web Browser & Search All
- Smart Hub
- WiFi built-in
- AllShare™ Play
- ConnectShare™ Movie

PICTURE QUALITY

- Clear Motion Rate 120
- Wide Color Enhancer Plus

AUDIO

- 10W x 2
- Dolby® Digital Plus/Dolby® Pulse
- SRS TheaterSound HD™

CONNECTIONS

- HDMI®: 3
- USB: 2
- Ethernet: 1
- Component in: 1
- Digital audio output: 1 optical

NET DIMENSIONS (WxHxD)

TV without stand: 29.1" x 17.5" x 3.7"
TV with stand: 29.1" x 19.6" x 7.6"

UPC

036725236929

LED TV SERIES 5

UN32EH5300 32" Class (31.5" Diagonal) LED HDTV with 1080p Resolution

FEATURES

Smart TV: Never miss a moment with Samsung Smart TV. Watch your favorite movies while you browse the web or explore the Smart Hub. Find more content you love by searching for shows, movies, and videos across vudu,™ Hulu Plus,™ YouTube™ and other digital content providers. Movies are handpicked for you through recommendations based on your viewing history and ratings. Access all your apps and download new ones, such as Netflix, Facebook,® YouTube,™ Hulu Plus,™ and Twitter™! Browse the web while you watch movies and TV shows, and enjoy TV while you chat with friends and family online, all on one screen. With Samsung Social TV, you can use Twitter,™ Facebook® and Google Talk™ to make comments, crack jokes and share all the fun.

Smart Content: With the introduction of the new Smart TV features, you can now enjoy a more fun and entertaining experience at home. The Smart TV offers an entire suite of easy-to-use, innovative features that entertain your family while instilling a healthy lifestyle. The features are designed to make learning fun again or to enjoy precious family moments by sharing photos and videos.

Signature Services

Family Story: Share your most precious family moments with Family Story on your new Samsung Smart TV. Family Story provides a quick way to upload photos to a gallery, even from your mobile device. You can also chat in real time, post messages and share important family events so everyone is kept up to date.

Fitness: Now you can maintain a healthy lifestyle with Samsung Smart TV's Fitness. Exercise at home through the video-on-demand service and manage your workout history. You can also track your progress by downloading the Exercise App onto your mobile device.

Kids Story: Combine home entertainment and education with Samsung's new Smart TV. Through this TV, we can recommend a variety of child-friendly programming so you can watch your child enjoy the pleasures of learning. The fun and exciting games will entertain your child and family for hours.

Apps built for TV: Download a wide range of apps for your Smart TV through the world's first TV app store. Samsung Apps has thousands of world-renowned apps, such as YouTube™ and Facebook,® and popular local ones available for downloading. Now you can enjoy your favorite apps from the comfort of your couch.

Web Browser: Easily stream your favorite movies and TV shows, download apps, shop online, browse the web, update your status on Facebook® and Twitter,™ and enjoy all of the benefits of full web browsing right on the big screen.

Search All: Quickly search for web content related to the program you're watching or access other features like VOD, apps and social networking services. You can even search USB drives or other external hard drives connected to your TV with ConnectShare™.

Smart Hub: Samsung Smart TV has retooled its Smart Hub feature to further expand its access to a world of online entertainment. Smart Hub enables multitasking and delivers an optimized viewing experience with single point access to the content that's the most important to you. It also allows you to search through hundreds of apps and use the fully optimized Web Browser for a seamless user experience.

WiFi built-in: With a wireless LAN built right into the TV, it is easier than ever to browse the web right on the big screen.

AllShare™ Play: Enables your TV to wirelessly access and stream content from any compatible device, like a PC. That means you can share movies, photos and music all through a single device — your TV. Now with the benefits of cloud technology, you can access and even share content when you're away from home.

ConnectShare™ Movie: Have movies and pictures on a USB drive? Now easily view that content right on the TV. Just plug the drive into the USB port and you are ready for a big screen experience.

PICTURE QUALITY

Clear Motion Rate (CMR): A comprehensive measure of a TV's ability to display images in motion. The higher the CMR, the better. Samsung achieves high CMR numbers based on panel processing advancements. See the picture quality difference for yourself.

Wide Color Enhancer Plus: Allows you to see picture color the way the director originally intended, brought to life on your screen to bring you exceptionally vibrant, yet natural-looking images and depicts subtle details and tones.

AUDIO

10 watts x 2 audio power stereo broadcast reception: Supports multi-channel sound (MTS) and second audio program (SAP) with 181-channel capacity.

Dolby® Digital Plus/Dolby® Pulse: An advanced surround sound audio processing feature designed to optimize the TV's sound quality when viewing and listening to Internet movies, Internet music and other content played back from wired or wireless mobile phones, PCs and tablet devices.

SRS TheaterSound HD™: A high-definition audio experience that delivers surround sound multi-channel content, using built-in TV speakers to significantly enhance both the depth and dimension of audio right through the TV. Enjoy a simulated surround sound experience!

CONNECTIONS

HDMI®: 3
HDMI® (High-Definition Multimedia Interface) is a convenient, high-quality single cable digital audio/video interface for connecting the TV to a digital cable box, satellite box, DVD/Blu-ray Disc® Player, PC computers, PC portable devices, new generation tablets and devices featuring the HDMI® output.

USB: 2
Universal Serial Bus (USB) is an industry standard for connecting a variety of computer, audio and video devices to the TV. USB movie capability allows the streaming of video from storage devices, cameras, camcorders and USB drives.

Ethernet: 1

Component in: 1

Digital audio output: 1 optical

SAMSUNG

LED TV SERIES 5

UN32EH5300 32" Class (31.5" Diagonal) LED HDTV with 1080p Resolution

NET DIMENSIONS & WEIGHT (WxHxD)

TV without stand: 29.1" x 17.5" x 3.7"
TV without stand weight: 12.8 lbs
TV with stand: 29.1" x 19.6" x 7.6"
TV with stand weight: 14.3 lbs

SHIPPING DIMENSIONS & WEIGHT (WxHxD)

Dimensions: 35.5" x 20.9" x 6.4"
Weight: 17.6 lbs

WARRANTY

1-year parts and 1-year labor warranty (90-days parts and labor for commercial use) with in-home service, backed by Samsung toll-free support.

ORDER CODE

UN32EH5300FXZA

UPC

036725236929

©2012 Samsung Electronics America, Inc. All rights reserved. Samsung is a registered trademark of Samsung Electronics Co., Ltd.

Design and specifications are subject to change without notice. Non-metric weights and measurements are approximate. HDMI, the HDMI logo and High-Definition Multimedia Interface are trademarks or registered trademarks of HDMI Licensing LLC.

ConnectShare, AllShare and Samsung Smart TV are trademarks of Samsung Electronics Co., Ltd. YouTube and the YouTube logo are trademarks of Google Inc.

All other product and brand names are trademarks or registered trademarks of their respective owners.

Screen images are simulated.

SAMSUNG

SONY

KDL-48W650D

48” class (47.5” diag) Built-in Wi-Fi® with Full HD TV

The best in entertainment. Access a world of movies, TV and apps[3], and enjoy every moment in picture quality that goes beyond Full HD. With X-Reality PRO™, you’ll enjoy stunning clarity, sharpness and a more refined picture.



Bullets

- Stunning Full HD with the clarity and sharpness of X-Reality PRO™
- Access YouTube™ and more with built-in Wi-Fi®[3]
- Living-room friendly, slim design
- Keep wires out of sight
- Precise motion clarity with Motionflow™ XR 240
- Enjoy pure, natural audio with smooth reproduction

Features

X-Reality PRO™: a cleaner, more refined picture

Enjoy outstanding clarity, sharpness and picture quality with everything you watch. Our combination of noise reduction technologies sharpen every scene, so the picture gleams with clear detail.

Enjoy stunning Full HD 1080p

Experience the detail of Full HD 1080p across all your entertainment. From Blu-ray Discs™ to your favorite TV shows, you can see it all in perfect clarity on the big screen with this Sony TV.

Great entertainment and apps wirelessly with built-in Wi-Fi®

Link up easily to your home network. With built-in Wi-Fi®, you’re free to go online and browse movies, enjoy video channels like YouTube™ and access services like Netflix and Hulu[3]. Best of all, you can stream entertainment from your wireless home network and the Internet and download a variety of apps without the clutter of cables.

Enjoy digital content from any USB

Enjoy your favorite digital content from any USB stick. Play music, video clips and view photo collections all through your TV with super multi-format USB play. Supporting a wide range of codecs, you can experience ultimate format versatility — simply plug in and you’re ready to go.

Incredibly slim

The screen has a narrow frame, accented with minimal bezels, so you can focus on your entertainment with near edge-to-edge pictures.

Cable management

Keep wires out of sight. All of your cables can be neatly arranged across the back of the TV and channeled into the stand, so everything looks tidy.

Motionflow™ keeps the action smooth

TV that keeps up with real life. Sony’s refresh rate technology (Motionflow™ XR 240) allows fast moving action sequences in sports and movies to be seen with precise motion clarity.

Clear Phase™ for smooth, balanced frequencies

SONY

Enjoy pure, natural audio with smooth, even reproduction of all frequencies. This TV uses a powerful computer model to analyze and compensate for inaccuracies in speaker response by "sampling" the speaker frequency with higher precision.

Your smartphone to the big screen

Screen mirroring lets you enjoy content and apps from your smartphone on your Sony TV[2]. Supersize all your memories and enjoy them on the big screen with family and friends.

Make the moment with Photo Sharing Plus

Let everyone share those special photo memories on the big screen. Up to ten people in the room can send photos and short video clips wirelessly from their smartphone straight to the TV to enjoy with a choice of your own optional background music[1]. Your TV even creates its own dedicated Wi-Fi® network — ideal for guests.

Specifications

Audio	
Bass/Treble/Balance	Balance
Speaker Configuration	2ch, Full Range (40 x 80 mm) x 2
Speaker Position	Down Firing
Speaker Type	Open Baffle
Audio Features	
Alternate Audio (Digital)	Yes
Audio Out	Fixed / Variable
Auto Mute (on no signal)	Yes
Clear Phase	Yes
Digital Out Format	Dolby Digital, DTS, PCM
Dolby®	Dolby Digital, Dolby Digital Plus, Dolby pulse
Headphone/Speaker Link	Yes
S-Master	S-Master Digital Amplifier
Sound Mode	Standard Music Cinema Game Sports
Convenience Features	
Auto Shut-off	Yes
BRAVIA® Sync™	Yes (including HDMI-CEC)
Channel Block (with password)	Analog & Digital
Multiple Language Display	English Spanish French
On/Off Timer	Yes
On-Screen Clock	Yes
Parental Control	Yes
Photo Frame Mode	Yes

Scene Select	Photo Music Cinema Game Graphics Sports Auto
Show/Hide Channels	Yes
Sleep Timer	Yes
USB Play	Yes (Supported File System: FAT16 / FAT32 / NTFS)
USB Play (Contents)	MPEG1 / MPEG2PS / MPEG2TS / AVCHD / MP4Part10 / MP4Part2 / AVI(XVID) / AVI(MotionJpeg) / WMV9 / MKV / WEBM / WAV / MP3 / WMA / JPEG
Design Features	
Stand Design	Black U Slate
Display Features	
Backlight Type	Direct LED
Dimming Type	Frame Dimming
Display Device	LCD
Display	
Aspect Ratio	16:9
Display Resolution	Full HD
Number of pixels(H x V)	1920 x 1080
Screen Size (cm)	120.9 cm
Screen Size (measured diagonally)	48" (47.6")
Viewing Angle (Right/ Left)	178 (89/89) degree
Viewing Angle (Up/ Down)	178 (89/89) degree
Energy Saving & Efficiency	
Backlight Off Mode	Yes
Dynamic Backlight Control	Yes
Power Consumption (On Mode) for Energy Star	57.00W
Power Consumption (Standby Mode) for Energy Star	0.50W
Power Saving Modes	Yes
General Features	
Closed Captions (CC)	Analog Digital
Demo Mode	Yes
Hotel Mode Menu	Yes
Inputs and Outputs	
AC Power Input	AC Adapter (Bottom)
Analog Audio Input(s) (Total)	1 (Bottom)
Audio Out	1 (Side / Hybrid w/HP and SubWoofer Out)
Component Video (Y/ Pb/Pr) Input(s)	1 (Bottom Mini Video Conversion Hybrid w/ Composite)
Composite Video Input(s)	1 (Bottom Mini Video Conversion Hybrid w/ Component)
Digital Audio Output(s)	1 (Rear)
Ethernet Connection(s)	1 (Bottom)
HDCP	HDCP1.4
HDMI PC Input Format	640 x 480 (31.5kHz, 60Hz) 800 x 600 (37.9kHz, 60Hz) 1024 x 768 (48.4kHz, 60Hz) 1280 x 768 (47.4kHz, 60Hz) 1280 x 768 (47.8kHz, 60Hz) 1360 x 768 (47.7kHz, 60Hz) 1280 x 1024 (64.0kHz, 60Hz) 1920 x 1080 (67.5kHz, 60Hz)
HDMI Signal	1080p (30,60Hz), 1080/24p, 1080i (60Hz), 720p (30,60Hz), 720/24p, 480p, 480i
HDMI™ Connection(s) (Total)	2 (1 Rear/1 Side)
Headphone Output(s)	1 (Side / Hybrid w/HP and Subwoofer Out)
RF Connection Input(s)	1 (Side)
Subwoofer Out	1 (Side / Hybrid w/HP and SubWoofer Out)

SONY

USB 2.0	2 (Side)
Network Features	
Home Network	MPEG1 / MPEG2TS / AVCHD / MP4 / AVI / WMV / LPCM / MP3 / WMA / JPEG
Internet Browser	Yes (Opera) (OTA) (Except US and some countries)
Opera Apps (System)	Yes
Photo Sharing Plus / Photo Share	Yes
Screen mirroring(Miracast)	Yes
Wi-Fi Certified	Yes
Wi-Fi Direct	Yes
Wi-Fi Frequency	2.4GHz only
Wi-Fi Standard	b/g/n
Wireless LAN	Integrated
Annual Power Consumption	108kWh/Year
Power	
Power Consumption (in Operation) max.	75W
Power Consumption (in Standby)	120V : 0.50W / 240V : 0.50W
Power Requirements (voltage)	DC 19.5V
Regulation and Standards Compliance	
VESA® Hole Pitch	7 7/8 x 7 7/8 in (200 x 200 mm)
VESA® Hole Spacing Compatible	Yes
Service and Warranty Information	
Limited Warranty Term	12 months
TV System	
Channel Coverage (Analog)	VHF: 2-13 / UHF: 14-69 / CATV: 1-135
Channel Coverage (Digital Cable)	CATV: 1-135
Channel Coverage (Digital Terrestrial)	VHF: 2-13 / UHF: 14-69
Color System	NTSC
Memory	4G
Number of Tuners (Terrestrial/Cable)	1 (Digital / Analog)
OS	Linux
TV System (Analog)	M
TV System (Digital Cable)	Clear QAM
TV System (Digital Terrestrial)	ATSC
Video	
Video Signal	1080p (60 Hz) 1080i (60 Hz) 720p (60 Hz) 480p 480i
Video Features	
24p True Cinema™ Technology	Yes
4:3 Default	Yes
Advanced Contrast Enhancer (ACE)	Yes
Auto Wide	Yes
Blinking Type	Frame Blinking
LED Motion Mode	Yes
Live Color™ Technology	Yes
Motionflow™ XR Technology	Motionflow XR 240
Picture Mode	Vivid Standard Custom Photo-Vivid Photo-Standart Photo-Custom Cinema Game Graphics Sports
Video Processing	X-Reality PRO
Wide Mode	Wide Zoom Normal Full Zoom Normal / Full1 / Full2 for PC
Weights and Measurements	
Dimensions (Approx.)	TV only: 43 x 25 3/8 x 2 5/8(3/8) in (1092 x 643 x 66(8.9) mm) TV with stand: 43 x 27 x 9 3/8 in (1092 x 683 x 235 mm)
Packaging (Approx.)	Carton dimensions: 46 1/2 x 29 5/8 x 6 3/8 in (1180 x 752 x 161 mm) Carton weight: 30.9 lbs (14 kg)
Weight (Approx.)	TV only: 22.5 lbs (10.2 kg) TV with stand: 23.6 lbs (10.7 kg)
Accessories	
Supplied Accessories	Mini-plug Video Adapter Remote Control (RMT-TX102U) Batteries (R03) AC Power Adaptor (ACDP-085S03, ACDP-085E03) AC Power Cord Spec: (Inlet C7, US plug type, 2pin, straight shape) Operating Instructions Quick Setup Guide / Supplement CUE (GA) Table Top Stand (Separate, assemble required)

SONY

1. Photos can be shared at their original size, with your Android (Android 2.3 and above) or iOS (iOS5 and above) smartphones. There's no internet connection and no apps needed.

2. The smartphone must be compatible with Miracast™ technology. Connectivity with all Miracast™ compatible devices is not guaranteed.

3. Broadband speed of at least 2.5 Mbps recommended for SD services, 10 Mbps for HD streaming. Wireless connectivity requires 802.11 home network (802.11n recommended). Network services, content, and the operating system and software of this Product may be subject to individual terms and conditions and changed, interrupted or discontinued at any time and may require fees, registration and credit card information.

© 2016 Sony Electronics Inc. All rights reserved. Reproduction in whole or in part without written permission is prohibited

Sony, X-Reality PRO, Motionflow, Clear Phase and the Sony logo are are trademarks or registered trademarks of Sony Corporation. HDMI is a trademark of HDMI Licensing LLC. . Wi-Fi, the Wi-Fi CERTIFIED logo are trademarks or registered trademarks of Wi-Fi Alliance. All other trademarks are trademarks of their respective owners. Features and specifications are subject to change without notice. /Updated: February 26, 2016

4142

DARTBOARD WITH SOFT TIP DARTS











Standing Electronic Dartboard with 24 Games, 132 Variations, and 6 Soft-Tip Darts Included

Turn your rec room into an arcade with this Arachnid Arcade Style Cabinet with Cricket Pro 650 Electronic Dart Game. This black freestanding cabinet with Bullshooter logo houses the feature-packed CricketPro 650 Electronic Dart Game, which includes a regulation 15.5" target area and 24 games with 132 options, including 5 cricket games. The LED display keeps score for up to eight players at one time, so you can have plenty of friends over for arcade-style fun. The cabinet has convenient storage with three shelves plus additional storage space under the lid for all of your darting accessories. Assembly required. Dartboard accessories included

- Features 8-player cricket with 24 games and 132 options, including 5 Cricket games, and an 8-player score display
- Dartboard has a regulation 15.5" target area as well as tournament spider and trademarked tournament colors
- Micro-thin segment dividers dramatically reduce bounce outs while the Nylon Tough segments improve playability and durability
- Dartboard features a voice prompt for players to throw, a solo play option, a player handicap feature and sleep mode
- Includes 6 soft-tip darts with extra tips, an AC adapter and mounting hardware for assembly

Specifications:

Electrical: 110V

Brand & Model: Arachnid- E650FS-BK2

Material: Wood, Dark Black

Features: Darts Included, 4 player Display

Assembled Product Dimensions (12.50 “L x 23.50 “W x 85”H)

SOURCE: https://www.walmart.com/ip/Arachnid-Cricket-Pro-650-Standing-Electronic-Dartboard-with-24-Games-132-Variations-and-6-Soft-Tip-Darts-Included/5358921

4143

TABLETOP VIDEO GAME UNIT



Pac-Man's Arcade Party - 30th Anniversary Edition
19" Cocktail Table Home Model - The brand new
30th Anniversary Edition of this timeless, classic 80's video arcade cocktail style game table called PacMan's Arcade Party is made by Namco Bandai, the original manufacturer of Pac Man Arcade Games, and plays identically as the original 80's versions, but in this new edition, 13 different Classic 80's games you loved and enjoyed are included !

19" Commercial Video Monitor - This Non-Coin Cabaret
Model includes **simulated, non-working coin mechs**
on front for cabinet realism, but coins not needed for play

Comes with **(13) THIRTEEN Classic 80's** Video Games :Pac-Man, Ms. Pac-Man, Pac-Mania, Galaga, Galaga '88, Bosconian, Dig Dug, Dragon Spirit, Galaxian, Mappy,
Rally X, Rolling Thunder and Xevious all in one cabinet !

Power Requirements : 110 Volts | Optional 220V
Monitor : 19" LCD Color Monitor
Players : 1 - 2 Player Classic 80's Video Arcade Game

Pac Man Arcade Party Cocktail Table - Home Dimensions :
Height: 30", Width: 21", Length: 37", Weight: 178 Lbs

Average retail cost: $2900

SOURCE: https://www.bmigaming.com/games-video-cocktails.htm

4144

FOOSEBALL GAMING



SKU: 55-699

Brand: Berner Billiards

Berner Billiards Premium Foosball Table in Black finish. This table features telescoping safety rods which do not protrude out the opposite side. Great if you have young children!

- Black mica cabinet
- One or Three Man Goalie Play - You Decide During Game Set Up
- 15.7 mm Telescopic Rods
- 1-3/16" thick cabinet
- 3/8" Thick non-glare playfield
- Large rubber grips
- Solid hardwood legs with support rod
- 5" Leg Levelers
- Reinforced cabinet
- Manual Scorers
- Includes 4 Balls
- This table is commercial grade
- Assembly Required

Regulation size: 55"L x 29"W x 35H"
Weight 180 pounds

SOURCE: http://www.gametables4less.com/productcart/pc/Berner-Premium-Foosball-Table-in-Black-with-both-1-3-Man-Goalie-br-FREE-SHIPPIING-16p2592.htm

4228

FIRST AID KIT, WALL MOUNTED



This compact 125-piece first aid kit meets OSHA requirements for a 25 employee job site or office. The kit contains an assortment of first aid items to quickly treat minor injuries on the job. All items are packaged in a clearly marked wall-mountable plastic case with handle. Meets ANSI Z308.1 Standard.

Dimensions: 7" w x 7.5" h x 3" d

125-Piece OSHA 10-Person First Aid Kit Contents:

- 20 Adhesive Bandage 3/4" x 3"
- 20 Adhesive Bandage 1" x 3"
- 2 Butterfly Closures
- 2 Fingertip Bandages
- 1 Triangular Bandage 40" x 40" x 56"
- 2 Gauze Pad 4" x 4" 2-Piece
- 4 Gauze Pad 3" x 3" 2-Piece
- 4 Gauze Pad 2" x 2" 2-Piece
- 1 Gauze Roll 3”
- 1 Combo Trauma Pad 5" x 9"
- 10 Cotton Top Applicators
- 1 Adhesive Tape 1/2" x 5 yds.
- 6 Burn/First Aid Cream
- 6 Sting Relief Pads
- 10 Alcohol Cleansing Pads
- 20 Antiseptic Wipes
- 1 Tweezers
- 4 Exam Gloves - 2 Pair
- 1 CPR Face Shield
- 1 First Aid Guide
- 4 Finger Splints
- 2 Safety Pins
- 1 Splinter Remover (Lancets)
- Packaged in a Hard Plastic Case with Handle.

SOURCE: https://www.firesupplydepot.com/25-person-osha-first-aid-kit-125-piece.html

4229

SDS COMPLIANCE CENTER



Keep Safety Data Sheets readily available for quick, easy access.

- Meets OSHA Right-to-Know requirements.
- **Standard** – Includes 2" SDS binder, 36" binder security chain, wire basket and mounting hardware.

MODEL NO.	DESCRIPTION	SIZE H x W x D	PRICE EACH	
			1	3+
S-15383	Standard	20 x 14 x 4"	$75	$70

DIMENSIONS:

- Ring Diameter: 1 1/2"

NOT INCLUDED:

- SDS pages

SOURCE:

https://www.uline.com/Signin/SignIn?reloc=%2fProduct%2fProductDetail%3fmodel%3dS-15383%26ref%3d0%26addfav%3dY

4234

Cabela's®

Commercial Grade 10” Slicer

Cabela’s Item Number: 54-1006



Please read this manual in its entirety prior to using this product.
Visit www.cabelas.com or call for assistance 1-800-237-4444.

WARNING

Read carefully and understand all instructions before operating. Failure to follow the safety rules and other basic safety precautions may result in serious personal injury. Save these instructions in a safe place and on hand so that they can be read when required.

	**WARNING!** Before cleaning, assembling or disassembling the MEAT SLICER, check the plug and make sure PLUG IS REMOVED FROM THE OUTLET/POWER SOURCE!
 SHARP BLADE	**WARNING!** HANDLE CAREFULLY! KEEP FINGERS AWAY FROM BLADE. NEVER USE FINGERS TO FEED FOOD BY HAND. ALWAYS USE THE FOOD Carriage! Always use the meat slicer completely assemble with food carriage and food pusher. If possible use protective cut-resistant gloves whenever handling the blade.

IMPORTANT

Before using your 10" Commercial Grade Meat Slicer for the first time, wash all parts thoroughly, taking particular care to remove all grease and oil from surface. Dry all parts thoroughly before reassembling. (*REFER TO CLEANING & MAINTENANCE SECTION OF MANUAL ON PAGE 8)*

OPERATING YOUR 10" MEAT SLICER

Now that your Cabela's 10" Commercial Grade Meat Slicer is fully assembled and ready to use, it is time to slice your favorite meats, cheeses and vegetables. Be sure to read and fully understand the General Safety Rules at the beginning of this manual before you start.

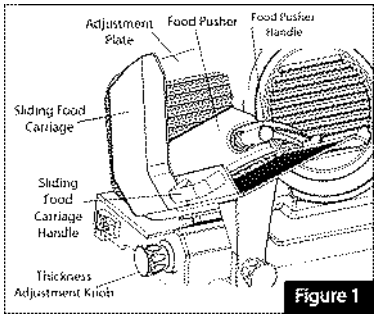

Figure 1

1. Place the Meat Slicer on a flat stable surface. Plug the appliance into a properly rated electrical outlet (120V AC, 15 Amps).
   NOTE: Be sure to remove protective blade guards from the edge of the **Blade**[9] before plugging slicer into outlet. These are used for shipping only.
2. Place food on to the **Sliding Food Carriage**[5] between the **Adjustment Plate**[13] and the **Food Pusher**[12] . To avoid injury, **ALWAYS** use the **Food Pusher Handle**[6]. **(Fig. 1)**
3. Turn the **Thickness Adjustment Knob**[2] to set the **Adjustment Plate**[13] for the desired cutting thickness. Turn clockwise for thinner cuts, counter-clockwise for thicker slicing. **(Fig. 1)**

Pyxis MedStation 4000 system typical configuration

TYPICAL COMPONENTS (MODULES) FOR EQUIPMENT #5030

***NEED TO CONFIRM IF MIDDLE AUXILLARY DRAWER TOWER IS NEEDED.



Pyxis MedStation 4000 mains



Pyxis MedStation 4000
6-drawer main

22.8" W x 27" D x 54.3" H



Pyxis MedStation 4000
4-drawer main plus bin

22.8" W x 27" D x 55" H



Pyxis MedStation 4000
2-drawer main

22.8" W x 27" D x 27.8" H



Pyxis MedStation 4000
0-drawer main

22.8" W x 27" D x 11.5" H

Pyxis MedStation 4000 auxiliaries



Pyxis MedStation 4000
7-drawer auxiliary

22.8″ W x 27″ D x 47″ H



Pyxis MedStation 4000
half-height column auxiliary
(2 doors)

31″ W x 28″ D x 43″ H



Pyxis MedStation 4000
single column auxiliary
(4 doors)

31″ W x 28″ D x 79.5″ H



Pyxis MedStation 4000
double column auxiliary
(8 doors)

52″ W x 28″ D x 79.5″ H

Related products



Pyxis SMART Remote Manager
Pyxis Remote Manager
(refrigerator not included)

Pyxis MedStation 4000 drawers



CUBIE® pockets



Carousel drawer



Matrix drawer with optional return bin



MiniDrawer *(I-6)*



MiniDrawer *(I-18)*



2D barcode scanner included

Pyxis MedStation 4000 consoles



Pyxis MedStation 4000
console and cabinet

30″ W x 24″ D x 49″ H



Pyxis MedStation 4000
workstation

16.25″ W x 8.25″ D x 17.5″ H

1 Baker J, Draves M, Ramudhin A. Analysis of the Medication Management System in Seven Hospitals. CareFusion, 2010.

2 University Medical Center Testimonial (video). CareFusion, 2003.

3 Blackmere J, Crowson K, Danley B, Hanken S, McDow L. Determining the most efficient controlled substance inventory practice that minimizes discrepancies and maximizes security. CareFusion, 2010.

4 Alliance Community Hospital Testimonial (brochure and video). CareFusion, 2005.

CareFusion
San Diego, CA

carefusion.com

CareFusion

© 2011 CareFusion Corporation or one of its subsidiaries. All rights reserved. MedStation and Pyxis are trademarks or registered trademarks of CareFusion Corporation or one of its subsidiaries. Cerner and Millenium are trademarks or registered trademarks of Cerner Corporation or one of its subsidiaries. DI3422 (1111/3000)

5051 ALTERNATE

Technical Data Sheet
Laboratory Refrigerator

Model

Horizon Series™ HLR256 Upright Laboratory Refrigerator

Specifications

Application, Rating and Electrical Data	
Application	Storage of medical and scientific products
Storage Volume	56 cu ft (1586 L)
Temperature Range	2° to 10°C
Electrical Power	115V 60Hz 230V 50Hz 230V 60Hz
Maximum Current	11.5 FLA / 6.0 FLA / 6.0 FLA
Building Supply Rating	15 amp dedicated ground circuit
Power Plug / Power Cord Length	NEMA 5-15 hospital grade plug (115V) CEE 7/7 plug (230V 50Hz) NEMA 6-15 hospital grade plug (230V 60Hz) 8-10 ft (2439-3048 mm)
Certification / Agency Listing	QPS (Certified to UL and CSA Standards) ENERGY STAR® Certified
Indoor/Outdoor Use	Indoor use only
Application Environment	Non-corrosive, non-flammable, non-explosive, 15°C to 32°C (59°F to 90°F)
Refrigeration System	
Refrigeration System	Forced-air circulation
Compressor / Number	.5 HP hermetic / 1
Condenser Type / Number	Air-cooled fin and tube / 1
Expansion Device	Cap tube
Evaporator Type	Air-cooled fin and tube
Defrost Method	Automatic
Refrigerant Charge	R134A Non-CFC
Performance Data	
Uniformity	+/-1°C at 4°C Setpoint
Warranty	
Rel.i™ (US/Canada)	5 years compressor, 2 years parts, 1 year labor
Outside US/Canada	Consult your local representative

Controller	
Interface	LED digital display, °C or °F
Power Switch	On/Off - All Circuit breaker - 230V only
Controller Type	Microprocessor-based controller with alarm/monitor
Security	Lockable door
Control Sensor	RTD
High / Low Alarms	Fully adjustable
Door Ajar Alarm	Yes
Power Failure Alarm	Yes
Min/Max Display and Reset	Yes
Battery Back-up	9-volt non-rechargeable
Dimensions and Construction	
Interior (w x h x d)	55 x 58.25 x 30.25 in 1397 x 1480 x 769 mm
Exterior (w x h x d)	59.25 x 78.75 x 35.5 in 1505 x 2001 x 902 mm
Overall Exterior (w x h x d) (Includes door handles, electrical panel, and evaporation tray)	59.25 x 78.75 x 38.5 in 1505 x 2001 x 978 mm
Insulation	Minimum of 2" (51mm) non-CFC foamed urethene insulation
Exterior / Interior Finish	Bacteria-resistant powder coating
Doors	2, Dual-pane glass
Access Ports	Sidewall with interior and exterior plugs Top for external monitoring probe(s)
Interior Storage / Capacity	8 epoxy coated shelves 22 x 29 in (559 x 737 mm) 100 lb (46 kg) max capacity / shelf
Lighting	Adjustable LED on/off switch
Casters	Standard / swivel locking
Net Weight	728 lb (331 kg)
Shipping Weight	858 lb (390 kg)
Clearance Requirements	Minimum of 8" (203mm) above and 3" (76mm) behind unit.
Options / Accessories	Chart Recorder, Floor & Wall Bracket Kit, Remote Alarms, Leveling Feet, Stainless Steel Interior, Extended Warranty

bsi. ISO 13485 Medical Devices Quality Management FM 536286

CE 0086

RoHS COMPLIANT

Technical Data Sheet
Laboratory Refrigerator

Horizon Series™ HLR256



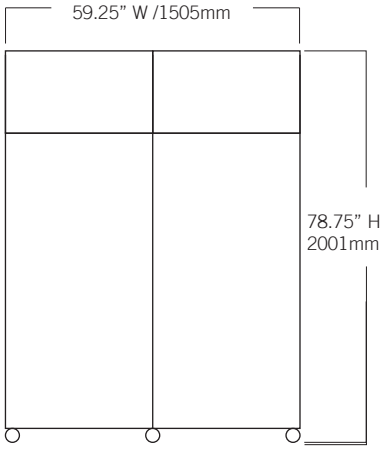

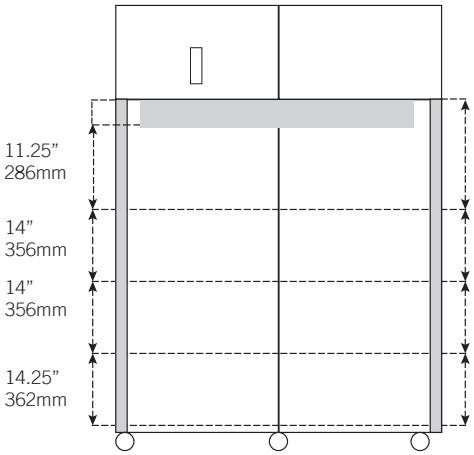

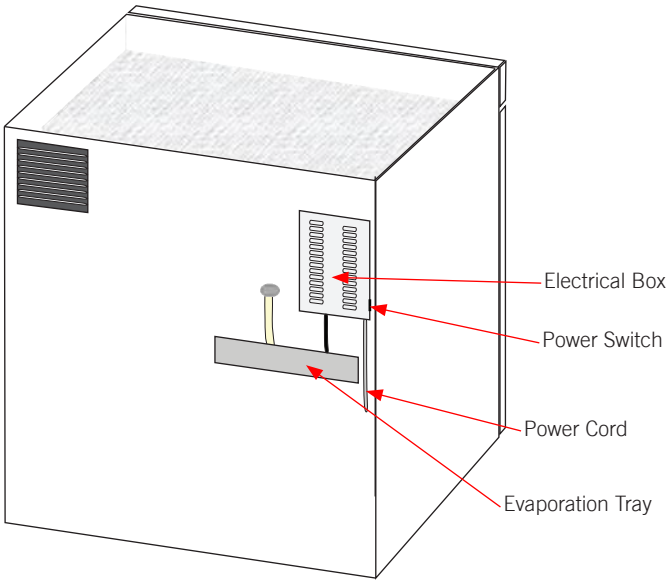

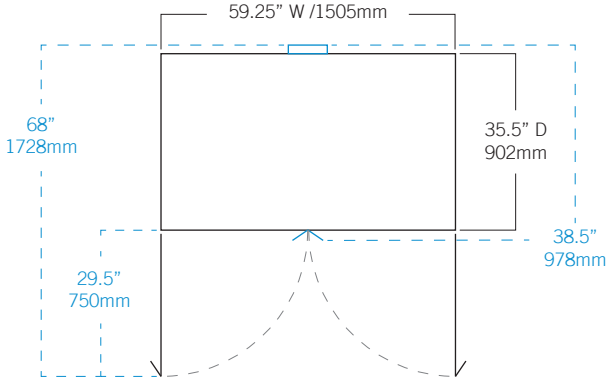

© 2015 Helmer Inc. All rights reserved. 380325-1/F 10/17
All trademarks are the property of Helmer Scientific. Specifications subject to change.

Helmer SCIENTIFIC

Technical Data Sheet
Laboratory Refrigerator

Model
i.Series® iLR256 Upright Laboratory Refrigerator

Specifications

Application, Rating and Electrical Data	
Application	Storage of medical and scientific products
Storage Volume	56 cu ft (1586 L)
Temperature Range	2° to 10°C
Electrical Power	115V 60Hz 230V 50Hz 230V 60Hz
Maximum Current	11.5 FLA / 6.0 FLA / 6.0 FLA
Building Supply Rating	15 amp dedicated ground circuit
Power Plug / Power Cord Length	NEMA 5-15 hospital grade plug (115V) CEE 7/7 plug (230V 50Hz) NEMA 6-15 hospital grade plug (230V 60Hz) 8-10 ft (2439-3048 mm)
Certification / Agency Listing	QPS (Certified to UL and CSA Standards) ENERGY STAR® Certified
Indoor/Outdoor Use	Indoor use only
Application Environment	Non-corrosive, non-flammable, non-explosive, 15°C to 32°C (59°F to 90°F)
Refrigeration System	
Refrigeration System	Forced-air circulation
Compressor / Number	.5 HP hermetic / 1
Condenser Type / Number	Air-cooled fin and tube / 1
Expansion Device	Cap tube
Evaporator Type	Air-cooled fin and tube
Defrost Method	Automatic
Refrigerant Charge	R134A Non-CFC
Performance Data	
Uniformity	+/-1°C at 4°C Setpoint
Warranty	
Rel.i™ Plus (US/Canada)	7 years compressor, 2 years parts, 1 year labor
Outside US/Canada	Consult your local representative

Controller	
Interface	i.C³® eye-level, color touchscreen
Power Switch	On/Off - All Circuit breaker - 230V only
Controller Type	Microprocessor with touchscreen input and display. Includes USB port for data retrieval.
Security	Lockable door, password protected settings
Control Sensor	RTD
Communication Ports	(2) USB Ports (1) RJ45 Hub (1) RS232 Port (optional)
High / Low Alarms	Fully adjustable
High / Low Alarm Test	Automatic (Peltier)
Door Ajar Alarm	Fully adjustable
Power Failure Alarm	Yes
Condenser Temperature Alarm	Fully adjustable
Event Log	All alarms, door openings, download via USB
Temperature Log	60 days, download via USB
Interactive Temperature Graph	Yes
Min/Max Display and Reset	Yes
Battery Back-up	20 hour display and alarm battery back-up for i.C³® touchscreen (rechargeable 12V, lead acid battery)
Dimensions and Construction	
Interior (w x h x d)	55 x 58.25 x 30.25 in 1397 x 1480 x 769 mm
Exterior (w x h x d)	59.25 x 79.5 x 35.5 in 1505 x 2020 x 902 mm
Overall Exterior (w x h x d) (Includes door handles, electrical panel, and evaporation tray)	59.25 x 79.5 x 38.5 in 1505 x 2020 x 978 mm
Insulation	Minimum of 2" (51mm) non-CFC foamed urethene insulation
Exterior / Interior Finish	Bacteria-resistant powder coating
Doors	2, Dual-pane glass
Access Ports	Sidewall with interior and exterior plugs Top for external monitoring probe(s)
Interior Storage / Capacity	8 epoxy coated shelves 22 x 29 in (559 x 737 mm) 100 lbs (46 kg) max capacity / shelf
Lighting	Adjustable LED Auto-on, on/off switch
Casters	Standard / swivel locking
Net Weight	738 lb (335 kg)
Shipping Weight	858 lb (390 kg)
Clearance Requirements	Minimum of 8" (203mm) above and 3" (76mm) behind unit.
Options / Accessories	Chart Recorder, Floor & Wall Bracket Kit, Remote Alarms, Leveling Feet, Stainless Steel Interior, Extended Warranty

bsi. ISO 13485 Medical Devices Quality Management FM 536286

CE 0086

RoHS COMPLIANT

Technical Data Sheet
Laboratory Refrigerator

i.Series® iLR256



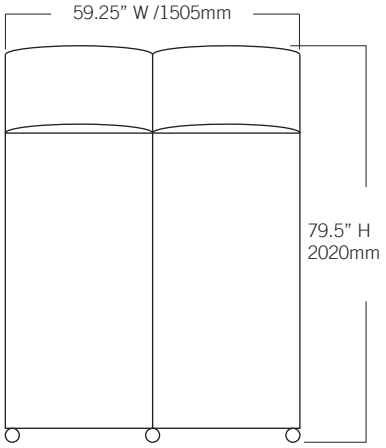

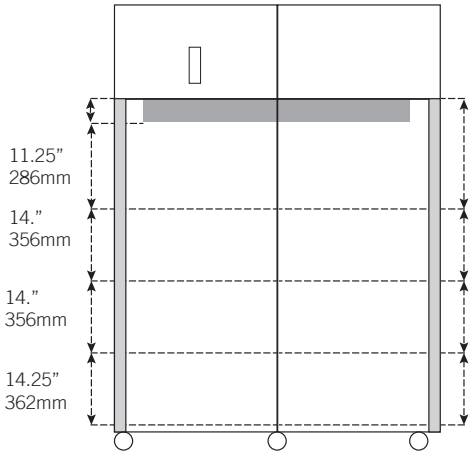

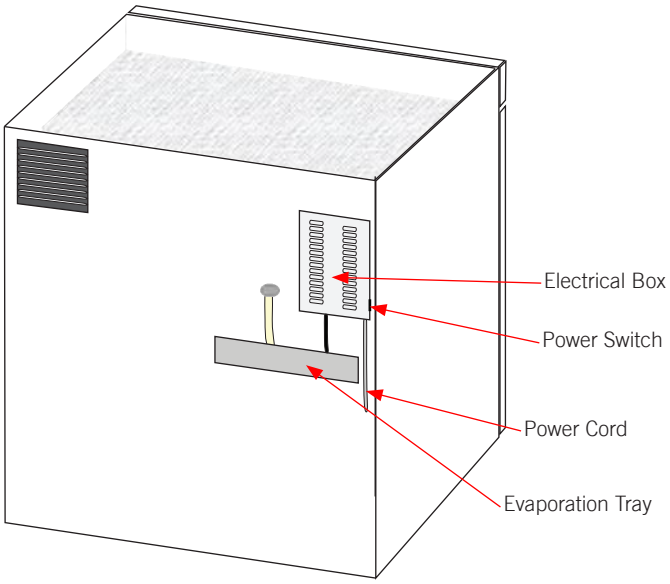

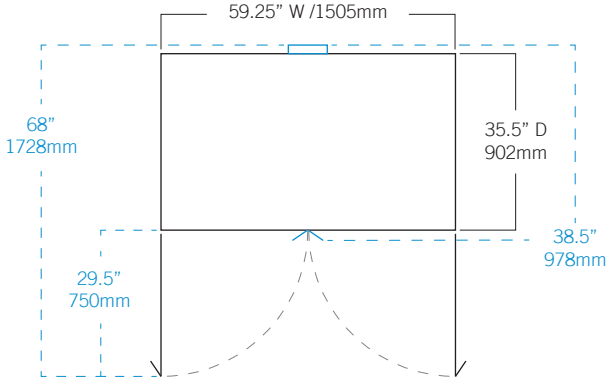

© 2016 Helmer Inc. All rights reserved. 380318-1/F 10/17
All trademarks are the property of Helmer Scientific. Specifications subject to change.

Upright Refrigerators

Laboratory & Pharmacy

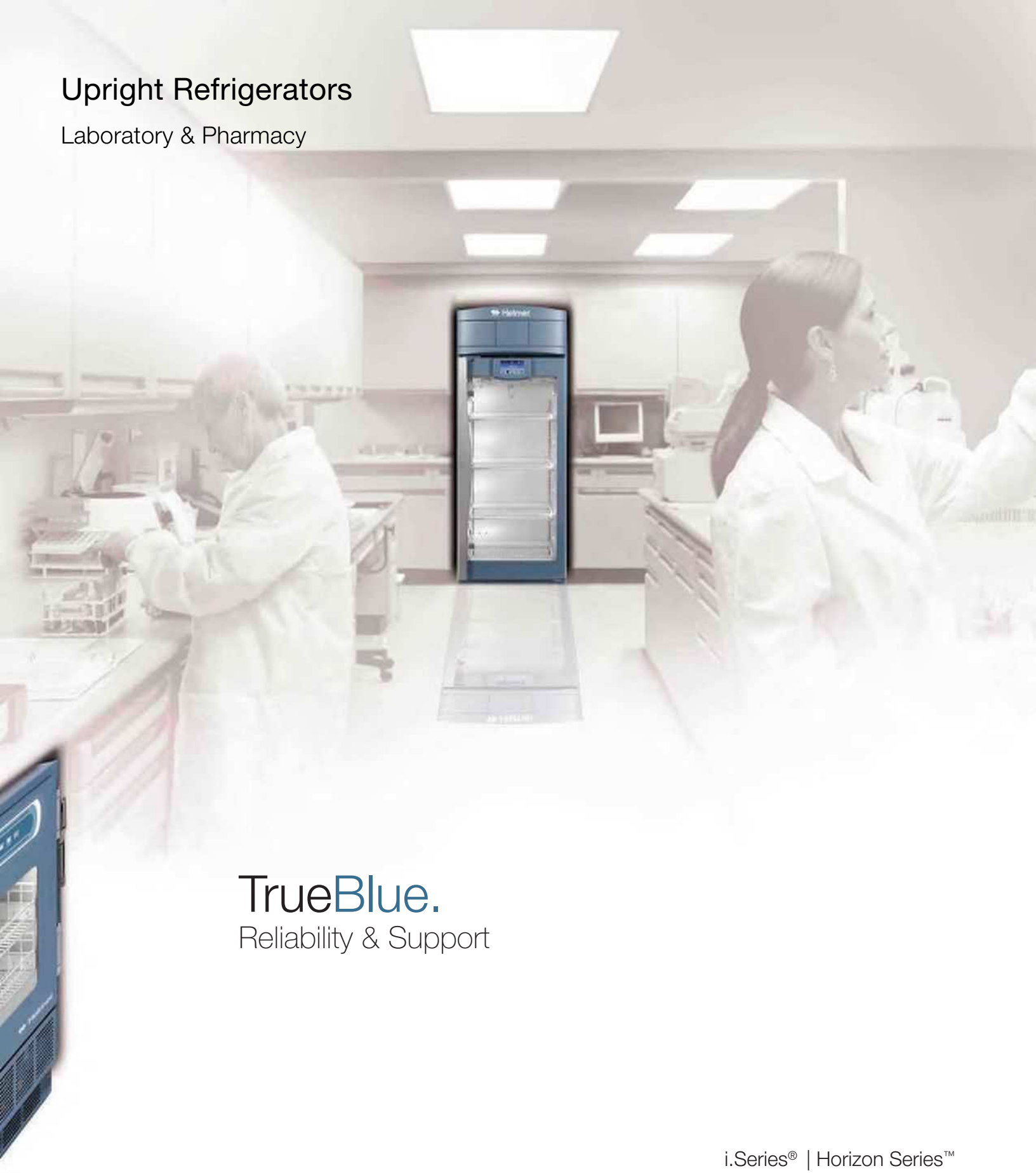

TrueBlue.

Reliability & Support

i.Series® | Horizon Series™

Helmer SCIENTIFIC

Laboratory & Pharmacy Refrigerators designed specifically for healthcare and life science applications

Helmer Scientific high-performance laboratory and pharmacy refrigerators are a result of over 40 years of proven refrigeration solutions and attention to detail. Superior temperature uniformity, outstanding reliability, and exceptional benefits bring value every day, leaving you to focus on your critical work while your products receive our TrueBlue protection.



Helmer Refrigerators Deliver

High-Quality Craftsmanship

- Superior chamber temperature uniformity and quick recovery with heavy-duty, air-cooled refrigeration system
- Temperature uniformity of +/- 1ºC
- Operating temperature range from +2ºC to +10ºC
- Bacteria-resistant powder coated exterior and interior for added security
- Sure-Seal self-closing door with magnetic closure eliminates broken door latches
- Custom storage capabilities with roll out baskets, full or half-size shelves, and stainless steel drawers provide maximum storage versatility
- Adjustable LED lighting provides energy-efficient illumination with auto-on feature and ON/OFF switch
- Hospital grade plug enhances electrical safety/serviceability

ENERGY STAR® Certification

- Certified energy-efficient refrigerators help reduce the environmental footprint of your facility.

Secure Monitoring for a Safe Storage Environment

- i.C^3® with 7" (177mm) full-color touchscreen (i.Series®)
- Microprocessor temperature controller with built-in alarm/monitor (Horizon Series™)
- Key lock
- Password protected settings (i.Series)

Designed for Convenience & Performance

- Single and double door models from 11 cf (326 L) to 56 cf (1586 L)
- ADA compliant door handle(s)
- Position flush with a countertop, cabinet, or other equipment with no additional clearance required
- Recessed floor contains spills for easy clean-up
- Door-mounted, eye-level controls (i.Series)
- Rechargeable battery backup (i.C^3)

More choices

Product Line Overview

Helmer offers two distinct lines of upright refrigerators. Both lines offer high quality construction and attention to detail throughout. The primary difference between lines is the means of monitoring and control.

i.Series®

The i.Series features thte i.C³, a door-mounted touchscreen information center with constant temperature monitoring and control. It is easy to view and provides status of critical information, alarms, and events in one secure location.

Horizon Series™

The Horizon Series offers a digital microprocessor temperature controller with a built-in alarm.









Laboratory Refrigerator Selection Guide

+2°C to +10°C Factory set to +4°C

Select the Optimal Capacity & Design		i.Series®					Horizon Series™				
		iLR111	iLR120	iLR125	iLR245	iLR256	HLR111	HLR120	HLR125	HLR245	HLR256
Application Cabinet		Laboratory Slimline	Laboratory Upright	Laboratory Upright	Laboratory Upright	Laboratory Upright	Laboratory Slimline	Laboratory Upright	Laboratory Upright	Laboratory Upright	Laboratory Upright
Capacity	cu ft / liters	11.5 326	20.2 572	25.2 714	44.9 1271	56 1585	11.5 326	20.2 572	25.2 714	44.9 1271	56 1585
Storage	standard	4 shelves	4 shelves	4 shelves	8 shelves	8 shelves	4 shelves	4 shelves	4 shelves	8 shelves	8 shelves

Pharmacy Refrigerator Selection Guide - i.Series®

+2°C to +10°C Factory set to +4°C

Select the Optimal Capacity and Design		i.Series®						
		iPR111	iPR120	iPR125	iPR225[1]	iPR245	iPR256	iPR456[1]
Application Cabinet		Pharmacy Slimline	Pharmacy Upright	Pharmacy Upright	Pharmacy Pass-Thru	Pharmacy Upright	Pharmacy Upright	Pharmacy Pass-Thru
Capacity	cu ft / liters	11.5 326	20.2 572	25.2 714	26.5 750	44.9 1271	56 1585	58 1642
Storage	standard	1 shelf 5 baskets	1 shelf 6 baskets	1 shelf 6 baskets	3 shelves 3 drawers	2 shelves 12 baskets	2 shelves 12 baskets	6 shelves 6 drawers

Pharmacy Refrigerator Selection Guide - Horizon Series™

+2°C to +10°C Factory set to +4°C

Select the Optimal Capacity and Design		Horizon Series™						
		HPR111	HPR120	HPR125	HPR225[1]	HPR245	HPR256	HPR456[1]
Application Cabinet		Pharmacy Slimline	Pharmacy Upright	Pharmacy Upright	Pharmacy Pass-Thru	Pharmacy Upright	Pharmacy Upright	Pharmacy Pass-Thru
Capacity	cu ft / liters	11.5 326	20.2 572	25.2 714	26.5 750	44.9 1271	56 1585	58 1642
Storage	standard	1 shelf 5 baskets	1 shelf 6 baskets	1 shelf 6 baskets	3 shelves 3 drawers	2 shelves 12 baskets	2 shelves 12 baskets	6 shelves 6 drawers

[1]See Pass-Thru Refrigerator Brochure for complete information

Outstanding features at-a-glance

Refrigeration System

- Heavy-duty, air-cooled refrigeration system with non-CFC R134A refrigerant provides high efficiency and is environmentally friendly
- Forced-air circulation maintains chamber uniformity and provides quick recovery after door openings
- No defrost cycle required to maintain constant temperature
- Auto condensate evaporation
- Evaporator fan(s) shut off during door openings to maintain stable temperatures



Cabinet Construction

- Bacteria-resistant powder coated interior and exterior, and door handle(s)
- Ergonomic Sure-Grip door handle is padded for comfort
- Superior engineered frame for maximum rigidity
- Dual-pane glass door(s) with ADA compliant full-length handles
- Innovative self-closing Sure-Seal door system with magnetic seal
- Key lock
- LED lighting with control panel mounted switch
- - Auto ON/OFF (i.Series)
- Minimum of 2" (51mm) non-CFC foamed urethane insultion
- Swivel locking casters
- Access port located in top of cabinet for external monitoring probe(s) and one side-wall access port with interior and exterior plugs.
- Rechargeable battery is environmentally friendly and long-lasting (i.C^3)
- Recessed floor contains spills for easy clean-up
- Hospital grade plug and cord

Automatic high and low alarm tests heat and cool probes at the touch of a button, safely testing probes without affecting chamber temperature, while saving valuable time.

Storage

- Adjustable shelves (Laboratory and Pharmacy)
- Roll-out baskets with fully extendable slides (Pharmacy)
- Side and rear guards prevent items from falling off shelves
- Stainless steel standards guard against rust and corrosion

ENERGY STAR® Certified

Laboratory and Pharmacy refrigerators have been recognized by the Environmental Protection Agency (EPA) as meeting new EnergyStar® standards

Temperature Control and Monitoring

i.Series®	Horizon Series®
	
Exclusive i.C³® Information Center	**Microprocessor temperature controller with alarm/monitor**
· 7" (177mm) full-color, door-mounted touchscreen	· LED digital display, top bezel mounted
· Automatic high/low alarm testing (Peltier based)	· Manual alarm test
· USB ports (2) for download/upload/upgrade	
· Optional RS232 data port	
· Dry contact alarm connection	· Dry contact alarm connection
· Password protected settings	
· Dual alarm probes[1], stainless steel in product simulation bottle	· Single alarm probe, stainless steel in product simulation bottle
· Digital temperature display / °C or°F	· LED temperature display / °C or °F
· Event log displays date, time, and temperature data	
· Compressor log displays compressor temperature performance	
· Interactive temperature graph	
· Min/max display and reset	· Min/max display and reset
· Digital calibration	· Digital calibration
· Rechargeable battery backup	· Battery backup
· Date and time display	
· Alarm mute with adjustable ring-back interval	· Alarm mute with 5-minute ring-back interval
· Adjustable alarm volume	· Alarm silence with key switch
· Four alarm tones	
· High and low temperature alarms	· High and low temperature alarms
· Door ajar alarm	· Door ajar alarm
· Power failure alarm	· Power failure alarm
· Condenser temperature alarm	
· Ethernet[2]	

[1]11 cu ft (326 liter) models: single alarm probe and upper temperature display only
[2]Via customer developed software

Configurability

A number of high-performance options and accessories are available for laboratory and pharmacy refrigerators. Storage can be customized with various combinations of shelves, roll-out baskets, pull-out drawers, or locking drawers. Configured options include heated glass doors which reduce condensation. Storage trays are also available to organize medicines and pharmaceuticals. See page 8 for a complete list of options and accessories.









Exclusively on i.Series®

i.C³® Information Center

The i.C³ Information Center provides constant temperature monitoring and multiple information logs while offering security features to keep settings safe. It consolidates the refrigerator or freezer information in one convenient location and allows the user to optimize performance with just a fingerstroke. The icon driven monitoring system features a door mounted 7" (177mm) full-color touchscreen ergonomically angled for easy viewing.





The i.C³ Information Center includes:

System Status Console
Snapshot of current conditions

Monitor the status of the unit with one quick glance at the home screen.

Status Available
- Current temperature
- Current alarm conditions and alerts in progress
- Unacknowledged alarms
- Minimum and maximum temperatures
- Historical temperature data



Information and Event Center
Performance history

All the information you need is one touch away. The interactive temperature graph provides a visual history of performance and a shortcut to the event log with detailed status information. Event acknowledgement can be captured on-screen complete with signature, date, and time-stamp.
- Event status, start and end times
- Door opening status
- Min/Max temps during alarm conditions
- 7 and 1-day graph view

Guardian Plus Protection
Protect settings and limit access

Password protected setpoints ensure that proper temperatures are maintained, keeping products secure. With the addition of Optional Integrated Access Control, access to the refrigerator or freezer can be secured by an electromagnetic lock controlled by PIN entry.
- 100 User IDs can be set up directly from the i.C³ and programmed with an individual access PIN
- Access Control keypad can be set as an alternative Home Screen
- Access Control log provides an audit trail of door entries and includes the User ID, Date, Time, Duration, and Method of Entry
- Key override



Data Transfer Center
Export data with ease

Temperature, event, and optional access control data is simply exported via the USB port in the side of the i.C³ Information Center and can be opened in a spreadsheet program. Firmware updates can also be uploaded.

Specifications

Model/Series	Doors	Volume (cu ft /liter)	Interior Dimensions WxHxD (in/mm)	Exterior Dimensions[1] WxHxD (in/mm)	Shelves	Baskets	ENERGY STAR® Certified	Electrical Voltage (Hz)	Amps (FLA)	Net Weight lb / kg	Warranty[2]
Laboratory Refrigerators Temperature Range +2° to +10°C, factory set to +4°C											
iLR111 i.Series	1	11.5 326	20 x 49.5 x 20 508 x 1258 x 508	24.25 x 70.5 x 24.5 616 x 1791 x 623	4	0		115 (60) 230 (50) 230 (60)	7 3.5 3.5	322 147	Rel.i™ Plus 7/2/1
HLR111 Horizon Series	1	11.5 326	20 x 49.5 x 20 508 x 1258 x 508	24.25 x 70.5 x 24.5 616 x 1791 x 623	4	0		115 (60) 230 (50) 230 (60)	7 3.5 3.5	315 143	Rel.i™ 5/2/1
iLR120 i.Series	1	20.2 572	24.75 x 58.25 x 24.25 629 x 1480 x 616	29.5 x 79.5 x 29.5 750 x 2020 x 750	4	0	Yes No No	115 (60) 230 (50) 230 (60)	7.5 4.2 4.2	473 215	Rel.i™ Plus 7/2/1
HLR120 Horizon Series	1	20.2 572	24.75 x 58.25 x 24.25 629 x 1480 x 616	29.5 x 78.75 x 29.5 750 x 2001 x 750	4	0	Yes No No	115 (60) 230 (50) 230 (60)	7.5 4.2 4.2	470 214	Rel.i™ 5/2/1
iLR125 i.Series	1	25.2 714	24.75 x 58.25 x 30.25 629 x 1480 x 769	29.5 x 79.5 x 35.5 750 x 2020 x 902	4	0	Yes No No	115 (60) 230 (50) 230 (60)	7.5 4.2 4.2	484 220	Rel.i™ Plus 7/2/1
HLR125 Horizon Series	1	25.2 714	24.75 x 58.25 x 30.25 629 x 1480 x 769	29.5 x 78.75 x 35.5 750 x 2001 x 902	4	0	Yes No No	115 (60) 230 (50) 230 (60)	7.5 4.2 4.2	481 219	Rel.i™ 5/2/1
iLR245 i.Series	2	44.9 1271	55 x 58.25 x 24.25 1397 x 1480 x 616	59.25 x 79.5 x 29.5 1505 x 2020 x 750	8	0	Yes No No	115 (60) 230 (50) 230 (60)	11.5 6.0 6.0	702 319	Rel.i™ Plus 7/2/1
HLR245 Horizon Series	2	44.9 1271	55 x 58.25 x 24.25 1397 x 1480 x 616	59.25 x 78.75 x 29.5 1505 x 2001 x 750	8	0	Yes No No	115 (60) 230 (50) 230 (60)	11.5 6.0 6.0	701 318	Rel.i™ 5/2/1
iLR256 i.Series	2	56 1586	55 x 58.25 x 30.25 1397 x 1480 x 769	59.25 x 79.5 x 35.5 1505 x 2020 x 902	8	0	Yes No No	115 (60) 230 (50) 230 (60)	11.5 6.0 6.0	738 335	Rel.i™ Plus 7/2/1
HLR256 Horizon Series	2	56 1586	55 x 58.25 x 30.25 1397 x 1480 x 769	59.25 x 78.75 x 35.5 1505 x 2001 x 902	8	0	Yes No No	115 (60) 230 (50) 230 (60)	11.5 6.0 6.0	728 331	Rel.i™ 5/2/1
Pharmacy Refrigerators Temperature Range +2° to +10°C, factory set to +4°C											
iPR111 i.Series	1	11.5 326	20 x 49.5 x 20 508 x 1258 x 508	24.25 x 70.5 x 24.5 616 x 1791 x 623	1	5		115 (60) 230 (50) 230 (60)	7 3.5 3.5	357 162	Rel.i™ Plus 7/2/1
HPR111 Horizon Series	1	11.5 326	20 x 49.5 x 20 508 x 1258 x 508	24.25 x 70.5 x 24.5 616 x 1791 x 623	1	5		115 (60) 230 (50) 230 (60)	7 3.5 3.5	350 159	Rel.i™ 5/2/1
iPR120 i.Series	1	20.2 572	24.75 x 58.25 x 24.25 629 x 1480 x 616	29.5 x 79.5 x 29.5 750 x 2020 x 750	1	6	Yes No No	115 (60) 230 (50) 230 (60)	7.5 4.2 4.2	525 239	Rel.i™ Plus 7/2/1
HPR120 Horizon Series	1	20.2 572	24.75 x 58.25 x 24.25 629 x 1480 x 616	29.5 x 78.75 x 29.5 750 x 2001 x 750	1	6	Yes No No	115 (60) 230 (50) 230 (60)	7.5 4.2 4.2	522 237	Rel.i™ 5/2/1
iPR125 i.Series	1	25.2 714	24.75 x 58.25 x 30.25 629 x 1480 x 769	29.5 x 79.5 x 35.5 750 x 2020 x 902	1	6	Yes No No	115 (60) 230 (50) 230 (60)	7.5 4.2 4.2	552 251	Rel.i™ Plus 7/2/1
HPR125 Horizon Series	1	25.2 714	24.75 x 58.25 x 30.25 629 x 1480 x 769	29.5 x 78.75 x 35.5 750 x 2001 x 902	1	6	Yes No No	115 (60) 230 (50) 230 (60)	7.5 4.2 4.2	549 250	Rel.i™ 5/2/1
iPR245 i.Series	2	44.9 1271	55 x 58.25 x 24.25 1397 x 1480 x 616	59.25 x 79.5 x 29.5 1505 x 2020 x 750	2	12	Yes No No	115 (60) 230 (50) 230 (60)	11.5 6.0 6.0	824 374	Rel.i™ Plus 7/2/1
HPR245 Horizon Series	2	44.9 1271	55 x 58.25 x 24.25 1397 x 1480 x 616	59.25 x 78.75 x 29.5 1505 x 2001 x 750	2	12	Yes No No	115 (60) 230 (50) 230 (60)	11.5 6.0 6.0	823 374	Rel.i™ 5/2/1
iPR256 i.Series	2	56 1586	55 x 58.25 x 30.25 1397 x 1480 x 769	59.25 x 79.5 x 35.5 1505 x 2020 x 902	2	12	Yes No No	115 (60) 230 (50) 230 (60)	11.5 6.0 6.0	876 398	Rel.i™ Plus 7/2/1
HPR256 Horizon Series	2	56 1586	55 x 58.25 x 30.25 1397 x 1480 x 769	59.25 x 78.75 x 35.5 1505 x 2001 x 902	2	12	Yes No No	115 (60) 230 (50) 230 (60)	11.5 6.0 6.0	866 393	Rel.i™ 5/2/1

Specifications subject to change · Certified to applicable UL and CSA standards by a NRTL
Technical Data Sheets for all Laboratory and Pharmacy Refrigerators are available at www.helmerinc.com
Published interior volumes are nominal; usable cu ft (liters) capacity may be offset by protrusions into cabinet.
[1]Does not include door handle, electrical panel, and evaporation tray.
[2]Warranties applicable in the U.S. and Canada. For international warranty information, contact distributor

High-Performance
Options & Accessories

Options and accessories have been specifically designed to enhance the performance of Helmer Scientific refrigerators and freezers. Some options are factory installed and must be specified with your original order. Please contact your sales representative for more information.

Integrated Electromagnetic Access Control

i.Series®



Integrated electromagnetic access control offers secure access to the refrigerator or freezer via the i.C³ Information Center. An electromagnetic lock is integrated into the unit and controlled by PIN entry.

- Up to 100 User IDs can be set up directly from the i.C³ and programmed with an individual access PIN
- The Access Control display can be set as an alternative Home Screen.
- Access Control log provides audit trail of door entries and can be downloaded
- Key override is included

Horizon Series



The Horizon access control keypad provide fail-secure digital keypad access. A lock is integrated into the unit and unlocked by entering a user code on the keypad.

- Up to 100 User Codes can be entered into the keypad
- Key override included

Roll-out Baskets
Wire baskets with fully extendable slides are offered as an alternative to standard shelving.

Shelves
Additional shelves are adjustable, and designed to fit individual cabinets. Full-size, half-size, and bridge shelves available.

Pull-out Drawers
Stainless steel drawers are liquid-tight. (i.Series and Horizon Series)

Locking Drawers
Stainless steel locking drawer includes cover and key lock for secure closure.

Solid Doors
Ideal for storage of light sensitve products.

Heated Glass Doors
Removes fogging and condensation in humid environments

Access Ports
A second side-wall access port can be factory installed, 1.75" (45mm). Custom access ports are available.

Vapor-Proof Duplex Outlet
Duplex outlet power is independent from refrierator power cord. Limit 1 per refrigerator. (115V only)

Temperature Chart Recorders
Optional 4" (102mm) chart, 7-day, inkless standalone temperature recorder. Includes battery backup and box of 52 charts.

- Chart Recorder Paper
  4" (102mm) diameter, -5°C to +20°C, package of 52 (ref)
  4" (102mm) diameter, -50°C to 0°C, package of 52 (frz)

Remote Alarms
For audible and visual signal of an alarm condition. Extend existing alarms to remote locations within a facility. Operational up to 3000' (914m) from cabinet. Can be connected to a central alarm system.

Remote Lock Adapter Kits
Special accessories that allow medication dispensing locks to be properly installed on Helmer Scientific refrigerators and freezers. Compatible with most systems.

Storage Trays
Package includes tray, dividers, and rails to simplify and organize storage areas.

Drawer Dividers
Polycarbonate upright or angled dividers for use in pull-out drawers.

Leveling Feet
Field-installable kit. Can be installed without tipping unit.

Left-hinged single door
Stainless steel interior
Chromatography kit
Floor and Wall Bracket Kit
Stacking Kit
IQ/OQ Equipment Validation Guide
Temperature Validation
Certificate of Calibration
i.C³ Screen Protectors
USB Flashdrive

Helmer SCIENTIFIC

14400 Bergen Boulevard · Noblesville, IN 46060 USA
Toll Free (U.S. and Canada): 800.743.5637
Phone: +1.317.773.9073 · Fax: 317.773.9082
Email: sales@helmerinc.com · www.helmerinc.com

All registered Helmer trademarks or trademarks are the property of Helmer, Inc. in the United States of America.
All other trademarks are the property of their respective owners.

© 2015-2017 Helmer, Inc. All rights reserved. 380032-1/G 9-17

5824g

SonoSite Edge II

TAKING TRANSDUCER DURABILITY TO THE ARMORED LEVEL

How often do transducer cables get rolled over, stepped on or twisted? Talking to our customers, the response is "all the time," "too often to count," or simply "a lot."

With an embedded metal jacket, armored cables protect your transducers from these common scenarios. By safeguarding electrical connections inside, armored cables help maintain image quality over the life of your transducer.



Standard Cable



Armored Cable

ULTRASOUND FOR CLARITY AND CONFIDENCE.

5

TECHNOLOGY DRIVEN
5-YEAR STANDARD WARRANTY
MADE IN THE USA



5824g

FUJIFILM
Value from Innovation

SonoSite Edge II

SONOSITE EDGE II TRANSDUCERS



L38xi ●●

10-5 MHz Linear

Applications:
lung, nerve, small parts, arterial, venous

Scan depth: 9 cm



HFL38xi ●

13-6 MHz Linear

Applications:
breast, lung, musculoskeletal, nerve, ophthalmic, small parts, arterial, venous

Scan depth: 6 cm



HFL50x ●

15-6 MHz Linear

Applications:
breast, musculoskeletal, nerve, small parts

Scan depth: 6 cm



L25x ●●

13-6 MHz Linear

Applications:
lung, musculoskeletal, nerve, superficial, arterial, venous, ophthalmic

Scan depth: 6 cm



C11x

8-5 MHz Curved

Applications:
abdominal, neonatal, nerve, arterial, venous, cardiology (vet)

Scan depth: 13.5 cm



rC60xi ●●●

5-2 MHz Curved

Applications:
abdominal, musculoskeletal, nerve, ob, gyn

Scan depth: 30 cm



ICTx ●

8-5 MHz Curved

Applications:
ob, gyn

Scan depth: 13 cm



rP19x ●●

5-1 MHz Phased

Applications:
abdominal, cardiology, lung, ob, orbital, TCD

Scan depth: 35 cm



P10x ●

8-4 MHz Phased

Applications:
ped. abdominal, ped. cardiology, neonatal head

Scan depth: 14 cm



HSL25x

13-6 MHz Linear

Applications:
lung, musculoskeletal, nerve, superficial, arterial, venous, ophthalmic

Scan depth: 6 cm



TEExi

8-3 MHz Multi

Applications:
adult cardiology, multiplane transesophageal 180° rotation of the imaging plane, providing a 360° field of view

Scan depth: 18 cm



L52x (Vet) ●

10-5 MHz Linear

Applications:
musculoskeletal, ob, arterial

Scan depth: 15 cm



C35x ●

8-3 MHz Curved

Applications:
abdominal, musculoskeletal, nerve, ob, spine

Scan depth: 15 cm



C8x ●

8-5 MHz Curved

Applications:
prostate

Scan depth: 11.5 cm



P11x

10-5 MHz Phased

Applications:
venous, vascular

Scan depth: 12 cm

- **DirectClear Technology.**
- **Optional Armored Cable.**
- **Needle guides and kits available.**
- **A transverse needle guide available.**

5824g

SYSTEM SPECIFICATIONS

System weight	9.21 lbs/4.18 kg with battery
Dimensions	12.8" x 12.1" x 2.5"/ 32.6 cm x 30.7 cm x 6.4 cm (L x W x H)
Display	12.1"/30.7 cm diagonal LCD (NTSC or PAL) with chemically-etched glass layer
Viewing Angles	85 degrees up/down/left/right
Architecture	All-digital broadband
Dynamic range	Up to 165 dB
Gray scale	256 shades
HIPAA compliance	Comprehensive tool set

IMAGING MODES

2D / Tissue Harmonic Imaging / M-Mode

Velocity Color Doppler / Color Power Doppler

PW, PW Tissue Doppler and CW

Doppler angle, correct after freeze

IMAGE PROCESSING

SonoADAPT™ Tissue Optimization

SonoHD2™ Imaging Technology

Dual Imaging, Duplex Imaging, 2x pan/zoom capability, Dynamic range and gain

ColorHD™ Technology

STEEP NEEDLE PROFILING

C35x - Nerve, MSK, Spine

HFL38xi – Nerve, MSK, Breast, Small Parts, Arterial, Venous

HFL50x – Nerve, MSK, Breast, Small Parts

L25x – Nerve, MSK, Arterial, Venous

HSL25x – Nerve, MSK, Arterial, Venous

L38xi – Nerve

rC60xi – Nerve, MSK

USER INTERFACE AND REMAPPABLE CONTROLS

Softkeys to drive advanced features

Programmable A and B keys: each can be assigned by the user for increased ease of use

Low profile keyboard, sealed completely to edge for maximum infection control

Track pad with select key for easy operation and navigation

Doppler controls: angle, steer, scale, baseline, gain and volume

Image acquisition keys: review, report, clip store, save

Dedicated AutoGain and exam keys to allow quick activation

Color controls: size/position, angle, scale, baseline and invert

TRANSDUCERS

Broadband/Multifrequency:

DirectClear Technology (rC60xi, rP19x)

Armored Cable Technology (Optional on rC60xi, rP19x, L38xi, L52x)

Linear Array, Curved Array, Phased Array, Multiplane TEE and Micro-Convex

Center line marker for linear transducers

Exam types: abdominal, breast, cardiology, gyn, lung, musculoskeletal, neonatal, nerve, ob, ophthalmic, orbital, small parts, spine, superficial, TCD, arterial, venous

DURABILITY

Drop-tested at 3 feet/91.4 cm

APPLICATION SPECIFIC CALCULATIONS

OB/Gyn/Fertility: Diameter/ellipse measurements, volume, ten follicle measurements, estimated fetal weight, established due date, gestational age, last menstrual period, growth charts, user-defined tables, multiple user-selectable authors, ratios, amniotic fluid index, patient report, humerus and tibia measurement and charts, HR, Fetal HR, MCA, UMBA, Ovarian Volume, Follicle Volume, Uterine Volume, Endometrial thickness

Arterial: Diameter/ellipse/trace measurements, volume, volume flow, percent diameter and area reduction, Lt/Rt CCA, ICA, ECA, ICA/CCA ratio, peak trace, ICA/CCA ratio, patient report, HR, Bulb, Vertebral Artery, TAP

Cardiac: LVO, Automated Cardiac Output package and patient report including: ventricular, aortic and atrial measurements; ejection fraction, volume measurements, Simpson's rule, continuity equation, pressure half-time and cardiac output; IVC Collapse Ratio, LA/RA Volume, TAPSE, PA AT, TV E, A, PHT, TVI, MV time, Pulm Veins, LV Mass, TDI e', TDI a', HR, dP:dT, Qp/Qs

Ability to view EF and FS simultaneously

Transcranial Doppler (TCD): Complete TCD package including Time Average Peak (TAP)

ONBOARD IMAGE AND CLIP STORAGE/REVIEW

16GB internal flash memory storage capability

Storage support for up to 500 patients

Clip Store capability (maximum single clip length: 60 seconds)

Clip Store capability via either number of heart cycles (using the ECG) or time base. Maximum storage in ECG beats mode is 10 heart cycles. Maximum storage in time base mode is 60 seconds

Start/Stop toggle capability for clips

USB Auto Export

Encryption of patient data on system

Cine review up to 255 frame-by-frame images

MEASUREMENT TOOLS, PICTOGRAMS AND ANNOTATIONS

2D: Distance calipers, ellipse and manual trace

Doppler: Velocity measurements, pressure half time, auto and manual trace

M-Mode: Distance and time measurements, heart rate calculation

User-selectable text and pictograms

User-defined, application-specific annotations

Biopsy guidelines

CONNECTIVITY (EXTERNAL DATA MANAGEMENT)

SonoSite Patient Data Archival Software (PDAS) for Wireless/Wired Image, Report Management

Q-path ultrasound management system

DICOM® Image Management (TCP/IP): Print and Store, Modality Work List, Storage Commit: Modality, Perform, Procedure Step

PC Workstation Image Management (TCP/IP, USB): Direct writing capability to USB 2.0 mass storage removable media (PC and MAC compatible)

Supported export formats: MPEG-4 (H.264), JPEG, BMP, and HTML

CONNECTIVITY (SYSTEM PORTS)

Ports, External Video/Audio:

USB ports (2)

ECG input (1)

Integrated Speakers

With Mini-dock:

S-Video (in/out) to VCR for record and playback

DVI output

Composite video output (NTSC/PAL) to VCR or video printer

Audio output

Ethernet or Wireless Image/Data Transfer

USB Port (1)

RS-232 Transfer

POWER SUPPLY

System operates via battery or AC power

Rechargeable lithium-ion battery

AC: universal power adapter, 100-240 VAC, 50/60 Hz input, 15 VDC output

Less than 25 sec. from power-on to scanning

EDGE II STAND AND PERIPHERALS

Mini-dock, transducer and gel holders

AC Cord Retainer

Larger baskets with easy removal feature for cleaning

Casters to prevent accidental locking

Optional Triple Transducer Connect (TTC) to quickly activate transducers electronically

Optional foot switch

Optional PowerPark and PowerPack

OPTIONAL PERIPHERALS

Printers: Medical-grade black and white or color

External data input devices: Bar code reader

ECG Slave Cable and Adapter Kit: Used to interface with external ECG monitors

ECG module: 3-lead ECG – works with standard ECG leads and electrodes

Bluetooth is a registered trademark of Bluetooth SIG, Inc.

Mac is a trademark of Apple Inc., registered in the U.S. and other countries.

DICOM is the registered trademark of the National Electrical Manufacturers Association for its standards publications relating to digital communications of medical information.

FUJIFILM
Value from Innovation

FUJIFILM SonoSite, Inc.
Worldwide Headquarters
21919 30th Drive SE, Bothell, WA 98021-3904
Tel: +1 (425) 951-1200 or +1 (877) 657-8050
Fax: +1 (425) 951-6800
www.sonosite.com/products/edgeii

SonoSite Worldwide Offices

FUJIFILM SonoSite Australasia Pty Ltd: Australia 1300-663-516
FUJIFILM SonoSite Australasia Pty Ltd: New Zealand 0800-888-204
FUJIFILM SonoSite Brazil . . . . . +55 11-5574-7747
FUJIFILM SonoSite Canada Inc. . . . . +1 888-554-5502
FUJIFILM (China) Investment Co., Ltd . . . . . +86 21-5010-6000
FUJIFILM SonoSite GmbH – Germany . . . . . +49 69-80-88-40-30
FUJIFILM SonoSite, Inc. – USA . . . . . +1 425-951-1200
FUJIFILM SonoSite India Pvt Ltd. . . . . +91 124-288-1100
FUJIFILM SonoSite Italy S.r.l. . . . . +39 02-9475-3655
FUJIFILM SonoSite Iberica SL – Spain . . . . . +34 91-123-84-51
FUJIFILM SonoSite Korea Ltd . . . . . +65 6380-5589
FUJIFILM SonoSite Ltd – United Kingdom . . . . . +44 1462-341151
FUJIFILM SonoSite SARL – France . . . . . +33 1-82-88-07-02

SONOSITE, the SONOSITE logo and EDGE II are trademarks and registered trademarks of FUJIFILM SonoSite, Inc. in various jurisdictions. FUJIFILM is a trademark and registered trademark of FUJIFILM Corporation in various jurisdictions. All other trademarks are the property of their respective owners. Copyright © 2016 FUJIFILM SonoSite, Inc. All rights reserved. Subject to change.

MKT02792 Rev D 10/2016

7112

EXERCISE MATS & WALL HANGERS TYPICAL



Body-Solid Hanging Foam Exercise Mat

The Body-Solid Tools Hanging Exercise Mat offers unmatched comfort and quality for yoga, stretching, low-impact and core-based exercises. Two reinforced eyelet rings allowing users to hang the BSTFM20 on a wall or door, saving space between workouts. Durable foam construction ensures the Body-Solid Tools Hanging Exercise Mat maintains both its shape and flatness over time while offering superior impact absorption and comfort. The non-slip surface is both water resistant and easy-to-clean, providing safety, stability and cleanliness to the BSTFM20 before, after and during all workouts.

- For use with yoga, stretching, low impact and core-based exercises
- Reinforced eyelets to hang mat on wall or door
- Quality foam construction offers durability and comfort
- Water-resistant & easy-to-clean non-slip surface
- Measures 71" x 23" x 3/8" Thick

SOURCE: https://www.fitnessfactory.com/item/6528/bstfmh/body-solid_foam_mat_wall_hanger/#sthash.lqHHXHuV.dpbs

7114

YOGA MAT-EXTRA THICK TO BE PLACED IN A BASKET WHEN ROLLED UP





YOGA MAT-WALMART ITEM #565342943

Mat measures 15 mm thick, which is almost 3/4 Inch. The mat's ridged texture creates a cooling, non-stick, moisture-resistant surface so you can work out with confidence. When not in use, each mat is easily rolled for storage. Best of all, the carrying handle makes it convenient to transport from home to the gym or yoga studio. This mat is great for absorbing impact, so it's a great source of body support and alignment during a workout. The non-slip bottom grips the floor, helping to prevent injuries. Perfect for gyms, schools, exercise classes and yoga studios, this ultra-thick foam mat can also serve as a sleeping pallet for camping trips or day care facilities. Available colors include black, red, blue and pink. Each mat measures 72 Inch long and 24 1/4 Inch wide.

- High-density foam mat measures almost 3/4 Inch
- Perfect for Pilates, Yoga and other floor exercises
- Ridged texture creates a non-stick, moisture-resistant surface for a comfortable workout

BASKET INFO:

Features: -Hand woven from burmese rattan. -Natural and sustainable product. Product Type: -Basket. Primary Material: -Wicker/Rattan. Nesting: -Yes. Size 31" x 25" x 14"

SOURCE FOR Crown Sporting Goods 3/4" Extra Thick Yoga Mat::

https://www.walmart.com/ip/Crown-Sporting-Goods-3-4-Extra-Thick-Yoga-Mat/40331748

SOURCE FOR BASKET: https://www.walmart.com/ip/Greyleigh-Albin-Rattan-Basket-with-Hoop-Handles/541453736?selected=true

3-tier Dumbbell Rack w/ Saddles

MG-A42



- Storage space for 15 pairs of pro-style dumbbells of any size
- Offset angle prevents wrist strain when removing and replacing dumbbells

FRAME	
Frame Finish	Proprietary two-coat powder process

TECH SPECS	
Overall Dimensions (L x W x H)	72 x 245 x 117 cm / 28.5” x 96.5” x 46”
Shipping Weight	113 kg / 250 lbs.

A7xi Ascent Trainer



- 41 cm / 16" capacitive touchscreen with FitTouch Technology offers intuitive operation
- WiFi connectivity accommodates integrated Matrix Asset Management system, plus optional Workout Tracking Network and Personal Trainer Portal
- xID single-point user sign-in offers a seamless personal experience
- Custom interface configuration through Matrix Asset Management facilitates personalized communication with users
- Advanced Sprint 8 High Intensity Interval Training program
- Integrated Virtual Active programming provides an immersive exercise experience
- Optimized app interface designed specifically for fitness offers easy access to social media and web content
- Compatible with IPTV
- RFID compatible to provide touch-free login
- Compatible with most smartphones and tablets for video, audio, charging and on-screen playlist selection
- Vista Clear Television Technology offers the most vibrant picture quality in the industry
- Integrated 3-speed personal fan
- Premium footpad insert enhances user comfort
- Adjustable incline and resistance for greater workout variety
- 51-61 cm / 20-24" adjustable stride length for increased range of motion
- 20-33 cm / 8-13” step-over height engages glutes, hamstrings and core stabilizer muscles
- Low 24 cm / 9.5" step-on height for easy accessibility
- Constant Rate of Acceleration and our patented suspension design delivers a perpetually smooth motion free of wheels and tracks
- Contralateral action with tapered, dual action handlebars mimics the body
- Ergo Form Grips with integrated controls enhance comfort and accessibility of key functions
- Removable disk for easy serviceability

CONSOLE	
Display Type	41 cm / 16″ class projective capacitive touchscreen LCD
Display Feedback	Time of Day, Time Elapsed, Time Remaining, Total Program Time, Distance (Kilometers or Miles), Calories, Calories per Hour, Level, Speed, Pace, Average Pace, Incline, RPM, Heart Rate, Peak Heart Rate, METs, Watts, Dynamic Profile Display, Static Profile Display
Secondary Data Display	Yes
User-defined Multi-language Display	English, German, French, Italian, Spanish, Dutch, Portuguese, Chinese (s), Chinese (t), Japanese, Korean, Swedish, Finnish, Russian, Arabic, Turkish, Polish, Welsh, Basque, Vietnamese, Somali, Danish
Resistance Range	1–25
Workouts	Manual, Rolling Hills, Target HR, Interval Training, Constant Watts, Fat Burn, Fitness Test, Random, Calorie Goal, Distance Goal, Time Goal, Sprint 8, Virtual Active
CSAFE Ready-FitLinxx™ Certified	Yes
IPTV Compatible	Yes
Pro:Idiom Compatible	Yes
FitTouch™ Technology	Yes
One-button Start	Yes

On-the-fly Program Change	Yes
Integrated Vista Clear™ Television Technology	Yes
FITCONNEXION™ Ready	No
WiFi Enabled	Yes
Bluetooth Enabled	Yes
Connects to Apple Watch	Yes
iPod® / iPhone® Compatible	Made for iPod, iPhone
Multimedia Playback	Compatible with most tablet and smartphone systems
Personal Fan	Yes
Personal Trainer Portal Compatible	Yes
USB Port	Yes
Virtual Active™ Compatible	Included
Asset Management Compatible	Included
Workout Tracking Network Compatible	Yes
Web Connectivity	Custom app interface in addition to web browser
Facility Communication Portal/Calendar	Programmed through Asset Management
RFID Compatible	Included

FEATURES	
Stride Length	53.3 cm / 21"
Incline Range	24% - 54% (15° range)
Step-on Height	24 cm / 9.5"
Contact & Telemetric HR	Yes
Footpad Insert	No
Pedal Spacing	6.4 cm / 2.5"
Handlebar Design	Multi-position dual action / custom ergo-bend stationary
Remote Buttons	Yes
Pause Function	Yes

FRAME	
Available Colors	Iced Silver or Matte Black

RESISTANCE SYSTEM	
Resistance System	Brushless generator

TECH SPECS	
Reading Rack	Yes
Power Requirements	Self-powered / powered 100v-240v - 50/60Hz AC
Minimum Watts	21 powered & self-powered
Minimum RPM	25 powered & self-powered
Assembled Dimensions	178 x 74 x 174cm / 70" x 29.2" x 68.5"
Max User Weight	182 kg / 400 lbs.
Assembled Weight	202.7 kg / 445 lbs.
Shipping Weight	216.5 kg / 476 lbs.

C7xi ClimbMill



- 41 cm / 16" capacitive touchscreen with FitTouch Technology offers intuitive operation
- WiFi connectivity accommodates integrated Matrix Asset Management system, plus optional Workout Tracking Network and Personal Trainer Portal
- xID single-point user sign-in offers a seamless personal experience
- Custom interface configuration through Matrix Asset Management facilitates personalized communication with users
- Landmarks program enables users to scale 21 of the most famous buildings and monuments around the world
- Integrated Virtual Active programming provides an immersive exercise experience
- Optimized app interface designed specifically for fitness offers easy access to social media and web content
- Compatible with IPTV
- RFID compatible to provide touch-free login
- Compatible with most smartphones and tablets for video, audio, charging and on-screen playlist selection
- Vista Clear Television Technology offers the most vibrant picture quality in the industry
- Integrated 3-speed personal fan
- 25.4 cm / 10in step depth accommodates a wide range of users, and color variations aid the user in proper foot placement
- Step positioning software ensures the steps will lock at the lowest possible point for easy entry and exit
- Control Zone features a sensor that stops the step rotation when triggered by an object or person
- Our exclusive Sweat Management System was designed to track sweat away from the user and critical components – prolonging the life of the product
- Ergo Form Grips with integrated controls enhance comfort and accessibility of key functions
- Step-up plate for easy accessibility
- Anti-rust design prevents corrosion, prolonging the life of the product
- Rear-locking and leveling castors allow easy placement within facility
- Removable side access panels for easy serviceability
- Oil-free ECB modular drive system for maintenance free performance and quiet operation
- EN ISO 20957-8 certified

CONSOLE	
Connects to Apple Watch	Yes
Display Type	41 cm / 16″ class projective capacitive touchscreen LCD
Display Feedback	Time of Day, Time Elapsed, Time Remaining, Total Program Time, Total Steps, Floors Climbed, Calories, Calories per Hour, Level, Speed, SPM, Average SPM, Heart Rate, Peak Heart Rate, METs, Watts, Dynamic Profile Display, Static Profile Display
Secondary Data Display	Yes
User-defined Multi-language Display	English, German, French, Italian, Spanish, Dutch, Portuguese, Chinese (s), Chinese (t), Japanese, Korean, Swedish, Finnish, Russian, Arabic, Turkish, Polish, Welsh, Basque, Vietnamese, Somali, Danish
Resistance Range	1-25
Workouts	Manual, Rolling Hills, Target HR, Interval Training, Fat Burn, Stepper Fitness Test, Time Goal, Calorie Goal, Floor Goal, Landmarks, Virtual Active
CSAFE Ready-FitLinxx™ Certified	Yes
IPTV Compatible	Yes

Pro:Idiom Compatible	Yes
FitTouch™ Technology	Yes
One-button Start	Yes
On-the-fly Program Change	Yes
Integrated Vista Clear™ Television Technology	Yes
FITCONNEXION™ Ready	No
WiFi Enabled	Yes
Bluetooth Enabled	Yes
iPod® / iPhone® / iPad® Compatible	Made for iPod, iPhone, iPad
Multimedia Playback	Compatible with most tablet and smartphone systems
Personal Fan	Yes
Personal Trainer Portal Compatible	Yes
USB Port	Yes
Virtual Active™ Compatible	Included
Asset Management Compatible	Included
Workout Tracking Network Compatible	Yes
Web Connectivity	Custom app interface in addition to web browser
Facility Communication Portal/Calendar	Programmed through Asset Management
RFID Compatible	Yes
Pause Function	Yes
Reading Rack	Yes

FEATURES	
Step Depth	25.4 cm / 10"
Step Height	20.31 cm / 8"
Contact & Telemetric HR	Yes
Delineated Steps	Yes
Handlebar Design	Optimized handrails with Ergo Form Grips
Remote Buttons	Yes
Control Zone	Yes
Auto-stop Function	Yes

FRAME	
Available Colors	Iced Silver or Matte Black

RESISTANCE SYSTEM	
Resistance Technology	ECB with Flywheel

TECH SPECS	
Power Requirements	100v-240v – 50/60Hz AC
Assembled Dimensions	165 x 85 x 212 cm / 65" x 40.3" (with cupholders) x 83.5"
Max User Weight	182 kg / 400 lbs.
Assembled Weight	171 kg / 377 lbs.

R7xi Recumbent Cycle



- 41 cm / 16" capacitive touchscreen with FitTouch Technology offers intuitive operation
- WiFi connectivity accommodates integrated Matrix Asset Management system, plus optional Workout Tracking Network and Personal Trainer Portal
- xID single-point user sign-in offers a seamless personal experience
- Custom interface configuration through Matrix Asset Management facilitates personalized communication with users
- Advanced Sprint 8 High Intensity Interval Training program
- Integrated Virtual Active programming provides an immersive exercise experience
- Optimized app interface designed specifically for fitness offers easy access to social media and web content
- Compatible with IPTV
- RFID compatible to provide touch-free login
- Compatible with most smartphones and tablets for video, audio, charging and on-screen playlist selection
- Vista Clear Television Technology offers the most vibrant picture quality in the industry
- Integrated 3-speed personal fan
- Ergo Form seat and back pad enhance comfort and support
- Intuitive one-hand adjustment fine-tunes seat position
- Step-thru entry for easy access

CONSOLE

Display Type	41 cm / 16″ class projective capacitive touchscreen LCD
Display Feedback	Time of Day, Time Elapsed, Time Remaining, Total Program Time, Distance (Kilometers or Miles), Calories, Calories per Hour, Level, Speed, Pace, Average Pace, RPM, Heart Rate, Peak Heart Rate, METs, Watts, Dynamic Profile Display, Static Profile Display
Secondary Data Display	Yes
User-defined Multi-language Display	English, German, French, Italian, Spanish, Dutch, Portuguese, Chinese (s), Chinese (t), Japanese, Korean, Swedish, Finnish, Russian, Arabic, Turkish, Polish, Welsh, Basque, Vietnamese, Somali, Danish
Resistance Range	30-Jan
Workouts	Manual, Rolling Hills, Target HR, Interval Training, Constant Watts, Fat Burn, Fitness Test, Calorie Goal, Distance Goal, Time Goal, Sprint 8, Virtual Active™
CSAFE Ready-FitLinxx™ Certified	Yes
IPTV Compatible	Yes
Pro:Idiom Compatible	Yes
FitTouch™ Technology	Yes
One-button Start	Yes
On-the-fly Program Change	Yes
Integrated Vista Clear™ Television Technology	Yes
FITCONNEXION™ Ready	No
WiFi Enabled	Yes

Bluetooth Enabled	Yes
Connects to Apple Watch	Yes
iPod® / iPhone® Compatible	Made for iPod, iPhone
Multimedia Playback	Compatible with most tablet and smartphone systems
Personal Fan	Yes
Personal Trainer Portal Compatible	Yes
USB Port	Yes
Virtual Active™ Compatible	Included
Asset Management Compatible	Included
Workout Tracking Network Compatible	Yes
Web Connectivity	Custom app interface in addition to web browser
Facility Communication Portal/Calendar	Programmed through Asset Management
RFID Compatible	Included

FEATURES	
Contact & Telemetric HR	Yes
Handlebar Design	Seat side and Front ergo bend
Integrated Arm Rests	Yes
Remote Resistance Controls	Yes
Bottle Holder	Yes
Pause Function	Yes

FRAME	
Available Colors	Iced Silver or Matte Black

RESISTANCE SYSTEM	
Resistance System	Brushless generator

TECH SPECS	
Reading Rack	Yes
Crank Design	Three piece with forged arms
Power Requirements	Self-powered / powered 100v-240v - 50/60Hz AC
Minimum Watts	4 powered / 10 self-powered
Minimum RPM	25 powered / 25 self-powered
Assembled Dimensions	150.3 x 65.4 x 140 / 59.2" x 25.7" x 55.1"
Max User Weight	182 kg / 400 lbs
Assembled Weight	89 kg / 196.3 lbs.
Shipping Weight	101.3 kg / 223.5 lbs.

MATRIX

T7xi Treadmill



- 48 cm / 19" capacitive touchscreen with FitTouch Technology offers intuitive operation
- WiFi connectivity accommodates integrated Matrix Asset Management system, plus optional Workout Tracking Network and Personal Trainer Portal
- xID single-point user sign-in offers a seamless personal experience
- Custom interface configuration through Matrix Asset Management facilitates personalized communication with users
- Advanced Sprint 8 High Intensity Interval Training program
- Integrated Virtual Active programming provides an immersive exercise experience
- Optimized app interface designed specifically for fitness offers easy access to social media and web content
- Compatible with IPTV
- RFID compatible to provide touch-free login
- Compatible with most smartphones and tablets for video, audio, charging and on-screen playlist selection
- Vista Clear Television Technology offers the most vibrant picture quality in the industry
- Integrated 3-speed personal fan
- Crossbar speed and incline controls make adjustments quick and easy
- Ultimate Deck System for superior performance and durability
- 56 cm / 22" wide belt provides an added sense of security and freedom
- Matrix 5.0 Hp AC motor with Dynamic Response Drive System fine-tunes response based on footfall pattern for a smooth, consistent, natural workout

CONSOLE

Display Type	48 cm / 19" class projective capacitive touchscreen LCD
Display Feedback	Time of Day, Time Elapsed, Time Remaining, Total Program Time, Distance (Kilometers or Miles), Calories, Calories per Hour, Speed, Pace, Average Pace, Elevation Gained, Incline, Heart Rate, Peak Heart Rate, METs, Watts, HD Dynamic Profile Display
Secondary Data Display	Yes
User-defined Multi-language Display	English, German, French, Italian, Spanish, Dutch, Portuguese, Chinese, Japanese, Korean, Swedish, Finnish, Russian, Arabic, Turkish, Polish, Welsh, Basque, Vietnamese, Somali, Danish
Workouts	Manual, Rolling Hills, Fat Burn, Sprint 8, Target HR (incline), Gerkin Protocol, Calorie Goal, Distance Goal, Time Goal, Army PFT, Navy PRT, Marine PFT, Air Force PRT, Physical Efficiency Battery (PEB), Virtual Active
CSAFE Ready-FitLinxx™ Certified	Yes
IPTV Compatible	Yes
Pro:Idiom Compatible	Yes
FitTouch™ Technology	Yes
One-button Start	Yes
On-the-fly Program Change	Yes
Integrated Vista Clear™ Television Technology	Yes
FITCONNEXION™ Ready	No
WiFi Enabled	Yes

Bluetooth Enabled	Yes
Connects to Apple Watch	Yes
iPod® / iPhone® Compatible	Made for iPod®, iPhone®
Multimedia Playback	Compatible with most tablet and smart phone systems
Personal Fan	Yes
Personal Trainer Portal Compatible	Yes
USB Port	Yes
Virtual Active™ Compatible	Included
Asset Management Compatible	Included
Workout Tracking Network Compatible	Yes
Web Connectivity	Custom app interface in addition to web browser
Facility Communication Portal/Calendar	Programmed through Asset Management
RFID Compatible	Included
Pause Function	Yes
Reading Rack	No

DRIVE SYSTEM	
Drive System	Matrix 5.0 hp AC Dynamic Response Drive System™

FEATURES	
Deck Type	Ultimate hard-wax reversible 1" deck
Belt Type	Habasit, 2-ply commercial grade
Running Area	152 x 56 cm / 60" x 22"
Step-on Height	24 cm / 9.5"
Cushion System	Ultimate Deck™ cushioning system
Incline Range	0-15% (590-kg / 1,300-lb. thrust elevation motor)
Speed Range	0.8 - 24.1 km/h / 0.5 - 15 mph
Contact & Telemetric HR	Yes
Crossbar Controls	Go, stop, cool down, speed and incline control
Tread Sense	Yes

FRAME	
Available Colors	Iced Silver or Matte Black

TECH SPECS	
Power Requirements	20-amp dedicated circuit required, non-looped grounded
Electrical Receptacle & Plug	NEMA 5-20R 120v
Assembled Dimensions	215 x 93 x 161 cm / 84.6" x 36.5" x 63.5"
Max User Weight	182 kg / 400 lbs.
Assembled Weight	181 kg / 399 lbs.
Shipping Weight	200 kg / 440 lbs.

U7xi Upright Cycle



- 41 cm / 16" capacitive touchscreen with FitTouch Technology offers intuitive operation
- WiFi connectivity accommodates integrated Matrix Asset Management system, plus optional Workout Tracking Network and Personal Trainer Portal
- xID single-point user sign-in offers a seamless personal experience
- Custom interface configuration through Matrix Asset Management facilitates personalized communication with users
- Advanced Sprint 8 High Intensity Interval Training program
- Integrated Virtual Active programming provides an immersive exercise experience
- Optimized app interface designed specifically for fitness offers easy access to social media and web content
- Compatible with IPTV
- RFID compatible to provide touch-free login
- Compatible with most smartphones and tablets for video, audio, charging and on-screen playlist selection
- Vista Clear Television Technology offers the most vibrant picture quality in the industry
- Integrated 3-speed personal fan
- Intuitive one-hand adjustment fine-tunes seat position
- Race-inspired handles provide a comfortable ride experience
- Step-thru entry for easy access

CONSOLE

Display Type	41 cm / 16″ class projective capacitive touchscreen LCD
Display Feedback	Time of Day, Time Elapsed, Time Remaining, Total Program Time, Distance (Kilometers or Miles), Calories, Calories per Hour, Level, Speed, Pace, Average Pace, RPM, Heart Rate, Peak Heart Rate, METs, Watts, Dynamic Profile Display, Static Profile Display
Secondary Data Display	Yes
User-defined Multi-language Display	English, German, French, Italian, Spanish, Dutch, Portuguese, Chinese (s), Chinese (t), Japanese, Korean, Swedish, Finnish, Russian, Arabic, Turkish, Polish, Welsh, Basque, Vietnamese, Somali, Danish
Resistance Range	30-Jan
Workouts	Manual, Rolling Hills, Target HR, Interval Training, Constant Watts, Fat Burn, Fitness Test, Calorie Goal, Distance Goal, Time Goal, Sprint 8, Virtual Active™
CSAFE Ready-FitLinxx™ Certified	Yes
IPTV Compatible	Yes
Pro:Idiom Compatible	Yes
FitTouch™ Technology	Yes
One-button Start	Yes
On-the-fly Program Change	Yes
Integrated Vista Clear™ Television Technology	Yes
FITCONNEXION™ Ready	No
WiFi Enabled	Yes

Bluetooth Enabled	Yes
Connects to Apple Watch	Yes
iPod® / iPhone® Compatible	Made for iPod, iPhone
Multimedia Playback	Compatible with most tablet and smartphone systems
Personal Fan	Yes
Personal Trainer Portal Compatible	Yes
USB Port	Yes
Virtual Active™ Compatible	Included
Asset Management Compatible	Included
Workout Tracking Network Compatible	Yes
Web Connectivity	Custom app interface in addition to web browser
Facility Communication Portal/Calendar	Programmed through Asset Management
RFID Compatible	Included

FEATURES	
Contact & Telemetric HR	Yes
Handlebar Design	Molded racing design with elbow support
Integrated Arm Rests	Yes
Remote Resistance Controls	Yes
Bottle Holder	Yes
Pause Function	Yes

FRAME	
Available Colors	Iced Silver or Matte Black

RESISTANCE SYSTEM	
Resistance System	Brushless generator

TECH SPECS	
Reading Rack	Yes
Crank Design	Three piece with forged arms
Power Requirements	Self-powered / powered 100v-240v - 50/60Hz AC
Minimum Watts	4 powered / 10 self-powered
Minimum RPM	25 powered / 25 self-powered
Assembled Dimensions	130.7 x 65.4 x 153.7 / 51.5" x 25.7" x 60.5"
Max User Weight	182 kg / 400 lbs
Assembled Weight	87.8 kg / 193.5 lbs.
Shipping Weight	102 kg / 224.9 lbs.

Flat Bench

G3-FW81



- Integrated foot supports for greater user stability
- Integrated wheels facilitate movement around facility
- Bench has 3-point contact for improved leveling

FRAME	
Over-sized Frame Tubing	Yes
Frame finish	Proprietary two-coat powder process
Frame Color	Iced Silver

TECH SPECS	
Total Weight	26 kg / 57 lbs.
Overall Dimensions	156.2 x 68.7 x 43.0 cm / 61.5” x 27.0” x 16.9”

MATRIX

Functional Trainer

G3-MSFT300/400



- 1:4 ratio for low starting resistance and high-speed movements
- Available with 290lb (MSFT300) or 390lb (MSFT400) stacks
- Swivelling accessory station accommodates more training handles and attachments
- Multi-grip position pull-up handles with unique rock climbing attachment
- Integrated foldaway step for easy access
- Includes 10 standard grips and attachments

EASE OF USE	
Color-coded Pivots & Adjusts	Yes
Instructional Placards	Yes
Bottle & Towel Holder	Yes
Ergo Form Cushions	No

FRAME	
Over-sized Frame Tubing	Yes
Frame Finish	Proprietary two-coat powder process
Frame Color	Iced Silver

TECH SPECS	
Total Weight Functional Trainer G3-MSFT 300	601 kg / 1324 lbs.
Weight Stack Functional Trainer G3-MSFT 300	2 x 131 kg / 2 x 290 lbs. (1:4 Ratio)
Effective Resistance G3-MSFT 300	32.9 kg / 72.5 lbs (per side)
Total Weight Functional Trainer G3-MSFT 400	697 kg / 1537 lbs.
Weight Stack Functional Trainer G3-MSFT 400	2 x 176 kg / 2 x 390 lbs. (1:4 Ratio)
Effective Resistance G3-MSFT 400	44.2 kg / 97.5 lbs (per side)
Overall Dimensions	169.2 x 130.2 x 234.4 cm / 66.6” x 51.2” x 92.3”
Cable Travel Length	457 cm / 15'

WEIGHT STACK	
Weight Pins	Magnetic & tethered
Guards & Pulleys Covers	Yes
Suspension	3-Point Design
Self-lubricating Weight Stack Bushings	Solid cold-rolled steel plate, with Teflon inner bushings.

MATRIX

Lat Pulldown / Seated Row

VS-S331



- Thigh pad easily adjusts to provide stability and comfort
- Elevated foot rests provide stability and comfort during heavy lifts
- Stainless-steel cable guides provide added protection for lasting durability
- Clearly indicated adjustments for ease of use

ADJUSTMENTS	
Color coded pivots & points of adjustment	Yes

FRAME & CABLES	
Frame color	Iced Silver
Frame finish	Proprietary two-coat powder process
Cable transmission	Internally lubricated cables & fittings
Machine anchoring	Machine anchoring locations

TECH SPECS	
Product Weight (Standard Stack)	246 kg / 543 lbs.
Product Weight (Heavy Stack)	278 kg / 613 lbs.
Overall Dimensions (L x W x H)	180.5 x 157.9 x 226.3 cm / 71.1” x 62.2” x 89.1”

USER AMENITIES	
Rear placards	Color-coded machine identification & machine specific stretching
Front placards	Muscle call outs, machine specific stretching, start & finish exercise illustrations, proper machine movements
Placard color coding	Yellow (upper body)
Contoured seat	Yes
Personal storage	Bottle holder, storage area and towel holder (towel holder on rep counter only)
Rep counter	Electronic counter displays reps, exercise time and rest time & provides towel holder hook
Foot Support	Foot support accommodates users of all sizes for additional lower body support

WARRANTY	
Frame and welds (not coatings)	10 years
Weight Stacks	5 years
Pulleys & Pivot Bearings	5 years
Other Items Not Specified	3 years
Labor	3 years
Upholstery/cables/grips/springs	1 year

Accessories	6 months
Air Filled Shock	90 days

WEIGHT STACK	
Weight stack guarding	Full front and rear shields
Incremental weight system	5 lbs (2.3 kg)
Standard Stack	72.6 kg / 160 lbs.
Heavy Stack	104.3 kg / 230 lbs.

Leg Press / Calf Press

VS-S70



- One-handed start adjustment for ease of use
- Air shock assisted foot platform provides smoother adjustments
- Assistance handle and low step over height for easy access
- Footplate identifies user foot position with unique visual indicators
- Incremental weight

ADJUSTMENTS	
Color coded pivots & points of adjustment	Yes
Range of Motion Adjustment	Gas Assisted Foot Platform Adjustment

FRAME & CABLES	
Frame finish	Proprietary two-coat powder process
Frame color	Iced Silver
Cable transmission	Internally lubricated cables & fittings
Machine anchoring	Machine anchoring locations

TECH SPECS	
Product Weight	361 kg / 795 lbs.
Overall dimensions	232.4 x 102.4 x 167.1 cm / 91.5” x 40.3” x 65.8”
Rep counter machine usage tracking	Service mode tracks total machine reps and hours of use
Rep counter battery life	Approximately 3 years
Rep counter power supply	2 AA batteries

USER AMENITIES	
Personal storage	Bottle holder, storage area and towel holder (Towel Holder on Rep Counter Only)
Rep counter	Electronic counter displays reps, exercise time and rest time & provides towel holder hook
Front placards	Muscle call outs, machine specific stretching, start & finish exercise illustrations, proper machine movements
Placard color coding	Blue (lower body)
Rear placards	Color-coded machine identification & machine specific stretching

WEIGHT STACK	
Weight stack guarding	Full front and rear shields
Weight plate increments	25 lbs (11 kg)
Incremental weight system	5 lbs (2.3 kg)
Consistent stack height	Yes

Total stack weight	415 lbs (188 kg)

MATRIX

MEGA Half Rack

MG-MR690



- Open-front design gives users freedom of movement
- As shown with adjustable safety bars, dual-grip chin bar, bar storage, band storage and weight storage
- J-hooks made of high-density polyethylene (HDPE) to protect bar knurling from scratches
- Visual height indicator and colored locking pin make bar-level changes quick and easy
- 3 retractable lower band pegs on each side (6 total)

FRAME	
Frame Construction	10.2 x 10.2 cm / 4” x 4” uprights are made of 7-gauge, laser-cut steel tubing
Frame Construction	Main frame is made of 10.2 x 7.6 cm / 4” x 3” steel tubing
Integrated Frame Components	2 sets of chin bars: 1 set of 3.2 cm / 1.25”; 1 set of 5.1 cm / 2” Fat Bar (both have neutral and pronated positions)
Integrated Frame Components	1 set of band hooks standard
Integrated Frame Components	2 additional chain-storage horns

STORAGE	
Weight	10 weight-storage horns capable of holding both Bumper and Olympic plates
Bar	1 bar-storage tube

TECH SPECS	
8' Overall Dimensions (L x W x H)	170.5 x 207 x 246.5 cm / 67” x 81.5” x 97”
9' Overall Dimensions (L x W x H)	171 x 207 x 277 cm / 67.5" x 81.5" 109"
8' Product Weight	259 kg / 570 lbs
9' Product Weight	282.1 kg / 622 lbs
Max. User Weight	181.5 kg / 400 lbs.
Max. Training Weight	408.5 kg / 900 lbs.

Multi-Adjustable Bench LP

MG-A82



- Seat automatically adjusts with the back pad for ease of use
- Adjustable back pad with 8 positions from 0 to 75 degrees
- Wide back pad stabilizes users during heavy lifts
- Molded guards protect high wear / scuff areas
- Transport handle and integrated wheels simplify movement within facility
- Low 46 cm / 17.8” floor-to-pad height minimizes lower back stress and prevents arching

TECH SPECS	
Overall Dimensions (L x W x H)	152 x 78 x 46 cm / 59.7” x 30.6” x 17.8”
Product Weight	55 kg / 121.5 lbs
Max User Weight	159 kg / 350 lbs
Max Training Weight	272 kg / 600 lbs.

WARRANTY	
Frame and welds (not coatings)	10 years
Weight Stacks	5 years
Pulleys & Pivot Bearings	5 years
Other Items Not Specified	3 years
Labor	3 years
Upholstery/cables/grips/springs	1 year
Accessories	6 months

MATRIX

Multi-Press

VS-S131



- Designed for easy entry and exit
- Dual-position hand grips allow for greater training variety
- Elevated foot rests provide stability and comfort during heavy lifts
- Reclined position offers greater lumbar support
- Smoothly transition between exercises with one simple adjustment
- Clearly indicated adjustments for ease of use

ADJUSTMENTS	
Color coded pivots & points of adjustment	Yes
User adjustment range	3 user start options

FRAME & CABLES	
Frame color	Iced Silver
Frame finish	Proprietary two-coat powder process
Cable transmission	Internally lubricated cables & fittings
Machine anchoring	Machine anchoring locations

TECH SPECS	
Product Weight (Standard Stack)	236 kg / 520 lbs.
Product Weight (Heavy Stack)	268 kg / 590 lbs.
Overall Dimensions (L x W x H)	154.3 x 157.2 x 199.9 cm / 60.7” x 61.9” x 78.7”

USER AMENITIES	
Rear placards	Color-coded machine identification & machine specific stretching
Front placards	Muscle call outs, machine specific stretching, start & finish exercise illustrations, proper machine movements
Placard color coding	Yellow (upper body)
Contoured seat	Yes
Personal storage	Bottle holder, storage area and towel holder (towel holder on rep counter only)
Rep counter	Electronic counter displays reps, exercise time and rest time & provides towel holder hook
Foot Support	Foot support accommodates users of all sizes for additional lower body support

WARRANTY	
Frame and welds (not coatings)	10 years
Weight Stacks	5 years
Pulleys & Pivot Bearings	5 years
Other Items Not Specified	3 years

Labor	3 years
Upholstery/cables/grips/springs	1 year
Accessories	6 months
Air Filled Shock	90 days

WEIGHT STACK	
Consistent stack height	Yes
Weight stack guarding	Full front and rear shields
Incremental weight system	5 lbs (2.3 kg)
Standard Stack	72.6 kg / 160 lbs.
Heavy Stack	104.3 kg / 230 lbs.

Utility Bench

G3-FW84



- Back angle is 85 degrees, improving comfort and stability for overhead movements
- Integrated foot supports increase stability
- Integrated wheels facilitate movement around facility

FRAME	
Frame Color	Iced Silver
Frame finish	Proprietary two-coat powder process
Over-sized Frame Tubing	Yes

TECH SPECS	
Shipping Weight	32 kg / 71 lbs.
Product Weight	27 kg / 60 lbs.
Overall Dimensions	118.9 x 75.9 x 96.2 cm / 46.8” x 29.9” x 37.9”

Olympic Decline Bench

G3FW15



- Bench is angled at 15 degrees for effective muscle stimulation
- Three take-off positions provide adaptability for users with varying arm lengths
- Tibia adjuster allows for near-infinite adjustment positions

FRAME & BELT	
Frame Color	Iced Silver
Over-sized Frame Tubing	Yes
Frame finish	Proprietary two-coat powder process

TECH SPECS	
Overall Dimensions (L x W x H)	211 x 159 x 127 cm / 83” x 63” x 50”
Total Weight	90 kg / 198 lbs.
Shipping Weight	108 kg / 238 lbs.

7316

OXYGEN FLOWMETER

CHEMETRON



Timeter Oxygen flowmeter 0-15 lpm w/Chemetron adapter

SKU#: 607-15002-03

-

The Timeter Soft-Touch flowmeter is durable, long-lasting and easy to maintain. Brass body for more durability. 5 years warranty. Manufactured by Allied Healthcare Products, Timeter Safe Grip.

NSN: 6680-01-253-0290.

• Flowmeter hood is made of crack-resistant polycarbonate

• Easier readability on the 0-5 Lpm range

• The dual tapered metering tube provides outstanding accuracy

• Steel float eliminates sticking caused by static electricity

• The nickel-plated solid brass body provides high durability and long life

• Larger, easier to grip Soft-Touch knob • Color coded for air or oxygen

SOURCE: https://www.lifemedicalsupplier.com/timeter-o2-flowmeter-chemetron-male-quick-connector.html

7317

CHEMETRON VACUUM REGULATORL TYPICAL



SKU: GT881VR300CHA

REGULATOR,SUCTION,CONT/INT,CHEMTRON

Continuous / Intermittent Suction Regulators

REGULATOR, SUCTION, CONT / INT, CHEMTRON

- Medline Gentec Suction Regulators feature antimicrobial additives in the rotary knobs and switches*.
- Extremely durable, with a full 10-year manufacturer's warranty.
- Available MRI conditional (can be used near MRI equipment; a minimum distance of only 1 ft. is required).
- They feature large user-friendly mode selector switches and a 1.25" (3.2 cm)diameter adjustment knob, easy-to-read numbers, a large 2.5" (64.cm) diameter gauge with glow-in-the dark scale and arrow.
- Color-coding available to help facilities manage inventory and allocation across different departments(color must be specified in sales notes).
- Available with ranges 0-300 mmHg or 0-160 mmHG .
- Settings include continuous, off and intermittent.
- Factory default settings for on/off cycles are 16 seconds (+/- 2) on, 8 seconds (+/- 2) off; on/off settings can be adjusted without opening the case (controls are not accessible without tools).

Specifications

Adapter Type	Chemetron Adapter
Bottom Fitting	None
Connector Type	No Bottom Fitting
HPIS Code	680_330_60_0
Latex Free	Yes
Suction	Continuous/Intermittent
UNSPSC	42271707
mmHg	0-160

SOURCE:
https://www.medline.com/sku/item/MDPGT881VR160CHA;ecomsessionid=Ce0lqWctHREG15v4yJSO8SjBUangKK50oIE4yoKW.OC4-b2b?skuIndex=S2&question=&flowType=&indexCount=

7318

MOBILE OXYGEN TANK KIT

E Oxygen Cylinder Kit on Cart



Product #: 1630AE

DESCRIPTION:

1602E Aluminum Oxygen Cylinder, 1335 adj. flow reg. (2 - 8 LPM), nasal cannula, 370C cart (Empty)

Approximate Size: 10”w x 10”d x 32”h

SOURCE: https://www.madamedical.com/category/oxygen-kits/product/1630AE

Clearing The Airway Is Our #1 Priority

OPERATING INSTRUCTIONS AND MAINTENANCE MANUAL



SSCOR Duet®
Model 2314 Series
AC Suction with Battery Back-up

SSCOR, INC.
11064 Randall Street • Sun Valley, CA 91352 • USA
Telephone +1-818-504-4054 • 800-434-5211
Fax +1-818-504-6032
www.sscor.com
Email: info@sscor.com
techsupport@sscor.com

INTERTEK ISO 13485:2003

CE 0413

Rev.R (03/14)

Caution-Notice

1. SSCOR suction units are not designed or intended for use in extended procedures that require prolonged high vacuum/low airflow applications, as is the case in wound drainage or endoscopic use or in any other procedure that produces high vacuum levels within an occluded system for an extended period of time. Turn the suction unit off when it is not in use.

2. Federal law restricts this device to sale, distribution, and use by, or on the order of a physician, emergency medical technician, or other medical practitioner. For use by medical personnel trained in suctioning techniques and in the use of medical suction equipment.

3. Operator should be thoroughly familiar with these operating instructions before this device is used.

4. Do not use in the presence of flammable agents or anesthetics.

5. Before testing for vacuum over -300mmHg look for an expiration date on the canister (where applicable) and change the canister if the canister has passed the expiration date to minimize the possibility of implosion, which can occur when a canister is aged or damaged.

6. External equipment intended for connection to signal input, signal output or other connectors, shall comply with relevant IEC standard (e.g. IEC 60950 for IT equipment and the IEC 60601 series for medical electrical equipment). In addition, all such combinations –systems – shall comply with the standard IEC 60601-1-1, safety requirements for medical electrical systems. Equipment not complying with IEC 60601 shall be kept outside the patient environment, as defined in the standard.
   Any person who connects external equipment to signal input, signal output or other connectors has formed a system and is therefore responsible for the system to comply with the requirements of IEC 60601-1-1. If in doubt, contact qualified technician or your local representative.

7. A blinking LED on the control panel indicates low battery capacity. This means the battery has been subjected to irreparable damage. REPLACE THE BATTERY!

8. Where the integrity of the external protective earth conductor arrangement (ground) is in doubt, the unit shall be operated from its internal electrical power source (battery only). Grounding reliability can only be achieved when connected to an equivalent receptacle marked “Hospital Only” or “Hospital Grade”

©2014 Duet, HI-D and Big Stick are registered trademarks of SSCOR, Inc.

Table of Contents

Caution-Notice 2
General Description 3
Warranty 3
Description of Symbols 4
Getting Acquainted 5
Battery Test & Trouble Shooting 6
General Specification 7
Internal Access for Electrical and Pneumatics 8
Maintenance, Sanitation and Disenfection Instructions 9
Retention Bracket Mounting Instructions 10
Declaration of Conformity 11

General Description

SSCOR suction units are designed for hospital crash carts, patient transport and emergency medical service. Battery condition is automatically monitored and visualized by indicator lights on the control panel. The battery should be charged to a dependable working charge in 6 to 8 hours when connected to the charging source. Suction power can be regulated when full power may be considered harmful to the patient. SSCOR suction units are designed to provide instant, effective suctioning, independent of external sources of power and can be pre-set to be activated immediately upon reaching the distressed patient. All controls are clearly labeled and easily accessible.

The SSCOR Duet is a portable, 100V-240V AC constant suction device, with a 12V DC battery back-up. The battery is charged by an internal, DC dual mode battery charger. The charger monitors the battery, charges the battery only when necessary, shuts down the unit if the battery is low and signals battery condition. A fully charged battery at full capacity will power the unit for 45 minutes (±10%).

Warranty

SSCOR warrants that each new product is free from defects in material and workmanship under normal use and service for a period of one year from date of purchase. This warranty gives you specific legal rights and you may also have other rights that vary from jurisdiction to jurisdiction. For countries where minimum warranty terms are determined by statute, the warranty term is the longer of the statutory period or the term listed above.
Batteries, disposable items including collection canisters, patient tubing and catheters are excluded from this warranty.
See the SSCOR Warranty for terms and conditions, available on www.sscor.com

Model 2314 Series Battery Replacement Policy

SSCOR will replace any SSCOR Duet battery which fails to operate the pump to specifications for a period of three years from the date of purchase. Verify the condition of the battery per the battery test on Page 6 in this Operations Manual.

Description of Symbols

Symbol	Location	Meaning
	Serialized Label	Type B Equipment
	Serialized Label	Separate Collection for Electronic Equipment
	Serialized Label	Attention - Consult Accompanying Documents
	Shipping Carton	Manufacturer
	Shipping Carton	Date of Manufacture
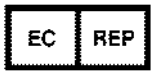	Shipping Carton	Authorized Representative in the European Community
	Control Panel	Power Source Connected
	Control Panel	Pump is On
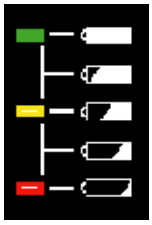	Control Panel	Battery Level of Charge Green LED = Full Green / Yellow LED = High Yellow LED = Half Yellow / Red LED = Low Red LED = Battery Depleted Put unit back on charge
	Control Panel	Push On / Push Off
	Serialized Label	Class II Equipment Double Insulated
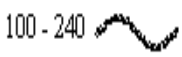	Serialized Label	Alternating Current (100-240V AC)

Getting Acquainted

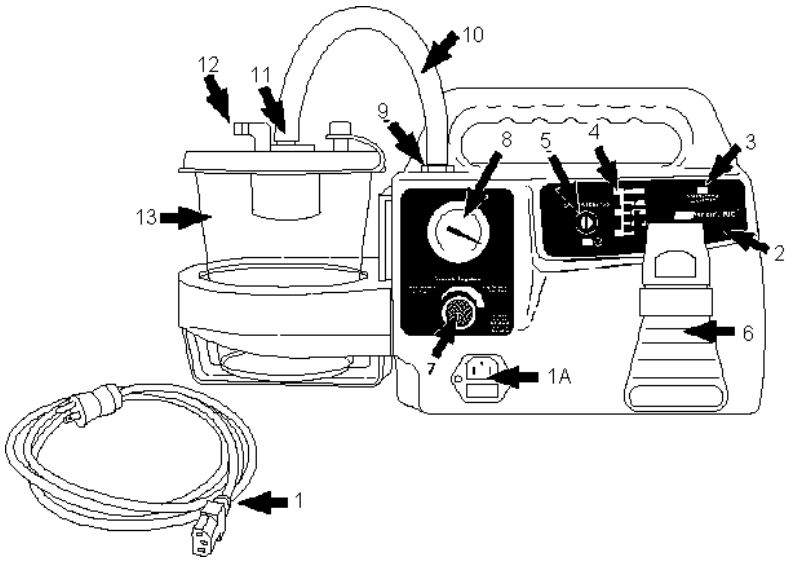

Running the unit and Charging the Internal Battery from AC Power

1. Connect the female plug on the AC power cord (1) to the AC receptacle on the device (1A).
2. Connect the male plug on the AC power cord (1) to a grounded wall receptacle.
3. Check the control panel (2). The “power source connected” orange LED (3) indicates a good connection to the AC power source and indicates the battery is charging. The battery condition indicators (4) show the charge level of the battery (See Description of Symbols page 4).
4. Press the ON/OFF switch (5) on the control panel to start the vacuum pump.

Running the unit from DC power

1. Disconnect the power cord (1) and press the ON/OFF switch (5) on the control panel to start the vacuum pump.
2. Check battery condition indicators (4)

Adjusting the vacuum level

1. Occlude the patient tube and turn the vacuum regulator (7) clockwise to the stop.
2. Observe gauge (located above the vacuum regulator). The vacuum reading should rise to -300mmHg from zero in 3 seconds. It should max out at approximately >= -525mmHg. Lower levels of negative pressure will be observed at altitude.
3. Adjust the vacuum reading to your desired level. If the vacuum does not meet or exceed -525mmHg, check for a leak in the system i.e. tubing, barb connections or loose canister lid. Refer internal vacuum problems to qualified personnel. After using the device, reconnect the unit to the charging source; check the power source connected LED (3).

Charging the Battery Using the 8323 Charging / Retention Bracket Model 2314BV -230 Only): Hard wire the Model 8323 Charging / Retention Bracket to the hot DC circuit (in front of the master switch). Make certain the circuit is properly fused according to appropriate vehicle standards. The vehicle electrical system will furnish power to both run the pump and charge the battery. See page 10 for additional information.

BATTERY TEST

Run the following test whenever poor battery quality is suspected to ensure proper performance of the device

1. Check that the power source connected LED on the control panel (3) and the green battery condition LED are lit.
2. Remove the power cord and run the unit from its internal DC battery.
3. Check for vacuum by occluding the patient tube and set the vacuum regulator (7) to the maximum vacuum setting.
4. Observe the regulator gauge (8). The vacuum reading should rise to -300mmHg from zero in less than 3 seconds. It should max out at >= -525mmHg. Un-occlude the patient tubing.
5. Allow the unit to run for 15 minutes on DC power. If the unit stops or slows during the 15 minutes, or if the battery condition indicators (4) begin to blink, it is possible the battery capacity has been depleted. It is time to replace the battery.
6. If the unit is still running at full power after 15 minutes, adjust the regulator to the desired setting, turn the device off and put it back on charge.

SSCOR recommends replacement of the battery after 3 years.

Trouble Shooting

WARNING: DO NOT ATTEMPT TO SERVICE THIS EQUIPMENT
IF YOU ARE NOT A QUALIFIED MEDICAL REPAIR TECHNICIAN

Problem	Possible Cause	Corrective Action
Power Source Connected LED not lit.	Fuse blown	Replace fuse in power supply, input receptacle, or wiring harness.
	Molex connections disconnected	Open unit and check to see Molex connections are secure.
	Power cord disconnected	Reconnect cord.
Does not function when switch is turned on	Battery discharged	Reconnect to charging source
	Molex connections disconnected.	Open unit and check to see Molex connections are secure.
Blinking LED	Low battery capacity	Replace battery.
No suction when pump is running	Vacuum line (10) loose	Tighten vacuum line
	Canister (13) defective	Replace canister
	Canister lid (13) loose	Tighten canister lid
	Catheter thumb vent is open	Occlude thumb vent
	Debris has collected in the pump	Refer to maintenance section

General Specifications

CHARACTERISTICS	SPECIFICATIONS
Size	17"L x 9"H x 5.25"W (43.18cm L x 22.86cm H x 13.33cm W)
Weight	10.15 lbs/4.6 kgs Device only
Vacuum Pump	12V DC oil-less diaphragm. Clinical Airflow >= 30LPM
Variable Regulator (7)	Controls negative pressure
Gauge (8)	Calibrated in mmHg. Color-coded.
Power Source: Battery (DC Power)	Rechargeable Sealed Lead Acid. SSCOR part # 80635
Medical Switcher (AC Power)	100V-240VAC, 47-63Hz Uses 1ea. 3A 250V fast acting fuse
Switch (5) -	Off/Standby/On membrane switch
AC receptacle (1A)	Uses (2) 2.5A 250V fast acting fuses
Collection Canister (13)	1200cc/ml SSCOR part #48041
Patient tubing	Vinyl tubing 9/32”ID x 72”L (7.1mm ID x 182.88 cm L) SSCOR part #43200
Suction Tip	HI-D® “Big Stick®” SSCOR part #44241C



Internal Access for Electrical and Pneumatics

WARNING: DO NOT ATTEMPT TO SERVICE THIS EQUIPMENT IF YOU ARE NOT A QUALIFIED MEDICAL REPAIR TECHNICIAN

To open or close the unit, first remove the canister holder:
Remove the set screws on the canister bracket.
Lift the canister holder up and out of the main chassis.

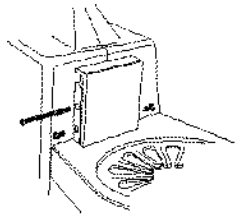

The clamshell design enables access to internal components. All 6-32 phillips head fastening screws are located in back of the unit.

REMOVE MAIN CHASSIS SCREWS

(A) 1 screw under the canister holder
(B) 2 screws in the back of the handle
(B) 3 screws in the back of the main chassis.
(C) It should not be necessary to open the exhaust door unless fluids have entered the system

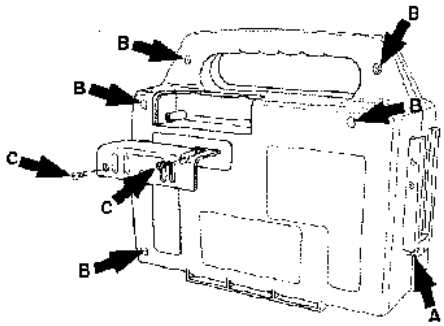

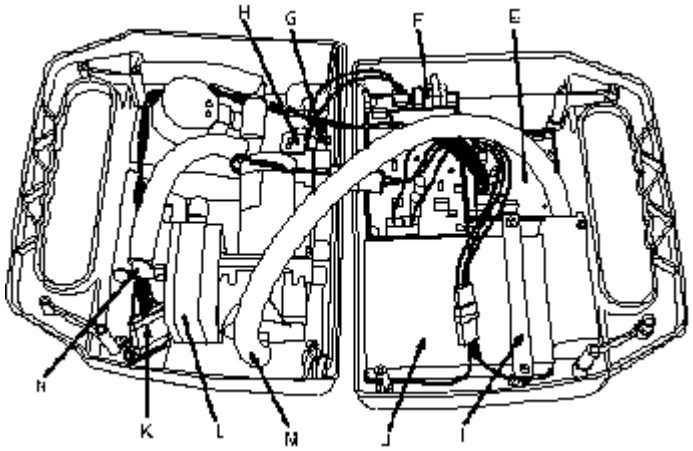

(E) PC Board-Electrical Circuits (Internal Dual Mode Battery Charger). Do not attempt to service the PC Board. Return to SSCOR or authorized service center for service.
(F) Power Supply. Do not attempt to service the Power Supply. Return to SSCOR or authorized service center for service.
(G) Functional ground.
(H) AC receptacle. Two 250V-2.5A fuses are in the receptacle fuse drawer.
(I) Battery Bracket
(J) Battery, 12V, Sealed Lead Acid
(K) Wiring connection to the control panel
(L) Vacuum pump. Return to SSCOR or authorized service center for service. Do not attempt to service the vacuum pump.
(M) Exhaust barb
(N) Vacuum barb

Maintenance

Preventive Care

Observe the following maintenance routine to ensure readiness at any time:

1. When the SSCOR aspirator is not in use, keep batteries on continuous charge.
2. Test the SSCOR aspirator at regular intervals; See page 6.
3. Make sure the SSCOR aspirator is always clean and ready for use.
4. If the procedure produced an excessive quantity of fluids, check the vacuum line (7) for evidence of moisture. If the vacuum line between the pump and canister is moist, it is possible that fluids have reached the vacuum pump. See Disinfection Instructions below.
5. For technical assistance, call (800) 434-5211 or international +1 818-504-4054.

Note: No part requires lubrication and lubricants should not be used.

Sanitation

As soon as possible after use, the single use disposable canister, patient tubing and catheter should be discarded according to local / regional / national requirements for the disposal of hazardous waste materials. Clean using a mild detergent and if necessary disinfect with a mild disinfectant such as 10 to 1 bleach and rinse using clear water to remove any residue.

If the exhaust filter is soiled, remove the two screws holding the filter door in place (see page 8), remove the soiled filter and replace with new filter (SSCOR part number 90160).

Do not reuse any single use disposable parts; do not submerge the device into any liquid, this will void the warranty and cause the device to malfunction.

Disinfection

Use personal protective equipment such as gloves, a smock, and face and eye protection when handling units that are suspected to be contaminated. **Caution:** Disconnect the unit from any power source prior to cleaning the unit. When cleaning the interior of the chassis, disconnect the battery from the PC Board to prevent damaging the PC Board.

Part	Cleaning and Disinfecting
Collection Canister	Disposable item, re-use not permitted. Use new canister for each patient.
Patient Tubing	Disposable item, re-use not permitted. Use new patient tubing for each patient.
HI-D® Stick	Disposable item, re-use not permitted. Use new HI-D Stick for each patient.
Vacuum Pump	Wipe with damp cloth or disinfectant wipe. Sterilizationnot permitted. Vacuum pump should be replaced if contaminated.
PC Board	Sterilization not permitted. PC Board should be replaced if contaminated.
Plastic Chassis	Wipe with damp cloth or disinfectant wipe. Sterilization not permitted.

Retention Bracket Mounting Instructions SSCOR Duet®

If you purchased the Model 2314B and intend to mount the device to the side of a crash cart, see the instructions below:

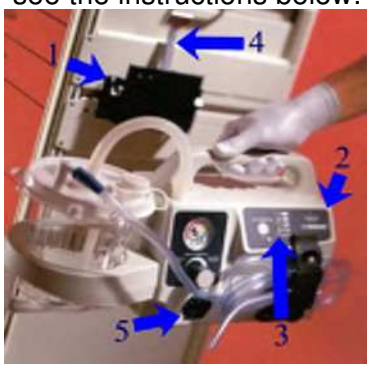

Mount the retention bracket to a suitable safe mounting surface using the four holes on the side of the shelf (1). Mount the retention bracket so the Duet suction unit can be released from the bracket easily and there is enough room to work the handle (4). The control panel (2) should be easily viewed and the battery condition LED's (3) visible when the unit (5) is connected to a grounded hospital receptacle. When placing the suction unit into the retention bracket, be sure the unit snaps into the bracket and is securely held in place.

Model 2314BV-230 Charging/Retention Bracket Mounting Instructions

If you purchased the Model 2314BV-230 and intend to mount the device to the action area inside a vehicle, see the instructions below:

The Model 8323 Charging/Retention bracket can be mounted by the base or mounted vertically in order to hold the SSCOR Duet portable suction unit. Mount the retention bracket to a suitable safe mounting surface so the indicator lights on the control panel are visible to the user. The unit is shipped ready to be mounted vertically, but if that does not fit your requirements, you can easily modify the unit to mount it by the base. Note: the mounting bracket will hold the Duet in place to a force of 10G. Select and prepare a mounting surface, and take care in the mounting procedure, so the bracket and pump will be secure at a force equal to, or greater than, 10G.

Vertical Mount

Remove the four ¼-20 x 1-1/2" hex head screws from hardware packet. Mark the hole placement for a vertical mount and use a 5/16"drill to drill the holes. Coat the screws with Loctite (not supplied) before securing the Charging/Retention Bracket. Put the four 1-1/2" screws through the holes in the charging bracket (Model 8323). Reattach the washers and nuts to the screws to secure the Charging/Retention bracket in place.

Base Mount (part #8314-7)

Mark the hole placement for a base mount and use a 5/16" drill to drill the holes. Remove the hardware from the hardware packet. Coat the screws with Loctite (not supplied) and place the screws through the bottom of the Bracket, Retention - Counter Mount (#8314-7) and through the holes you have drilled. Reattach the washers and nuts to secure the Bracket, Retention - Counter Mount (#8314-7) in place.

Mount the charging bracket (Model 8323) to the base mount (#8314-7) using the hardware in the hardware packet. Coat the screws with Loctite (not supplied) before securing the Charging/Retention Bracket to the base mount bracket (#8314-7).

Electrical(MODEL 8323 ONLY)

Hard wire the Charging / Retention Bracket to the DC Electrical System of the vehicle in front of the master switch. Make certain that the circuit is properly fused according to appropriate vehicle standards.

DECLARATION OF CONFORMITY

SSCOR, Incorporated
11064 Randall Street
Sun Valley, CA 91352
United States of America
Tel: +1 (818) 504-4054
Fax: +1 (818) 504-6032

Type of Equipment: **Portable Powered Suction Pump**

Model Name and Type: **SSCOR Quickdraw ® Model 2400 Series**
SSCOR Duet® Model 2314 Series
SSCOR VX-2® Model 2310 Series
SSCOR EVX™ Model 2309 Series

We herewith declare that the above mentioned product meets with the following requirements of the EC Directive concerning Medical Devices – 93/42/EEC and the Swedish regulation LVFS 2003:11

Safety:	**IEC/EN 60601-1: 1990 With A1 & A12:1993, A2:1995 & A13:1996**
EMC:	**IEC/EN 60601-1-2: 2001**
Safety Requirements - Medical Suction Unit	**ISO 10079-1**
Medical Vehicles and their Equipment	**EN 1789: 1999**
Degrees of Protection Provided by Enclosure	**IPX4**
Classification	**Class IIa**
Rules of Classification	**Annex IX, Rule 11**
Annex used for CE Declaration	**Annex V & Annex VI**
Notified Body	**INTERTEK SEMKO, AB**

Signature, Date: December 12, 2013
Name:
Title:

Authorized European Representative
Emergo Europe
Molenstraat 15
2513 BH, The Hague
The Netherlands
Tel: (+31) 70 345 8570
Fax: (+31) 70 346 7299

ReVel® ventilator specifications

Transport ventilation

7325

Certified Airworthiness Release (AWR) for compliance with military transport aircraft

Breath types	Volume control, pressure control, pressure regulated volume control (PRVC), pressure regulated volume support (PRVS), pressure support (PS), spontaneous
Breath modes	Assist control, synchronized intermittent mandatory ventilation (SIMV), continuous positive airway pressure (CPAP) plus PS, noninvasive positive pressure ventilation (NPPV), apnea backup

Physical dimensions	
Size	11.3" *(h)* x 7.1" *(w)* x 3.3" *(d)* *(28.7 cm x 18.0 cm x 8.4 cm)*
Weight	9.5 lb *(4.3 kg)*

Maneuver	
Maneuver	**Function**
Expiratory hold	0–6 sec
Inspiratory hold	0–6 sec

PTM patient and ventilator data	
Waveform	PTM display only
Loop	PTM display only
Trending	24-hr trend of all patient monitors

Maneuver monitor	
Monitor	**Range**
Auto positive end-expiratory pressure (PEEP)	0–99 cmH_2O
Delta pressure (dPaw)	1–99 cmH_2O
Expiratory pressure (Pexp)	0–100 cmH_2O
Plateau pressure (Pplat)	1–99 cmH_2O
Static lung compliance (Cstatic)	1–999 mL/cmH_2O



LED display	
Display type	12 5x7 dot matrix
Resolution	49 bicolor manometer
Viewable size	7 segment

CareFusion

Control setting	
Control	**Range**
Bias flow	3–10 LPM
Breath rate	1–80 BPM
Breath type	Volume Control, Pressure Control, PRVC
Flow termination	10–40% of peak flow
High pressure alarm delay	0, 1, 2 breaths
Inspiratory time	0.3–9.9 sec
Leak comp	On, Off
LPP alarm control	All Breaths, Control Only
NPPV	On, Off
O_2%	LPS, 21–100
PEEP	0–20 cmH_2O
Pressure control	1–99 cmH_2O
PS	Off, 1–60 cmH_2O
Pressure trigger	1–20 below PEEP
Pressure control flow termination	On, Off
Rise time	**Rise time setting** / **Commanded rise time *(sec)*** 1 / 0.100 2 / 0.133 3 / 0.178 4 / 0.237 5 / 0.316 6 / 0.422 7 / 0.562 8 / 0.750 9 / 1.000
Safety valve delta pressure	5–30 cmH_2O
Flow sensitivity	P, 1–9 LPM
Tidal volume	50–2,000 mL
Time termination	0.3–3 sec
Ventilation mode	Assist/Control (A/C), SIMV, CPAP plus PS
SBT O_2%	LPS, 21–100
SBT PEEP	0–20 cmH_2O

Control setting *(continued)*	7325
Control	**Range**
SBT PS	"- -" *(off)*, 1–30 cmH_2O
SBT time	15–120 min
SBT f/Vt display	"On," "Off"

Roll stand	
Physical dimension	
Height	40.9" *(103.9 cm)*
Weight	52 lb *(23.6 kg)*
Wheels	5 casters *(2 lockable)*
Ground clearance	2.75" *(7 cm)*

Adjustable alarm	
Alarm	**Range**
Apnea *(interval)*	10–60 sec
High pres	5–100 cmH_2O
High f	1–120 BPM, or "- -" *(off)*
High PEEP	3–40 cmH_2O, or "- -" *(off)*
High pulse	18–299 BPM, or "- -" *(off)*
High SpO_2	80–99%, or "- -" *(off)*
Low FiO_2	"- -" *(off)*, or 18–95%
Low min vol	"- -" *(off)*, or 0.1–99 L
Low pk pres	"- -" *(off)*, or 1–60 cmH_2O
Low PEEP	"- -" *(off)*, or 1–20 cmH_2O
Low pulse	"- -"*(off)*, or 19–300 BPM
Low SpO_2	"- -"*(off)*, or 60–99%
SBT > f	15–80 BPM, or SBT Hi f off
SBT > f/Vt	70–900 BPM/L, or Hi f/Vt off
SBT < f	SBT Lo f off, or 1–40 BPM
SBT < f/Vt	Lo f/Vt off, or 5–90 BPM/L
SBT Hi PEEP	3–40 cmH_2O, or "- -" *(off)*
SBT Lo PEEP	"- -" *(off)*, or 1–20 cmH_2O

Alarm system	
Audible volume	45–85 dBA

Procedure	
Procedure	**Function**
O_2 flush	Delivers a pre-selected increase in O_2 percentage for a pre-selected duration
Nebulization	Provides a flow of 6 LPM ± 10% O_2 to drive a nebulizer *(optional);* configurable as continuous or inspiration only
Spontaneous breathing trial (SBT)	During the SBT procedure, delivers ventilation in CPAP +PS mode with the selected SBT control settings in Extended Features; calculates f/Vt

Power		
Input voltage		
11–16 VDC		
Removable battery pack		
Type	Lithium-ion	
Duration	4-hr internal battery *(hot swappable)*	
Feature/spec.	**Detail**	
Electrical	Nominal voltage output	10.8 VDC
	Nominal capacity	5,800 mAH *(at 1C rate)*, min
	Charge rating	12.3 VDC, 2.0 A max
Charge time	Transition battery is fully recharged within 5 hr	
	Removable battery pack can be recharged within 8 hr	

Environmental	
Storage	
Temperature	-4 to 140 °F *(-20–60 °C)*
Humidity	5 to 95% relative, non-condensing
Operating	
Temperature	32–104 °F *(0–40 °C)*
Humidity	5–95% relative, non-condensing
Altitude	
Storage	50,000' max *(11.6 kPa)*
Operating	-2,300 to 10,600' *(68–110 kPa)*

Device monitor **7325**	
Monitor	**Range**
Measured Leak	0–30 LPM
O_2 Source Pressure	2–99.9 psi
Peak Expiratory Flow	0–190 LPM
Removable Battery Capacity Remaining	0–120%
Vent Usage Meter, non resettable	0–500,000 hr
Vent Usage Meter, resettable	0–500,000 hr

Patient monitor	
Monitor	**Range**
Airway Pressure (Paw)	-6 to +90 cmH_2O measured at the patient wye
Exhaled Minute Volume (VE)	0–99.9 L
Exhaled Tidal Volume (Vte)	0–4,000 mL
Fraction of Inspired Oxygen (FiO_2)	12–103% O_2
I:E Ratio, Calculated (IEcalc)	1:99–4.0:1
I:E Ratio, Measured	1:99–45:1
Mean Airway Pressure (MAP)	0–99 cmH_2O
Peak Inspiratory Flow	3–190 LPM measured at the patient wye
Peak Inspiratory Flow, Calculated	10–120 LPM
Peak Inspiratory Pressure (PIP)	0–120 cmH_2O, or hPa
PEEP	0–99 cmH_2O, or hPa
Pulse Oximetry signal strength	Green/Amber/Red
Pulse Rate	18–300 BPM
SBT f/Vt	0–999 BPM/L
SBT time remaining	00:00 *(mm:ss)*–01:59:59 *(hh:mm:ss)*
SpO_2	0–100%
Spontaneous Breath Rate (Sp f)	0–120 BPM
Spontaneous Tidal Volume (SpVte)	0–4,000 mL
Total Breath Rate (f)	0–120 BPM

7325

⚠ **WARNING**—U.S. Federal Law restricts this device–sale by or on the order of a physician.

CareFusion
22745 Savi Ranch Parkway
Yorba Linda, CA 92887

800.754.1914 toll-free
763.398.8500 tel
763.398.8403 fax

carefusion.com

CareFusion

© 2015 CareFusion Corporation or one of its subsidiaries. All rights reserved. ReVel, CareFusion and the CareFusion logo are trademarks or registered trademarks of CareFusion Corporation or one of its subsidiaries. RC4164 (0415/2000) L3425 Rev C

8051

PEDIGO®

bassinets



8051

bassinets

PEDIGO®
manufacturing lifetime value



shown with optional bassinet and pad

P-1110-SS
bassinet stand

features
- Design allows close approach from both sides
- Basket can be raised at either end
- 3" double ball bearing swivel casters
- *Lower shelf available as an option*

frame size
18¼"W x 31"L x 37¾"H
- Height with bassinet basket: 41"H



shown with optional bassinet and pad

P-1110-A-SS
bassinet stand with drawer

features
- Side mounted drawer measures: 16½"W x 13¼"L x 7⅜"H
- Design allows close approach from both sides
- Basket can be raised at either end
- 3" double ball bearing swivel casters
- *Lower shelf available as an option*

frame size
18¼"W x 31"L x 37¾"H
- Height with bassinet basket: 41"H



shown with optional bassinet and pad

P-1110-B-SS
bassinet stand with drawer

features
- Side mounted drawer measures: 16½"W x 21¼"L x 3⅛"H
- Design allows close approach from both sides
- Basket can be raised at either end
- 3" double ball bearing swivel casters
- *Lower shelf available as an option*

frame size
18¼"W x 31"L x 37¾"H
- Height with bassinet basket: 41"H



shown with optional bassinet and pad

P-1114-SS
bassinet stand with tote box drawers

features
- Design consistent with rooming-in techniques
- Two 10" deep tote boxes accessible from either side
- 4" double ball bearing swivel casters

dimensions
32"W x 20"L x 33"H
- Height with bassinet basket: 41"H



shown with optional bassinet and pad

P-1115-A-SS
bassinet cabinet

features
- Bassinet carriage slides back to allow working area
- Friction lock secures the bassinet in both open and closed positions
- Removable internal shelf, positioned in middle left compartment
- 4" double ball bearing swivel casters

dimensions
19¾"W x 30⅞"L x 37¼"H
- Height with bassinet 44⅛"

cabinet dimensions
- 17"W x 29½"L x 24⅞"H

drawer frame with removable pan
- 11¼"W x 16½"L x 4"H



shown with optional bassinet and pad

P-1115-SS
bassinet cabinet

features
- Bassinet carriage slides back to allow working area
- Friction lock secures the bassinet in both open and closed positions
- Removable internal shelf, positioned in middle left compartment
- 4" double ball bearing swivel casters

dimensions
19¾"W x 30⅞"L x 37¼"H
- Height with bassinet 44⅛"

cabinet dimensions
- 17"W x 29½"L x 24⅞"H

drawer frame with removable pan
- 11¼"W x 16½"L x 4"H



ST-1833-SS
pediatric scale table

features
- Designed for use with common electronic scales
- Oversize 4" casters for easy movement
- One brake caster forstability

dimensions
33"W x 18"D x 35½"H

OPTIONS



Part No. 53
Bassinet Basket

basket measures
16"W x 30¼"L x 9⅝"H



Part No. 54
Bassinet Pad - Grey

pad measures
12½"W x 26½"L x 1" Thick

800.822.3501 • FAX 360.696.1700 • www.pedigo-usa.com

4000 SE Columbia Way • Vancouver, Washington 98661

Printed using 100% Clean Wind Power

8060

stryker

Gynnie®
OB/GYN Stretcher



Easy. Multi-functional. Convenient.

Gynnie combines the durability and features of Stryker's standard stretcher with supreme OB/GYN functionality. This multi-functional stretcher is ideal for pelvic exams and can also be utilized for general use.



Pelvic exam conversion



4" Ultra Comfort support surface



Glideaway siderails

Retractable fifth wheel helps improve mobility.

Permanently attached parts to maximize caregivers' time.

Optional calf supports

Dual pedestal hydraulics to help optimize stability.

Four wheel, steel ring brakes with dual side and head activators to help secure platform and accessibility.

stryker

Gynnie
OB/GYN Stretcher



Standard features

- 4″ (10 cm) Ultra Comfort support surface with sealed seams
- 8″ (20 cm) Omni Surface casters with wheel covers
- 26″ (66 cm) wide patient surface
- Dual cylinder pneumatic backrest
- Dual pedestal hydraulics with constant rate descent
- Dual side-mounted foot control hydraulics
- Retractable fifth-wheel steering
- Four-wheel, steel-ring brakes with dual side and head activators
- Glideaway siderails
- Integrated storage tray with oxygen bottle holder
- Permanently-attached folding foot section
- Permanently-attached foot supports
- Pop-up push handles
- Roller bumpers
- Two IV receptacles
- Unique one-handed foot section release lever

Specifications

Model number	1061
Overall length	81″ (205.7 cm)
Overall width	
Siderails up	31.5″ (80 cm)
Siderails down	28″ (71 cm)
Weight capacity	500 lb. (225 kg)
Height range (to litter top)	
High	35.75″ (90.8 cm)
Low	22″ (55.5 cm)
Litter positioning	
Backrest	0°– 90°
Knee gatch	0°– 90°
Trend./Reverse Trend.	±18°
Maximum angle	87.5°
Patient surface	26″ x 75.5″ (66 x 191.5 cm)
Siderails	13″ x 39″ (34 x 99 cm)
Caster diameter	8″ (20 cm)
Break away point from wall	68″ (172.7 cm)

Optional features

- Hoop for drainage basin
- Patient restraints
- Serving/instrument tray
- Siderail pads
- IV poles
  - Permanent folding two- or three-stage at foot end
  - Removable
- Upright oxygen bottle holder
- Extended warranty available intermediate supports
- Upright oxygen bottle holder

Warranty

One year parts, labor and travel or two years parts

Stryker reserves the right to change specifications without notice.

Stryker Corporation or its divisions or other corporate affiliated entities own, use or have applied for the following trademarks or service marks: Gynnie, Ultra Comfort, Stryker. All other trademarks are trademarks of their respective owners or holder.

3800 E. Centre Avenue
Portage, MI 49002 USA
t: 269 329 2100
toll free: 800 327 0770

patienthandling.stryker.com

Copyright © 2017 Stryker
Mkt Lit-70 01262005 Rev H.1
Printed in U.S.A.

stryker®

Medical

GoBed® II Med/Surg Bed

Safe. Simple. Mobile.



The acceptable number of adverse events in your facility is zero. With the right technologies and processes in place, potential adverse events often can be predicted and prevented.

Extensive input and feedback from nursing professionals helped qualify the need for a med/surg bed that helps add efficiency and mobility to patient care practices. Numerous one-button or one-handed controls allow caregivers to spend their time helping patients recover quickly in a secure and comforting environment.



The GoBed II features full length siderail coverage to aid in patient safety.



A low bed height of 14.5 inches promotes proper patient positioning for safe entry and exit.



Conveniently located on the footboard, the integrated pump holder and 120-volt outlet help to maximize space at the foot end of the bed.

Available with Stryker's Chaperone® Bed Exit System and Zone Control® technology.

Single-button, in-bed scale provides repeatable weights with the patient in any position.

Complete siderail coverage and 14.5-inch low bed height contribute to a safe patient platform.

Centrally located fifth-wheel helps improve maneuverability and ease transport.

Integrated pump holder and optional 120-volt outlet conveniently located on the footboard.

stryker® 8066

Medical

GoBed II Med/Surg Bed

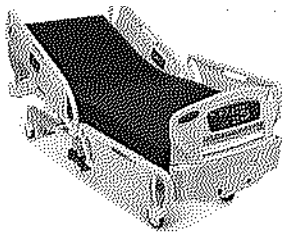

3800 E. Centre Ave.
Portage, MI 49002 U.S.A.
t: 269 329 2100 **f:** 269 329 2311
toll free: 800 787 9537

www.stryker.com

Standard Features

- 14.5-inch (37 cm) low-bed height
- Retractable fifth-wheel steering
- StayPut® retractable bed frame design
- 6-inch (15 cm) casters
- Trend./reverse Trend.
- Four independent electric motors
- Trend. display on footboard (only available with scale option)
- Centrally-located steer and four-wheel brake mechanism
- Four drainage bag hooks
- Eight IV pole/traction equipment sockets
- Roller bumpers
- Manual back-up for head and knee control
- Integrated pump holder
- Nurse controls on footboard and siderails
- Fixed patient controls on siderails
- Degree indicator for head elevation
- Patient restraint locations
- Electronic function lockout controls
- One-handed dampened siderail release
- Auto contour
- Photo-sensitive night light

GoBed II LX: All Standard Features Plus

- Chaperone Bed Exit System
- In-bed scale system
- CPR release

GoBed II EX: All Standard Features Plus

- Chaperone Bed Exit System
- In-bed scale system
- One-button cardiac chair
- CPR release
- Siderail communications package (includes nurse call with speakers, TV, radio, volume, room/read lights)

Specifications

Model Number	FL28C, FL28EX
Overall Length	94.25" (239.4 cm)
Overall Width	
Siderails Up	40" (101.6 cm)
Siderails Down	39" (99.1 cm)
Weight Capacity	500 lb. (227 kg)
Height Range (to litter top)	
High	29" (73.7 cm)
Low (standard with 6" casters)	14.5" (36.8 cm)
Litter Positioning	
Backrest	0°– 60° (siderails down)
Knee Gatch	0°– 28°
Trend./Reverse Trend.	±14°
Retraction	10" (25 cm)
Patient Surface	36" x 84" (91 x 213 cm)
Caster Diameter	6" (15 cm)

Electronics

Agency Approvals	UL60601-1, CSA601.1 and IEC60601-2-38
Volts	100 VAC, 120 VAC, 200 VAC, 220 VAC
Current Leakage	< 100 microamperes
Frequency	50 – 60 Hz
Hospital Grade Plug	Yes

Stryker reserves the right to change specifications without notice.

Optional Features

- Chaperone Bed Exit System
- Chaperone with Zone Control
- In-bed scale system
- CPR release
- Smart TV (includes closed caption, channel up/down and mute)
- Support Surfaces: pressure ulcer prevention and management
- Bed extender with pad
- Pillow speaker interface
- Removable litter covers
- Upright oxygen bottle holder
- IV poles
  - Permanent
  - Removable
- 120-volt auxiliary outlet
- Patient helper system
- Emergency crank handle
- Footboard-mounted monitor tray

FSC www.fsc.org MIX Paper from responsible sources FSC® C020250

Mkt Lit-116 07282005 Rev E.4
Copyright © 2015 Stryker

stryker

LD304
Birthing Bed



Your partner in delivery

LD304 birthing bed provides comfort and security for both mom and caregiver. Simple operation, mobility and an ergonomic design provide safety while positioning to mom's comfort.



Convenient controls



The ergonomic design



Length-adjustable footrests

Patented Lock-Rite foot section glides off for quick and easy breakdown.

Ultra Comfort Support Surface with integrated, high-memory egg crate topper promotes comfort.

Patented Skoocher feature moves mom closer to the perineal edge of the bed with the touch of a button

stryker

LD304
Birthing Bed



Standard features

- Lock-Rite slide-off foot section
- Lightweight, self-standing foot section
- Glideaway foot supports with six-way adjustability
- Single-button Trend.
- Three-position siderails
- In-rail motion controls with lockout
- 17.5-inch (44 cm) low bed height
- 5-inch (13 cm) Ultra Comfort head and seat support surface
- 3-inch (8 cm) foot mattress
- 6-inch (15 cm) Omni Surface casters with wheel covers
- Locking-caster steering
- Four-wheel, steel-ring brake system with centrally located activation pedal
- 33-inch (84 cm) mattress width with four motor functions (head, bed, foot, Trend.)
- Automatic pelvic tilt
- CPR release
- Manual backup
- Self-storing labor grips
- Plastic fluid basin
- Under-bed night light
- Wood headboard
- Permanent folding three-stage IV pole
- Two year parts and labor warranty

Specifications

Model number	4701
Overall length	93″ (236 cm)
Overall width	
Siderails up	41″ (104 cm)
Siderails down	37″ (94 cm)
Lift capacity	
Bed	500 lb. (226.7 kg)
Foot section	300 lb. (136.0 kg)
Height range (to litter top)	
High	35.5″ (90 cm)
Low	17.5″ (44 cm)
Litter positioning	
Backrest	0°-70°
Pelvic tilt	4°
Maximum Trend.	8°
Patient surface	33″ x 81″ (84 x 206 cm)
Support surface thickness	
Head/seat	5″ (13 cm)
Foot	3″ (8 cm)
Seat depth	
Standard	12.5″ (32 cm)
With Skoocher	12.5-8.5″ (32-22 cm)
Caster diameter	
Standard	6″ (15 cm)
Optional	8″ (20 cm)

Electronics

Agency approvals	C-US UL (120 V AC)
Volts	120 VAC (Domestic) 230 VAC (International)
Ampere rating	10 A
Current leakage	< 300 microamperes
Frequency	60 Hz (Domestic) 50/60 Hz (International)
Hospital grade plug	Yes
EMC Compatible	Yes
Motor function	Bed, head, foot, Skoocher (optional), Trend.

Stryker reserves the right to change specifications without notice.

Optional features

- Patented Skoocher adjusts seat depth from 12.5 inches to 8.5 inches (32 cm to 22 cm)
- Choice of removable or permanent calf supports
- Lumbar pillow and seat pillow
- Mattress overlay
- Basin liners
- Wallsaver quick-release connecting kit
- Siderail communications — includes nurse call only or nurse call with speaker, TV, radio, volume, room/read lights
- Smart TV — includes channel up/down, mute
- Pendant control
- Pendant port
- 8-inch (20 cm) casters
- Labor bar
- Linen for head and foot mattresses
- Extended warranty

Mkt Lit-1702 10 DEC 2018 REV A
Copyright © 2018 Stryker

3800 E. Centre Avenue
Portage, MI 49002 USA
t: 269 329 2100
toll free: 800 327 0770

stryker.com

Stryker Corporation or its divisions or other corporate affiliated entities own, use or have applied for the following trademarks or service marks: Lock-Rite, Skoocher, Stryker. All other trademarks are trademarks of their respective owners or holder.

8075

KICK BUCKET, STAINLESS STEEL

NEED TO DETERMINE IF KICKSTAND AND COVER ARE REQUIRED



SKU: BA007Category: Buckets, Trays & Strainers

- **Dimensions:** 12.5 qt (11.8 L), 12″ (30.5 cm) top diameter, 7.875″ (2o cm) base diameter, 10″ (25 cm) depth
- **Material:** Non-corrosive stainless steel

AVERAGE COST: FOR 15 OR MORE $440

SOURCE: https://www.mopec.com/product/set-kickstand-bucket-cover-2

stryker

LD304
Birthing Bed



Your partner in delivery

LD304 birthing bed provides comfort and security for both mom and caregiver. Simple operation, mobility and an ergonomic design provide safety while positioning to mom's comfort.



Convenient controls, such as single-button Trendelenburg and Stryker's powered Skoocher feature, allow customized positioning with minimal effort.



The ergonomic design of Stryker's foot section promotes proper body mechanics to help protect you from back strain and injury.



Length-adjustable footrests provide multiple leg positioning capabilities

Patented Lock-Rite foot section glides off for quick and easy breakdown.

Ultra Comfort Support Surface with integrated, high-memory egg crate topper promotes comfort.

Patented Skoocher feature moves mom closer to the perineal edge of the bed with the touch of a button

stryker

LD304
Birthing Bed



Standard features

- Lock-Rite slide-off foot section
- Lightweight, self-standing foot section
- Glideaway foot supports with six-way adjustability
- Single-button Trend.
- Three-position siderails
- In-rail motion controls with lockout
- 17.5-inch (44 cm) low bed height
- 5-inch (13 cm) Ultra Comfort head and seat support surface
- 3-inch (8 cm) foot mattress
- 6-inch (15 cm) Omni Surface casters with wheel covers
- Locking-caster steering
- Four-wheel, steel-ring brake system with centrally located activation pedal
- 33-inch (84 cm) mattress width with four motor functions (head, bed, foot, Trend.)
- Automatic pelvic tilt
- CPR release
- Manual backup
- Self-storing labor grips
- Plastic fluid basin
- Under-bed night light
- Wood headboard
- Permanent folding three-stage IV pole
- Two year parts and labor warranty

Specifications

Model number	4701
Overall length	93″ (236 cm)
Overall width	
Siderails up	41″ (104 cm)
Siderails down	37″ (94 cm)
Lift capacity	
Bed	500 lb. (226.7 kg)
Foot section	300 lb. (136.0 kg)
Height range (to litter top)	
High	35.5″ (90 cm)
Low	17.5″ (44 cm)
Litter positioning	
Backrest	0°-70°
Pelvic tilt	4°
Maximum Trend.	8°
Patient surface	33″ x 81″ (84 x 206 cm)
Support surface thickness	
Head/seat	5″ (13 cm)
Foot	3″ (8 cm)
Seat depth	
Standard	12.5″ (32 cm)
With Skoocher	12.5-8.5″ (32-22 cm)
Caster diameter	
Standard	6″ (15 cm)
Optional	8″ (20 cm)

Electronics

Agency approvals	C-US UL (120 V AC)
Volts	120 VAC (Domestic) 230 VAC (International)
Ampere rating	10 A
Current leakage	< 300 microamperes
Frequency	60 Hz (Domestic) 50/60 Hz (International)
Hospital grade plug	Yes
EMC Compatible	Yes
Motor function	Bed, head, foot, Skoocher (optional), Trend.

Stryker reserves the right to change specifications without notice.

Optional features

- Patented Skoocher adjusts seat depth from 12.5 inches to 8.5 inches (32 cm to 22 cm)
- Choice of removable or permanent calf supports
- Lumbar pillow and seat pillow
- Mattress overlay
- Basin liners
- Wallsaver quick-release connecting kit
- Siderail communications — includes nurse call only or nurse call with speaker, TV, radio, volume, room/read lights
- Smart TV — includes channel up/down, mute
- Pendant control
- Pendant port
- 8-inch (20 cm) casters
- Labor bar
- Linen for head and foot mattresses
- Extended warranty

Mkt Lit-1702 10 DEC 2018 REV A
Copyright © 2018 Stryker

3800 E. Centre Avenue
Portage, MI 49002 USA
t: 269 329 2100
toll free: 800 327 0770

stryker.com

Stryker Corporation or its divisions or other corporate affiliated entities own, use or have applied for the following trademarks or service marks: Lock-Rite, Skoocher, Stryker. All other trademarks are trademarks of their respective owners or holder.

8150-3 drawer

650 Ford Street
Colorado Springs, CO 80915
Toll:(800)433-4064 * Ph: (719)637-0300
Fax:(719)597-8273 * www.harloff.com

ETC Line, Three Drawers with Lower Compartment, Treatment Cart #ETC-3



Specifications

Construction:

• Sturdy, uni-body steel construction

Features:

• Low height make these carts ideal for bedside or under a counter
• Key lock with two keys
• 3” stem casters, two with brake
• Roller drawer slides
• Removable plastic top
• Latex free
• Twelve year warranty
• Hard-baked powder coat finish

Drawer Configuration:
• (3) – 2.75” (6.98 cm)
• (1) – 12” (30.5 cm) Storage compartment

Sixteen available color choices:
***Antimicrobial Finish Available**
Burgundy, Hammer Red, Red, Yellow, Beige, Sand, White, HammerTone Green, Teal, HammerTone Blue, Navy, Light Blue, HammerTone Gray, Light Gray, Mauve, Hammer Black

Assembled Cart Dimensions
• 27.25” H x 23.38” W x 15.13” D (69.2 cm H x 59.4 W x 38.4 D)
• Cart weight: 48 lbs (21.8 kg)
• Approx. Shipping Weight: 63 pounds (28.7 kg)

** PLEASE NOTE THIS CART IS SHORTER THAN STANDARD COUNTER HEIGHTS

8150-5 drawer
650 Ford Street
Colorado Springs, CO 80915
Toll:(800)433-4064 * Ph: (719)637-0300
Fax:(719)597-8273 * www.harloff.com

ETC Line, Five Drawer, Treatment Cart #ETC-5



Specifications

Construction:

• Sturdy, uni-body steel construction

Features:

• Low height make these carts ideal for bedside or under a counter
• Key lock with two keys
• 3” stem casters, two with brake
• Roller drawer slides
• Removable plastic top
• Latex free
• Twelve year warranty
• Hard-baked powder coat finish

Drawer Configuration:
• (3) – 2.75” (7.0 cm)
• (2) – 5.75” (14.6 cm)

Sixteen available color choices:
***Antimicrobial Finish Available**
Burgundy, Hammer Red, Red, Yellow, Beige, Sand, White, HammerTone Green, Teal, HammerTone Blue, Navy, Light Blue, HammerTone Gray, Light Gray, Mauve, Hammer Black

Assembled Cart Dimensions
• 27.25” H x 23.38” W x 15.13” D (69.2 cm H x 59.4 W x 38.4 D)
• Cart weight: 75 lbs (34.1 kg)
• Approx. Shipping Weight: 81 pounds (36.7 kg)

** PLEASE NOTE THIS CART IS SHORTER THAN STANDARD COUNTER HEIGHTS

Loaded Emergency Crash Cart

#LC037930



The Complete Emergency Crash Cart Kit contains a 6 drawer Crash Cart and all of the equipment that should be attached to or kept on top of the cart. It also contains the equipment and supplies necessary to prepare for adult and pediatric infusion and intubation, as well as the most commonly used medications. Explore our predesigned kits or design your own!

CS037951 - 6 Drawer Tall Steel Emergency Cart Included

Equipment and Supplies	
(1) Cardiac Board and Brackets	(1) Set of Utility Hooks, Railing and Supports
(1) IV Pole and Brackets	(100) Plastic Seals
(1) Collapsible Side Shelf	

LC037901 - Drawer 1 - Simulated Medications	
(2) Amiodarone 150 mg/3 ml Vial	(2) Lidocaine 100 mg 5 ml Syringes
(2) Atropine 1 mg/10 ml Syringe	(2) Sodium Bicarbonate 50 mEq/50 ml Syringe
(2) Calcium Chloride 1 gm/10 ml Syringe	(2) Vasopressin 20 units/ml 1 ml Vial
(2) Dextrose 50% 0.5 mg/ml 50 ml Syringe	(10) Povidone-Iodine Swabstick
(2) Dopamine Vial	(1) Box Alcohol Swabs
(2) Epinephrine 1 mg/10 ml (1:10,000) Syringe	

LC037902 - Drawer 2 - Adult Intubation Supplies	
(1) 6.0 Adult Microcuff ET Tube	(2) Adult Stylet: 14 FR
(1) 7.0 Adult Microcuff ET Tube	(1) CO2 Colorimetric Indicator
(1) 8.0 Adult Microcuff ET Tube	(1) Flashlight
(1) 9.0 Adult Microcuff ET Tube	(2) Luer Lock Syringe: 35 mL
(1) Twill Tape	(1) Magill Forceps: Adult
(10) Packets Sterile Lubricating Jelly	(1) Disposable Macintosh #3 Laryngoscope Blade
(3) Bite Block	(1) Disposable Macintosh #4 Laryngoscope Blade
(1) Nasopharyngeal Airways: 26 FR	(1) Disposable Miller #3 Laryngoscope Blade
(1) Nasopharyngeal Airways: 30 FR	(1) Disposable Laryngoscope Handle
(1) Nasopharyngeal Airways: 32 FR	(2) Plastic Airway: 90 mm
(1) Box Tongue Depressor	(2) Plastic Airway: 100 mm
(1) Kelly Forceps	

7013 Orchard Road, Suite 110, West Bloomfield, Michigan 48322 USA
Phone: 248-855-3966 | 877-593-6011 | Fax: 248-671-1550
www.DiaMedicalUSA.com | www.MedMattress.com | Info@DiaMedicalUSA.com

LC037903 - Drawer 3 - Pediatric Intubation Supplies	
(1) 3.0 mm Microcuff ET Tube 35111	(2) Huggable ECG Electrode
(1) 3.5 mm Microcuff ET Tube 35112	(2) Neonatal Armboard: 3" x 1"
(1) 4.0 mm Microcuff ET Tube 35113	(2) Infant Armboard: 3" x 2"
(1) 4.5 mm Microcuff ET Tube 35114	(2) Spinal Needle: 22 GA - 3½
(1) 5.5 mm Microcuff ET Tube 35115	(2) Insyte Autoguard: 22 GA - 0.9 x 25 mm
(2) Neonatal Stylet 6 FR	(2) Insyte Autoguard: 24 GA - 0.75" x 19 mm
(1) Disposable Miller Laryngoscope Blade: #0	(5) Skin Protectant Swabstick
(1) Disposable Miller Laryngoscope Blade: #1	(1) Infant Feeding Tube: 5 FR
(1) Disposable Miller Laryngoscope Blade: #2	(1) Salem Sump (NG/OG): 10 FR
(1) Disposable Macintosh Laryngoscope Blade: #2	(1) Suction Catheter Kit: 6 FR
(1) Disposable Laryngoscope Handle	(1) Suction Catheter Kit: 8 FR
(1) Magill Forceps (Pediatric)	(1) Suction Catheter Kit: 10 FR
(2) Airway Size 40 mm	(1) Suction Catheter Kit: 12 FR
(2) Airway Size 60 mm	

LC037904 - Drawer 4 - IV Start Supplies	
(2) IV Start Kit	(1) Insyte Autoguard: 18 G 1.16" 1.3 x 30 mm
(1) Angiocath. 14 G 5.25" 2.1 x 133 mm	(1) Insyte Autoguard: 20 G 1.16" 1.1 x 30 mm
(3) Chloraprep	(1) Needle: 18 G x 1½"
(3) Luer Lock Syringe: 10 mL	(2) Needle: 18 G x 3½"
(2) Luer Lock Syringe: 6 mL	(2) Needle: 20 G x 1½"
(2) Luer Lock Syringe: 3 mL	(2) Needle: 19 G x 1½" Filter Needle
(2) Luer Lock Syringe: 1 mL	(2) Transpore Tape: 1"
(2) TB Syringe: 25 G 5/8" Syringe – 1 mL	(5) Monoject SmarTip Needleless Vial Access Cannula
(3) Tourniquet	(1) VAMP VMP400
(1) Insyte Autoguard: 14 G 1.75" 2.1 x 45 mm	(3) Way Stopcock
(1) Insyte Autoguard: 16 G 1.16" 1.7 x 30 mm	(1) Smallbore 7" Ext. Set with MicroClave Connector

LC037905 - Drawer 5 - IV Supplies and Tubing	
(2) Luer Lock Syringe: 30 mL	(1) Betadine Prep Pads
(2) Luer Lock Syringe: 20 mL	(2) Adhesive Tape 1"
(1) Catheter Tip Syringe: 60 mL	(1) IV Gravotu Set
(1) Portex Pro-Vent Arterial Blood Sampling Kit: 3 mL	(2) Sodium Chloride 0.9% - 100 mL Bag
(1) Adult Armboard	(2) Sodium Chloride 0.9% - 1000 mL Bag
(1) Betadine solution 4 oz	(2) Dextrose 5% - 250 mL Bag
	(2) Sodium Chloride Flush Syringe - 10 mL

LC037906 - Drawer 6 - Common Supplies	
(1) Box Surgical Gloves - 6.0	(1) Yankauer with Suction Tubing
(1) Box Surgical Gloves - 6.5	(5) Sterile Field
(1) Box Surgical Gloves - 7.0	(2) Suction Cath Kit 14 FR
(1) Box Surgical Gloves - 7.5	(2) Slip Tip Syringe: 10 mL
(1) Box Surgical Gloves - 8.0	(2) Slip Tip Syringe: 12 mL
(1) Box Sensi Care Gloves: Large – Non Sterile and Latex	(5) Kerlix Sponges
(1) Suture: 3.0 Silk	(1) Cricothyroidotomy Pack
(1) Needle Holder	

Loaded Pediatric Crash Cart

#LC017910

CS037930 - 9 Drawer Pediatric Crash Cart Included

LC017910 - Drawer 1 - Simulated Medications
(2) Adenosine Syringe
(1) Atropine Syringe
(1) Amiodarone Vial
(1) Calcium Chloride Vial
(1) Dextrose 50% Vial
(1) Dextrose 50% Syringe
(2) Epinephrine 1:10000 Syringe
(1) Epi-Pen
(1) Lidocaine 2% Syringe
(1) Naloxone (Narcan) 0.4 mg/ml Vial
(1) Naloxone (Narcan) 1 mg/ml Syringe
(3) Sodium Bicarbonate 4.2% Syringe
(1) Broselow tape

The Complete 9 Drawer Pediatric Cart Kit comes with a full size, color coded 9 drawer Pediatric/Braslow cart, as well as all the supplies needed to stock drawers 1 through 9. Explore our predesigned kits or design your own!



LC017902 - Drawer 2 - Patient Weight: 0.5 kg - 8 kg	
VASCULAR ACCESSORIES	AIRWAY EQUIPMENT
(1) IV Start Kit	(1) Cuffed Endotracheal Tube: 3.0 mm
(2) IV Catheter: 22 Gauge	(1) Cuffed Endotracheal Tube: 4.0 mm
(2) IV Catheter: 24 Gauge	(1) Small Stylet: 6 FR
(2) Butterfly Needle: 23 Gauge	(1) Suction Catheter: 6 FR
(2) IV Extension Set: Male to Female	(1) Suction Catheter: 8 FR
(2) IV Extension Set: Male to Male	(1) Nasogastric Tube: 5 FR - 15”
(2) 3-Way Stopcock	(1) Nasogastric Tube: 8.0 FR - 15”
(5) Sodium Chloride Flush Syringe: 3 mL	(1) Lubrication Packet
(5) Sodium Chloride Flush Syringe: 10 mL	(1) Syringe: 35 mL
(2) Safety Needles 1.5”: 22 Gauge	(1) Nasal Airway Rusch: 12 FR
(2) Safety Needles 1.5”: 25 Gauge	(1) Oral Airway #0: 50 mm
(2) Luer Lock Syringe: 60 mL	(1) Oral Airway #1: 60 mm
(2) Luer Lock Syringe: 20 mL	
(2) Luer Lock Syringe: 10 mL	
(2) Luer Lock Syringe: 3 mL	
(2) Luer Lock Syringe: 1 mL	

5807 W. Maple Road, Suite 175, West Bloomfield, Michigan 48322 USA
Phone: 248-855-3966 | 877-593-6011 | Fax: 248-671-1550
www.DiaMedicalUSA.com | www.MedMattress.com | Info@DiaMedicalUSA.com

LC017903 - Drawer 3 - Patient Weight: 9 kg - 11 kg	
VASCULAR ACCESSORIES	AIRWAY EQUIPMENT
(1) IV Start Kit	(1) Cuffed Endotracheal Tube: 3.5 mm
(2) IV Catheter: 22 Gauge	(1) Cuffed Endotracheal Tube: 4.0 mm
(2) IV Catheter: 24 Gauge	(1) Small Stylet: 6 FR
(2) Butterfly Needle: 23 Gauge	(1) Suction Catheter: 8 FR
(2) IV Extension Set: Male to Female	(1) Suction Catheter: 10 FR
(2) IV Extension Set: Male to Male	(1) Nasogastric Tube: 8.0 FR - 15”
(2) 3-Way Stopcock	(1) Lubrication Packet
(5) Sodium Chloride Flush Syringe: 3 mL	(1) Syringe: 35 mL
(5) Sodium Chloride Flush Syringe: 10 mL	(1) LMA # 1.5
(2) Safety Needles 1.5”: 22 Gauge	(1) Nasal Airway Rusch: 16 FR
(2) Safety Needles 1.5”: 25 Gauge	(1) Oral Airway #1: 60 mm
(2) Luer Lock Syringe: 60 mL	
(2) Luer Lock Syringe: 20 mL	
(2) Luer Lock Syringe: 10 mL	
(2) Luer Lock Syringe: 3 mL	
(2) Luer Lock Syringe: 1 mL	

LC017904 - Drawer 4 - Patient Weight: 12 kg - 14 kg	
VASCULAR ACCESSORIES	AIRWAY EQUIPMENT
(1) IV Start Kit	(1) Cuffed Endotracheal Tube: 4.0 mm
(2) IV Catheter: 20 Gauge	(1) Cuffed Endotracheal Tube: 4.5 mm
(2) IV Catheter: 22 Gauge	(1) Small Stylet: 6 FR
(2) Butterfly Needle: 23 Gauge	(1) Suction Catheter: 10 FR
(2) IV Extension Set: Male to Female	(1) Lubrication Packet
(2) IV Extension Set: Male to Male	(1) Syringe: 35 mL
(2) 3-Way Stopcock	(1) LMA # 2.0
(5) Sodium Chloride Flush Syringe: 3 mL	(1) Oral Airway #2: 60 mm
(5) Sodium Chloride Flush Syringe: 10 mL	
(2) Safety Needles 1.5”: 22 Gauge	
(2) Safety Needles 1.5”: 25 Gauge	
(2) Luer Lock Syringe: 60 mL	
(2) Luer Lock Syringe: 20 mL	
(2) Luer Lock Syringe: 10 mL	
(2) Luer Lock Syringe: 3 mL	
(2) Luer Lock Syringe: 1 mL	

5807 W. Maple Road, Suite 175, West Bloomfield, Michigan 48322 USA
Phone: 248-855-3966 | 877-593-6011 | Fax: 248-671-1550
www.DiaMedicalUSA.com | www.MedMattress.com | Info@DiaMedicalUSA.com

LC017905 - Drawer 5 - Patient Weight: 15 kg - 18 kg	
VASCULAR ACCESSORIES	AIRWAY EQUIPMENT
(1) IV Start Kit	(1) Cuffed Endotracheal Tube: 4.5 mm
(2) IV Catheter: 18 Gauge	(1) Cuffed Endotracheal Tube: 5.0 mm
(2) IV Catheter: 20 Gauge	(1) Small Stylet: 6 FR
(2) IV Catheter: 22 Gauge	(1) Suction Catheter: 10 FR
(2) Butterfly Needle: 23 Gauge	(1) Suction Catheter: 12 FR
(2) IV Extension Set: Male to Female	(1) Lubrication Packet
(2) IV Extension Set: Male to Male	(1) Syringe: 35 mL
(2) 3-Way Stopcock	(1) LMA # 2.5
(5) Sodium Chloride Flush Syringe: 3 mL	(1) Oral Airway #2: 70 mm
(5) Sodium Chloride Flush Syringe: 10 mL	
(2) Safety Needles 1.5": 22 Gauge	
(2) Safety Needles 1.5": 25 Gauge	
(2) Luer Lock Syringe: 60 mL	
(2) Luer Lock Syringe: 20 mL	
(2) Luer Lock Syringe: 10 mL	
(2) Luer Lock Syringe: 3 mL	
(2) Luer Lock Syringe: 1 mL	

LC017906 - Drawer 6 - Patient Weight: 19 kg - 23 kg	
VASCULAR ACCESSORIES	AIRWAY EQUIPMENT
(1) IV Start Kit	(1) Cuffed Endotracheal Tube: 5.0 mm
(2) IV Catheter: 18 Gauge	(1) Cuffed Endotracheal Tube: 5.5 mm
(2) IV Catheter: 20 Gauge	(1) Medium Stylet: 10 FR
(2) Butterfly Needle: 23 Gauge	(1) Suction Catheter: 10 FR
(2) IV Extension Set: Male to Female	(1) Suction Catheter: 12 FR
(2) IV Extension Set: Male to Male	(1) Lubrication Packet
(2) 3-Way Stopcock	(1) Catheter Tip Syringe: 60 mL
(5) Sodium Chloride Flush Syringe: 3 mL	(1) LMA # 3.0
(5) Sodium Chloride Flush Syringe: 10 mL	(1) Oral Airway #2: 70 mm
(2) Safety Needles 1.5": 22 Gauge	(1) Oral Airway #3: 80 mm
(2) Safety Needles 1.5": 25 Gauge	
(2) Luer Lock Syringe: 60 mL	
(2) Luer Lock Syringe: 20 mL	
(2) Luer Lock Syringe: 10 mL	
(2) Luer Lock Syringe: 3 mL	
(2) Luer Lock Syringe: 1 mL	

5807 W. Maple Road, Suite 175, West Bloomfield, Michigan 48322 USA
Phone: 248-855-3966 | 877-593-6011 | Fax: 248-671-1550
www.DiaMedicalUSA.com | www.MedMattress.com | Info@DiaMedicalUSA.com

LC017907 - Drawer 7 - Patient Weight: 24 kg - 50 kg	
VASCULAR ACCESSORIES	AIRWAY EQUIPMENT
(1) IV Start Kit	(1) Cuffed Endotracheal Tube: 5.5 mm
(2) IV Catheter: 18 Gauge	(1) Cuffed Endotracheal Tube: 6.0 mm
(2) IV Catheter: 20 Gauge	(1) Medium Stylet: 10 FR
(2) Butterfly Needle: 23 Gauge	(1) Suction Catheter: 12 FR
(2) IV Extension Set: Male to Female	(1) Suction Catheter: 14 FR
(2) IV Extension Set: Male to Male	(1) Lubrication Packet
(2) 3-Way Stopcock	(1) Catheter Tip Syringe: 60 mL
(5) Sodium Chloride Flush Syringe: 3 mL	(1) Nasal Airway Rusch: 26 FR
(5) Sodium Chloride Flush Syringe: 10 mL	(1) Nasal Airway Rusch: 28 FR
(2) Safety Needles 1.5”: 22 Gauge	(1) Oral Airway #2: 70 mm
(2) Safety Needles 1.5”: 25 Gauge	(1) Oral Airway #3: 80 mm
(2) Luer Lock Syringe: 60 mL	
(2) Luer Lock Syringe: 20 mL	
(2) Luer Lock Syringe: 10 mL	
(2) Luer Lock Syringe: 3 mL	
(2) Luer Lock Syringe: 1 mL	

LC017908 - Drawer 8 - Patient Weight: 50 kg +	
VASCULAR ACCESSORIES	AIRWAY EQUIPMENT
(1) IV Start Kit	(1) Cuffed Endotracheal Tube: 7.0 mm
(2) IV Catheter: 14 Gauge	(1) Cuffed Endotracheal Tube: 8.0 mm
(2) IV Catheter: 18 Gauge	(1) Large Stylet: 12 FR
(2) IV Catheter: 20 Gauge	(1) Suction Catheter: 12 FR
(2) Butterfly Needle: 23 Gauge	(1) Suction Catheter: 14 FR
(2) IV Extension Set: Male to Female	(1) Lubrication Packet
(2) IV Extension Set: Male to Male	(1) Catheter Tip Syringe: 60 mL
(2) 3-Way Stopcock	(1) LMA # 4
(5) Sodium Chloride Flush Syringe: 3 mL	(1) Nasal Airway Rusch: 30 FR
(5) Sodium Chloride Flush Syringe: 10 mL	(1) Nasal Airway Rusch: 32 FR
(2) Safety Needles 1.5”: 22 Gauge	(1) Oral Airway #4: 90 mm
(2) Safety Needles 1.5”: 25 Gauge	(1) Oral Airway #5: 100 mm
(2) Luer Lock Syringe: 60 mL	
(2) Luer Lock Syringe: 20 mL	
(2) Luer Lock Syringe: 10 mL	
(2) Luer Lock Syringe: 3 mL	
(2) Luer Lock Syringe: 1 mL	

5807 W. Maple Road, Suite 175, West Bloomfield, Michigan 48322 USA
Phone: 248-855-3966 | 877-593-6011 | Fax: 248-671-1550
www.DiaMedicalUSA.com | www.MedMattress.com | Info@DiaMedicalUSA.com

LC017909 - Drawer 9 - Common Supplies	
AIRWAY EQUIPMENT	VASCULAR ACCESS EQUIPMENT
(1) Laryngoscope Handle: Small	(2) 0.9% NaCl IV Bag: 1000 mL
(1) Laryngoscope Handle: Large	(2) 5% Dextrose IV Bag: 500 mL
(1) Laryngoscope Bulbs: Small – Pack of 6	(5) Tegaderm Dressings
(1) Laryngoscope Bulbs: Large – Pack of 6	(5) Blank IV Lables
(1) Miller Blade: Size 0	(50) Gauze Sponge: 2” x 2”
(1) Miller Blade: Size 1	(10) Skin Protectant Wipe
(1) Miller Blade: Size 2	(25) Tourniquet
(1) Mac Blade: Size 2	(3 Pairs) Sterile Gloves: Size 6.0
(1) Mac Blade: Size 3	(3 Pairs) Sterile Gloves: Size 7.0
(1) McGill Forceps	(3 Pairs) Sterile Gloves: Size 8.0
(5) Bulb Syringe	MISCELLANEOUS EQUIPMENT
(1) Yankauer Suction Tube	(1 Box) Non Sterile Gloves: Small
(3) White Tape Rolls: ½ Inch, 1 Inch	(1 Box) Non Sterile Gloves: Medium
(1) Pediatric Non-Rebreather Mask	(1 Box) Non Sterile Gloves: Large
(5) Basic Face Mask	(1) Flashlight
(1) Nasal Cannula	(5) Isolation Gown
(1) Nipple Adaptors	(4) Mask with Face Shield
(1) Stethoscope	(1 Box) Isolation Mask
(1) Peep Valve	

8166
650 Ford Street
Colorado Springs, CO 80915
Toll:(800)433-4064 * Ph: (719)637-0300
Fax:(719)597-8273 * www.harloff.com

Aluminum Universal Line Super 7 Drawer Procedure/Nurse Supply Cart with Basic Electronic Pushbutton Lock #AL810E7

Harloff's 20 years of innovation in hospital cart design and construction has resulted in the Universal Line. Its modern appearance incorporates industry-leading standard features with flexible configuration options.



Color Shown is Beige.
Additonal Colors Available

Specifications

Construction:

- Aluminum construction

Features:

- Internal Pullout shelf on left side
- Basic Electronic Pushbutton Lock
- Key Lock Override
- Factory Set User and Supervisor Code
- Cabinet may be programmed in the field
- 32.5" of vertical drawer space
- Cabinet design allows for customized drawer configurations
- Painted steel top rail / push handle
- Removable plastic top
- Protective pontoon bumpers
- Extended caster footprint for stability when drawers are extended
- 5" (12.7 cm) ball-bearing premium casters, all full swivel- one tracking, one braking
- Ball-bearing full extension drawer slides
- Cart is delivered wheels-on and mostly assembled
- Pre-drilled hole locations for standard accessories – many are pre-threaded for ease of installation
- Latex free
- Durable, hard-baked powder coat finish available in 16 colors
- Twelve year manufacturer's warranty

Drawer Configuration:

- (5) – 3.25" (8.3 cm)
- (1) – 6.5" (16.5 cm)
- (1) – 9.75" (24.8 cm)

Internal Drawer Dimensions:

- 23" W x 17" D (58.4 cm W x 43.2 cm D)

Assembled Cart Dimensions:

- 48" H x 31" W x 24.75" D (121.9 cm H x 78.7 cm W x 62.9 cm D)
- Cart weight: 122 pounds (55.5 kg)
- Approximate shipping weight: 152 pounds (69 kg)

8181

stryker

Cub®
Pediatric Crib



Safe. Access. Ease of use.

When you're using our products that are developed with safety and ease-of-use at the forefront of design, you can feel confident you're giving your patients the best care possible. The Cub Pediatric Crib has a simple, safe design that's warm friendly appearance cultivates a comforting environment for small children and their families.







Retractable fifth wheel helps improve caregiver mobility.

Retracting backrest helps eliminate head-end gap while raising the head end of the stretcher.

Counterbalance system on siderail for easy raising and lowering.

Optional protective top can be equipped with intermediate support position on each side.

Optional integrated scale system obtains accurate weights with the child in any position.*

Multiple sticker color options allow you to customize the stretcher for identification purposes.

Red Blue Gray Green Purple Burgundy

*The scale system allows the reading of a patient's weight in pounds (lb) or kilograms (kg) with a ± 0.5 lb (0.2 kg) at 50 lb or less ± 1.01 lb (0.4 kg) at ≥ 50 lb (22 kg).

8181

stryker

Cub
Pediatric Crib



Standard features

- 4″ (10 cm) Ultra Comfort support surface
- Manually-operated pneumatic-assist backrest
- Manual foot prop
- Siderail with 9″ (23 cm) mandatory stop
- Counterbalance system on siderail for easy raising and lowering
- Oxygen bottle holder
- Access doors at all four corners
- Fully-lowerable side rails provide unobstructed access around entire unit
- Retractable fifth-wheel steering
- 6″ (15 cm) Omni Surface™ casters
- Central-locking brake system
- Dual side-mounted foot control hydraulics
- Uni-lower pedal
- Hands-free Trendelenburg and reverse Trendelenburg

Warranty

- One year parts, labor and travel or two years parts

Specifications

Model number	FL19H
Overall length and width	
No accessory supports	65.5″ x 37″ (166 x 94 cm)
With accessory supports	72.25″ x 37.5″ (184 x 95 cm)
Weight capacity	400 lb. (181 kg)
Safe working load	100 lb. (45 kg)
Height range (to litter top)	
High	40″ (102 cm)
Low	33″ (84 cm)
Litter positioning	
Manual activated	0° / 25° / 40° / 55°
Pneumatic assist	0 - 50°
Trend./reverse Trend.	±9.5°
Foot section angle	0° / 6° / 12°
Support surface	30.13″ x 58.25″ (76.5 x 148 cm)
Caster diameter	6″ (15 cm)

Optional features

- Integrated scale system
  (scale system is not CE marked)
- Siderail without 9″ (23 cm) mandatory stop
- Accessory supports with roller bumpers
  (head, foot or both ends)
- Chart shelf
- IV caddy
- Monitor tray
  (not compatible at foot-end when scale option is selected)
- Oxygen bottle retaining ring
- Siderail pads
- IV poles
  - Permanent folding two- or three-stage
  - Standard removable
- Retractable protective top with or without intermediate supports
- Upright oxygen bottle holder

Stryker reserves the right to change specifications without notice.

Stryker Corporation or its divisions or other corporate affiliated entities own, use or have applied for the following trademarks or service marks: Cub, Stryker. All other trademarks are trademarks of their respective owners or holder.

3800 E. Centre Avenue
Portage, MI 49002 USA
t: 269 329 2100
toll free: 800 327 0770

patienthandling.stryker.com

Copyright © 2017 Stryker
Mkt Lit-62-01262005 Rev K.3
Printed in the U.S.A.

HeartSine®
Inventor. Innovator. Lifesaver.

samaritan® PAD 350P

Public Access Defibrillator with CPR Coaching



Compact, Easy-to-Use, Lifesaving Technology

Sudden Cardiac Arrest (SCA) is a leading cause of death globally. Response time is critical for survival. The samaritan® PAD 350P is designed especially for use in public areas by providing a sophisticated defibrillator for adult or pediatric use, inside a lightweight and easy-to-operate system.

Compact in Size, Long on Ability

Portable and lightweight. The samaritan PAD 350P is lighter (2.4 lbs/1.1 kg) and smaller than other defibrillators.

Durable. The samaritan PAD 350P resists shock and vibration and carries an IP56 Rating, the industry's highest rating against dust and moisture ingress. It also carries a ten year unit warranty.

Advanced technology. The samaritan PAD 350P utilizes proprietary electrode technology, advanced and stable firmware, and proprietary SCOPE™* Biphasic technology (an escalating and low-energy waveform that automatically adjusts for patient impedance differences) to assess rhythm and recommend defibrillation if necessary.

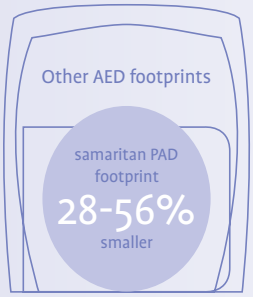



Advanced technology balanced against the demands of real world use. At HeartSine, our innovation changes lives. And saves lives.

*Self-Compensating Output Pulse Envelope (SCOPE) technology automatically compensates energy, slope and pulse envelope for the patient.

Easy-to-Follow Visual and Verbal Guides

User-friendly. The samaritan PAD 350P features easy-to-understand visual and voice prompts that guide a user through the process including CPR coaching.

Two-button operation. Only two buttons, ON/OFF and SHOCK, are required for straightforward operation.

Always ready. A System Status Ready Indicator flashes to show that the complete system is operational and ready for use. The device automatically runs self-check each week.



Visual cues prompt pad placement



Stand clear of the patient



Safe to touch the patient

Real Economy for the Real World

Two parts, one expiration date. Pad-Pak™ cartridge combines battery and electrode pads, with one expiration date to monitor.

Low cost of ownership. With a shelf life of four years from date of manufacture, the Pad-Pak offers significant savings over other defibrillators that require separate battery and pad units.



Pad-Pak and Pediatric-Pak with pre-attached electrodes.

The HeartSine PAD's built-in intelligence and unique pediatric Pad-Pak ensure the appropriate energy level is delivered for children.



Technical Overview

GUIDELINES CPR ECC 2010

Physical	With Pad-Pak™ Inserted
Size:	8.0 in x 7.25 in x 1.9 in (20 cm x 18.4 cm x 4.8 cm)
Weight:	2.4 lbs (1.1 kg) including Pad-Pak Battery

Defibrillator	
Waveform:	Self-Compensating Output Pulse Envelope (SCOPE) Biphasic waveform. Optimized biphasic escalating waveform compensates energy, slope and envelope for patient impedance

Patient Analysis System	
Method:	Evaluates patient's ECG, signal quality, electrode contact integrity and patient impedance to determine if defibrillation is required
Sensitivity/Specificity:	Meets ISO 60601-2-4

Environmental	
Operating/Standby Temperature:	+32°F to +122°F (0°C to 50°C)
Temporary Transportation Temperature:	14°F to 122°F (–10°C to 50°C) for up to two days. Unit must be returned to standby/operating temperature for 24 hours before use.
Relative Humidity:	5% to 95% (non-condensing)
Water Resistance:	IEC 60529/EN 60529 IP56
Altitude:	0 to 15,000 feet (0 – 4,575 meters)
Shock:	MIL STD 810F Method 516.5, Procedure I (40 G's)
Vibration:	MIL STD 810F Method 514.5+ Category 4 Truck Transportation – US Highways Category 7 Aircraft – Jet 737 & General Aviation (Exposure)
EMC:	EN 60601-1-2
Radiated Emissions:	EN55011
Electrostatic Discharge RF Immunity:	EN61000-4-3 80MHZ-2.5GHZ (10 V/m)
Magnetic Field Immunity:	EN61000-4-8 (3 A/m)
Aircraft:	RTCA/DO-160F, Section 21 (Category M)
Falling Height:	3.3 feet (1 meter)

Energy Selection			
Adult:	Shock 1: 150J;	Shock 2: 150J;	Shock 3: 200J
Pediatric:	Shock 1: 50J;	Shock 2: 50J;	Shock 3: 50J

Charging Time	
New Battery:	Typically 150J in < 8 seconds, 200J in < 12 seconds
After 6 Discharges:	Typically 150J in < 8 seconds, 200J in < 12 seconds

Event Documentation	
Type:	Internal Memory
Memory Capacity:	90 minutes of ECG (full disclosure) and event/ incident recording
Playback Capabilities:	Custom USB cable directly connected to PC and Saver™ EVO Windows-based data review software

Materials Used	
samaritan® PAD 350P:	ABS, Santoprene. Printed circuit board with electronic components.
Housing:	ABS – Electrodes: Hydrogel, Silver, Aluminium and Polyester

Pad-Pak — Electrode and Battery Cartridge Adult Pad-Pak (Pad-Pak-01) and Pediatric Pad-Pak (Pad-Pak-02)	
Shelf Life:	4 years from manufacture date
Weight:	0.44 lbs (0.2 kg)
Size:	3.93 in x 5.24 in x .94 in (10 cm x 13.3 cm x 2.4 cm)
Battery Type:	Lithium Manganese Dioxide (LiMnO2)
Capacity:	> 60 shocks at 200J 18V, 1.5 Amp Hrs
Electrodes:	HeartSine samaritan® disposable defibrillation pads are supplied as standard with each device
Placement:	Anterior-lateral (Adult); Anterior-posterior (Pediatric)
Active Gel Area:	15.5 in² (100 cm²)
Cable Length:	3.3 feet (1 meter)

Lifesaving, **Pure and Simple**

Authorized Distributor

U.S./Americas
HeartSine Technologies, Inc.
121 Friends Lane, Suite 400
Newtown, PA 18940
Toll Free: (866) 478 7463
Tel: +1 215 860 8100
Fax: +1 215 860 8192
info@heartsine.com

Europe/Rest of the World
HeartSine Technologies, Inc.
203 Airport Road West
Belfast, Northern Ireland BT3 9ED
Tel: +44 28 90 93 94 00
Fax: +44 28 90 93 94 01
info@heartsine.co.uk

CE 0120
The products described in this brochure all meet the applicable European Medical Directive requirements.

CLASSIFIED C UL US
UL Classified. See complete marking on product.

CAUTION: U.S. Federal law restricts this device to sale by or on the order of a licensed practitioner.

HeartSine®
Inventor. Innovator. Lifesaver.

www.heartsine.com

© 2014 HeartSine Technologies, Inc. All rights reserved. H009-032-101-1



8202 & 8202a

HEARTSINE 350P AED & SMALL WALL CABINET KIT

What's Included:

- Brand New Heartsine Samaritan AED
- 8 Year Manufacturer's Warranty Adult Pad-Pak (electrode pads/battery combo pack)
- Quick Reference Card
- Heart Smart AED Wall Cabinet w/Standard Alarm (HST-CAB01)
- Heart Smart AED Projection Wall Sign (2-Way) (HST-WS01)
- Carrying Case
- Training DVD (downloadable)
- Medical Prescription / Authorization
- Heart Smart CPR/AED Rescue Kit (HSRK-10)
- Heart Smart Inspection / Maintenance Tag (HST-ACC01)
- Heart Smart "AED Equipped Facility" Decal (HST-ACC02)
- Cloud Based AED Program Management

Small Cabinet

Width: 14”
Height: 11 5/8”
Depth: 6”

Product Code: BUS-PKG-SAM (AVERAGE RETAIL COST $1295

SOURCE: https://www.heartsmart.com/heartsine-samaritan-pad-aed-defibrillator-package-p/bus-pkg-sam.htm

EMERGENCY SPECIALTIES

AED SEMI RECESSED WALL CABINET:
SEE HIGHLIGHTED AREAS

FREESTANDING AED CABINET STAND: 1480 SERIES



This Decorative Stand with a Surface-Mount Steel or Aluminum Cabinet can be an Attractive Addition to a Building's Décor by Coordinating Finishes and Paint Colors.

Construction: 52" structural steel tubing and steel baseplate. White epoxy or silver metallic finish standard, with custom colors also available.

DUAL CABINET FOR AED AND EMERGENCY OXYGEN: OLYMPUS 1900 SERIES

Provide More Lifesaving Equipment by Including Emergency Oxygen with Your AED.

Door & Trim Construction: CRS with white powder-coat finish, #4 stainless steel or clear anodized aluminum. 1-3/4" trim on face and door, mounted in a 5/8" door stop and attached by a continuous hinge. All models feature a clear acrylic window with graphics, zinc-plated handle and roller catch.
Trim Style & Depth: Surface-mount has a square edge. Recessed – 3/8" flat trim, Semi-Recessed – 1-1/2" square edge or 3" rolled edge.
Alarm: 85 db Commander (audible) alarm standard.
Oxygen: Accommodates up to "D" size cylinder. Available with patented Tx02 oxygen system that features easy-to use automatic flow system.
Tub: White powder coated CRS. Fire-rated option available.



1913F12

WEATHER-RESISTANT AED CABINETS: 1463 SERIES

Protect Your AED From Moisture and Dust with this Durable Surface-Mount Cabinet.

Construction: This AED cabinet is constructed of galvanized steel and powder coated for a durable, water resistant finish. Stainless steel turn handle and fully gasketed.



1463

AUTOMATED EXTERNAL DEFIBRILLATORS: LS-AED SERIES

All Defibrillators Meet Local and National Standards for Emergency Care in Public Places and are FDA-Approved. JL has Several Models Available Which All Feature Automatic Heartbeat Detection, Require Minimum Training to Operate and Include a Training Video.

This AED cabinet is "semi-recessed" which means it will need to be installed into a cut out in a wall (no electrical needed). Once installed the cabinet will extend from the surface of the wall 3 inches with 3 and ¾ inches of the cabinets depth housed inside the wall.

METAL AED CABINET OPTIONS AND ACCESSORIES

Siren Strobe Alarm and 85 db Alarm for 3" and surf mtd.(9V battery) (SA)
Alarm Connectivity Switch: Magnetic Door contact (14MAG) or Roller Reed Contact (14RR).
Optimal door styles - most FEC styles available.
Saf-T-Clasp for Visual Notification if Door has been Opened (14STC)
Custom Door Graphics
AED Wall Signs
Architectural Bronze or Brass
Custom Sizes & Paint Colors
Fire-Rated Recessed Cabinet - FX2

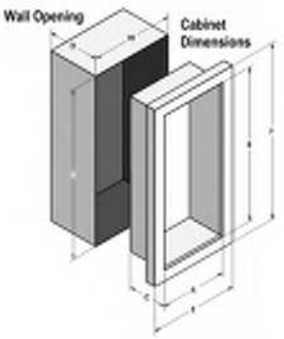

Lifestart Series for Any Brand AED

Trim and Door Material and Series #				Tub I.D.			Frame O.D.		Wall Opening Non-Rated			Wall Opening Fire-Rated Option		
Steel	Aluminum	Stainless Steel	Trim Style	A	B	C	E	F	W	H	D	W	H	D
1415F12	1425F12	1435F12	3/8 Flat Trim	14	14	6 3/4	17 3/8	17 3/8	15 1/4	15 1/4	6 1/2	16 5/16	16 5/16	7 11/16
1416F12	1426F12	1436F12	1 1/2 Square	14	14	6 3/4	17 3/8	17 3/8	15 1/4	15 1/4	5 7/8	16 5/16	16 5/16	6 7/16
1417F12	1427F12	1437F12	3or 2 1/2"Rolled	14	14	6 3/4	17 3/8	17 3/8	15 1/4	15 1/4	3 3/4*	16 5/16	16 5/16	4 15/16*
1413F12	1423F12	1439F12	Surf. Mtd.	17 3/16	17 3/16	7	17 3/8	17 3/8	–	–	–	–	–	–
Dimensions in Inches														

* MODEL 1427 HAS 2-1/2" TRIM & REQUIRES 5/8" DEEPER WALL OPENING

The New Side-by-Side Olympus Series for AED & Extinguisher or Oxygen

Trim and Door Material and Series #				Tub I.D.			Frame O.D.		Wall Opening Non-Rated			Wall Opening Fire-Rated Option		
Steel	Aluminum	Stainless Steel	Trim Style	W	H	D	E	F	W	H	D	W	H	D
1915F12	1925F12	1935F12	3/8 Flat Trim	18	18	8	21 3/8	21 3/8	19	19	8	20 5/16	20 5/16	8 15/16
1916F12	1926F12	1936F12	1 1/2 Square	18	18	8	21 3/8	21 3/8	19	19	6 7/8	20 5/16	20 5/16	7 11/16
1917F12	1927F12	1937F12	3 Rolled	18	18	8	21 3/8	21 3/8	19	19	5 3/4*	20 5/16	20 5/16	6 3/16*
1913F12	1923F12	1939F12	Surf. Mtd.	21 3/16	21 3/16	8 1/2	21 3/8	21 1/8	–	–	–	–	–	–
Dimensions in Inches														

* MODEL 1927 HAS 2-1/2" TRIM & REQUIRES 5/8" DEEPER WALL OPENING

© 2018 ACTIVAR CONSTRUCTION PRODUCTS GROUP, INC.

INSTALLATION INSTRUCTIONS: LIFESTART® AED CABINETS

SURFACE MOUNT METAL OR WOOD FRAMING:

1. Remove all hardware and glazing, unlock cabinet if provided.
2. Use holes provided in back wall of cabinet tub for attaching to studding. If wall configuration does not allow for that, then follow step 2 below; otherwise, skip to step 4. Hollow wall anchors may be used in a maximum of (2) positions. The other two must be firmly anchored in framing members.
3. [Drilling Additional Holes] Drill (2) 1/8" holes through back wall of tub that correspond to location of framing members.
4. Place cabinet in position, attach with Universal # 10 x 1-1/2" self-drilling screws.
5. Check cabinet door for freedom of movement. If it binds, shim as necessary to remove any racking of tub attachments or studding.

RECESSED METAL OR WOOD FRAMING:

1. Install a framed opening above, below and at both sides of cabinet opening at specified location. Wall opening width, height and depth must correspond with dimensions indicated in catalog or detail and submittal sheet.
2. Use holes provided in cabinet tub for attaching to studding. If wall configuration does not allow for that, then follow step 3 below; otherwise, skip to step 4.
3. [Drilling Additional Holes] Drill (2) 1/8" holes through tub on each side of cabinet.
4. Place cabinet in position, attach with Universal # 10 x 1-1/2" self-drilling screws.
5. Check cabinet door for freedom of movement. If it binds, shim as necessary to remove any racking of tub attachments or studding.

MASONRY:

1. Leave or create an opening in the masonry wall at specified location. Wall opening width, height and depth must correspond with dimensions indicated in catalog or detail and submittal sheet.
2. Use holes provided in cabinet tub for attaching to studding. If wall configuration does not allow for that, then follow step 3 below; otherwise, skip to step 4.
3. [Drilling Additional Holes] Drill (2) 1/8" holes through tub on each side of cabinet.
4. Place cabinet in position and mark location of attachments on masonry using 1/8" holes as marking guides.
5. Remove cabinet and drill appropriately sized holes for your masonry anchors into masonry at marked points, and install anchors.
6. Place cabinet in position and attach with screws into masonry anchors.
7. Check cabinet door for freedom of movement. If it binds, shim as necessary to remove any racking of tub attachments or studding.

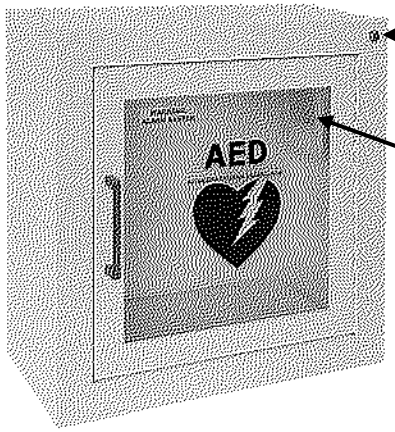

ON/OFF Key Switch Located on Front or Side of Cabinet

Alarm compartment 9-volt battery located inside

INSTALL GLAZING, HANDLE AND ALARMS:

1. Remove protective plastic from plexiglass or glass and install decal if intended for glass.
2. Align glazing on inside of door, holding in place while installing glass mounting clips on inside of door with sheet metal screws. (2) glass clips are provided for each side of door. Mounting holes are provided. Do not over-tighten.
3. Install handle with machine thread screws and roller catch or SAF-T-LOK™ in door.
4. Commander alarm is pre-installed in cabinet. See page 2 for operating instructions.

See photos below for more details of installing door components.

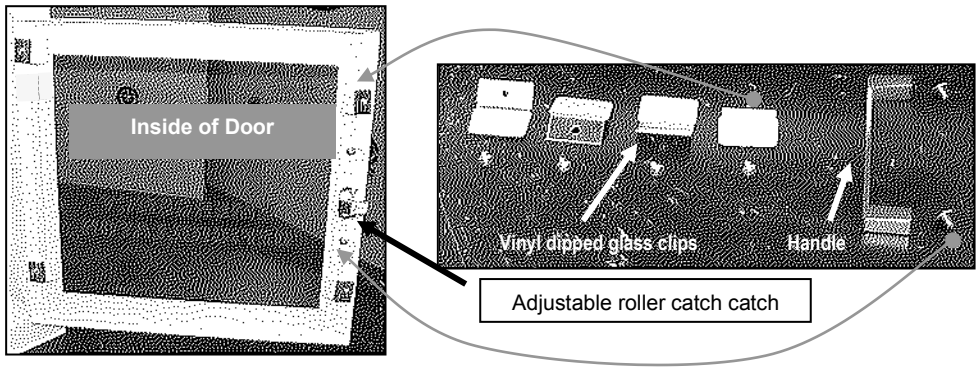

JL INDUSTRIES

ACTIVAR INC. www.activarcpg.com Construction Products Group

SEE SEPARATE FIRE-RATED INSTALLATION INSTRUCTIONS FOR FIRE-RATED CABINETS

Copyright 2015 Activar

14I-REV B

HEADQUARTERS & JL:4450 WEST 78TH ST CIRCLE, BLOOMINGTON, MN 55435-5416 **PH**: 800-554-6077 **FAX:** 952-835-2218 **EMAIL:** SALES@ACTIVARCPG.COM **WWW.ACTIVARCPG.COM** 8/21/15
ACPG WEST COAST/SAMSON: COMMERCE CA **ACPG WAREHOUSES**: FORT MYERS FL, ATLANTA GA, LANCASTER PA, DALLAS TX, COMMERCE CA , CHICAGO IL, SEATTLE WA, FARGO ND, OMAHA NE

INSTALLATION INSTRUCTIONS: LIFESTART® AED CABINETS

COMMANDER ALARM OPERATING INSTRUCTIONS & TROUBLE SHOOTING GUIDE

AED cabinets comes standard with a 9-volt battery operated “Commander Alarm” and 2 keys that turn the alarm on or off. Alarm controller is a chrome key switch that is located on the exterior of the cabinet—either the front or the side.

Alarm Operation

1. Key in the vertical (Off) position alarm will not sound
2. Key in the horizontal (On) position - Door is opened - Alarm will sound – Close to stop alarm.
3. Key switch is turned to the vertical (Off) position when the door is opened – The Alarm will stop.

Maintenance

Replace 9-Volt battery yearly or as needed. Open alarm compartment by twisting the key or a coin inserted into the slot at the top of the unit.

Trouble Shooting Guide

1. Alarm Key Switch On – Door Open – Alarm Not Sounding: Change Battery
2. Alarm Key Switch On – Door Closed – Alarm Continues to Sound: Test by opening door & pushing in the plunger switch with finger, then turn on the alarm. If alarm does not come on until you release the plunger switch, Reposition the alarm compartment.

Detail of Alarm Compartment



Fire-Rated Wall Note:
See separate installation instructions for Fire-rated cabinets.

8570d

Welch Allyn®



Welch Allyn
Green Series™ Medical Exam Lighting

Welch Allyn
Green Series
Medical Exam Lighting



Whiter, brighter and greener.

Welch Allyn Green Series Medical Exam Lights provide a brighter, whiter light and consume less energy than traditional halogen lights. See true tissue color within a well-defined lit field during an exam or procedure while also reducing your cost of ownership.



LED VS. HALOGEN





Whiter and brighter to help enhance patient exams

> 5,500° K provides true tissue color rendition
> Focused light provides uniform spot—no dark or hot spots—with crisp edges
> Industry-leading lumen performance provides bright light

Greener, for a low cost of ownership

> LEDs provide long life
> No bulb replacement
> Consume less energy

Designed with patient safety and satisfaction in mind

> Touchless controls to reduce your contact, to help reduce risk of cross-contamination
> Ergonomic design that is easy to clean
> Minimal heat dissipation to enhance patient comfort and safety
> Use with Welch Allyn Disposable Sheaths to further help reduce risk of cross-contamination

Welch Allyn Green Series Medical Headlights







GS Portable Headlight

> Ideal for general examination, minor suturing and foreign body removal
> Weighs only 4 ounces, and choice of rigid or terrycloth headband for maximum comfort
> Well-defined, shadow-free illumination with coaxial luminaire
> Rechargeable batteries within headband provide complete portability
> LED provides up to 10,000 hours of life
> 60 minutes of continuous run-time on fully charged battery

GS Procedure Headlight

> Ideal for foreign body removal, OB/GYN and dermatology applications and procedures or any procedure, that requires a small, bright spot
> Weighs only 6 ounces, providing maximum comfort
> Well-defined, shadow-free illumination with coaxial luminaire
> Use with a direct power supply or rechargeable battery for portability
> LED provides up to 50,000 hours of life
> 60 minutes of continuous run-time on fully charged battery

Welch Allyn Green Series Medical Exam and Procedure Lights



GS Exam Light IV

GS Exam Light IV

8570d

> Perfect for the OB/GYN office or for specialties that require very focused light in specific areas
> One LED with 3X the typical light output than halogen
> Highly flexible light pipe that is twice as long as conventional pipes with a compact, unobtrusive head that ensures pinpoint accuracy



GS 300 General Exam Light

GS 300 General Exam Light

> Ideal for primary care facilities, emergency rooms, outpatient facilities and dermatology
> One LED provides the perfect combination of intense light output and cool operation, all delivered in a compact design
> Affordable price and rugged performance



GS 600 Minor Procedure Light

GS 600 Minor Procedure Light

> Ideal for minor procedures and exams in any healthcare environment
> Touchless intensity controls provide the output you need, when you need it
> Features 3 LEDs and a wider head specifically for demanding viewing conditions that require exceptionally good light

GS 900 Procedure Light

> Perfect for minor procedures/procedures in the hospital, ambulatory care center, outpatient facility or physician's office
> Features 6 LEDs with intensity controls, outstanding durability, extraordinary maneuverability and unparalleled spot quality
> Ceiling mount option gives ability to maximize floor space and direct light wherever it is needed during a procedure



GS 900 Procedure Light

A VARIETY OF MOUNTING OPTIONS AVAILABLE:

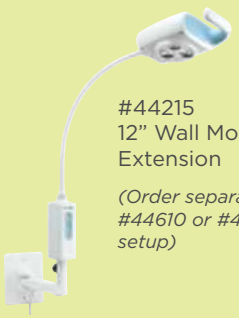

#44215
12" Wall Mount Extension

(Order separately with #44610 or #44410 for setup)



24" High Standard Stand

(shipped with #44400 or #44600)

8570d stand required

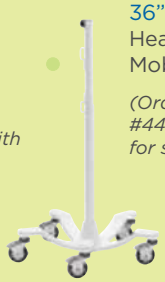

36" High #48960 Heavy Duty/Tall Mobile Stand

(Order separately with #44610 or #44410 for setup)

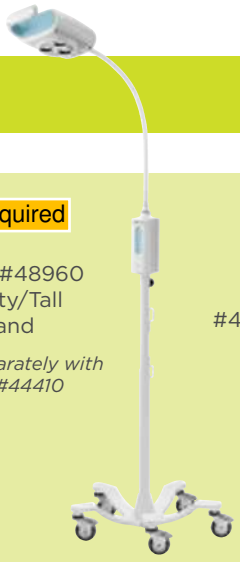

#44900

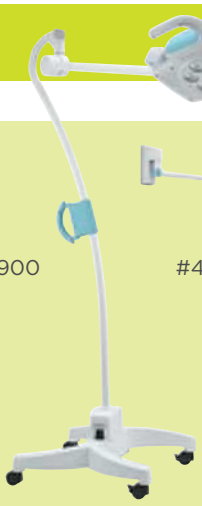

#44900-W

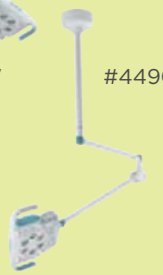

#44900-C

PRODUCT AND ACCESSORY ORDERING INFORMATION

GS Exam Light IV

48810	GS Exam Light IV with Table/Wall Mount
48950	Mobile Stand for GS Exam Light IV
52640	Disposable Sheath for GS Exam Light IV (25/box, 5 boxes/case)
48810-M3001	GS Exam Light IV with Midmark® Bracket for Tables 204, 222, 223, 604, 622, 623, 625
48810-M4001	GS Exam Light IV with Midmark Bracket for Tables 230, 630, 641, 646, 647

GS 300 General Exam Light

44400	GS 300 General Exam Light with Mobile Stand
44410	GS 300 General Exam Light with Table/ Wall Mount
44215	12" Wall Mount Extension
48960	Heavy Duty/Tall Mobile Stand

GS 600 Minor Procedure Light

44600	GS 600 Minor Procedure Light with Mobile Stand
44610	GS 600 Minor Procedure Light with Table/ Wall Mount
44215	12" Wall Mount Extension
48960	Heavy Duty/Tall Mobile Stand
52630	Disposable Sheath for GS 600/GS 900 (50/box, 5 boxes/case)

GS 900 Procedure Light

44900	GS 900 Procedure Light with Mobile Stand
44900-C	GS 900 Procedure Light with Ceiling Mount
44900-W	GS 900 Procedure Light with Wall Mount
52630	Disposable Sheath for GS 600/GS 900 (50/box, 5 boxes/case)

GS Portable Headlight

46070R	GS Portable Headlight with Rigid Headband and Direct Power Supply/ Charger
46070	GS Portable Headlight with Terrycloth Headband and Direct Power Supply/ Charger

GS Procedure Headlight

49020	GS Procedure Headlight with Direct Power Supply
75260	GS Procedure Headlight Battery Pack with Charger

SPECIFICATIONS

	GS Exam Light IV	GS 300	GS 600	GS 900	GS Portable Headlight	GS Procedure Headlight
Number of LEDs	1 White LED	1 White LED	3 White LEDs	6 White LEDs	LED	LED
Color Temperature	5,500° K	5,500° K	5,500° K	5,500° K	5,300° K	5,700° K
Light Intensity @ Typical Working Distance	20,000 lux (1,858 footcandles)	12" distance: 30,000 lux (2,787 footcandles) 20" distance: 15,000 lux (1,393 footcandles)	High Intensity Setting: 12" distance: 75,000 lux (6,967 footcandles) 20" distance: 40,000 lux (3,716 footcandles) Low Intensity Setting: 12" distance: 55,000 lux (5,109 footcandles) 20" distance: 30,000 lux (2,787 footcandles)	High Intensity Setting: 24" distance: 100,000 lux (9,290 footcandles) 40" distance: 55,000 lux (5,109 footcandles) Low Intensity Setting: 24" distance: 75,000 lux (6,967 footcandles) 40" distance: 40,000 lux (3,716 footcandles)	2,000 lux, 40 lumens	9,000 lux, 120 lumens
LED Life	50,000 hours	50,000 hours	50,000 hours	50,000 hours	10,000 hours	50,000 hours
Working Distance	16 in (40 cm)	12 in (30.5 cm) to 20 in (50 cm)	12 in (30.5 cm) to 20 in (50 cm)	24 in (60.9 cm) to 40 in (100 cm)	16 in (40 cm)	18 in (46 cm)
Spot Size at Working Distance	4 in (10 cm) to 10 in (25 cm)	5 in (13 cm) to 6 in (15 cm)	6 in (15 cm) to 7 in (18 cm)	9 in (23 cm) to 10 in (25 cm)	4 in (10 cm) to 8 in (20 cm)	1 in (2.5 cm) to 6 in (15 cm)
Electrical	Input: 100-240 V~ 50 Hz-60 Hz, 0.30 A max	Input: 100-240 V~ 50 Hz-60 Hz, 0.35 A max	Input: 100-240 V~ 50 Hz-60 Hz, 0.65 A max	Input: 100-240 V~ 50 Hz-60 Hz, 1.00 A max	100-240 V~ 50 Hz-60 Hz, 0.2 A max	100-240 V~ 50 Hz-60 Hz, 0.2 A max
Power Cord	#18 AWG, 3-wire grounded cord set, 8' (2.5 m) long	#18 AWG, 3-wire grounded cord set, 8' (2.5 m) long	#18 AWG, 3-wire grounded cord set, 8' (2.5 m) long	#18 AWG, 3-wire grounded cord set, 8' (2.5 m) long		
Weight	Total Table/Wall Mount: 5.30 lbs (2.40 kg) Total Mobile Stand: 12.40 lbs (5.63 kg)	Total Table/Wall Mount: 5.65 lbs (2.56 kg) Total Mobile Stand: 12.75 lbs (5.78 kg)	Total Table/Wall Mount: 6.45 lbs (2.93 kg) Total Mobile Stand: 17.35 lbs (7.87 kg)	Total Wall Mount: 17.90 lbs (8.12 kg) Total Mobile Stand: 44.85 lbs (20.34 kg) Total Ceiling Mount: 2 4.50 lbs (11.11 kg)	4 ounces (113 g)	6 ounces (170 g)
Mounting Options	Table/Wall Mount Mobile Stand	Table/Wall Mount Mobile Stand	Table/Wall Mount Mobile Stand	Wall Mount, Mobile Stand, Ceiling Mount	Head Mount-Terrycloth or Rigid Headband	Head Mount-Rigid Headband
Accessory Options	Disposable Sheath #52640	NA	Disposable Sheath #52630	Disposable Sheath #52630	Soft Case #05232-U	Carrying Case #49099, Battery Pack with Charger #75260
Warranty	5-year limited	5-year limited	5-year limited	5-year limited	1-year limited	1-year limited

For more information about Green Series Medical Exam Lighting, please contact your Welch Allyn representative, or visit welchallyn.com/greenseries.

Welch Allyn, Inc.
4341 State Street Road
Skaneateles Falls, NY 13153 USA
(p) 800.535.6663 (f) 315.685.3361

WWW.WELCHALLYN.COM

© 2016 Welch Allyn MC13577 80021040 Ver A 2016-10

ENERGY STAR PARTNER

Welch Allyn®



Appendix A: Specifications

Charging station power supply classification: US, Canada, & International; Class I and internally powered

Characteristic	Specification
Input	100-240v / 50-60Hz 160-80 mA
Output	5v DC 1400 mA
Category	Not AP/APG Equipment

Physical specifications

Characteristic	Specification
Illuminator	1.96 W x 1.37 D x 3.74 H in; 50 W x 35 D X 95 H mm
Charger	3.14 x 4.33 x 2.55-4.60 in; 80 W x 110 D X 65-117 H mm
Power supply	1.24 W x 2.16 L x 1.61 D in; 31.5 W x 55 L x 41 D mm
LED radiation output	<6.67mW at 400-750 wavelengths
Battery cell	Capacity 400mAh Voltage 3.7 V Chemistry Li-Ion Polymer Rechargeable Li-Ion Polymer Battery Charge time 4 hours On-Time use 80 minutes

Environment (temperature and humidity)

Characteristic	Specification

8705

PHYSIO CONTROL

PRODUCT BROCHURE



LIFEPAK® 15 MONITOR/DEFIBRILLATOR

For Emergency Medical Services

SPECIFICATIONS

GENERAL

The LIFEPAK 15 monitor/defibrillator has six main operating modes:

AED Mode: for automated ECG analysis and a prompted treatment protocol for patients in cardiac arrest.

Manual Mode: for performing manual defibrillation, synchronized cardioversion, noninvasive pacing, and ECG and vital sign monitoring.

Archive Mode: for accessing stored patient information.

Setup Mode: for changing default settings of the operating functions.

Service Mode: for authorized personnel to perform diagnostic tests and calibrations.

Demo Mode: for simulated waveforms and trend graphs for demonstration purposes.

PHYSICAL CHARACTERISTICS

Weight:

Basic monitor/defibrillator with new roll paper and two batteries installed: 7.9 kg (17.5 lb)

Fully featured monitor/defibrillator with new roll paper and two batteries installed: 8.4 kg (18.5 lb)

Lithium-ion battery: ≤0.6kg (1.3lb)

Accessory Bags and Shoulder Strap: 1.77 kg (3.9 lb)

Standard (hard) Paddles: 0.95 kg (2.1 lb)

Height: 31.7 cm (12.5 in)

Width: 40.1 cm (15.8 in)

Depth: 23.1 cm (9.1 in)

DISPLAY

Size (active viewing area): 212 mm (8.4 in) diagonal; 171 mm (6.7 in) wide x 128 mm (5.0 in) high

Resolution: display type 640 dot x 480 dot color backlit LCD

User Selectable Display Mode: full color or SunVue™ display high contrast

Display: a minimum of 5 seconds of ECG and alphanumerics for values, device instructions, or prompts

Display: up to three waveforms

Waveform Display Sweep Speed: 25 mm/sec for ECG, $Sp0_2$, IP, and 12.5 mm/sec for CO_2

DATA MANAGEMENT

The device captures and stores patient data, events (including waveforms and annotations), and continuous waveform and patient impedance records in internal memory.

The user can select and print reports, and transfer the stored information via supported communication methods.

Report Types:

- Three format types of CODE SUMMARY™ critical event record: short, medium, and long
- 12-lead ECG with STEMI statements
- Continuous Waveform (transfer only)
- Trend Summary
- Vital Sign Summary
- Snapshot

Memory Capacity: Total capacity is 360 minutes of continuous ECG, 90 minutes of continuous data from all channels, or 400 single waveform events.

Maximum memory capacity for a single patient includes up to 200 single waveform reports and 90 minutes of continuous ECG.

COMMUNICATIONS

The device is capable of transferring data records by wired or wireless connection. This device complies with Part 15 of the FCC rules, and its operation is subject to the following two conditions: (1) this device may not cause harmful interference, and (2) this device must accept any interference received, including interference that may cause undesired operation.

Serial Port RS232 communication + 12V available

Limited to devices drawing maximum 0.5 A current

Bluetooth® technology provides short-range wireless communication with other Bluetooth-enabled devices

MONITOR

ECG

ECG is monitored via several cable arrangements:

A 3-wire cable is used for 3-lead ECG monitoring.

A 5-wire cable is used for 7-lead ECG monitoring.

A 10-wire cable is used for 12-lead ECG acquisition. When the chest electrodes are removed, the 10-wire cable functions as a 4-wire cable.

Standard paddles or QUIK-COMBO pacing/defibrillation/ECG electrodes are used for paddles lead monitoring.

Frequency Response:

Monitor: 0.5 to 40 Hz or 1 to 30 Hz

Paddles: 2.5 to 30 Hz

12-lead ECG diagnostic: 0.05 to 150 Hz

Lead Selection:

Leads I, II, III, (3-wire ECG cable)

Leads I, II, III, AVR, AVL, and AVF acquired simultaneously (4-wire ECG cable)

Leads I, II, III, AVR, AVL, AVF, and C lead acquired simultaneously (5-wire ECG cable)

Leads I, II, III, AVR, AVL, AVF, V1,V2,V3,V4,V5, and V6 acquired simultaneously (10-wire ECG cable)

ECG size: 4, 3, 2.5, 2, 1.5, 1, 0.5, 0.25 cm/mV (fixed at 1 cm/mV for 12-lead)

Heart Rate Display:

20–300 bpm digital display

Accuracy: ±4% or ±3 bpm, whichever is greater

QRS Detection Range Duration: 40 to 120 msec

Amplitude: 0.5 to 5.0 m

Common Mode Rejection (CMRR): ECG Leads: 90 dB at 50/60 Hz

$Sp0_2$/SpCO/SpMet

Sensors:

MASIMO® sensors including RAINBOW® sensors

NELLCOR® sensors when used with the MASIMO RED™ MNC adapter

$Sp0_2$

Displayed Saturation Range: "<50" for levels below 50%; 50 to 100%

Saturation Accuracy: 70–100% (0–69% unspecified)

Adults/Pediatrics:
±2 digits (during no motion conditions)
±3 digits (during motion conditions)

Dynamic signal strength bar graph

Pulse tone as $Sp0_2$ pulsations are detected

$Sp0_2$ Update Averaging Rate User selectable: 4, 8, 12 or 16 seconds

$Sp0_2$ Sensitivity User selectable: Normal, High

$Sp0_2$ Measurement: Functional $Sp0_2$ values are displayed and stored

Pulse Rate Range: 25 to 240 bpm

Pulse Rate Accuracy (Adults/Pediatrics):
±3 digits (during no motion conditions)
±5 digits (during motion conditions)

Optional $Sp0_2$ waveform display with autogain control

SpCO®

SpCO Concentration Display Range: 0 to 40%

SpCO Accuracy: ±3 digits

SpMET®

SpMet Saturation Range: 0 to 15.0%

SpMet Display Resolution: 0.1% up to 10%

SpMet Accuracy: ±1 digit

NIBP

Blood Pressure Systolic Pressure Range: 30 to 255 mmHg

Diastolic Pressure Range: 15 to 220 mmHg

Mean Arterial Pressure Range: 20 to 235 mmHg

Units: mmHg

Blood Pressure Accuracy: ±5 mmHg

Blood Pressure Measurement Time: 20 seconds, typical (excluding cuff inflation time)

Pulse Rate Range: 30 to 240 pulses per minute

Pulse Rate Accuracy: ±2 pulses per minute or ±2%, whichever is greater

Operation Features Initial Cuff Pressure: User selectable, 80 to 180 mmHg

Automatic Measurement Time Interval: User selectable, from 2 min to 60 min

Automatic Cuff Deflation Excessive Pressure: If cuff pressure exceeds 290 mmHg

Excessive Time: If measurement time exceeds 120 seconds

CO_2

CO_2 Range: 0 to 99 mmHg (0 to 13.2 kPa)

Units: mmHg, %, or kPa

Respiration Rate Accuracy:
0 to 70 bpm: ±1 bpm
71 to 99 bpm: ±2 bpm

Respiration Rate Range: 0 to 99 breaths/minute

Rise Time: 190 msec

Response Time: 3.3 seconds (includes delay time and rise time)

Initialization Time: 30 seconds (typical), 10-180 seconds

Ambient Pressure: automatically compensated internally

Optional Display: CO_2 pressure waveform

Scale factors: Autoscale, 0–20 mmHg (0–4 Vol%), 0–50 mmHg (0–7 Vol%), 0–100 mmHg (0–14 Vol%)

Invasive Pressure

Transducer Type: Strain-gauge resistive bridge

Transducer Sensitivity: 5µV/V/mmHg

Excitation Voltage: 5 Vdc

Connector: Electro Shield: CXS 3102A 14S-6S

Bandwidth: Digital filtered, DC to 30 Hz (< -3db)

Zero Drift: 1 mmHg/hr without transducer drift

Zero Adjustment: ±150 mmHg including transducer offset

Numeric Accuracy: ±1 mmHg or 2% of reading, whichever is greater, plus transducer error

Pressure Range: -30 to 300 mmHg, in six user selectable ranges

Invasive Pressure Display

Display: IP waveform and numerics

Units: mmHg

Labels: P1 or P2, ART, PA, CVP, ICP, LAP (user selectable)

Temperature

Range: 24.8° to 45.2°C (76.6° to 113.4°F)

Resolution: 0.1°C

Accuracy: ±0.2°C including sensor

Reusable Temperature Cable: 5 foot or 10 foot

Disposable Sensor Types: Surface–Skin; Esophageal/Rectal

Trend

Time Scale: Auto, 30 minutes, 1, 2, 4, or 8 hours

Duration: Up to 8 hours

ST Segment: After initial 12-lead ECG analysis, automatically selects and trends ECG lead with the greatest ST displacement

Display Choice of: HR, PR (SpO_2), PR (NIBP), SpO_2 (%), SpCO (%), SpMet (%), CO_2 ($EtCO_2$/$FiCO_2$), RR (CO_2), NIBP, IP1, IP2, ST

ALARMS

Quick Set: Activates alarms for all active vital signs

VF/VT Alarm: Activates continuous (CPSS) monitoring in Manual mode

Apnea Alarm: Occurs when 30 seconds has elapsed since last detected respiration

Heart Rate Alarm Limit Range: Upper, 100–250 bpm; lower, 30–150 bpm

INTERPRETIVE ALGORITHM

12-Lead Interpretive Algorithm: University of Glasgow 12-Lead ECG Analysis Program, includes AMI and STEMI statements

PRINTER

Prints continuous strip of the displayed patient information and reports

Paper Size: 100 mm (3.9 in)

Print Speed: 25 mm/sec or 12.5 mm/sec

Optional: 50 mm/sec time base for 12-lead ECG reports

Delay: 8 seconds

Autoprint: Waveform events print automatically

Frequency Response:

Diagnostic: 0.05 to 150 Hz or 0.05 to 40 Hz

Monitor: 0.67 to 40 Hz or 1 to 30 Hz

DEFIBRILLATOR

Biphasic Waveform: Biphasic Truncated Exponential

The following specifications apply from 25 to 200 ohms, unless otherwise specified:

Energy Accuracy: ±1 joule or 10% of setting, whichever is greater, into 50 ohms, ±2 joules or 15% of setting, whichever is greater, into 25-175 ohms.

Voltage Compensation: Active when disposable therapy electrodes are attached. Energy output within ±5% or ±1 joule, whichever is greater, of 50 ohms value, limited to the available energy which results in the delivery of 360 joules into 50 ohms.

Paddle Options: QUIK-COMBO® pacing/defibrillation/ECG electrodes (standard). Cable Length 8 foot long (2.4 m) QUIK-COMBO cable (not including electrode assembly).

Standard paddles (optional)

Manual Mode

Energy Select: 2, 3, 4, 5, 6, 7, 8, 9, 10, 15, 20, 30, 50, 70, 100, 125, 150, 175, 200, 225, 250, 275, 300, 325, and 360 joules

Charge Time: Charge time to 360 joules in less than 10 seconds, typical

Synchronous Cardioversion: Energy transfer begins within 60 msec of the QRS peak

Paddles Leads OFF Sensing: When using QUIK-COMBO electrodes, the device indicates Paddles Leads OFF if the resistive part of the patient impedance is greater than 300 ±15% ohms, or if the magnitude of the patient impedance is greater than 440 ±15% ohms.

AED Mode

Shock Advisory System™ (SAS): an ECG analysis system that advises the operator if the algorithm detects a shockable or non-shockable ECG rhythm. SAS acquires ECG via therapy electrodes only.

Shock Ready Time: Using a fully charged battery at normal room temperature, the device is ready to shock within 20 seconds if the initial rhythm finding is "SHOCK ADVISED"

Biphasic Output: Energy Shock levels ranging from 150–360 joules with same or greater energy level for each successive shock

cprMAX™ Technology: In AED mode, cprMAX™ technology provides a method of maximizing the CPR time that a patient receives, with the overall goal of improving the rate of survival of patients treated with AEDs.

Setup Options:

- Auto Analyze: Allows for auto analysis. Options are OFF, AFTER 1ST SHOCK
- Initial CPR: Allows the user to be prompted for CPR for a period of time prior to other activity. Options are OFF, ANALYZE FIRST, CPR FIRST
- Initial CPR Time: Time interval for Initial CPR. Options are 15, 30, 45, 60, 90, 120, and 180 seconds.
- Pre-Shock CPR: Allows the user to be prompted for CPR while the device is charging. Options are OFF, 15, 30 seconds.
- Pulse Check: Allows the user to be prompted for a pulse check at various times. Options are ALWAYS, AFTER EVERY SECOND NSA, AFTER EVERY NSA, NEVER
- Stacked Shocks: Allows for CPR after 3 consecutive shocks or after a single shock. Options are OFF, ON
- CPR Time: 1 or 2 User selectable times for CPR. Options are 15, 30, 45, 60, 90, 120, 180 seconds and 30 minutes.

PACER

Pacing Mode: Demand or non-demand rate and current defaults

Pacing Rate: 40 to 170 PPM

Rate Accuracy: ±1.5% over entire range

Output Waveform: Monophasic, truncated exponential current pulse (20 ± 1 ms)

Output Current: 0 to 200 mA

Pause: Pacing pulse frequency reduced by a factor of 4 when activated

Refractory Period: 180 to 280 msec (function of rate)

ENVIRONMENTAL

Unit meets functional requirements during exposure to the following environments unless otherwise stated.

Operating Temperature: 0° to 45°C (32° to 113°F); -20°C (-4°F) for 1 hour after storage at room temperature; 60°C (140°F) for 1 hour after storage at room temperature

Storage Temperature: -20° to 65°C (-4° to 149°F) except therapy electrodes and batteries

Relative Humidity, Operating: 5 to 95%, non-condensing. NIBP: 15 to 95%, non-condensing

Relative Humidity, Storage: 10 to 95%, non-condensing

Atmospheric Pressure, Operating: -382 to 4,572 m (-1,253 to 15,000 ft). NIBP: -152 to 3,048 m (-500 to 10,000 ft)

Water Resistance, Operating: IP44 (dust and splash resistance) per IEC 529 and EN 1789 (without accessories except for 12-lead ECG cable, hard paddles, and battery pack)

Vibration: MIL-STD-810E Method 514.4, Propeller Aircraft - category 4 (figure 514.4-7 spectrum a), Helicopter - category 6 (3.75 Grms), Ground Mobile - category 8 (3.14 Grms), EN 1789: Sinusoidal Sweep, 1 octave/min, 10-150 Hz, ±0.15 mm/2 g

Shock (drop): 5 drops on each side from 18 inches onto a steel surface EN 1789: 30-inch drop onto each of 6 surfaces

Shock (functional): Meets IEC 60068-2-27 and MIL-STD-810E shock requirements 3 shocks per face at 40 g, 6 ms half-sine pulses

Bump: 1000 bumps at 15 g with pulse duration of 6 msec

Impact, Non-operating: EN 60601-1 0.5 + 0.05 joule impact UL 60601-1 6.78 Nm impact with 2-inch diameter steel ball. Meets IEC62262 protection level IK 04.

EMC: EN 60601-1-2:2006 Medical Equipment -General Requirements for Safety - Collateral Standard: Electromagnetic Compatibility - Requirements and Tests EN 60601-2-4:2003: (Clause 36) Particular Requirements for the Safety of Cardiac Defibrillators and Cardiac Defibrillator-Monitors

Cleaning: Cleaning 20 times with the following: Quaternary ammonium, isopropyl alcohol, hydrogen peroxide

Chemical Resistance: 60 hour exposure to specified chemicals: Betadine (10% Povidone-Iodine solution), Coffee, Cola, Dextrose (5% Glucose solution), Electrode Gel/Paste (98% water, 2% Carbopol 940), HCL (0.5% solution, pH=1), Isopropyl Alcohol, NaCl solution (0.9% solution), Cosmetic discoloration of the paddle well shorting bar shall be allowed following exposure to HCL (0.5% solution).

POWER

Power Adapters: AC or DC

Power Adapters provide operation and battery charging from external AC or DC power

- Full functionality with or without batteries when connected to external AC/DC
- Typical battery charge time while installed in LIFEPAK 15 device is 190 minutes
- Indicators: external power indicator, battery charging indicator

Dual battery: Capability with automatic switching

Low battery indication and message: Low battery fuel gauge indication and low battery message in status area for each battery

Replace battery indication and message: Replace battery fuel gauge indication, audio tones and replace battery message in the status area for each battery. When replace battery is indicated, device auto-switches to second battery. When both batteries reach replace battery condition, a voice prompt instructs user to replace battery.

Battery Capacity For two, new fully-charged batteries, 20°C (68°F)

Operating Mode		Monitoring (minutes)	Pacing (minutes)	Defibrillation (360J discharges)
Total Capacity to Shutdown	Typical	360	340	420
	Minimum	340	320	400
Capacity After Low Battery	Typical	21	20	30
	Minimum	12	10	6

BATTERY

Battery Specifications

Battery Type: Lithium-ion

Weight: ≤0.6kg (1.3lb)

Charge Time (with fully depleted battery): 4 hours and 15 minutes (typical)

Battery indicators: Each battery has a fuel gauge that indicates its approximate charge. A fuel gauge that shows two or fewer LEDs after a charge cycle indicates that the battery should be replaced.

Charging Temperature Range: 5° to 45°C (41° to 113°F)

Operating Temperature Range: 0° to 45°C (32° to 113°F)

Short Term (<1 week) Storage Temperature Range: -20° to 60°C (-4° to 140°F)

Long Term (>1 week) Storage Temperature Range: 20° to 25°C (68° to 77°F)

Operating and Storage Humidity Range: 5 to 95% relative humidity, non-condensing

8705x

F6

Fetal & Maternal Monitor

Mounting Solutions



Trolley



Wall Mount

Specification

Physical Characteristics			Display Specifications	
Dimensions:	347mm x 330mm x 126mm	13.75"w x 13"d x5"h	Display:	10.1" color TFT-LCD
Weight:	Approx. 6 kg		Resolution:	RGB 800 (W) x480 (H)

Ultrasound		DECG	
Technique:	Ultrasound Pulse Doppler with autocorrelation	Technique:	Peak-peak detection technique
Pulse Repetition Rate:	2 KHz	DFHR Measurement Range:	30bpm ~ 240 bpm
Ultrasound Frequency:	(1.0±10%) MHz	Resolution:	1bpm
FHR Measurement Range:	50bpm ~ 240bpm	Accuracy:	±1 bpm
Resolution:	1bpm		
Accuracy:	±2 bpm		
/ob:	<10mW/cm^2		

TOCO		IUP	
TOCO Range:	0% ~ 100%	Pressure Range:	0 ~ 100mmHg
Non-linear Error:	≤ ±10%	Non-linear Error:	≤ ±3 mmHg
Resolution:	1%	Resolution:	1%
Zero Mode:	Automatic / Manual	Zero Mode:	Automatic/Manual

AFM		Recorder	
Technique:	Pulsed Doppler ultrasound	Recording Paper:	Z-fold, 150/152mm thermo-sensitive paper
Range:	0 ~ 100 (%)	Recording Speed:	1/2/3 cm/min, 25 mm/sec for history data
Resolution:	1%		

Power Supply	
Operating Voltage:	100 - 240V~
Operating Frequency:	50/60Hz
Battery:	14.8V/4400mAh rechargeable Li-ion battery

EDANUSA

4204 Jutland Drive,
Suite B, San Diego, CA 92117
Toll Free Phone Number:
888.850.4597

EDANUSA
www.edanusa.com

F6

Fetal & Maternal Monitor



8705x

F6

Fetal & Maternal Monitor





Foldable color TFT screen

F6 supports four viewing angles: 15°, 30°, 45°, 60°, that give better optic angles for care givers.



Quick setup and simplified workflow

Functional keys and knob provide various short-cuts to achieve functions for clinical use. The 'START' button could be configured to integrate patient info and printing. This could help the doctor to simplify the workflow and work with 1 button only.



Various printing options

F6 is compatible with 152 and 150 mm thermal printing paper in either American or International standard. The recording information includes patient info, FHR waveform, TOCO waveform, Fetal movement and so on.



Built-in Antepartum CTG Analysis

The antepartum CTG analysis provides objective and numerical assessment of CTG for the caregivers' reference and ensures easy access to read FHR patterns.

User-friendly design

- 10.1 foldable TFT color screen
- Compact and portable design
- Probe rack for easy positioning of the transducers

Easy to Read & Operate

- Numeric and waveform display of FHR and TOCO
- Simplified workflow with various short-cuts
- Easy to use menu system ensures fast access to important functions

Advanced FHR Detection Technology

- 1 MHz waterproof sensitive transducer
- Signals Overlap Verification to differentiate twins FHR
- FHR signal quality indicator helps optimize the probe position

Powerful Data Management

- 60 hours built-in memory for seamless monitoring
- MFM-CNS network for remote monitoring
- Insight software for data management



Lessons on Every Sound

Lesson are provided with every sound and accessed with a single keystroke. Lessons include discussion of the sound, schematic of the chest, phonocardiograms, questions and answers.

Thrills Palpated

Students palpate mumurs of Severe Aortic Stenosis and Ventricular Septal Defect to determine the grade of the murmur.

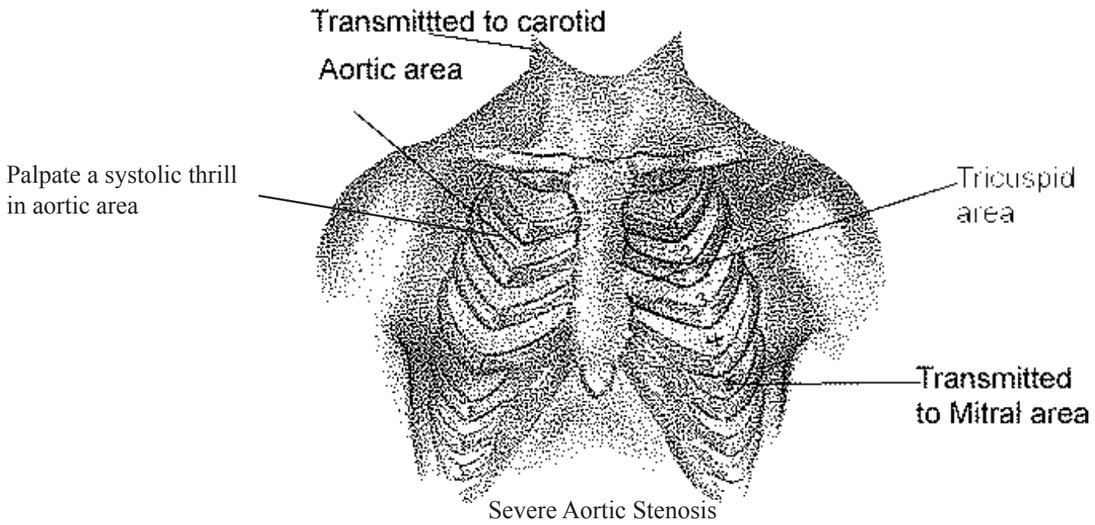

Preprogrammed Lectures

Instructors preprogram their lectures for a smoother presentation. Instructors have multiple lectures that can be edited, saved and recalled at any time.

Optional Items

- SAM On-Line (for student practice)
- SimulScope Bedside Auscultation System (group instruction)
- Arterial Pulse Training System

Ordering Information

Cat. No.	Description
718-9007	SAM Student Auscultation Manikin®
717-9000	SAM On-Line
718-7003	SimulScope® Bedside Auscultation System
718-0015	Classroom Infrared Emitter
718-4006	Auditorium Infrared Sound System
718-7040	HeartMan® Infrared Headphones
718-7000	E-Scope® Electronic Stethoscope
718-2700	CardioSim® VII Digital Sound Simulator
718-6200	PneumoSim™ Digital Breath Sound Sim.
711-9300	Clinical Heart Disease by Proctor Harvey, M.D.

Cardionics, Inc.
910 Bay Star Blvd., Webster, Texas 77598 USA
Telephone: 281-488-5901 Toll free US & Canada 800-364-5901 email: Info@Cardionics.com
Web site: www.cardionics.com

Part no. 018-9007
Printed 08/10

錫昌科技股份有限公司
KYS Technology
T 02-2911-5233
F 02-2911-6855
E info@kyst.com.tw

SAM II, the Student Auscultation Manikin

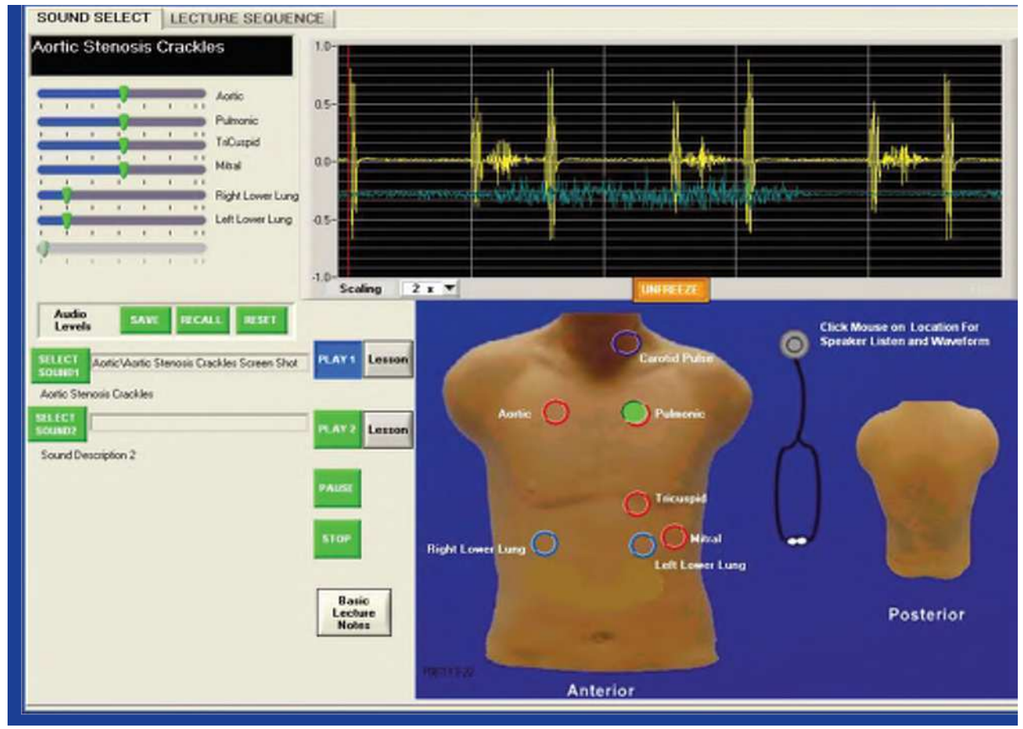

- **Sounds - 27 Heart, 21 Breath, 20 Bowel, 4 carotid bruits**
- **Listen with your own stethoscope at correct anatomical site**
- **Play Heart & Breath Sounds simultaneously or separately**
- **View phonocardiogram with every sound for easy identification of systolic and diastolic murmurs**
- **Instructors preprogram lectures for smoother presentation**
- **Test sounds included for assessment**
- **SAM On-Line available 24/7 students of SAM customers**

Teach and Test Assessment Skills

Cardionics
Leaders in Auscultation

® SAM Student Auscultation Manikin, CardioSim, SimulScope, HeartMan, E-Scope & Cardionics are registered trademarks of Cardionics, Inc., Webster,Texas.
™ PneumoSim is a trademank of Cardionics, Inc. Webster, Texas 77598.

SAM II, the Student Auscultation Manikin

8710



Phonocardiogram Displayed with Heart Sounds

Phonocardiographic Display.

SAM II presents a phonocardiogram with every heart sound. Instructors project the phonocardiogarms for full audience viewing. When heart and breath sounds are heard simultaneously, two channels are displayed.

Listen to SAM with Your Own Stethoscope

SAM presents 27 heart sounds, 21 breath sounds, 20 bowel sounds, 4 carotid bruits and a carotid pulse timed with the onset of systole. Some heart sounds have breath sounds included. The sounds are located in the correct anatomical site. Heart sounds are located at the aortic, pulmonic, tricuspid and mitral areas. Breath sounds are upper and lower right and left chest and four posterior sites. Bowel sounds are in the upper right and left quadrants. There is one site for carotid bruits in the neck. Breath sounds can be diminished at the lower lung while maintaing normal volume at the upper chest to present a variety of clinical conditions. When listening to a split S_2 in the pulmonic area, breath sounds are heard simultaneously. Students learn that S_2 splits on inspiration and closes on expiration. Instructors maintain control over the volume at each listening site.



SAM On-Line

Students access SAM On-Line 24/7 from any PC connected to the Internet. Repetition assists students in learning, relearning or refreshing their auscultation skills. SAM On-Line has same sounds as SAM. Comparison of sounds is available and easy to access.



The key to Patient Assessment



Class Teaching with the SimulScope

Group teaching in a classroom or auditorium is easily accomplished. Place the stethoscope on SAM with students and instructor wearing Wireless HeartMan Infrared Headphones. Everyone hears simultaneously with perfect clarity.

The instructor knows exactly what students are hearing. Group teaching can be performed with the SimulScope, Classroom Infrared Emitter, Auditorium Infrared Sound System Wireless E-Scope Electronics Stethoscope or the Cardionics Low-frequency Speaker System. The SimulScope or Classroom Infrared Emitter will accommodate groups of 25-30 while the Auditorium Infrared Sound System can handle from 1 to 500.

Identify Systole by Carotid Pulse Palpation

When assessing heart sounds, it is essential to differentiate systole from diastole. Because systole begins with the first heart sound (S_1), SAM has a carotid pulse timed with each first heart sound. Students palpate SAM's carotid pulse while listening to heart sounds.



錫昌科技
KYS Technology

8753

Welch Allyn®



Welch Allyn

KleenSpec® Disposable Vaginal Specula and Cordless Illumination System



WOMEN'S HEALTH

An advancement in women's health technology that's nothing short of brilliant

Welch Allyn KleenSpec® Disposable Vaginal Specula and Cordless Illumination System—

now in every size

for every type of patient.



590 Series KleenSpec® Disposable Vaginal Specula

Enhance Patient Comfort

- • The extra small speculum allows you to perform a comfortable exam with virginal/pediatric patients as well as post-menopausal and post-hysterectomy women—no more referrals or uncomfortable exams using metal specula or the wrong size
- • Smooth, molded acrylic designed to prevent pinching or binding of tissue for greater patient comfort

Help Reduce Cross-Contamination

- Single-use speculum helps to reduce cross-contamination for improved patient safety while eliminating the time and expense of reprocessing metal specs

Improve Staff Productivity

- Features a wider handle design for improved maneuverability and better balance during exams
- A strong grip and a yoke that's more flexible than low-cost substitutes

The 590 Series KleenSpec Vaginal Speculum is compatible with the Cordless Illumination System (#80010) as well as the Corded Illumination System (#78900).



#59004 Large | #59001 Medium | #59000 Small | #590XS Extra Small

Look for the distinctive Welch Allyn blue, green, white and yellow colored handles

> I had been using the corded version of the Welch Allyn Illumination System since 1980 and was thrilled when the cordless system was introduced. We have been using the Welch Allyn cordless Illumination system with disposable vaginal speculums for all of our patient exams since 2008 and couldn't be happier. This light is brighter than any I have ever seen and shows true tissue color. If you forget to charge the light, it is easy to grab a replacement from another room or use a spare. The light is small, easy and quick to use which truly makes us more efficient. With Manhattan space at a premium, not having floor space taken up by a light source is a great benefit to us. I would recommend this system to any clinicians looking to improve the quality of their care.
>
> *Shelley Kolton, MD / Downtown Women OB/Gyn Associates / New York City, NY*



KleenSpec Cordless Illumination System

- LED technology as opposed to halogen, for a whiter, brighter light and true tissue color during an exam
- No bulb replacement necessary for a reduced cost of ownership
- Features a cordless design so you'll never have to worry about cords getting in your way, breaking or needing to be cleaned, speeding the exam and giving you a full range of motion
- Push-button on/off; the illumination system easily fits into every size 590 Series speculum
- Newly designed light pipe provides a homogeneous spot and eliminates glare back so all of the light is projected forward
- Uniform spot—no dark or hot spots—for enhanced visualization of the exam area
- Produces much less heat than traditional lamps and has a continuous on time of 80 minutes
- A lithium ion battery provides a recharge time of five hours

Ordering Information

KleenSpec Vaginal Specula—Premium 590 Series

590XS KleenSpec 590 Series Premium Disposable Vaginal Specula, **X-Small (24/box; 4 boxes/case)**
59000 KleenSpec 590 Series Premium Disposable Vaginal Specula, **Small (24/box; 4 boxes/case)** SUPPLY ITEM
59001 KleenSpec 590 Series Premium Disposable Vaginal Specula, **Medium (24/box; 4 boxes/case)**
59004 KleenSpec 590 Series Premium Disposable Vaginal Specula, **Large (18/box; 4 boxes/case)**

KleenSpec Vaginal Specula—Premium 590 Series with Smoke Tube

59005 KleenSpec 590 Series Premium Disposable Vaginal Specula with Smoke Tube, **Small (12/box; 4 boxes/case)**
59006 KleenSpec 590 Series Premium Disposable Vaginal Specula with Smoke Tube, **Medium (12/box; 4 boxes/case)**

KleenSpec Cordless Illumination System

80010 Complete KleenSpec Cordless Illuminator with Charging Station
80015 Same as above, for export purposes—specify country and voltage; conforms to IEC 60601-1
80000 KleenSpec Cordless Illuminator
74010 Charging Station for Cordless Illuminator
59010 Disposable Sheath for Cordless Illumination System **(100/box; 5 boxes/case)**


#78900

KleenSpec Corded Illumination System

78900 KleenSpec Illumination System (with cord)—4.7 V Halogen Light Handle with on/off switch and transformer. 110-130 V, 60 Hz for North America. UL Listed, CSA Certified
78950 Same as above, for export purposes—specify country and voltage; conforms to IEC 60601-1
08800-U 4.6 V to 4.7 V Halogen Replacement Lamp for 78900 Illumination System
07800-U 6 V Halogen Replacement Lamp for 78010 Illumination System
58010 Disposable Sheath for Corded Illumination System **(25/box; 5 boxes/case)**

KleenSpec Vaginal Specula—Premium 580 Series w/Sheath

58000S KleenSpec 580 Series Premium Disposable Vaginal Specula with Sheath, **Small (18/box; 4 boxes/case)**
58001S KleenSpec 580 Series Premium Disposable Vaginal Specula with Sheath, **Medium (18/box; 4 boxes/case)**
58004S KleenSpec 580 Series Premium Disposable Vaginal Specula with Sheath, **Large (12/box; 4 boxes/case)**


#58001S
#78900

KleenSpec Storage Systems

78820 KleenSpec Corded Illumination Storage System
58014 KleenSpec Vaginal Speculum Dispenser

Green Series™ Exam Light IV—Another LED innovation from Welch Allyn

48810 GS Exam Light IV with Table/Wall Mount
48950 Mobile Stand for GS Exam Light IV
52640 Disposable Sheath for Exam Light III and GS Exam Light IV **(25/box, 5 boxes/case)**


#48810

Explore the entire Welch Allyn women's health line, including the KleenSpec Series and Cordless Illumination System online at **welchallyn.com/womenshealth** or call us at **800.535.6663.**

ENERGY STAR PARTNER

Welch Allyn, Inc.
4341 State Street Road
Skaneateles Falls, NY 13153 USA
(p) 800.535.6663 (f) 315.685.3361

WWW.WELCHALLYN.COM

MEDICAL LIGHTING · THERMOMETRY · BLOOD PRESSURE · PHYSICAL EXAM · WOMEN'S HEALTH · PATIENT MONITORING · CARDIOPULMONARY

© 2017 Welch Allyn MC14181 80021016 Ver C 2017-05

Welch Allyn®

8776
NOTE LOCATION OF
POWER 115V OUTLET

Welch Allyn

Green Series™ 777
Integrated Wall System

ENERGY STAR PARTNER

WelchAllyn®
Advancing Frontline Care™

Welch Allyn **Green Series™ 777 Integrated Wall System**

Allows for reliable diagnostic patient data in a standardized and energy efficient solution to improve your bottom line.

Welch Allyn Green Series™ 777 Wall Transformer—configured to each facility's needs.

- Help reduce facility cost with a more energy efficient product than the 767 Wall Transformer
- Help improve workflow and save energy with handles that automatically turn on/off
- Quickly and easily upgrade from the Welch Allyn 767 Wall Transformer to the Green Series 777 Wall Transformer
- No on/off switch reduces contact, to help reduce the risk of cross-contamination

Welch Allyn Otoscopes & Ophthalmoscopes

- Standardize or choose the technology you need for each facility
- Upgrade to the Welch Allyn LED lamp for greater energy efficiency and lower cost of ownership



Welch Allyn MacroView™ Otoscope

- Almost twice the field of view and 30% greater magnification than traditional otoscopes
- Allows for simplified diagnosis of Otitis Media through superior visualization of the tympanic membrane



Welch Allyn Pneumatic Otoscope

- Rotating lens with ultraseal enables easy pneumatic otoscopy
- Easier instrumentation to allow a faster and more comfortable exam for the patient



Welch Allyn PanOptic™ Ophthalmoscope

- Fast, easy entry into undilated pupils with 5X larger view of the fundus for a streamlined exam
- 25º field of view vs. the standard 5º field of view provides optimal visualization



Welch Allyn Coaxial Ophthalmoscope

- 18 unique aperture/filter combinations for greater versatility
- 28 focusing lenses with a range of -25 to +40 diopters

Welch Allyn industry-leading blood pressure and thermometry devices provide you with fast, accurate and reliable patient data you can trust—to help improve patient care and clinical decisions.

Welch Allyn Wall Aneroid

- Recessed, laser-engraved dial face with high-contrast pointer provides certified accuracy to reduce errors and improve patient care
- Lifetime calibration warranty reduces cost of ownership

Welch Allyn Connex® ProBP™ Digital Blood Pressure Device

- Connectivity to most leading EHR systems, to improve patient documentation accuracy and efficiency
- Improve patient comfort and increase throughput with fast, 15-second NIBP readings
- Portable, so you can take BP readings just about anywhere

Welch Allyn Spot Vital Signs® Device

- Improve workflow by using a device that includes NIBP, pulse rate and MAP
- Optional SureTemp® thermometry and Masimo® or Nellcor® pulse oximetry

Welch Allyn Spot Vital Signs® LXi Device

- Improve patient comfort and increase throughput with 15-second NIBP readings taken as the cuff inflates
- Connectivity to most leading EHR systems, to improve patient vitals documentation accuracy and efficiency
- Improve workflow by using a device that, includes NIBP, pulse rate, MAP, thermometry and SpO_2

Welch Allyn SureTemp® Plus Electronic Thermometer

- Provides accurate oral temperatures in 4 to 6 seconds, axillary and rectal temperatures in 10 to 13 seconds and adult axillary temperatures in 12 to 15 seconds
- Reduce risk of cross-contamination with single-use probe covers
- Improve efficiency with convenient storage for 75 probe covers
- Takes approximately 6,000 readings on 3 AA batteries and provides last temperature recall

Welch Allyn®

Standardize across facilities for greater efficiency and consistent data capture or customize for your facility's needs.

	WALL BOARD	GS 777 WALL TRANSFORMER	COAXIAL OPHTHALMOSCOPES	PANOPTIC™ OPHTHALMOSCOPES		DIAGNOSTIC MACROVIEW™ OTOSCOPES		PNEUMATIC OTOSCOPE	KLEENSPEC® DISPENSERS		WALL ANEROID	CONNEX® PROBP™ DEVICE	SURETEMP® PLUS THERMOMETER
Part #		77710	11720	11810	11820	23810	23820	20200	52400-PF	52100-PF	7670-01	34XFWT-B	01690-300
GS 777 Integrated Wall Systems													
77798	●	●	●					●		●	●		
77791-1MPX	●	●		●		●			●		●		●
77791-2MPX	●	●			●	●			●		●		●
77791-MX	●	●	●			●			●		●		●
77792-1MP	●	●		●		●			●		●		
77792-2MP	●	●			●	●			●		●		
77792-M	●	●	●			●			●		●		
77795-2MPX	●	●			●		●		●		●		●
77795-MX	●	●	●				●		●		●		●
77796-M	●	●	●				●		●		●		
77797-2PX	●	●			●			●		●	●		●
77797-X	●	●	●					●		●	●		●
77791-MXNOBP	●	●	●			●			●				●
77792-MNOBP	●	●	●			●			●				
GS 777 Integrated Wall Systems with Connex® ProBP™ Digital Blood Pressure Device (includes wall mounting bracket and device)													
77791-MXPROBP	●	●	●			●			●			●	●
77791-2MPXPROBP	●	●			●	●			●			●	●
GS 777 Integrated Wall Systems with Spot Vital Signs® or Spot Vital Signs® LXi Devices (includes wall mounting bracket only, devices must be ordered separately)													
77794-MSPOT	●	●	●			●			●				
77794-MLXI	●	●	●			●			●				
77794-2MPSPOT	●	●			●	●			●				
77794-2MPLXI	●	●			●	●			●				
GS 777 Wall Transformer Sets													
77510		●							●				
77910		●							●		●		
77710-71M		●	●			●							
77710-81M		●		●		●							
77710-82M		●			●	●							
77710-TAKX		●							●		●		●

The United States Green Building Council's Leadership in Energy and Environmental Design (LEED) is an internationally-recognized green building certification system providing benchmarks for the design, construction and operation of high-performance green buildings.

Welch Allyn is proud to have earned a Gold rating in the LEED certification program.

To place an order, call our Customer Service Department at: 1.800.535.6663
or contact your local Welch Allyn representative.

© 2012 Welch Allyn SM4085 Rev A www.welchallyn.com

ENERGY STAR PARTNER

Welch Allyn®
Advancing Frontline Care™

Welch Allyn®

30″ Integrated Wall Panel (REF 77790-3, 4, 5)

Manual part no. 725898, 80021929 Ver. B Revised 2017-04
© 2017 Welch Allyn

⚠ **WARNING** Welch Allyn is not responsible for the integrity of any mounting installation. Welch Allyn recommends that customers contact their Biomedical Engineering Department or maintenance service to ensure professional installation for safety and reliability of any mounting accessory.

1. Choose a location for the panel near the examination table and an electrical outlet.

Sample room layout

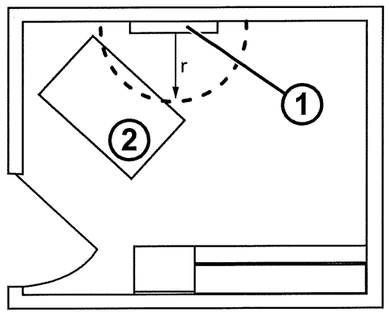

1. Panel
2. Examination table

2. On the selected wall, find and mark the studs, and choose the panel height and corresponding height for the mounting rail bracket.

   Recommendation: Place the bracket 63 in. (160 cm) from the floor.

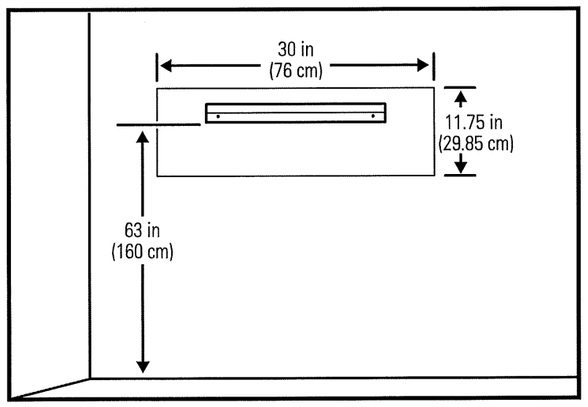

3. Affix the mounting rail bracket to two studs at the selected height using the available screws.

   ⚠ **Caution** Ensure that the upper "lip" of the bracket sticks out from the wall and that the bracket is level.

4. Hang the panel on the mounting rail bracket.

   ⚠ **WARNING** Ensure that the channel on the back of the panel fully engages the mounting rail bracket. The panel should be level and flush to the wall.

5. Secure the unit to the wall using the "A" screw.

   ⚠ **WARNING** Failure to install this security screw may result in personal injury and equipment damage.

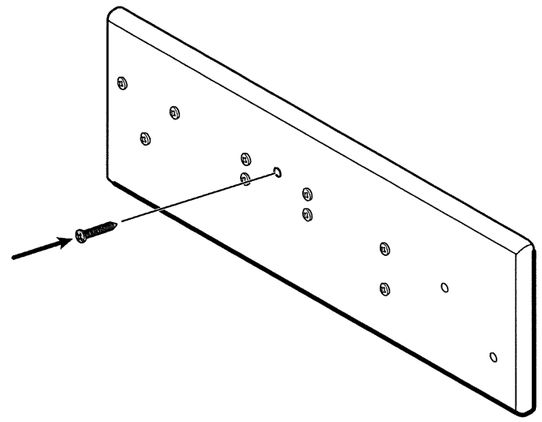

6. Mount the Welch Allyn products to the panel according to the figures on the reverse side of this instruction sheet.

   Aneroid blood pressure gauge: position the gauge bottom on the pre-installed screw and then secure the top of the gauge using the two additional screws provided.

   SureTemp® Plus thermometer: position the thermometer on the pre-installed screws and then secure it with the two additional screws provided.

   Install the remaining products on the pre-installed screws.

   For diagnostic systems without SureTemp thermometry, cover the unused screw holes with the FastCaps provided.

Instrument location—Aneroid blood pressure gauge

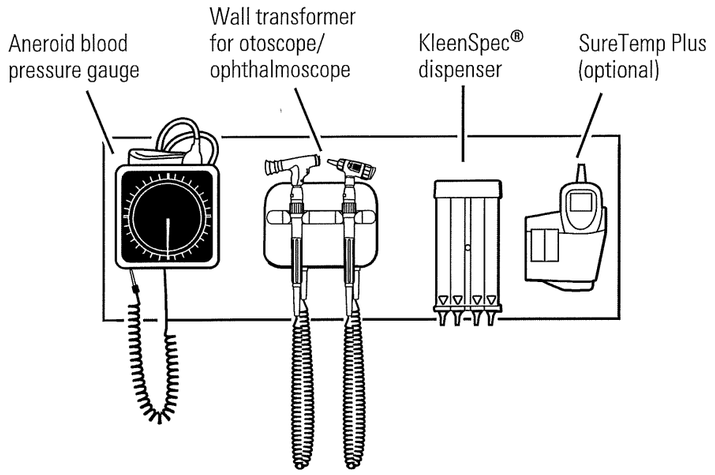

Instrument location—ProBP™

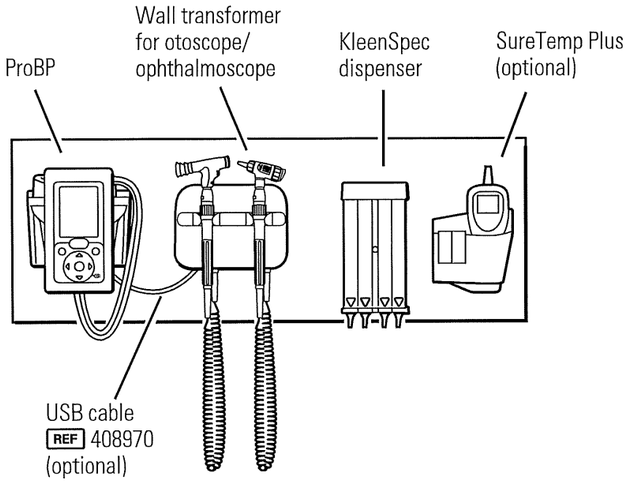

Instrument location—Spot Vital Signs®

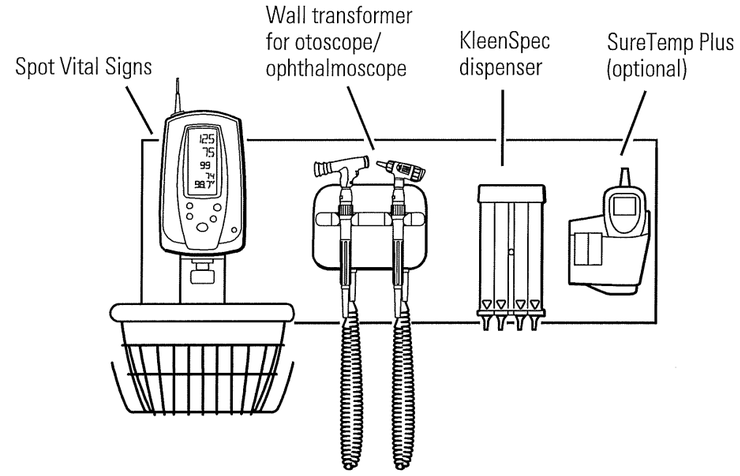

Instrument location—Spot Vital Signs® LXi

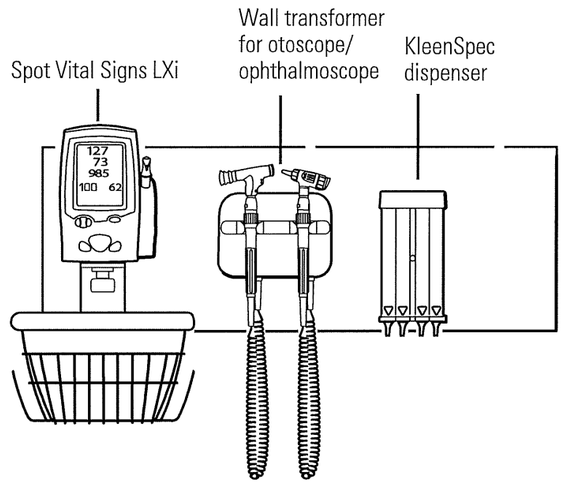

Welch Allyn, Inc.
4341 State Street Road
Skaneateles Falls, NY 13153-0220 USA
www.welchallyn.com

EC REP Regulatory Affairs Representative
Welch Allyn Limited
Navan Business Park
Dublin Road
Navan, County Meath
Republic of Ireland

Manufactured in the USA for Welch Allyn by Heartwood. P/N: 725898

	Ophthalmoscopes				Otoscopes			Handles			Desk Charger	8781	
													
Part Number	11810	11820	11720	13000	20200	23810	21111	71670*	71910*	72800/71249 Pocket	71140	Hard	Soft
71510-PSM		•			•						•		
71630											•		
71640											•		
71641-M			•			•					•		
71641-MS			•			•					•		
71811-MP	•					•					•		
71811-MPS	•					•					•		
71821-MP		•				•					•		
92850				•			•			•	•	•	
92851				•			•			•	•		•



* All desk sets come with two handles



8801
TYPICAL



MEDICATION ERROR PREVENTION SYSTEMS

SIGMA Spectrum Infusion System
Committed to Helping Reduce Medication Errors

Medication administration errors are costly and can result in patient harm. To effectively protect the patient, smart infusion pump technology helps intercept the potential harm associated with errors in dose programming and calculations. The SIGMA Spectrum Infusion System incorporates **Dose Error Reduction Software** (DERS) plus additional, unique Generation 2 safety features that are designed to guide users toward safe practices and help to reduce pump programming errors.

Enhancing patient safety requires the commitment of everyone from clinicians to hospital administrators. To ensure medication error reduction is a top priority, clinicians need to establish best practices and use equipment that helps them meet their medication error reduction goals. The smart technology of the SIGMA Spectrum Infusion System can help accomplish these goals with:

- Multiple error prevention systems focused on enhancing patient safety
- Rapid, intuitive workflow that supports error prevention with consideration to the clinician's challenging environment and needs
- Expert support before, during, and after implementation



The SIGMA Spectrum's smart design brings multiple safety features directly into the hands of the people who play a critical role in creating a safer environment for patients.

8915

DETECTO STAND ON SCALES-MECHANICAL

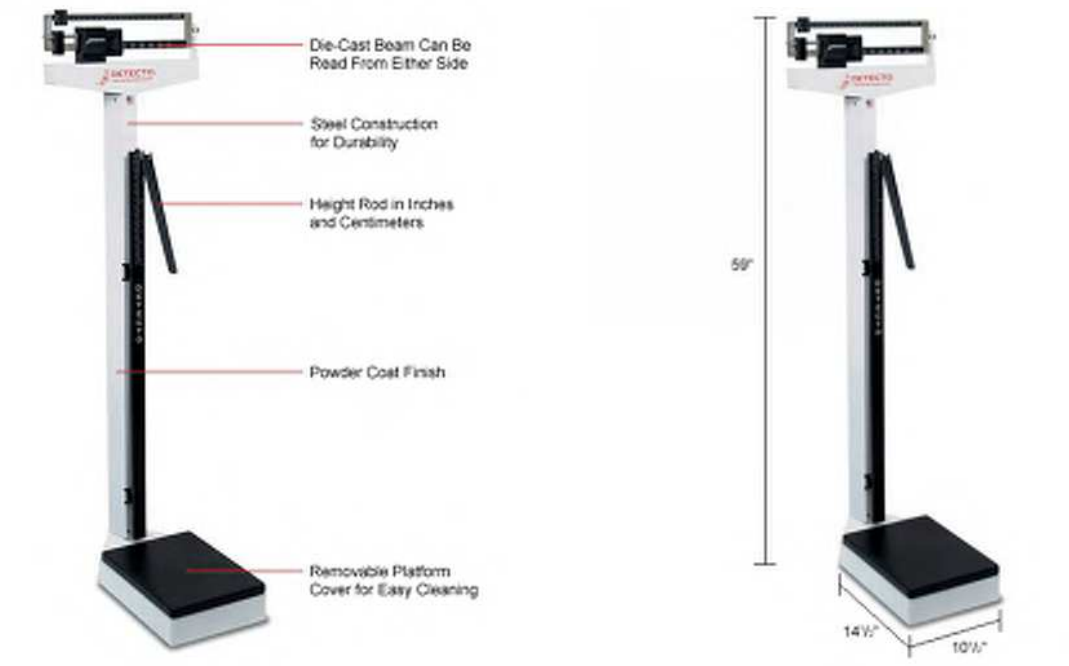

Detecto 439 Eye Level Beam Physician Scale with Height Rod, 400 lb x 4 oz

Detecto's model 439 features a height rod in inches and centimeters. The platform cover is easily removed for cleaning. The die-cast beam can be easily read from either side. Now available in 500 lb / 220 kg capacities by using the optional counterweights. Detecto continues to set the pace in the clinical scale industry, backed by over a century of leadership. Every Detecto physician scale features a time-honored reputation for rigid construction and precision engineering. This assures an unbeatably rugged product that guarantees accuracy and durability. All Detecto cales are tested with weights traceable to the U.S. Bureau of Standards. Detecto's model 439 features a height rod in inches and centimeters.Theplatformcover is easily removed for cleaning. The die-cast beam can be easily read from either side.

Product Specifications

- **BRAND**Detecto
- **LENGTH INCHES**10-1/2
- **WIDTH INCHES**14-1/2
- **HEIGHT INCHES**59
- **COLOR**White
- **CONSTRUCTION**Powder Coated Steel
- **PAN/PLATFORM SIZE**10-1/2 x 14-1/2
- **CAPACITY LBS**400
- **CAPACITY KG**--
- **READABILITY GRAMS**--
- **DESCRIPTION**Eye-Level Physician Scale
- **MANUFACTURERS PART NUMBER**439
- **HANDPOST**N
- **PLATFORM WIDTH INCHES**14-1/2
- **DUAL READABILITY**N
- **PLATFORM LENGTH INCHES**10-1/2
- **WHEELS**N
- **USED WITH**Height Rod, Wheels
- **WEIGHT LBS**38
- **HEIGHT ROD**Y
- **READABILITY OZ**4

SOURCE: https://www.globalindustrial.com/p/packaging/scales/Medical-Physician/eye-level-physician-scale-400-lb-x-4-oz-with-height-rod-10-1-2-inch-x-14-1-2-inch-platform?infoParam.campaignId=T9F&gclid=EAIaIQobChMIzL2Gqa3p4AIVmo7ICh1PrAi6EAQYAiABEgIJ5fD_BwE

8915 DIGITAL VERSION

solo®
DIGITAL CLINICAL SCALES

DIGITAL PHYSICIAN SCALE WITH HEIGHT ROD



- 550 lb x 0.2 lb / 250 kg x 0.1 kg Capacity
- Weight, Height, and Body Mass Index
- 14 in W x 15 in D x 2.5 in H Platform Size
- 6 AA Batteries (included) or Optional AC Adapter
- Inline Mechanical Height Rod

No power outlet available, no problem! The solo® comes with 6 AA batteries for weighing anywhere.



The solo® indicator features 8 simple buttons that are easily identifiable in any language.

THE MOST ECONOMICAL, HIGH-QUALITY DIGITAL PHYSICIAN SCALE ON THE MARKET!



The oversized 14 x 15 inch platform with rubber mat is only 2.4 inches high making it easy for patients to step on/off.

The AC port is located in the base, so no pesky wires dangle from up on the indicator (AC Adapter optional: model PD-AC)

Detecto's solo® scale stands alone in economic clinical weighing

DETECTO®
www.Detecto.com

(800) 641-2008 • detecto@cardet.com • 203 East Daugherty St., Webb City, MO 64870

9240

STEP STOOL; KIK STEP FOR ANATOMY LAB AREAS



Kik-Step®

KEY FEATURES

SAFE, TWO-STEP DESIGN

14" overall height with non-skid tread to prevent slipping.

16” diameter at the base, 11 inch diameter at the top

SPRING MOUNTED CASTERS

Spring mounted casters roll smoothly and retract when weight is applied.

PROTECTIVE BUMPER

Wrap-around bumpers protect walls and furniture.

SOLID STEEL CONSTRUCTION

Supports up to 350lbs.

Available in silver, gray, black

SOURCE: https://www.staples.com/Cramer-Kik-Step-Stool-Silver/product_412801?akamai-feo=off

9241

FOOT STOOL SINGLE STEP



The steel-welded silver vein construction on this foot stool by Drive Medical is durable and attractive. The non-skid, ribbed rubber platform on this medical step stool provides stability, as do reinforced rubber tips on the legs. Medical Step Stool Surface: 14"W x 11"D. Medical Step Stool Height: 9"H. Overall Medical Step Stool Dimensions: 17"W x 13"D. This Medical Step Stool is protected with a limited lifetime warranty.

Product Specifications

- **BRAND**Drive Medical
- **MANUFACTURERS PART NUMBER**13030-1SV
- **WIDTH INCHES**14
- **DEPTH INCHES**11
- **HEIGHT INCHES**9
- **WEIGHT LBS.**5
- **COLOR**Silver Vein
- **CONSTRUCTION**Steel
- **DESCRIPTION**Step Stool without Handrail
- **WEIGHT CAPACITY**300 lbs
- **STEP SURFACE**14"W x 11"D
- **STEP HEIGHT**9"
- **HANDRAIL HEIGHT INCHES**--
- **TYPE**Step Stool
- **PACKAGE QUANTITY**1

SOURCE: https://www.globalindustrial.com/p/medical-lab/medical-equipment/patient-room/footstool-with-non-skid-rubber-platform?unbxdSuggestion=SUGGESTION%20-%20Drive%20Medical%20Step%20Stool%20-%20Non-Skid%20Rubber%20Footstool%20Platform%2013030-1SV&q=step%20stoo

9258

Performance-PRO™ XT

Manual Ambulance Cot



3800 E. Centre Avenue
Portage, MI 49002 USA
t: 269 329 2100
toll free: 800 327 0770

ems.stryker.com

Standard Features

- Color-coded controls
- High visibility powder-coated frame
- Lightest-in-class, all-aluminum X-frame
- Scientifically optimized lift bar & control design
- Lower lifting bar
- Lift-capable safety bar
- Integrated bumper system
- Perforated litter surface
- One-hand release, retractable head section
- One-hand release, fold-down siderails
- One-hand release, infinite positioning, pneumatically assisted backrest
- Oversized wheels with sealed caster and wheel bearings
- G-rated bolster mattress
- Shock or flat leg positioning
- G-rated patient restraints
- Single wheel lock
- Side release handle
- Built-in pull handle
- X-frame guards
- Power washable
- Load height adjustment

Optional Features

- Heavy duty two- or three-stage IV poles (patient right or left)
- Permanent or removable O2 bottle holders (head end, foot end or fowler)
- Defibrillator platform
- Dual wheel locks
- Pedi-Mate restraint package
- Equipment hook
- Backrest storage pouch
- Head end storage flat
- Base storage net
- Knee gatch
- Head extension
- Pillow
- Restraint extender
- Power-LOAD compatibility

Certifications CE

Mkt Lit-1457 18 JAN 2017 Rev A.1
Copyright © 2017 Stryker
Printed in U.S.A.

Specifications

Model Number	**6086**
Height[1]	
Position 1	13.8 in (35.1 cm)
Position 2	22 in (55.9 cm)
Position 3	25.8 in (66.5 cm)
Position 4	28.1 in (71.4 cm)
Position 5	31.9 in (81 cm)
Position 6	34.6 in (87.9 cm)
Position 7	37.3 in (94.7 cm)
Position 8	40 in (101.6 cm)
Position 9	42.2 in (107.2 cm)
Load Height Adjustment	
High	Deck heights 34 in (86 cm) and above
Mid	Deck heights between 30 – 34 in (76 – 86 cm)
Low	Deck heights below 30 in (76 cm)
Length	
Standard	80 in (203 cm)
Minimum	64 in (163 cm)
Width	23 in (58 cm)
Weight [2]	89 lb (40.37 kg)
Wheels	
Diameter	6 in (15 cm)
Width	2 in (5 cm)
Articulation	
Backrest 0 –73°	
Shock Position +15°	
Optional Knee Gatch 30°	
Maximum Weight Capacity	700 lb (318 kg)
Minimum Operator Required	
Occupied Cot	2
Unoccupied Cot	1
Recommended Fastener System	
Power-LOAD	Model 6390
Floor Mount	Model 6370 or 6377
Wall Mount	Model 6371
Recommended Loading Height[3]	Up to 34 in (86.4 cm)

Warranty

- One year parts and labor or two year parts only
- One-year soft goods
- Three-year X-frame components
- Lifetime on all welds*

Extended warranties available.

*7-year service life.

[1]Height measured from bottom of mattress, at seat section, to ground level.

[2]Cot is weighed without mattress and restraints.

[3]Load height can be set between 27.25 in and 34 in.

Stryker reserves the right to change specifications without notice. In-service video included with every order.

The Performance-PRO XT is designed to conform to the Federal Specification for the Star-of-Life Ambulance KKK-A-1822.

The Performance-PRO XT is designed to be compatible with competitive cot fastener systems.

The yellow and black color scheme is a registered trademark of Stryker Corporation

Meets dynamic crash standards with Performance-LOAD cot fastening system (SAE J3027 with X-restraints).

Stryker Corporation or its divisions or other corporate affiliated entities own, use or have applied for the following trademarks or service marks:**Performance Pro, Power-LOAD, Stryker,** . All other trademarks are trademarks of their respective owners or holder.

9259

stryker

Power-PRO™ XT

Powered Ambulance Cot



3800 E. Centre Avenue
Portage, MI 49002 USA
t: 269 329 2100
toll free: 800 327 0770

ems.stryker.com

Standard Features

- Automatic in-cot fastener shut-off
- Manual back-up release handle
- Automatic high-speed retract
- Battery-powered hydraulic lift system
- Preventative maintenance hour meter
- Battery pack power level indicator
- Settable load height with jog function
- Color-coded controls
- High visibility powder-coated frame
- Lightweight, rugged aluminum construction
- Optimized lift bar and control design
- Lower lifting bar
- Lift-capable safety bar
- Integrated bumper system
- Retractable head section
- Floor-mounted safety hook
- One-hand release, fold down siderails
- One-hand release, infinite positioning, pneumatically assisted backrest
- Oversized wheels with sealed caster and wheel bearings
- Sealed bolster mattress
- Shock or flat leg positioning
- Two lap belts and one four-point shoulder restraint
- Built-in pull handle
- X-frame guards
- Power washable
- SMRT power system (12V DC, 120V AC and 240V AC options available)

Optional Features

- Heavy duty two- or three-stage IV poles (patient right or left)
- Permanent or removable O_2 bottle holders (head end, foot end or fowler)
- Sealed flat mattress
- Dual wheel locks
- Head extension
- Pillow
- Equipment hook
- Backrest storage pouch
- Head end storage flat
- Defibrillator platform
- Base storage net
- Knee gatch
- SMRT charger mounting bracket
- Power-LOAD™ compatibility

Specifications

Model Number	**6506**
Height[1] (infinite height positioning between lowest and highest position)	
Highest Position	41.5 in. (105 cm)
Lowest Position	14 in. (36 cm)
Length	
Standard	81 in. (206 cm)
Minimum	63 in. (160 cm)
Width	23 in. (58 cm)
Weight[2]	125 lb (57 kg)
Wheels	
Diameter	6 in. (15 cm)
Width	2 in. (5 cm)
Articulation	
Backrest	0–73°
Shock Position	+15°
Optional Knee Gatch	30°
Maximum Weight Capacity[3]	700 lb (318 kg)
Minimum Operator Required	
Occupied Cot	2
Unoccupied Cot	1
Recommended Fastener System	
Power-LOAD	Model 6390
Floor Mount	Model 6370 or 6377
Wall Mount	Model 6371
Recommended Loading Height[4]	Up to 36 in (91 cm)

Warranty

- Two-year parts, and labor
- Two year bumper to bumper
- One-year soft goods
- Three-year X-frame components
- Three-year limited powertrain
- Lifetime on all welds

Extended warranties available.

7-year service life.

[1] Height measured from bottom of mattress, at seat section, to ground level.

[2] Cot is weighed with one battery pack, without mattress and restraints.

[3] 700 lb weight capacity with an unassisted lift capacity of 500 lb (Cot loads over 300 lb (136 kg) may require additional assistance to meet the set cot load height).

[4] Can accommodate load decks up to 36 in. Load height can be set between 26 in and 36 in.

Stryker reserves the right to change specifications without notice.

In-service video included with every order.

The Power-PRO XT is designed to conform to the Federal Specification for the Star-of-Life Ambulance KKK-A-1822.

The Power-PRO XT is designed to be compatible with competitive cot fastener systems.

The yellow and black color sceme is a registered trademark of Stryker Corporation

Meets dynamic crash standards with Power-LOAD cot fastening system (AS/NZS-4535, BS EN-1789 with X-restraints and SAE J3027) and Performance-LOAD cot fastening system (SAE J3027 with X-restraints).

Stryker Corporation or its divisions or other corporate affiliated entities own, use or have applied for the following trademarks or service marks: **Power-LOAD, Power-PRO, Stryker,** . All other trademarks are trademarks of their respective owners or holder.

Certifications

IPX6 IEC-60601-1

SMRT™ Power

Printed in U.S.A.
Copyright © 2017 Stryker
Mkt Lit-1450 06 JAN 2017 Rev A.4

9299

IV POLE 4 HOOK ON CASTERS

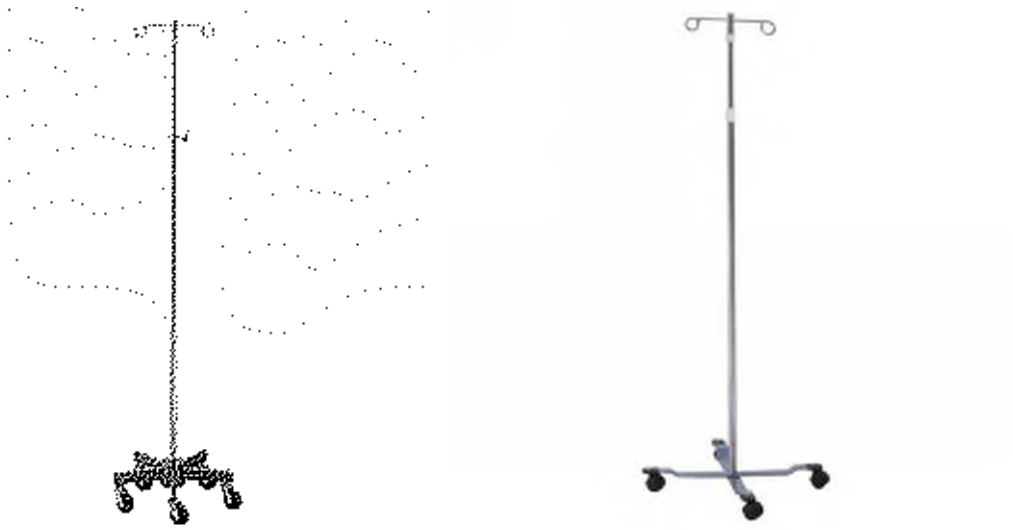

Lakeside® 5-Leg IV Stand With 4 Ram's Horn Hook

Designed for tight spots, this **space saving 16" diameter size delivers the stability you need**. Epoxy coated steel base. Easy-to-clean chrome plated top post assembly. 3" rubber wheel, ball bearing casters provide smooth movement. Twist knob for easy height adjustment. Adjustment Range: 54" - 90-1/2". Some assembly required.

OR

McKesson Brand

Features

- McKesson 5-Leg I.V. Stand
- 4-hook ram's horn.
- 5-leg, dual wheel nylon casters.
- Exclusive No Loss knob.
- Chrome-plated steel tubing.
- 25 inch cast aluminum base.
- Height Adjustment: 52-1/4 inch to 92-3/4 inch
- Load Capacity: 45 lbs.
- Some assembly required.
- Not Made with Natural Rubber Latex.
- Packaged: Each
- NOTE: Photo shown is the IV stand with 2 ram hooks versus 4.

SOURCES: https://www.globalindustrial.com/p/material-handling/service-carts/medical-stands/lakeside-5-leg-iv-stand

https://mms.mckesson.com/product/407332/McKesson-Brand-81-11360

PEDIGO®

mayo stands



mayo stands

foot-pedal operated

- Convenient foot-pedal operated lock adjusts height from 37" to 62½"
- All welded stainless steel construction
- Base designed to move under low clearance equipment with maximum stability
- 2" dual wheel swivel casters



P-1065-SS

- Removable extra large 20" x 25" stainless steel tray for easy cleaning
- 50 lbs. weight capacity evenly distributed



P-1066-SS

- Removable 16¼" x 21¼" stainless steel tray for easy cleaning
- 50 lbs. weight capacity evenly distributed



P-1068-SS

- Removable 12⅝" x 19⅛" stainless steel tray for easy cleaning
- 50 lbs. weight capacity evenly distributed



P-1069-SS

- Removable large 16¼" x 21¼" stainless steel tray for easy cleaning
- Four 2" dual wheel swivel casters for increased mobility
- 50 lbs. weight capacity evenly distributed

hand operated

- Adjust height from 37" to 61½" - friction lock
- Base designed to move under low clearance equipment with maximum stability
- All welded stainless steel construction
- 2" dual wheel swivel casters



P-1066-A-SS

- Removable 16¼" x 21¼" stainless steel tray for easy cleaning
- 50 lbs. weight capacity evenly distributed



P-1068-A-SS

- Removable 12⅝" x 19⅛" stainless steel tray for easy cleaning
- 50 lbs. weight capacity evenly distributed



P-1069-A-SS

- Removable large 16¼" x 21¼" stainless steel tray for easy cleaning
- 50 lbs. weight capacity evenly distributed



P-66

- Removable 19⅛"L x 12⅝"W stainless steel tray on powder-coated frame
- Adjusts height from 32" to 53"
- Two 2" double ball bearing casters
- 50 lbs. weight capacity evenly distributed



P-65 *Medical Tray Unit*

- Removable 19⅛"L x 12⅝"W stainless steel tray on chrome plated frame
- Two 2" double ball bearing casters
- 40 lbs. weight capacity evenly distributed

Printed using 100% Clean Wind Power

800.822.3501 • FAX 360.696.1700 • www.pedigo-usa.com

Proudly Made in the USA

4000 SE Columbia Way • Vancouver, Washington 98661

stryker

Tru-Fit®
Overbed Tables



Split-top with storage compartment
(available on split-top or single-top)

The sleek design of the award-winning Tru-Fit Overbed Table easily slides under beds, stretchers and mobile recliners. Available in several laminate and base colors, The Stryker single-top and split-top overbed tables coordinate with any room decor.



Single-top with vanity



Single-top without vanity



Split-top overbed table

Low-profile, U-shaped base provides maximum versatility.

Infinite adjustments between low and high heights

High-impact polystyrene cover protects the base and conceals the caster

Dura-edge™ protects the table and contains spills

Available with vanity compartment and acrylic mirror

Storage compartment option provides additional storage space

Tru-Fit
Overbed Tables

stryker


Single-top without vanity


Single-top with vanity


Split-top overbed table with vanity


Split-top with storage compartment

Standard features

- 1.46 inch (3.7 cm) diameter twin swivel casters
- Durable high-impact ploystyrene base cover
- Height adjustment to 43.75 inches (111 cm) (single-top only)
- Height adjustment to 45.5 inches (111 cm) (split-top only)
- Infinite adjustments between low and high heights
- Anodized aluminium column
- Tabletop with Dura-Edge
- Secondary laminate top (split-top only)
- Storage vanity with acrylic mirror

Optional features

- Choose from six standard laminates and four standard base/Dura-Edge colors
- Storage compartment

Specifications	Single-top without vanity	Single-top with vanity	Split-top with vanity
Part #	3150-000-100	3150-000-200	3150-000-300
Height			
High	43.75″ (111.1 cm)	43.75″ (111.1 cm)	45.5″ (115.6 cm)
Low	27″ (68.6 cm)	27″ (68.6 cm)	29″ (73.7 cm)
Weight capacity	75 lb. (34 kg)	75 lb. (34 kg)	75 lb. (34 kg)
Weight	43 lb. (20 kg)	50 lb. (23 kg)	61 lb. (28 kg)
Overall table top			
Length	31″ (79 cm)	31″ (79 cm)	31″ (79 cm)
Width	17.5″ (44.5 cm)	17.5″ (44.5 cm)	17.5″ (44.5 cm)
Base			
Height	2.2″ (5.6 cm)	2.2″ (5.6 cm)	2.2″ (5.6 cm)
Length	32″ (81 cm)	32″ (81 cm)	32″ (81 cm)
Width	21.25″ (54 cm)	21.25″ (54 cm)	21.25″ (54 cm)
Caster diameter	1.46″ (3.7 cm)	1.46″ (3.7 cm)	1.46″ (3.7 cm)

Storage compartment
Part number 3151-050-001

Weight capacity	40 lb. (18 kg)	40 lb. (18 kg)	40 lb. (18 kg)

Total unit with storage compartment

Weight	68 lb. (31 kg)	75 lb. (43 kg)	86 lb. (39 kg)
Length	42.75″ (109 cm)	42.75″ (109 cm)	42.75″ (109 cm)
Width	17.5″ (44.5 cm)	17.5″ (44.5 cm)	17.5″ (44.5 cm)

Warranty

One year parts and labor

Mkt lit-95-02022005 Rev G
Copyright © 2018 Stryker
Printed in U.S.A.

3800 E. Centre Avenue
Portage, MI 49002 USA
t: 269 329 2100
toll free: 800 327 0770

stryker.com

*25 lb. safe working load
Furniture is manufactured exclusively for Stryker Medical.
Stryker reserves the right to change specifications without notice.

Stryker Corporation or its divisions or other corporate affiliated entities own, use or have applied for the following trademarks or service marks: Dura-Edge, Tru-Fit, Stryker. All other trademarks are trademarks of their respective owners or holder.

9312a

Ritter 224 & 225

S P E C I F I C A T I O N S

Ritter 224 and 225 Barrier-Free exam chairs are designed for properly positioning patients when necessary for lower-body examinations.



Ritter 224 Barrier-Free® Power Examination Chair

Features

The Ritter 224 has a gas-spring assisted back section with an easy access backrest mechanism while the Ritter 225 has a power back system. Both have adjustable low and high heights, built-in pillows, hideaway stirrups that lock in one of four lateral positions, foot extension shelves to expand the table length, paper roll holders hidden under the headrest, storage for one 21" x 3.5" diameter paper roll, polystyrene treatment pans, foot control, and leveling feet.

Specifications

Patient Weight Capacity:
500 lb (227 kg)

Height:
Uncompressed: 18" Low/37" High
(46 cm/94 cm)

Seamless Upholstery Dimensions:
28" W x 60" L
(71 cm/152 cm)

Length with Footrest Extended:
76" (193 cm)

Pelvic tilt: 5 1/5°

Heated Drawer: 24.6 watt

Heated Drawer Temperature:
92° F to 112° F at 115 VAC input voltage, 70° F ambient

Paper Roll Holder: Holds 24" x 3.56" dia. paper roll (61 cm x 9 cm)

Electrical Receptacle - Electrical Draw: 4 A

Hospital-grade, electrical receptacles on left and right sides

Table Weight: 409 lb (185 kg)

Shipping Weight: 465 lb (211 kg)

Electrical Ratings

224-001: 115 VAC, 50/60Hz, 9A

224-002: 115 VAC, 50/60Hz, 11.5A

224-003: 115 VAC, 50/60Hz, 11.5A

225-002: 115 VAC, 50/60Hz, 11.5A

225-003: 115 VAC, 50/60Hz, 11.5A

Accessories

Patient Support Rails Plus™

Patient Support Rails™

Assist Arms

Supply Assistant

Articulating Knee Crutches

Knee Crutches

Stainless Steel Treatment Pan

IQvitals® Table Mount

Standard Upholstery Colors

- Mist-813
- Stone-814
- Restful Path-858
- Iron Ore-851
- Lunar Gray-845
- Obsidian-857
- Oasis-843
- Soothing Blue-855
- Dream-847
- Mineral-844
- Healing Waters-848
- Shaded Garden-853
- Citrus-849
- Sandy Retreat-850
- Curative Copper-846
- Cranberry-859
- Dark Linen-856
- Latte-860
- Robust Brown-852
- Deep Earth-854

UltraFree* Colors

- UltraFree Stone-865
- UltraFree Restful Path-868
- UltraFree Obsidian-867
- UltraFree Harbor-861
- UltraFree Wheatgrass-862
- UltraFree Spice-863
- UltraFree Cranberry-869
- UltraFree Dark Linen-866
- UltraFree Latte-870
- UltraFree Branch-864

***Ultraleather® by Ultrafabrics**

CARB 93120.2 Phase 2 Compliant

Midmark is an ISO 13485 and ISO 9001 Certified Company.

Ritter 224/225 Comparison Chart

	18" Seat Height (Uncompressed)	500 lb Weight Capacity	Power Base	Standard Rail Accessory Receivers	Power Back	Clean Assist™ Roller System	Active Sensing Technology®	Drawer Heater & Pelvic Tilt	Tamper-Resistant Electrical Outlets
225-002	•	•	•	•	•		•	•	•
225-003	•	•	•	•	•	•	•	•	•
224-001	•	•	•	•					
224-002	•	•	•	•			•	•	•
224-003	•	•	•	•		•	•	•	•

Ritter® by MIDMARK

For more information or a demonstration, contact your Midmark dealer or Midmark Corporation, Dayton, OH.
Call: 1-800-MIDMARK
Fax: 1-800-365-8631
or visit midmark.com

© Midmark Corporation 2018
Midmark Corporation, Dayton, OH.
Products subject to improvement changes without notice.
Litho in U.S.A. 007-10067-00 Rev. B1 (2/18)

Hill 90E

Exam Chair



Hill Laboratories
COMPANY

REFERENCE MANUAL

Congratulations!

And welcome to the Hill Laboratories family

HillLaboratories Company has been making

quality a family business since 1945.

Your Hill HA90E is built in a tradition of

innovation and value that Hill Laboratories products

have become known for.

Our good name rests on the confidence that

your Hill Chair will provide you with solid, reliable service

for many years to come.

At Your Service

The Hill Laboratories Guarantee

Your Hill Laboratories HA90E has been thoroughly tested and inspected before shipment. All parts are guaranteed against defect in materials for one full year from date of purchase. During this period, any such defect will be remedied by Hill Laboratories or by a factory-authorized repair service without charge.

Tables damaged by mishandling or accident will be repaired at a reasonable charge.

All correspondence should be directed to your local dealer, or when this is not possible, to Hill Laboratories directly.

We appreciate your business and your confidence in our product. Our aim is to provide you with excellent service and satisfaction for many years to come.

Howard A. Hill

President of Hill Laboratories Company

Table Serial Number_____

Ready for use

Your Hill HA90E comes ready to plug into any 115 volts outlet.



Treated Vinyl Upholstery
Resists staining and abrasions

Adjustable Lift-Back
Controlled by Mechlok® raises to 80°

Stirrups
fold back under the seat when not in use

Protective Acrylic Base

Foot Piece
Raises and locks in horizontal position with sliding T-bar

Electric Foot Pedal
for height adjustment (not shown)

Specifications

Table Rating
Lifts up to 400 lbs. Static Tested at 1000 lbs.

Height Range - 22"-35"

Standard Width - 26"

Length Reclined - 6'1"

Table Base Skirting
Acrylic thermo-plastic

Foam
Ultra-Cell® for comfort and shape retention

Shipping Weight
Approximately 250 lbs

Electric Requirements
115 v~, 60 Hz., 5 A (single motor), 10 A (2 motor), where specified - 230 v~, 50 Hz.

Note: Grounding reliability can only be achieved when the equipment is connected to an equivalent receptacle marked hospital only or hospital grade. There is no EMI concern related to the safe operation of this table.

Transportation and Storage Conditions

Ambient Temperature Range:
-30°C to +60°C (-22°F to 140°F)

Relative Humidity
0% to 90% (non-condensing)

Table Care

Cleaning Your Table

Your Hill Table comes upholstered in a highly durable vinyl material. Its appearance is guarded by Prefixx™ brand protective finish. Your upholstery may be cleaned with the Hill Laboratories Vinyl Cleaner or any non-abrasive household detergent without change to surface luster. Stubborn stains can be cleaned with most common solvent cleaners such as naphtha (lighter fluid), rubbing alcohol (IPA type), toluene, Coleman gas, turpentine (paint thinner), and nail polish remover (50/50 mixture of acetone and water) with no change to surface luster or color. One hundred percent acetone can also be used for short periods but it is suggested that it first be tested on an inconspicuous area of the table.

Caution: These solvents are highly flammable; exercise proper care when cleaning with these materials and do not use near open flame or intense heat. Wear rubber gloves during all cleaning activities. When cleaning other parts of your table (besides upholstery) use only nonabrasive household detergents and water.

Cautions and Symbol Explanation

Caution: Be sure to unplug your table before performing any maintenance on the table.

Caution: The table should be checked once a year to make sure all internal and external bolts are secure.

Caution: The table should be in its lowest height position when not attended.

Caution: In case of power outage, the table will rely on the generator back-up of the facility where the table is installed for powering the table to its lowest position.

Caution: The power cord shall be located to avoid objects being rolled over or placed on top of it and also to avoid people tripping over it. Damaged cords should be replaced with another of hospital grade.

Caution: Grounding reliability can only be achieved when the equipment is connected to an equivalent receptacle marked hospital only or hospital grade.

***Symbols* - Each of the symbols below are used in your product labeling. An explanation of each is below.**



Attention Symbol
consult accompanying documents



Dangerous Voltage Symbol



Type BF Applied Part Symbol



Ground Symbol



Alternating Current Symbol

Table Features

Manual Lift Back

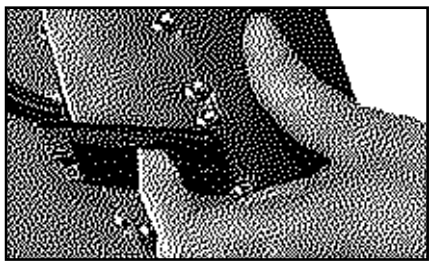

The Manual Lift Back is controlled by a manual switch located on the right side of the chair as you face the back. Press and hold the switch to freely adust the angle of the cushion. Release to lock the cushion in place.

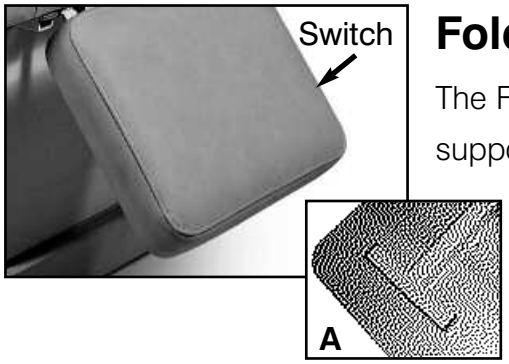

Fold-Down Foot Section

The Fold-Down Foot Section has a slide out T-bar which supports the foot cushion in the “UP” position (see “A”) and slides back under the seat when not in use. For chairs equipped with a manual switch-lock, press and hold the switch (as seen above) to freely adust the angle of the cushion. Release to lock the cushion in place.

Stirrups

The 90MD stirrups are located on both sides of the main seat cushion. Their length can be adjusted by loosening the black knob (A, photo 7), pulling the stirrup out to the desired position, and then tightening the knob again. When not in use, the black foot section folds down and under the cushion (photo 8).

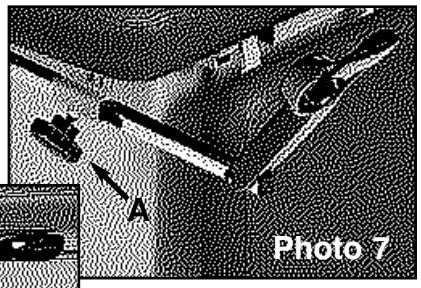

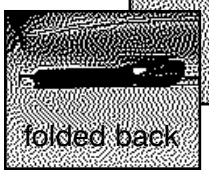

Photo 8

Foot Pedals



The foot pedal controls the height of the chair. Pressing the right side raises the elevation and pressing the left side lowers the height. An additional foot pedal may be added if an optional electric lift back is added.

Table Features

Adjustable Headpiece

The optional adjusting headpiece can be moved in both the forward-backward direction and up-down. To adjust the forward position of the headpiece, loosen the black knob directly behind the head cushion ("A" in photo) and adjust the cushion position. Then, retighten the knob. Repeat the same procedure for the up and down adjustment ("B" in photo). Rated at 20 pounds and tested with 160 pounds.

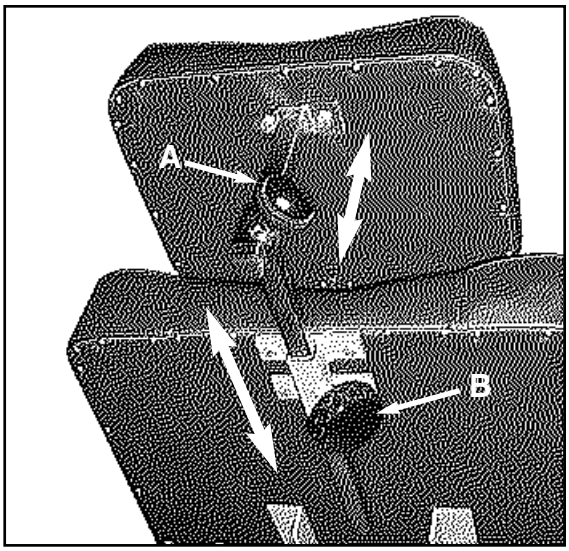

Fold-Down Armrests

When the optional fold-down armrests are positioned in the normal position (shown in Photo A), they can be easily folded back by lifting from the bottom until the armrests are parallel with the back seat cushion (Photo B). Rated at 10 pounds and tested with 80 pounds.

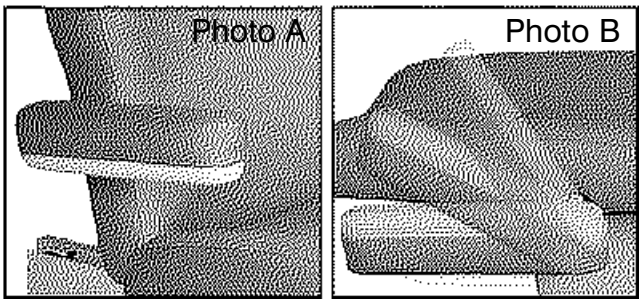

Rocker Foot Pedal

The optional Rocker Foot Pedal operates the height of the table from either side of the table base. Press the right side of the pedal for "UP" and the left side for "DOWN". The pedal will return to the neutral position when released.



Table Features

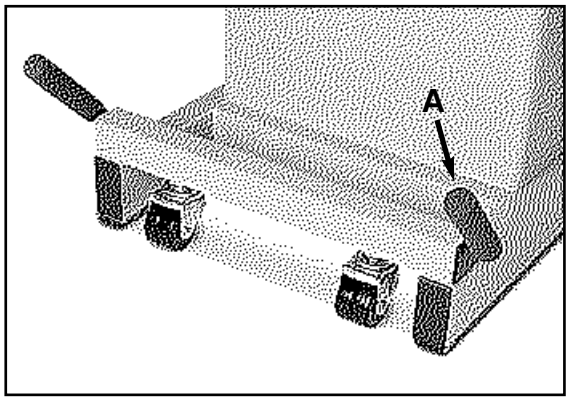

Casters

The optional casters are located at both ends of the table base and facilitate easy table movement. The photo shows the casters in the disengaged position. To move the table you must engage the casters at both ends of the base. To engage, push the handles ("A") down towards the floor - this will lift the table approximately 1/2" from the floor. Repeat this step with the casters at the opposite end of the base. Move the table as desired. Be sure to disengage both sets of casters before using the table. IMPORTANT: Never move table with caster while anyone is on the table.

Examination Armboard



The optional Examination Armboard inserts from either side of the chair and tightens with a knob. It can be positioned and locked at various angles vertically and horizontally as shown in the photos left and right. The Armboard is rated at 10 pounds/tested with 80 pounds.



Diagrams

90E Model Dimensions

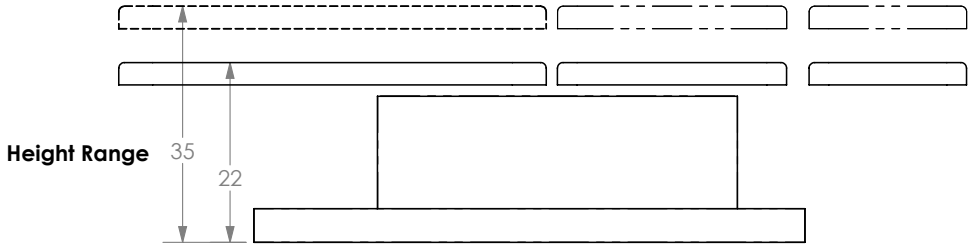

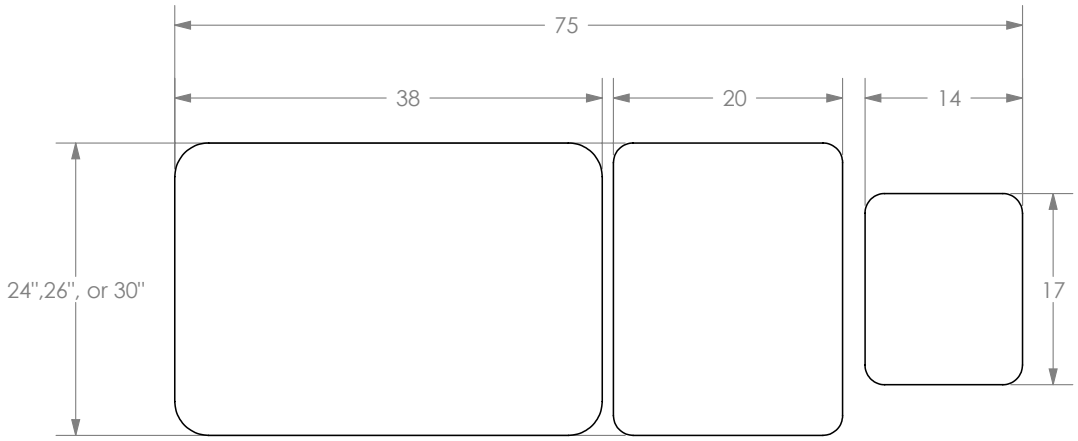

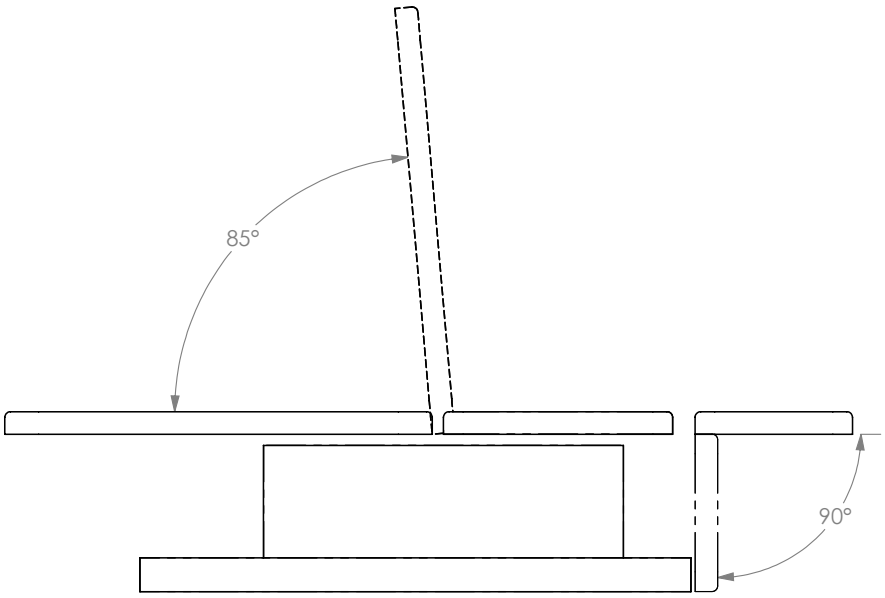

Wiring Diagrams

Single Motor Diagram

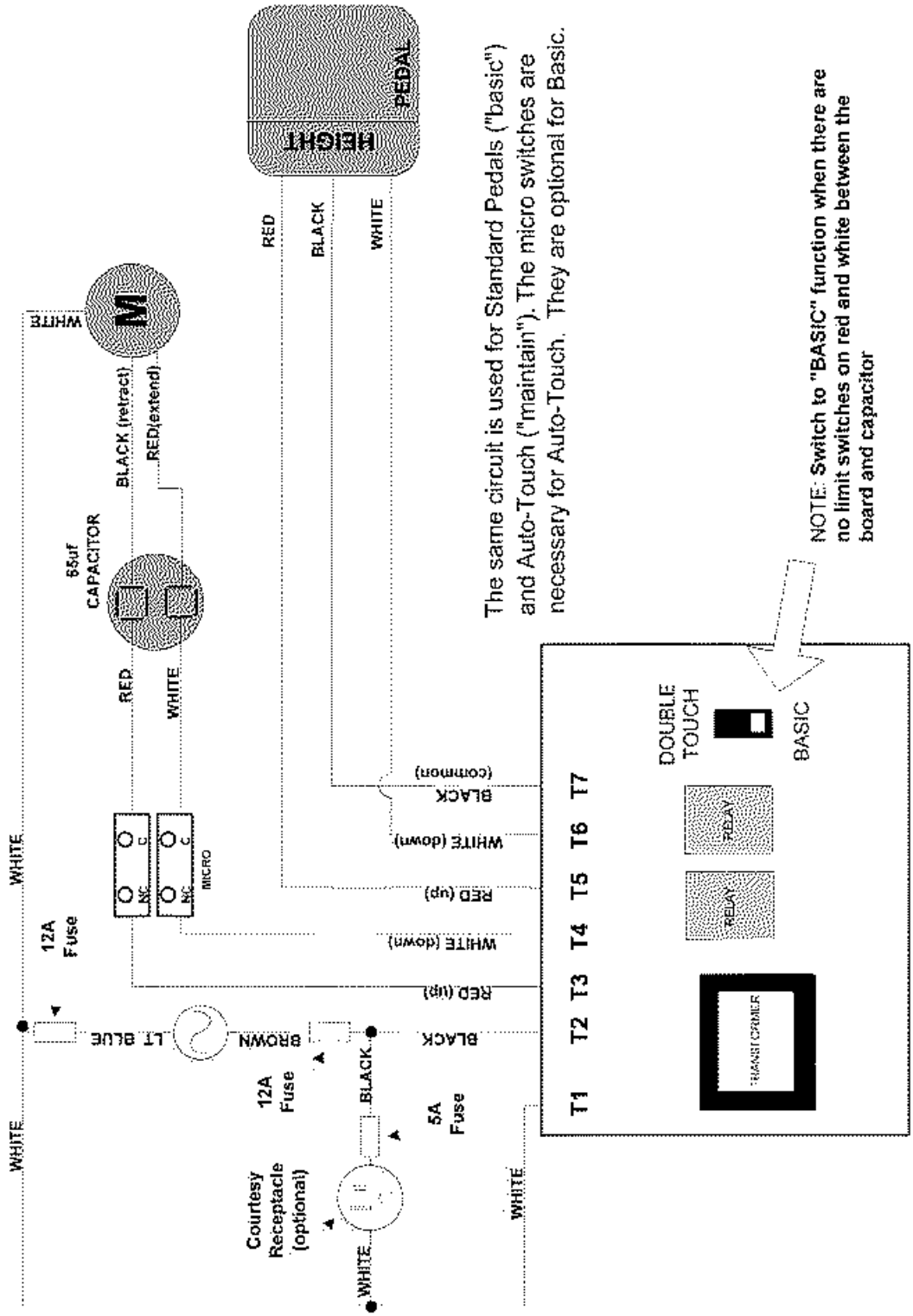

Wiring Diagrams

Two Motor Diagram

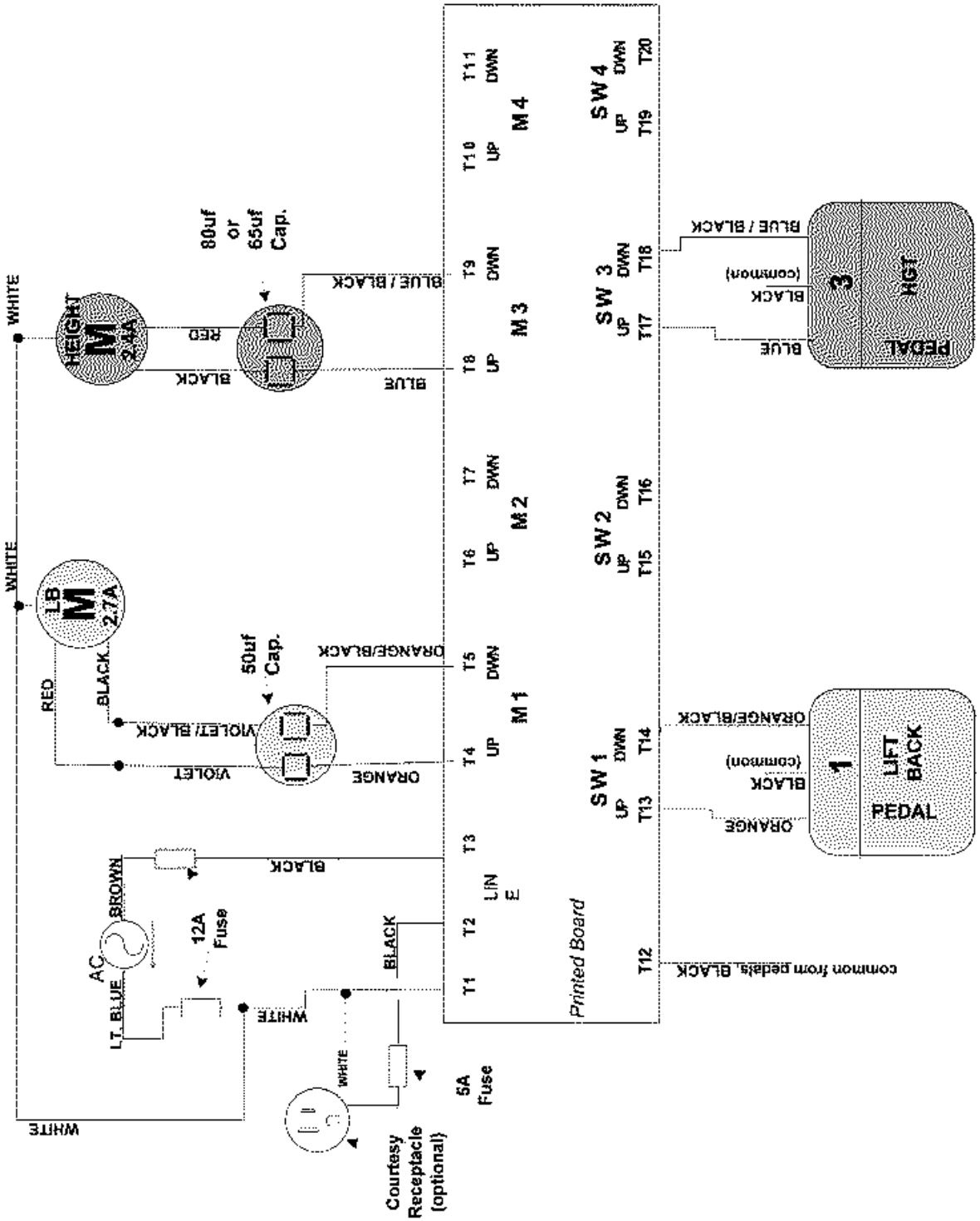



Additional service needed?

Contact your local dealer or reach us directly:

Phone: 1-877-445-5020 • Fax: 610-647-6297 • Email: Support@HillLabs.com

Technicians are available 9 am - 4 pm E.S.T., Monday - Friday.

Tables Manufactured by Hill Laboratories

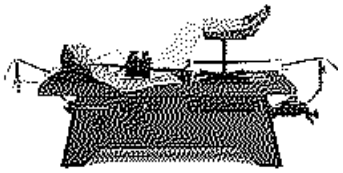

Anatomotor
Massage w/Traction

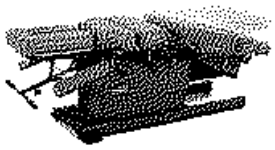

90C



Air90C

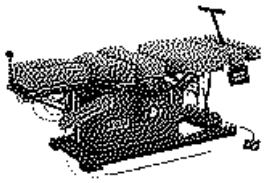

Air-Flex
w/4 Drops

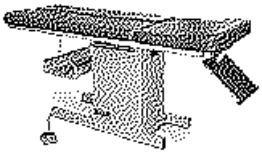

Hi-Lo

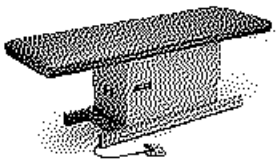

HA90

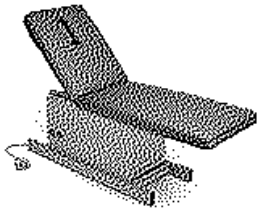

HA90 Lift Back

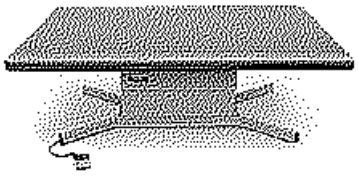

Mat Table

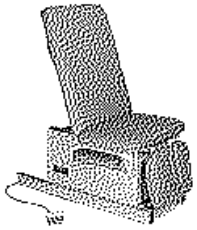

PT Mobilization

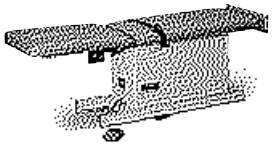

Rath Mechanical
McKenzie Technique



Repex Table
McKenzie Technique



PT Tilting

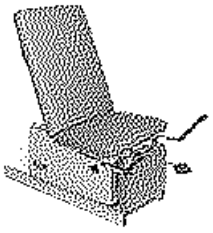

HA90E



90MD

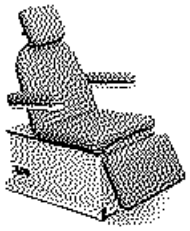

90D Dermatology
Chair

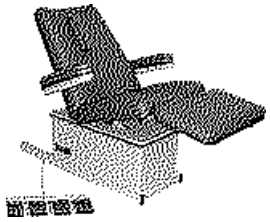

90W Wound Care Chair



Podiatry Model

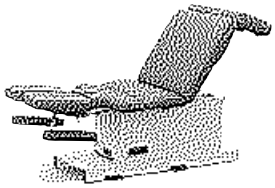

Counterstrain
(multi-positional)

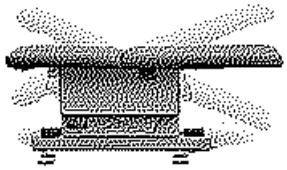

HA90V Tilt
Vascular/Diagnostic

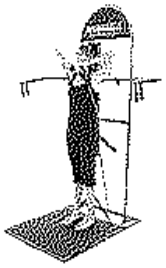

Posture Angel™
Active Rehab System

Hill Laboratories
COMPANY

P.O. Box 2028, 3 Bacton Hill Road, Frazer, PA 19355 • phone 1-877-445-5020 • 610-644-2867 • fax 610-647-6297 • www.HillLabs.com

9316

OMM STUDENT TABLES





Assist 2 Section, Osteopathic tables, provide a strong and rigid surface. All models have a breathing hole and removable plug for prone treatments.

Specifications:

- Safe working load of 550 lbs.
- Generous dimensions of 77 in. long x 28 in. wide
- Expansive height range, from 17 in. to 37 in.
- Choice of A, B, or C head section
- Protective anti-trap design for a Osteopathic Tables
- Retractable wheel design and adjustable foot for stability on uneven surfaces

Preferred Model:

ST250B with standard foot pedal

SOURCE: http://www.assisttables.com/products/therapy-tables/osteopathic-table.php

9317

OMM ELECTRIC TABLE



Hill HA90 Treatment Exam Table
with Power Elevation and Optional 30 Wide Table Top

During manipulation, therapy, or mobilization, the HA90 makes your job easier by elevating to the perfect work height. You will appreciate the reduction in bending and back stress and your patients will appreciate easy access onto the table provided by the variable height. Gliding quietly and smoothly, the HA90 removes all barriers for your patients with smooth electric elevation from 20" to 33".

All mechanisms are completely enclosed to ensure safety for you and your patients. The standard HA90 has a 24" wide top with 1 1/2" foam. Various options such as Liftback, 27" and 30" widths, an extra foot pedal, special-density foam, face cut-out, and a choice of height ranges allow you to customize the HA90 to your specific needs.

Base HA90 Standard Features

- Electric Power Height from 20" to 33"
- Height controlled by foot pedal
- 400lb Lifting capacity (600lb available upon request)
- Higher starting heights also available
- Width 30", Length 6'3", Foam Top 1 1/2"
- Choice of 20 vinyl colors for the top
- Beige, Grey or Black thermo-plastic base cover withMicroban® Antimicrobial Protection
- One-year warranty on all parts (Dealer on-site labor warranty may vary)

SOURCE: http://www.hilllabs.com/physical-therapy/Hill-HA90-Table.php

9328

H BRACE TREATMENT TABLE 30” WIDTH



Options

- **00*** – Special Table Height
- **04*** – Table Safety Strap
- **05*** – Headrest, adj.
- **06*** – Backrest, adj., 350 lbs. weight cap
- **07*** – Nose Cutout
- **08*** – Drawer (N/A with Opt 69)
- **19*** – Slide Shelf, laminate
- **23** – Paper Dispenser
- **25** – Paper Cutter
- **27** – Paper Dispenser & Cutter Combo
- **32** – Pillow, full size
- **35** – Pillow, small
- **69*** – GasSpring Backrest
- **99L*** – Left Hand Table Model

*Factory Installed

Series 4002 Treatment Tables

- H-Brace is recessed into table leg with unique 4-sided “Lock-Tite” joint.
- High pressure laminate legs, apron and stretchers.
- 2” High-Density urethane foam top.
- Resist-All™ vinyl upholstery finish.
- Laminate: Natural Oak, Wild Cherry, or Folkstone Gray.
- Upholstery: Choice of (18) standard vinyl colors.

- **English**
- **Metric**

Weight Capacity: 400 lbs.

MODEL #	LENGTH	WIDTH	HEIGHT
4002-030	72"	30"	31"



SOURCE: http://www.hausmann.com/product_pages/m002_tt114/Model_4002.html

9849

GE Healthcare

Panda Warmers

A warm welcome for your precious newborns



Panda

9849

Technical Specifications

Mechanical

Panda Bedded Warmer

- Height: 193–218 cm
- Width: 64 cm
- Depth: 119 cm
- Weight: 100 kg
- Mattress Size: 66 x 48 x 2 cm
- Bed Capacity: 14 kg
- Bed Tilt: ± 12° continuous tilt
- Maximum patient weight: 40 kg (88 lbs)

Panda Freestanding Warmer

- Height: 195 cm
- Width: 85 cm
- Depth: 77 cm
- Weight: 43 kg

Panda Wall Mount Warmer

- Height: 69 cm
- Width: 40 cm
- Depth: 49 cm
- Weight: 15 kg

Accessories – Bedded Only

- Storage drawer package: 6.8 kg max load
- Instrument shelf: 3.6 kg max load

Operating Environment

- Temperature: 18°C to 30°C
- Humidity: 5% to 75% non-condensing relative humidity
- Pressure: 70–106 kPa
- Air Velocity: up to 0.3 m/sec
- Water Ingress: IPXO

Electrical Power Requirements

- 5.25 A @ 100v ~, 50/60 Hz
- 4.57 A @ 115v ~, 50/60 Hz
- 2.39 A @ 200v ~, 50/60 Hz
- 2.28 A @ 230v ~, 50/60 Hz
- 2.19 A @ 240v ~, 50/60 Hz

Integrated Resuscitation Characteristics

- Input pressure: 40-75 psi (275–517 kPa)
- Minimum Input Flow: 70 lpm
- Vacuum Range: 0–150 mmHg
- Vacuum Accuracy: ± 5% of full scale
- Flow Range: 0–15 lpm
- Air/O_2 Blender Range: 21–100% O_2
- Blender Accuracy: ± 5% O_2

Adjustable PIP (For T-Piece Resuscitation System only)

- Maximum PIP: 45 ± 5 cm H_2O
- PIP Override: > 30 ± 4 cm H_2O
- Flow Capacity: 15 lpm

Integrated SpO_2 Characteristics

Parameter	Masimo Rainbow SET®	Nellcor Oximax™
Measurement Range		
SpO_2	30–100%	1–100%
Pulse Rate	25–240 bpm	20–300 bpm
SpO_2 Accuracy		
From 70–100%	± 3 digits for neonates	± 3 digits for neonates
Below 69%	Unspecified	Unspecified
Pulse Rate Accuracy		
No Motion	± 3 bpm	± 3 bpm
Motion	± 5 bpm	N/A

System Performance

- Warmer expected: Approx. 8 years service life
- Heater Element: 360 Watts
- Patient temperature: ± 0.3°C @ 30°C measurement accuracy: to 42°C
- Observation Light: 2 dimmable 35W halogen bulbs: est. life 3000 hrs
- Procedure Light: Avg. 2000 lux (at nominal voltage); est. life 3000 hrs

User control settings

- Patient Control: 34–37.5°C in 0.1° temperature increments
- Radiant heat power: 0–100% in 5% increments

Irradiance

- Bedded Warmer 100% Heater Power: 31 mW/cm^2
- Non-Bedded Warmer (at Highest Mattress Height Position): 100% Heater Power: 31 mW/cm^2
- Heater Warmup Time at 100% Power: less than 3 minutes

Weight scale performance

- Functional range: 300 g to 8 kg
- Accuracy: ±10 g


100%
7 lbs 8 oz

SECTION 12 2413

ROLLER WINDOW SHADES

PART 1 - GENERAL

1.1 SUMMARY

A. Section Includes: Roller window shades and supplementary items necessary to complete their installation.

1. Manually operated roller shades.
2. Motor-operated roller shades.

B. Related Requirements:

1. Motorized Units: Division 26 Sections for electrical service and connections for motor operators, controls, limit switches, and other powered devices and for system disconnect switches for motorized shade operation.

1.2 ACTION SUBMITTALS

A. Product Data: Manufacturer's technical literature for each product and system indicated.

1. Include styles, material descriptions, construction details, dimensions of individual components and profiles, features, finishes, and operating instructions for roller shades.

B. Shop Drawings: Show fabrication and installation details for roller shades, including shadeband materials, their orientation to rollers, and their seam and batten locations.

1. Motor-Operated Shades: Include details of installation and diagrams for power, signal, and control wiring.

C. Samples for Verification: For each type of roller shade.

1. Shadeband Material: Not less than 10 in (250 mm) square. Mark inside face of material if applicable.
2. Roller Shade: Full-size operating unit, not less than 16 in (400 mm) wide by 36 in (900 mm) long for each type of roller shade indicated.
3. Installation Accessories: Full-size unit, not less than 10 in (250 mm) long.

D. Roller-Shade Schedule: Use same designations indicated on Drawings.

1.3 INFORMATIONAL SUBMITTALS

A. Manufacturer's Project Acceptance Document: Certification by the manufacturer that its product(s) are approved, acceptable, suitable for use in specific locations, for specific details, and for applications indicated, specified, or required, and that a warranty will be issued.

B. Product Test Reports: For each type of shadeband material, written reports based on evaluation of comprehensive tests performed by qualified testing agency indicating that each product complies with requirements.

C. Field Quality Control Reports: Written report of testing and inspection required by "Field Quality Control".

D. Qualification Data:

1. For firms and persons specified in "Quality Assurance" to demonstrate their capabilities and experience. Include list of completed projects.

E. Warranty: Sample of warranty.

1. Provide manufacturer's written warranty covering materials and installation (labor) stating obligations, remedies, limitations and exclusions.

1.4 CLOSEOUT SUBMITTALS

A. Maintenance Data: For roller shades to include in maintenance manuals.

1. Methods for maintaining roller window shades and finishes.
2. Precautions about cleaning materials and methods that could be detrimental to fabrics, finishes, and performance.
3. Operating hardware.
4. Motorized shade operator.

1.5 MAINTENANCE MATERIAL SUBMITTALS

A. Furnish extra materials described below that match products installed and that are packaged with protective covering for storage and identified with labels describing contents.

1. Rollers Shades: Before installation begins, for each size, color, texture, and pattern indicated, full-size units equal to 5 percent of amount installed, but not fewer than 2 units.

1.6 QUALITY ASSURANCE

A. Installer Qualifications: Fabricator of products.

1. Experience: Installer's personnel with not less than 5 years of experience in the successful performance of Work similar to scope of this Project.
2. Supervision: Installer shall maintain a competent supervisor at Project while the Work is in progress, and who has not less than 5 years of experience installing products and systems similar to scope of this Project.
3. Manufacturer Acceptance: Installer shall be certified, approved, licensed, or acceptable to manufacturer to install products.

B. Mock-ups: Prior to fabrication and installation, build mock-up for each form of construction and finish required to verify selections made under sample Submittals and to demonstrate aesthetic effects and qualities of materials and execution. Build mock-up using materials indicated for the completed Work.

1. Build mock-up in the location and of the size indicated or, if not indicated, as directed by Architect. Contractor shall provide structural support framework.

    a. Show typical components, attachments to building structure, and requirements of installation.

2. Notify Architect seven days in advance of the dates and times when mock-up will be installed.
3. Obtain Architect's acceptance of mock-ups before starting fabrication or installation.
4. Acceptance of mock-ups does not constitute acceptance of deviations from the Contract Documents contained in mock-ups unless such deviations are specifically noted by Contractor and accepted by Architect in writing.
5. Demolish and remove mock-ups when directed by Architect unless accepted to become part of the completed Work.

1.7 PRE-INSTALLATION CONFERENCE

A. Pre-Installation Conference: Before Work begins, conduct conference at Project site.

1. Participants:

    a. Architect.
    b. Contractor, including superintendent.
    c. Installer, including project manager and supervisor.
    d. If requested, Manufacturer/fabricator's qualified technical representative.
    e. Installers of other construction interfaced with Work.

2. Minimum Agenda: Installer shall demonstrate understanding of the Work required by describing detailed procedures for preparing, installing, and cleaning the Work. Demonstration shall include, but not be limited to, following topics:

    a. Tour representative areas of Work, inspect and discuss condition of substrate, and other preparatory work performed by other trades.
    b. Review Contract Document Requirements.
    c. Review approved submittals.
    d. Review inspection and testing requirements.
    e. Review environmental conditions and procedures for coping with unfavorable conditions.
    f. Resolve deviations or differences between Contract Documents and the manufacturer/fabricator's specifications.

3. Record discussions, including decisions and agreements reached and prepare report.

1.8 DELIVERY, STORAGE, AND HANDLING

A. Deliver roller shades in factory packages, marked with manufacturer, product name, and location of installation using same designations indicated on Drawings.

1.9 FIELD CONDITIONS

A. Environmental Limitations: Do not install roller shades until construction and finish work in spaces, including painting, is complete and dry and ambient temperature and humidity conditions are maintained at the levels indicated for Project when occupied for its intended use.

B. Field Measurements: Where products and systems are indicated to fit walls and other construction, verify dimensions by field measurements before fabrication.

1.10 COORDINATION

A. Coordinate installation of products and systems with interfacing and adjoining construction to provide a successful installation without failure.

1.11 WARRANTY

A. Manufacturer's Warranty: Furnish manufacturer's written material and labor warranty signed by an authorized representative using manufacturer's standard form agreeing to furnish materials and labor required to repair or replace work which exhibits material defects caused by manufacture or design and installation of product. "Defects" is defined to include but not limited to deterioration or failure to perform as required.

1. Coverage of warranty includes but is not limited to the following:

    a. Fabric failure includes deterioration, sag, warp, fade or will not remain fit for use.

2. Warranty Period: Manufacturer shall warrant the products to be free from material and labor Defects for the following periods from date of Substantial Completion

    a. Manual operating components: 10 years.
    b. Shade Cloth: 10 years.
    c. Motors and electronic components: 5 years.

PART 2 - PRODUCTS

2.1 MANUFACTURERS

A. Acceptable Manufacturers: Subject to compliance with requirements of Contract Documents as judged by the Architect, provide product by one of manufacturers listed. If not listed, submit as substitution according to the Conditions of the Contract and Division 01 Section "Substitution Procedures".

1. Draper Inc.
2. Hunter Douglas Contract.
3. Lutron Electronics Co., Inc.
4. Mariak Contract
5. MechoShade Systems, Inc.

B. Basis of Design (Product Standard): Contract Documents are based on products and systems specified to establish a standard of quality. Other manufacturers offering products having equivalent characteristics may be considered, provided deviations are minor and comply with requirements of Contract Documents as judged by the Architect.

1. Manufacturer and Product: As scheduled or as indicated in Design Selections.

2.2 MATERIALS, GENERAL

A. Single Source Responsibility: Furnish each type of product from single manufacturer. Provide secondary materials only as recommended by manufacturer of primary materials.

2.3 SHADE SCHEDULE

A. WS-1, WS-2: Refer to Interior Finish Legend

2.4 MANUALLY OPERATED SHADES

A. Chain-and-Clutch Operating Mechanisms: With continuous-loop bead chain and clutch that stops shade movement when bead chain is released; permanently adjusted and lubricated.

1. Bead Chains: Manufacturer's standard, Stainless steel.

    a. Loop Length: Full length of roller shade, unless otherwise indicated.
    b. Limit Stops: Provide upper and lower ball stops.
    c. Chain-Retainer Type: Clip, Chain tensioner and mounting as selected by Architect.

2. Spring Lift-Assist Mechanisms: Manufacturer's standard for balancing roller-shade weight and lifting heavy roller shades.

    a. Provide for shadebands that weigh more than 10 lb (4.5 kg) or for shades as recommended by manufacturer, whichever criteria are more stringent.

B. Rollers - Single: Corrosion-resistant steel or extruded-aluminum tubes of diameters and wall thicknesses required to accommodate operating mechanisms and weights and widths of shadebands indicated without deflection. Provide with permanently lubricated drive-end assemblies and idle-end assemblies designed to facilitate removal of shadebands for service.

1. Roller Drive-End Location: As indicated on Drawings.
2. Direction of Shadeband Roll: Regular, from back of roller, unless otherwise indicated.
3. Shadeband-to-Roller Attachment: Manufacturer's standard method.

C. Rollers - Double: Corrosion-resistant steel or extruded-aluminum tubes of diameters and wall thicknesses required to accommodate operating mechanisms and weights and widths of shadebands indicated without deflection. Provide with permanently lubricated drive-end assemblies and idle-end assemblies designed to facilitate removal of shadebands for service.

1. Double-Roller Mounting Configuration: Offset, outside roller over and inside roller under, unless otherwise indicated.
2. Inside Roller:

    a. Drive-End Location: As indicated on Drawings.
    b. Direction of Shadeband Roll: Regular, from back of roller.

3. Outside Roller:

    a. Drive-End Location: As indicated on Drawings.
    b. Direction of Shadeband Roll: Reverse, from front of roller

4. Shadeband-to-Roller Attachment: Manufacturer's standard method.

2.5 MOTOR-OPERATED

A. Motorized Operating System: Provide factory-assembled, shade-operator system of size and capacity and with features, characteristics, and accessories suitable for conditions indicated, complete with electric motor and factory-prewired motor controls, power disconnect switch, enclosures protecting controls and operating parts, and accessories required for reliable operation without malfunction. Include wiring from motor controls to motors. Coordinate operator wiring requirements and electrical characteristics with building electrical system.

1. Electrical Components: Listed and labeled as defined in NFPA 70, by a qualified testing agency, and marked for intended location and application.
2. Electric Motor: Manufacturer's standard tubular, enclosed in roller.

    a. Electrical Characteristics: Single phase, 110 V, 60 Hz, unless recommended otherwise by manufacturer.

3. Remote Control: Electric controls with NEMA ICS 6, Type 1 enclosure for recessed or flush mounting. Provide the following for remote-control activation of shades:

    a. Individual Switch Control Station: Momentary-contact, three -position, rocker-style, wall-switch-operated control station with open, close, and center off functions.
    b. Group Control Station: Momentary-contact, three-position, rocker-style, wall-switch-operated control station with open, close, and center off functions for single-switch group control.
    c. Individual/Group Control Station: Momentary-contact, three-position, rocker-style, wall-switch-operated control station with open, close, and center off functions for individual and group control.
    d. Color: As selected by Architect from manufacturer's full range.

4. Limit Switches: Adjustable switches interlocked with motor controls and set to stop shades automatically at fully raised and fully lowered positions.
5. Operating Features:

    a. Group switching with integrated switch control; single faceplate for multiple switch cutouts.
    b. Capable of interface with audiovisual control system.
    c. Override switch, if applicable.

B. Rollers - Single: Corrosion-resistant steel or extruded-aluminum tubes of diameters and wall thicknesses required to accommodate operating mechanisms and weights and widths of shadebands indicated without deflection. Provide with permanently lubricated drive-end assemblies and idle-end assemblies designed to facilitate removal of shadebands for service.

1. Roller Drive-End Location: As indicated on Drawings.
2. Direction of Shadeband Roll: Regular, from back of roller, unless otherwise indicated.
3. Shadeband-to-Roller Attachment: Manufacturer's standard method.

C. Rollers - Double: Corrosion-resistant steel or extruded-aluminum tubes of diameters and wall thicknesses required to accommodate operating mechanisms and weights and widths of shadebands indicated without deflection. Provide with permanently lubricated drive-end assemblies and idle-end assemblies designed to facilitate removal of shadebands for service.

1. Double-Roller Mounting Configuration: Offset, outside roller over and inside roller under, unless otherwise indicated.

2. Inside Roller:

    a. Drive-End Location: As indicated on Drawings.
    b. Direction of Shadeband Roll: Regular, from back of roller.

3. Outside Roller:

    a. Drive-End Location: As indicated on Drawings.
    b. Direction of Shadeband Roll: Reverse, from front of roller

4. Shadeband-to-Roller Attachment: Manufacturer's standard method.

2.6 SHADEBANDS AND ACCESSORIES

A. Shadebands – Single Roller:

1. Shadeband Material: Refer to Shade Schedule for type. Color as scheduled or as indicated in Design Selections.
2. Shadeband Bottom (Hem) Bar: Steel or extruded aluminum.

    a. Type: Enclosed in sealed pocket of shadeband material, unless otherwise indicated.
    b. Color and Finish: As selected by Architect from manufacturer's full range.

B. Inside Shadebands – Double Roller:

1. Shadeband Material: Refer to Shade Schedule for type. Color as scheduled or indicated in Design Selections.
2. Shadeband Bottom (Hem) Bar: Steel or extruded aluminum.

    a. Type: Enclosed in sealed pocket of shadeband material
    b. Color and Finish: As selected by Architect from manufacturer's full range

C. Outside Shadebands – Double Roller:

1. Shadeband Material: Refer to Shade Schedule for type. Color as scheduled or indicated in Design Selections.
2. Shadeband Bottom (Hem) Bar: Steel or extruded aluminum.

    a. Type: Exposed with endcaps and integral light seal with bottom (sill) channels.
    b. Color and Finish: As selected by Architect from manufacturer's full range.

D. Installation Accessories:

1. Exposed Headbox: Rectangular, extruded-aluminum enclosure including front fascia, top and back covers, endcaps, and removable bottom closure.

    a. Height: Manufacturer's standard height required to enclose roller and shadeband when shade is fully open, but not less than 4 in (100 mm).

2. Endcap Covers: To cover exposed endcaps.
3. Bottom (Sill) Channel or Angle: With light seals and designed to eliminate light gaps at bottoms of shades when shades are closed.

4. Installation Accessories Color and Finish: As selected from manufacturer's full range.

E. Mounting Hardware: Brackets or endcaps, corrosion resistant and compatible with roller mounting configuration, roller assemblies, operating mechanisms, installation accessories, and installation locations and conditions indicated.

F. Roller-Coupling Assemblies: Coordinated with operating mechanism and designed to join up to three inline rollers into a multiband shade that is operated by one roller drive-end assembly.

2.7 SHADEBAND MATERIALS

A. Shadeband Material Flame-Resistance Rating: Comply with NFPA 701. Testing by a qualified testing agency. Identify products with appropriate markings of applicable testing agency.

B. Shade Band Material: Manufacturer's standard PVC-free shade band material.

2.8 ROLLER-SHADE FABRICATION

A. Product Safety Standard: Fabricate roller shades to comply with WCMA A 100.1, including requirements for flexible, chain-loop devices; lead content of components; and warning labels.

B. Unit Sizes: Fabricate units in sizes to fill window and other openings as follows, measured at 74 deg F (23 deg C):

1. Between (Inside) Jamb Installation: Width equal to jamb-to-jamb dimension of opening in which shade is installed less 1/4 in (6 mm) per side or 1/2 in (12 mm) total, plus or minus 1/8 in (3 mm). Length equal to head-to-sill or -floor dimension of opening in which shade is installed less 1/4 in (6 mm), plus or minus 1/8 in (3 mm).

C. Shadeband Fabrication: Fabricate shadebands without battens or seams to extent possible except as follows:

1. Vertical Shades: Where width-to-length ratio of shadeband is equal to or greater than 1:4, provide battens and seams at uniform spacings along shadeband length to ensure shadeband tracking and alignment through its full range of movement without distortion of the material. Obtain approved locations from Architect prior to fabrication.
2. Railroaded Materials: Railroad material where material roll width is less than the required width of shadeband and where indicated. Provide battens and seams as required by railroaded material to produce shadebands with full roll-width panel(s) plus, if required, one partial roll-width panel located at top of shadeband.

PART 3 - EXECUTION

3.1 EXAMINATION

A. Acceptance of Surfaces and Conditions: Examine substrates to receive products and systems and associated work for compliance with requirements and other conditions affecting performance. Proceed only when unsatisfactory conditions have been corrected in a manner complying with Contract Documents. Starting work within a particular area will be construed as acceptance of surface conditions.

3.2 PREPARATION

A. General: Comply with manufacturer's instructions, recommendations, and specifications for cleaning and surface preparation. Surfaces shall have no defects, contaminants, or errors which would result in poor or potentially defective installation or would cause latent defects in Work.

3.3 ROLLER-SHADE INSTALLATION

A. Installation Quality Standards: In addition to standards listed elsewhere, perform Work according to following, unless otherwise specified:

1. Respective manufacturer/fabricator's written installation instructions.
2. Accepted submittals.
3. Contract Documents.

B. Install roller shades level, plumb, and aligned with adjacent units according to manufacturer's written instructions.

1. Opaque Shadebands: Located so shadeband is not closer than 2 in (50 mm) to interior face of glass. Allow clearances for window operation hardware.

C. Electrical Connections: Connect motor-operated roller shades to building electrical system.

3.4 FIELD QUALITY CONTROL

A. Manufacturer's Field Service: Manufacturer's qualified technical representative shall periodically inspect Work to ensure installation is proceeding in accordance with manufacturer's designs, recommendations, instructions, and warranty requirements. Representative shall submit written reports of each visit indicating observations, findings, and conclusions of inspection.

1. Manufacturer's Technical Representative Qualifications: Direct employee of technical services department of manufacturer with experience in providing recommendations, observations, evaluations, and problem diagnostics.

3.5 ADJUSTING

A. Adjust and balance roller shades to operate smoothly, easily, safely, and free from binding or malfunction throughout entire operational range.

3.6 CLEANING AND PROTECTION

A. Clean roller-shade surfaces after installation, according to manufacturer's written instructions.

B. Provide final protection and maintain conditions, in a manner acceptable to manufacturer and Installer, that ensure that roller shades are without damage or deterioration at time of Substantial Completion.

C. Replace damaged roller shades that cannot be repaired, in a manner approved by Architect, before time of Substantial Completion.

3.7 DEMONSTRATION

A. Engage a factory-authorized service representative to train Owner's maintenance personnel to adjust, operate, and maintain motor-operated roller shades.

3.8 FINISH SCHEDULE

A. See Interior Finish Legend on drawings.

END OF SECTION

SECTION 12 3553

LABORATORY CASEWORK

PART 1 - GENERAL

1.1 SUMMARY

A. Work required for this section includes metal laboratory casework with stainless steel and phenolic countertops along with supplementary items necessary to complete their installation.

B. Related Section:

1. Division 06 Section "Interior Architectural Woodwork" for shop-fabricated plastic laminate-clad and wood veneer-clad casework, millwork, and cabinetry.

1.2 ACTION SUBMITTALS

A. Product Data: Manufacturer's technical literature for each product and system indicated.

1. Include manufacturer's specifications for materials, finishes, construction details, installation instructions, and recommendations for maintenance.

B. Shop Drawings: Show details of fabrication and installation, including plans, elevations, sections, details of components and attachments to other work. Distinguish between shop and field-assembled work.

1. Indicate locations of hardware and keying of locks.
2. Indicate locations and types of service fittings.
3. Indicate locations of blocking and reinforcements required for installing laboratory casework.
4. Include details of utility spaces showing supports for conduits and piping.
5. Include details of exposed conduits, if required, for service fittings.
6. Indicate locations of and clearances from adjacent walls, doors, windows, other building components, and other laboratory equipment.
7. Include coordinated dimensions for laboratory equipment specified in other Sections.

C. Samples for Initial Selection: For factory-applied finishes and other materials requiring color selection.

D. Samples for Verification: Unless otherwise directed, approved full-size Samples may become part of the completed Work, if in an undisturbed condition at time of Substantial Completion. Notify Architect of their exact locations. If not incorporated into the Work, retain acceptable full-size Samples at Project site and remove when directed by Architect.

1. One full-size, finished base cabinet complete with hardware, doors, and drawers.
2. One full-size, finished wall cabinet complete with hardware, doors, and adjustable shelves.
3. One Sample each of hinged and sliding doors.
4. 6-inch- (150-mm-) square Samples for each type of countertop material.
5. One of each service fitting specified, complete with accessories and specified finish.

6. One of each type of sink and accessory item specified.
7. One of each type of hardware item specified.

1.3 INFORMATIONAL SUBMITTALS

A. Qualification Data:

1. For firms and persons specified in "Quality Assurance" to demonstrate their capabilities and experience. Include list of completed projects.

B. Product Test Reports for Casework: Based on evaluation of comprehensive tests performed by a qualified testing agency, indicating compliance of laboratory casework with requirements of specified product standard.

C. Product Test Reports for Countertop Surface Material: Based on evaluation of comprehensive tests performed by a qualified testing agency, indicating compliance of laboratory countertop surface materials with requirements specified for chemical and physical resistance.

D. Field Quality Control Reports: Written report of testing and inspection required by "Field Quality Control".

1.4 CLOSEOUT SUBMITTALS

A. Furnish complete touchup kit for each type and color of metal laboratory casework provided. Include fillers, primers, paints, and other materials necessary to perform permanent repairs to damaged laboratory casework finish.

B. Furnish complete touchup kit for each type and color of wood laboratory casework provided. Include scratch fillers, stains, finishes, and other materials necessary to perform permanent repairs to damaged laboratory casework finish.

1.5 QUALITY ASSURANCE

A. Manufacturer Qualifications: Manufacturer with not less than 5 years of experience in the successful production and in-service performance of products and systems similar to scope of this Project.

B. Installer Qualifications:

1. Experience: Installer's personnel with not less than 5 years of experience in the successful performance of Work similar to scope of this Project.
2. Supervision: Installer shall maintain a competent supervisor at Project while the Work is in progress, and who has not less than 5 years of experience installing products and systems similar to scope of this Project.

C. Casework Product Standard: Comply with SEFA 8, "Laboratory Furniture - Casework, Shelving and Tables - Recommended Practices."

D. Flammable Liquid Storage: Where cabinets are indicated for solvent or flammable liquid storage, provide units that are listed and labeled as complying with requirements in NFPA 30 by a testing and inspecting agency acceptable to authorities having jurisdiction.

E. Flammable Liquid Storage: Where cabinets are indicated for solvent or flammable liquid storage, provide units that are listed and labeled as complying with requirements in NFPA 30 by FM Approvals.

F. Electrical Components, Devices, and Accessories: Listed and labeled as defined in NFPA 70, by a qualified testing agency, and marked for intended location and application.

G. Mock-ups: Prior to fabrication and installation, build mock-up for each form of construction and finish required to verify selections made under sample Submittals and to demonstrate aesthetic effects and qualities of materials and execution. Build mock-up using materials indicated for the completed Work.

1. Build mock-up in the location and of the size indicated or, if not indicated, as directed by Architect. Contractor shall provide structural support framework.

    a. Show typical components, attachments to building structure, and requirements of installation.

2. Notify Architect seven days in advance of the dates and times when mock-up will be installed.
3. Obtain Architect's acceptance of mock-ups before starting fabrication or installation.
4. Acceptance of mock-ups does not constitute acceptance of deviations from the Contract Documents contained in mock-ups unless such deviations are specifically noted by Contractor and accepted by Architect in writing.
5. Demolish and remove mock-ups when directed by Architect unless accepted to become part of the completed Work.

1.6 PRE-INSTALLATION CONFERENCE

A. Pre-Installation Conference: Before Work begins, conduct conference at Project site.

1. Participants:

    a. Architect.
    b. Contractor, including superintendent.
    c. Installer, including project manager and supervisor.
    d. If requested, Manufacturer's qualified technical representative.
    e. Installers of other construction interfaced with Work.

2. Minimum Agenda: Installer shall demonstrate understanding of the Work required by describing detailed procedures for preparing, installing, and cleaning the Work. Demonstration shall include, but not be limited to, following topics:

    a. Tour representative areas of Work, inspect and discuss condition of substrate, and other preparatory work performed by other trades.
    b. Review Contract Document requirements.
    c. Review approved submittals.
    d. Review inspection and testing requirements.
    e. Review environmental conditions and procedures for coping with unfavorable conditions.
    f. Resolve deviations or differences between Contract Documents and the manufacturer's specifications.

3. Record discussions, including decisions and agreements, and prepare report.

1.7 DELIVERY, STORAGE, AND HANDLING

A. Protect finished surfaces during handling and installation with protective covering of polyethylene film or other suitable material.

1.8 PROJECT CONDITIONS

A. Environmental Limitations: Do not deliver or install laboratory casework until building is enclosed, utility roughing-in and wet work are complete and dry, and temporary HVAC system is operating and maintaining temperature and relative humidity at occupancy levels during the remainder of the construction period.

B. Field Measurements: Where products and systems are indicated to fit walls and other construction, verify dimensions by field measurements before fabrication.

1.9 COORDINATION

A. Coordinate installation of products and systems with interfacing and adjoining construction to provide a successful installation without failure.

PART 2 - PRODUCTS

2.1 MATERIALS, GENERAL

A. Single Source Responsibility: Furnish each type of product from single manufacturer. Provide secondary materials only as recommended by manufacturer of primary materials.

1. Obtain countertops, sinks, accessories, and service fittings from casework manufacturer.

~~2.2 METAL CABINET MATERIALS~~

~~A. Metal: Cold-rolled, commercial steel (CS) sheet, complying with ASTM A 1008/A 1008M; matte finish; suitable for exposed applications.~~

~~2.3 AUXILIARY CABINET MATERIALS~~

~~A. Acid Storage-Cabinet Lining: 1/4-inch- (6-mm-) thick, glass-fiber cement board complying with ASTM C 1186, polyethylene or polypropylene, or polyethylene, polypropylene, epoxy, or phenolic-composite lining material.~~

~~B. Glass for Glazed Doors: Clear tempered glass complying with ASTM C 1048, Kind FT, Condition A, Type I, Class 1, Quality-Q3; not less than 5.0 mm thick.~~

~~C. Frameless Glass Doors: Clear tempered glass complying with ASTM C 1048, Kind FT, Condition A, Type I, Class 1, Quality-Q3; not less than 5.0 mm thick; with exposed edges seamed before tempering.~~

2.4 CABINET AND COUNTERTOP MATERIALS

A. Phenolic Composite: Solid, high-pressure decorative laminate, complying with NEMA LD 3, Grade CGS.

1. Acceptable Manufacturers: Subject to compliance with requirements of Contract Documents as judged by the Architect, provide product by one of manufacturers listed. If not listed, submit as substitution according to the Conditions of the Contract and Division 01 Section "Substitution Procedures".

   a. Arbonite; a division of ITW Canada.
   b. Epoxyn Products.
   c. Formica Corporation.
   d. Nevamar Company, LLC.
   e. NuLab Furniture Corporation.
   f. Panolam Industries International Incorporated; Pionite Decorative Surfaces.
   g. Trespa North America.

2. Chemical Resistance: Composite countertop material has the following ratings when tested with indicated reagents according to NEMA LD 3, Test Procedure 3.4.5:

   a. No Effect: Acetic acid (98 percent), acetone, ammonium hydroxide (28 percent), benzene, carbon tetrachloride, dimethyl formamide, ethyl acetate, ethyl alcohol, formaldehyde (37 percent), furfural, hydrochloric acid (37 percent), hydrofluoric acid (48 percent), nitric acid (30 percent), phosphoric acid (85 percent), sodium hydroxide (20 percent), sulfuric acid (33 percent), toluene, and zinc chloride.

3. Color: As selected by Architect from manufacturer's full range.

2.5 SINK MATERIALS

A. Stainless-Steel Sheet: ASTM A 240/A 240M, Type 304.

2.6 METAL CABINETS

~~A. Acceptable Manufacturers: Subject to compliance with requirements of Contract Documents as judged by the Architect, provide product by one of manufacturers listed. If not listed, submit as substitution according to the Conditions of the Contract and Division 01 Section "Substitution Procedures".~~

~~1. Keur Industries, Inc.~~
~~2. Kewaunee Scientific Corporation; Laboratory Products Group.~~
~~3. Lab Design/United Hospital Supply Corp.~~
~~4. Mott Manufacturing Ltd.~~
~~5. Thermo Fisher Scientific (formerly Fisher Hamilton).~~

~~B. Fabrication: Assemble and finish units at point of manufacture. Use precision dies for interchangeability of like-size drawers, doors, and similar parts. Perform assembly on precision jigs to provide units that are square. Reinforce units with angles, gussets, and channels. Except where otherwise specified, integrally frame and weld cabinet bodies to form dirt and vermin-resistant enclosures. Where applicable, reinforce base cabinets for sink support. Maintain uniform clearance around door and drawer fronts of 1/16 to 3/32 inch (1.5 to 2.4 mm).~~

C. Flush Doors: Outer and inner pans that nest into box formation, with full-height channel reinforcements at center of door. Fill doors with noncombustible, sound-deadening material.

D. Glazed Doors: Hollow-metal stiles and rails of similar construction as flush doors, with glass held in resilient channels or gasket material.

E. Hinged Doors: Mortise for hinges and reinforce with angles welded inside inner pans at hinge edge.

F. Drawers: Fronts made from outer and inner pans that nest into box formation, with no raw metal edges at top. Sides, back, and bottom fabricated in one piece with rolled or formed top of sides for stiffening and comfortable grasp for drawer removal. Provide drawers with rubber bumpers, polymer roller slides, and positive stops to prevent metal-to-metal contact or accidental removal.

G. Adjustable Shelves: Front, back, and ends formed down, with edges returned horizontally at front and back to form reinforcing channels.

H. Toe Space: Fully enclosed, 4 inches (100 mm) high by 3 inches (75 mm) deep, with no open gaps or pockets.

I. Tables: Welded tubing legs, not less than 2 inches (50 mm) square with channel stretchers as needed to comply with product standard. Weld or bolt stretchers to legs and cross-stretchers, and bolt legs to table aprons. Provide leveling device welded to bottom of each leg.

1. Leg Shoes: Satin-finished stainless steel, open-bottom, slip-on type.

J. Utilities: Provide space, cutouts, and holes for pipes, conduits, and fittings in cabinet bodies to accommodate utility services and their support-strut assemblies.

1. Provide base cabinets with removable backs for access to utility space.

K. Utility-Space Framing: Laboratory casework manufacturer's standard steel framing units consisting of 2 steel slotted channels complying with MFMA-4, not less than 1-5/8 inches (41 mm) square by 0.105-inch (2.66-mm) nominal thickness, and connected at top and bottom by U-shaped brackets made from 1-1/4-by-1/4-inch (32-by-6-mm) steel flat bars. Framing units may be made by welding specified channel material into rectangular frames instead of using U-shaped brackets.

L. Filler and Closure Panels: Provide where indicated and as needed to close spaces between cabinets and walls, ceilings, and indicated equipment. Fabricate from same material and with same finish as cabinets and with hemmed or flanged edges unless otherwise indicated.

1. Provide utility-space closure panels at spaces between base cabinets where utility space would otherwise be exposed, including spaces below countertops.
2. Provide closure panels at ends of utility spaces where utility space would otherwise be exposed.
3. Provide knee-space panels (modesty panels) at spaces between base cabinets, where cabinets are not installed against a wall or where space is not otherwise closed. Fabricate from back-to-back panels or of hollow construction to eliminate exposed hemmed or flanged edges.

~~2.7 METAL CABINET FINISH~~

~~A. General: Prepare, treat, and finish welded assemblies after assembling. Prepare, treat, and finish components that are to be assembled with mechanical fasteners before assembling. Prepare, treat, and finish concealed surfaces same as exposed surfaces.~~

~~B. Preparation: After assembly, clean surfaces of mill scale, rust, oil, and other contaminants. After cleaning, apply a conversion coating suited to the organic coating to be applied over it.~~

~~C. Chemical-Resistant Finish: Immediately after cleaning and pretreating, apply laboratory casework manufacturer's standard two-coat, chemical-resistant, baked-on finish consisting of prime coat and thermosetting topcoat. Comply with coating manufacturer's written instructions for applying and baking to achieve a minimum dry film thickness of 2 mils (0.05 mm).~~

~~1. Chemical and Physical Resistance of Finish System: Finish complies with acceptance levels of cabinet surface finish tests in SEFA 8. Acceptance level for chemical spot test shall be no more than four Level 3 conditions.~~
~~2. Colors for Metal Laboratory Casework Finish: As selected by Architect from manufacturer's full range.~~

2.8 HARDWARE

A. General: Provide laboratory casework manufacturer's standard, commercial-quality, heavy-duty hardware complying with requirements indicated for each type.

B. Hinges: Stainless-steel, 5-knuckle hinges complying with BHMA A156.9, Grade 1, with antifriction bearings and rounded tips. Provide 2 for doors 48 inches (1200 mm) high or less and 3 for doors more than 48 inches (1200 mm) high.

C. Hinged Door and Drawer Pulls: Solid aluminum, stainless steel, or chrome-plated brass back-mounted pulls. Provide 2 pulls for drawers more than 24 inches (600 mm) wide.

1. Design: Wire pulls.
2. Overall Size: 1-3/8 by 5-1/2 inches (35 by 140 mm).

D. Sliding Door Pulls: Stainless-steel or chrome-plated recessed flush pulls.

1. Design and Size: Oval, 1 by 3 inches (25 by 76 mm), 3/8 inch (10 mm) deep.

E. Pulls: Recessed aluminum pulls. Provide 2 pulls for drawers more than 24 inches (600 mm) wide.

F. Pulls for Metal Cabinets: Full-width, recessed channel pulls; integrally formed from front pan of doors and drawer fronts.

G. Door Catches: Nylon-roller spring catches. Provide 2 catches on doors more than 48 inches (1200 mm) high.

H. Drawer Slides: Side mounted, epoxy-coated steel, self-closing; designed to prevent rebound when drawers are closed; complying with BHMA A156.9, Type B05091.

1. Provide Grade 1HD-100; for drawers not more than 6 inches (150 mm) high and 24 inches (600 mm) wide.
2. Provide Grade 1HD-200; for drawers more than 6 inches (150 mm) high or 24 inches (600 mm) wide.
3. Heavy Duty (Grade 1HD-100 and Grade 1HD-200): Full-extension, ball-bearing type.

I. Label Holders: Stainless steel, aluminum, or chrome plated; sized to receive standard label cards approximately 1 by 2 inches (25 by 50 mm), attached with screws or rivets. Provide on all drawers.

J. Locks for Metal Cabinets: Cam or half-mortise type, brass with chrome-plated finish; complying with BHMA A156.11, Type E07281, E07111, or E07021.

1. Provide a minimum of two keys per lock and two master keys.
2. Provide on all drawers and doors.
3. Keying: Key locks alike within each room; key each room separately.
4. Master Key System: Key all locks to be operable by master key.

K. Sliding-Door Hardware Sets: Laboratory casework manufacturer's standard, to suit type and size of sliding-door units.

L. Adjustable Wall Shelf Supports: Surface-type steel standards and steel shelf brackets, with epoxy powder-coated finish, complying with BHMA A156.9, Types B04102 and B04112.

2.9 COUNTERTOPS AND SINKS

A. Phenolic-Composite Countertops:

1. Countertop Fabrication: Fabricate with cutouts for sinks, holes for service fittings and accessories, and with butt joints assembled with epoxy adhesive and concealed metal splines.

a. Countertop Configuration: Flat, 3/4 inch (19 mm) thick, with beveled edge and corners, and with drip groove and integral coved backsplash.
b. Countertop Configuration: As indicated.

2. Table-Top Fabrication:

a. Table-Top Configuration: Flat, 1 inch (25 mm) thick, with beveled edge and corners, and with drip groove at perimeter.

3. Shelf Configuration: Flat, 3/4 inch (19 mm) thick, with beveled edge and corners.

B. Stainless-Steel Sinks: Made from stainless-steel sheet, not less than 0.050-inch (1.27-mm) nominal thickness. Fabricate with corners rounded and coved to at least 5/8-inch (16-mm) radius. Slope sink bottoms to outlet. Provide double-wall construction for sink partitions with top edge rounded to at least 1/2-inch (13-mm) diameter. Provide continuous butt-welded joints. After fabricating and welding, grind surfaces smooth and polish as needed to produce uniform finish with no evidence of welds and free of cross scratches. Passivate and rinse surfaces; remove embedded foreign matter and leave surfaces clean.

1. Punch holes for fittings at factory.

2. Provide with stainless-steel strainers and tailpieces.
3. Provide with integral rims except where located in stainless-steel countertops.
4. Apply 1/8-inch- (3-mm-) thick coating of heat-resistant, sound-deadening mastic to undersink surfaces.

C. Cup Sinks: Material and size as indicated.

1. Provide epoxy cup sinks with polypropylene strainers and integral tailpieces.
2. Provide stainless-steel cup sinks with stainless-steel strainers and integral tailpieces.

D. Troughs: Epoxy or stainless steel, as indicated. Pitch to drains not less than 1/8 inch/foot (10 mm/m). Except where troughs empty into sinks, provide NPS 1-1/2 (DN 40) outlets with strainers and tailpieces.

1. Epoxy Troughs: Molded in 1 piece with smooth surfaces and coved corners; 3/4-inch (19-mm) minimum thickness. Provide polypropylene strainers and tailpieces.
2. Stainless-Steel Troughs: Made from stainless-steel sheet, not less than 0.062-inch (1.59-mm) nominal thickness. Fabricate with corners rounded and coved to at least 5/8-inch (16-mm) radius. Provide continuous butt-welded joints. After fabricating and welding, grind surfaces smooth and polish as needed to produce uniform finish with no evidence of welds and free of cross scratches. Passivate and rinse surfaces; remove embedded foreign matter and leave surfaces clean. Provide stainless-steel strainers and tailpieces.

2.10 WATER AND LABORATORY GAS SERVICE FITTINGS

A. Acceptable Manufacturers: Subject to compliance with requirements of Contract Documents as judged by the Architect, provide product by one of manufacturers listed. If not listed, submit as substitution according to the Conditions of the Contract and Division 01 Section "Substitution Procedures".

1. Broen A/S.
2. Chicago Faucet Company (The); a Geberit Company.
3. WaterSaver Faucet Co.

B. Service Fittings: Provide units that comply with SEFA 7, "Laboratory and Hospital Fixtures - Recommended Practices." Provide fittings complete with washers, locknuts, nipples, and other installation accessories. Include wall and deck flanges, escutcheons, handle extension rods, and similar items.

1. Provide units that comply with "Vandal-Resistant Faucets and Fixtures" recommendations in SEFA 7.

C. Materials: Fabricated from cast or forged red brass unless otherwise indicated.

1. Reagent-Grade Water Service Fittings: Polypropylene, PVC, or PVDF for parts in contact with water.

D. Finish: Chromium plated unless otherwise indicated.

1. Provide chemical-resistant powder coating in laboratory casework manufacturer's standard metallic brown, aluminum, white, or other color as approved by Architect.

2. Where indicated, provide acid- and solvent-resistant powder coating complying with requirements in SEFA 7 for corrosion-resistant finishes.

E. Water Valves and Faucets: Provide units complying with ASME A112.18.1, with renewable seats, designed for working pressure up to 80 psig (550 kPa).

1. Vacuum Breakers: Provide ASSE 1035 vacuum breakers on water fittings with serrated outlets.
2. Aerators: Provide aerators on water fittings that do not have serrated outlets.
3. Self-Closing Valves: Provide self-closing valves where indicated.

F. Ground-Key Cocks: Tapered core and handle of one-piece forged brass, ground and lapped, and held in place under constant spring pressure. Provide units designed for working pressure up to 40 psig (280 kPa), with serrated outlets.

G. Ball Valves: Chrome-plated ball and PTFE seals. Handle requires no more than 5 lbf (22 N) to operate. Provide units designed for working pressure up to 75 psig (520 kPa), with serrated outlets.

1. Where ball valves are indicated for fuel-gas use, provide locking safety handles that must be pushed in or pulled up before being turned on unless otherwise indicated].

H. Steam Valves: Stainless-steel seat and PTFE seat disc. Provide units designed for steam working pressure up to 20 psig (140 kPa), with serrated outlets.

I. Needle Valves: Provide units with renewable, self-centering, floating cones and renewable seats of stainless steel or Monel metal, with removable serrated outlets.

1. Provide units designed for working pressure as indicated on drawings.

J. Hand of Fittings: Furnish right-hand fittings unless fitting designation is followed by "L."

K. Remote-Control Valves: Provide needle valves, straight-through or angle type as indicated for fume hoods and where indicated.

L. Handles: Provide three- or four-arm, forged-brass handles for valves unless otherwise indicated.

1. Provide lever-type handles for ground-key cocks. Lever handle aligns with outlet when valve is closed and is perpendicular to outlet when valve is fully open.
2. Provide lever-type handles for ball valves unless otherwise indicated. Lever handle aligns with outlet when valve is closed and is perpendicular to outlet when valve is fully open.
3. Provide knurled, molded plastic handles for needle valves.

M. Service-Outlet Identification: Provide color-coded plastic discs with embossed identification, secured to each service-fitting handle to be tamper resistant. Comply with SEFA 7 for colors and embossed identification.

2.11 ELECTRICAL SERVICE FITTINGS

A. Service Fittings, General: Provide units complete with metal housings, receptacles, terminals, switches, pilot lights, device plates, accessories, and gaskets required for mounting on laboratory casework.

B. Receptacles: Comply with NEMA WD 1, NEMA WD 6, and UL 498. Duplex type, Configuration 5 20R.

1. Receptacle Grade: Hospital grade unless otherwise indicated.
2. Color of Receptacles: As selected by Architect unless otherwise indicated or required by NFPA 70.
3. GFCI Receptacles: Straight blade, feed-through or non-feed-through type. Comply with UL 943, Class A, Hospital grade, and include indicator light that is lighted when device is tripped.
4. TVSS (Transient Voltage Surge Suppressor) Receptacles: Comply with UL 1449, with integral TVSS in line to ground, line to neutral, and neutral to ground.

    a. TVSS Components: Multiple metal-oxide varistors; with a nominal clamp-level rating of 400 V and a minimum single transient pulse energy dissipation of 240 J, according to IEEE C62.41.2 and IEEE C62.45.
    b. Active TVSS Indication: Visual and audible, with light visible in face of device to indicate device is "active" or "no longer in service."
    c. Receptacle Type: Hospital grade, with isolated-ground terminal.
    d. Identification: Distinctive marking on face of device to denote TVSS-type unit.
    e. Color of TVSS Receptacles: Blue.

C. Switches: Comply with NEMA WD 1 and UL 20. Provide single-pole, double-pole, or 3-way switches as required; rated 120 to 277-V ac; and in amperage capacities to suit units served.

1. Color of Switches: As selected by Architect unless otherwise indicated or required by NFPA 70.
2. Provide pilot light adjacent to switch or neon-lighted handle, illuminated when switch is "ON," where noted as "PL" next to switch identification.
3. Provide key-operated switch where noted as "KEY" next to switch identification.
4. Provide thermal-overload switches, single or double pole, as required, with maximum overcurrent trip setting to suit particular motor controlled.

D. Pedestal-Type Fittings: Cast-aluminum housings with sloped single face or two faces, as indicated, with neoprene gasket under base and with concealed mounting holes in base for attaching to laboratory casework. Provide holes tapped for conduits.

E. Line-Type Fittings: Provide with cast-metal boxes with threaded holes for mounting on rigid steel conduit. Provide cover plates same size as boxes.

F. Recessed-Type Fittings: Provide with galvanized-steel boxes.

G. Finishes for Service-Fitting Components: Provide housings or boxes for pedestal- and line-type fittings with manufacturer's standard baked-on, chemical-resistant enamel in color as selected by Architect from manufacturer's full range.

H. Cover Plates: Provide satin finish, Type 304, stainless-steel cover plates with formed, beveled edges.

I. Cover-Plate Identification: Use 1/4-inch- (6-mm-) high letters unless otherwise indicated. For stainless steel or chrome-plated metal, stamp or etch plate and fill in letters with black enamel.

1. Provide at the following locations:

a. Receptacles other than standard 125-V duplex, grounding type.
b. Switches and thermal-overload switches.
c. Pilot lights when located remotely from associated equipment or switch, where function is not obvious.
d. Receptacles, switches, and other locations indicated.

2. Provide the following information:

a. Voltage and phase for receptacles other than standard 125-V duplex, grounding type.
b. Indicate equipment being controlled by switches and thermal-overload switches.
c. Indicate equipment being controlled for pilot lights when located remotely from associated equipment or switch, where function is not obvious.
d. Number of breaker in panelboard that controls device.

PART 3 - EXECUTION

3.1 EXAMINATION

A. Acceptance of Surfaces and Conditions: Examine substrates to receive products and systems and associated work for compliance with requirements and other conditions affecting performance. Proceed only when unsatisfactory conditions have been corrected in a manner complying with Contract Documents. Starting work within a particular area will be construed as acceptance of surface conditions.

3.2 INSTALLATION, GENERAL

A. Installation Quality Standards: In addition to standards listed elsewhere, perform Work according to following, unless otherwise specified:

1. Respective manufacturer/fabricator's written installation instructions.
2. Accepted submittals.
3. Contract Documents.

3.3 PREPARATION

A. General: Comply with manufacturer's instructions, recommendations, and specifications for cleaning and surface preparation. Surfaces shall have no defects, contaminants, or errors which would result in poor or potentially defective installation or would cause latent defects in Work.

3.4 INSTALLATION OF CABINETS

A. Comply with installation requirements in SEFA 2.3. Install level, plumb, and true; shim as required, using concealed shims. Where laboratory casework abuts other finished work, apply filler strips and scribe for accurate fit, with fasteners concealed where practical. Do not exceed the following tolerances:

1. Variation of Tops of Base Cabinets from Level: 1/16 inch in 10 feet (1.5 mm in 3 m).
2. Variation of Bottoms of Upper Cabinets from Level: 1/8 inch in 10 feet (3 mm in 3 m).
3. Variation of Faces of Cabinets from a True Plane: 1/8 inch in 10 feet (3 mm in 3 m).
4. Variation of Adjacent Surfaces from a True Plane (Lippage): 1/32 inch (0.8 mm).
5. Variation in Alignment of Adjacent Door and Drawer Edges: 1/16 inch (1.5 mm).

B. Utility-Space Framing: Secure to floor with two fasteners at each frame. Fasten to partition framing, wood blocking, or metal reinforcements in partitions and to base cabinets.

C. Base Cabinets: Fasten cabinets to utility-space framing, partition framing, wood blocking, or reinforcements in partitions with fasteners spaced not more than 24 inches (600 mm) o.c. Bolt adjacent cabinets together with joints flush, tight, and uniform.

1. Where base cabinets are installed away from walls, fasten to floor at toe space at not more than 24 inches (600 mm) o.c. and at sides of cabinets with not less than 2 fasteners per side.

D. Wall Cabinets: Fasten to hanging strips, masonry, partition framing, blocking, or reinforcements in partitions. Fasten each cabinet through back, near top, at not less than 24 inches (600 mm) o.c.

E. Install hardware uniformly and precisely. Set hinges snug and flat in mortises.

F. Adjust laboratory casework and hardware so doors and drawers align and operate smoothly without warp or bind and contact points meet accurately. Lubricate operating hardware as recommended by manufacturer.

3.5 INSTALLATION OF COUNTERTOPS

A. Comply with installation requirements in SEFA 2.3. Abut top and edge surfaces in one true plane with flush hairline joints and with internal supports placed to prevent deflection. Locate joints only where shown on Shop Drawings.

B. Field Jointing: Where possible, make in same manner as shop-made joints using dowels, splines, fasteners, adhesives, and sealants recommended by manufacturer. Prepare edges in shop for field-made joints.

1. Use concealed clamping devices for field-made joints in plastic-laminate countertops. Locate clamping devices within 6 inches (150 mm) of front and back edges and at intervals not exceeding 24 inches (600 mm). Tighten according to manufacturer's written instructions to exert a uniform heavy pressure at joints.

C. Fastening:

1. Secure countertops, except for epoxy countertops, to cabinets with Z-type fasteners or equivalent, using two or more fasteners at each cabinet front, end, and back.
2. Secure epoxy countertops to cabinets with epoxy cement, applied at each corner and along perimeter edges at not more than 48 inches (1200 mm) o.c.
3. Where necessary to penetrate countertops with fasteners, countersink heads approximately 1/8 inch (3 mm) and plug hole flush with material equal to countertop in chemical resistance, hardness, and appearance.

D. Provide required holes and cutouts for service fittings.

E. Seal unfinished edges and cutouts in plastic-laminate countertops with heavy coat of polyurethane varnish.

F. Provide scribe moldings for closures at junctures of countertop, curb, and splash with walls as recommended by manufacturer for materials involved. Match materials and finish to adjacent laboratory casework. Use chemical-resistant, permanently elastic sealing compound where recommended by manufacturer.

G. Carefully dress joints smooth, remove surface scratches, and clean entire surface.

3.6 INSTALLATION OF SINKS

A. Comply with installation requirements in SEFA 2.3.

B. Underside Installation of Epoxy Sinks: Use laboratory casework manufacturer's recommended adjustable support system for table- and cabinet-type installations. Set top edge of sink unit in sink and countertop manufacturers' recommended chemical-resistant sealing compound or adhesive and firmly secure to produce a tight and fully leakproof joint. Adjust sink and securely support to prevent movement. Remove excess sealant or adhesive while still wet and finish joint for neat appearance.

C. Drop-in Installation of Epoxy Sinks: Rout groove in countertop to receive sink rim if not prepared in shop. Set sink in adhesive and fill remainder of groove with sealant or adhesive. Use procedures and products recommended by sink and countertop manufacturers. Remove excess adhesive and sealant while still wet and finish joint for neat appearance.

D. Drop-in Installation of Epoxy Cup Sinks: Rout groove in countertop to receive sink rim if not prepared in shop. Set sink in adhesive and fill remainder of groove with sealant or adhesive. Use procedures and products recommended by sink and countertop manufacturers. Remove excess adhesive and sealant while still wet and finish joint for neat appearance.

3.7 INSTALLATION OF LABORATORY ACCESSORIES

A. Install accessories according to Shop Drawings, installation requirements in SEFA 2.3, and manufacturer's written instructions.

B. Securely fasten adjustable shelving supports, stainless-steel shelves, and pegboards to partition framing, wood blocking, or reinforcements in partitions.

C. Install shelf standards plumb and at heights to align shelf brackets for level shelves. Install shelving level and straight, closely fitted to other work where indicated.

D. Securely fasten pegboards to partition framing, wood blocking, or reinforcements in partitions.

3.8 INSTALLATION OF SERVICE FITTINGS

A. Comply with requirements in other Sections for installing water and laboratory gas service fittings and electrical devices.

B. Install fittings according to Shop Drawings, installation requirements in SEFA 2.3, and manufacturer's written instructions. Set bases and flanges of sink- and countertop-mounted fittings in sealant recommended by manufacturer of sink or countertop material. Securely anchor fittings to laboratory casework unless otherwise indicated.

3.9 FIELD QUALITY CONTROL

A. Manufacturer's Field Service: Manufacturer's qualified technical representative shall periodically inspect Work to ensure installation is proceeding in accordance with manufacturer's designs, recommendations, instructions, and warranty requirements. Representative shall submit written reports of each visit indicating observations, findings, and conclusions of inspection.

1. Manufacturer's Technical Representative Qualifications: Direct employee of technical services department of manufacturer with experience in providing recommendations, observations, evaluations, and problem diagnostics.

3.10 CLEANING AND PROTECTING

A. Clean finished surfaces, touch up as required, and remove or refinish damaged or soiled areas to match original factory finish, as approved by Architect.

B. Protect countertop surfaces during construction with 6-mil (0.15-mm) plastic or other suitable water-resistant covering. Tape to underside of countertop at a minimum of 48 inches (1200 mm) o.c.

END OF SECTION

SECTION 12 3571

STAINLESS STEEL CASEWORK

PART 1 - GENERAL

1.1 SUMMARY

A. Section includes stainless-steel healthcare casework and supplementary items necessary for installation for the following:

1. Stainless steel casework.
2. Stainless-steel countertops, shelves, and sinks.
3. ~~Specialty Cabinets:~~

   a. ~~Narcotics Cabinets.~~
   b. ~~Specimen Pass-Through Cabinets.~~
   c. ~~Warming Cabinets.~~
   d. ~~Desk Units.~~

1.2 ACTION SUBMITTALS

A. Product Data: Manufacturer's technical literature for each product and system indicated.

1. Include manufacturer's specifications for materials, finishes, construction details, installation instructions, and recommendations for maintenance.

B. Shop Drawings: Show details of fabrication and installation, including plans, elevations, sections, details of components and attachments to other work. Distinguish between shop and field-assembled work.

1. Indicate locations of blocking and reinforcements required for installing casework.
2. Indicate hardware locations.
3. Indicate locations of and clearances from adjacent walls, doors, windows, other building components, and equipment.
4. Include coordinated dimensions for equipment specified in other Sections.

C. Keying Schedule: Include schematic keying diagram, and index each key set to unique designations that are coordinated with the Contract Documents.

D. Samples for Verification: For each type of exposed hardware indicated, in full-size units.

1.3 INFORMATIONAL SUBMITTALS

A. Qualification Data:

1. For firms and persons specified in "Quality Assurance" to demonstrate their capabilities and experience. Include list of completed projects.

1.4 QUALITY ASSURANCE

A. Manufacturer Qualifications: Manufacturer with not less than 5 years of experience in the successful production and in-service performance of products and systems similar to scope of this Project.

B. Installer Qualifications:

1. Experience: Installer's personnel with not less than 5 years of experience in the successful performance of Work similar to scope of this Project.
2. Supervision: Installer shall maintain a competent supervisor at Project while the Work is in progress, and who has not less than 5 years of experience installing products and systems similar to scope of this Project.

1.5 PRE-INSTALLATION CONFERENCE

A. Pre-Installation Conference: Before Work begins, conduct conference at Project site.

B. Keying Conference: Conduct conference at Project site. Incorporate keying conference decisions into final keying requirements.

1.6 PROJECT CONDITIONS

A. Field Measurements: Where products and systems are indicated to fit walls and other construction, verify dimensions by field measurements before fabrication.

1.7 COORDINATION

A. Coordinate installation of products and systems with interfacing and adjoining construction to provide a successful installation without failure.

1.8 DELIVERY, STORAGE, AND HANDLING

A. Protect finished surfaces during handling and installation with protective covering of polyethylene film or other suitable material.

PART 2 - PRODUCTS

2.1 MANUFACTURERS AND PRODUCTS

A. Acceptable Manufacturers and Products: Subject to compliance with requirements of Contract Documents as judged by the Architect, provide product by one of manufacturers listed. If not listed, submit as substitution according to the Conditions of the Contract and Division 01 Section "Substitution Procedures".

~~B. Available Manufacturers and Products: Subject to compliance with requirements of Contract Documents as judged by the Architect, manufacturers offering products that may be incorporated into the Work include, but are not limited to, those listed.~~

1. Jamestown Metal Products.
2. MASS Medical Storage.
3. STERIS Corporation.

2.2 MATERIALS, GENERAL

A. Single Source Responsibility: Furnish each type of product from single manufacturer. Provide secondary materials only as recommended by manufacturer of primary materials.

2.3 CASEWORK MATERIALS

A. Stainless-Steel Sheet: ASTM A 240/A 240M, Type 304, stretcher-leveled standard of flatness.

B. Nominal Stainless-Steel Thicknesses for Stainless-Steel Healthcare Casework:

1. Sides, Ends, Fixed Backs, Bottoms, Cabinet Tops, Soffits, and Items Not Otherwise Indicated: 0.050 in (1.25). Bottoms may be 0.038 in (0.95 mm) if reinforced.
2. Back Panels, Doors, Drawer Fronts and Bodies, and Shelves: 0.038 in (0.95 mm) except 0.050 in (1.25 mm) for unreinforced shelves more than 36 in (900 mm) long.
3. Intermediate Horizontal Rails, Center Posts, Tubular Legs, and Top Gussets: 0.062 in (1.59 mm).
4. Drawer Runners and Hinge Reinforcements: 0.078 in (1.9 mm).
5. Leveling and Corner Gussets: 0.109 in (2.7 mm).

C. Glass for Glazed Doors: Clear tempered glass complying with ASTM C 1048, Kind FT, Condition A, Type I, Class 1, Quality-Q3; not less than 5.0 mm thick.

D. Clear Tempered Glass Shelves: ASTM C 1048, Kind FT, Condition A, Type I, Class 1, Quality-Q3; 6.0 mm thick; with exposed edges seamed before tempering.

E. Pegboard: Provide one or both of the following types as indicated on drawings:

1. Type 1: 1/4 in (6 mm) perforated hardboard, complying with ANSI A135.4, Class 1 tempered; with painted finish sealing faces, edges, and perimeter of holes.
2. Type 2: Perforated stainless-steel sheet, 0.050 in (1.25 mm) nominal thickness.

F. Insulation for Warming Cabinets: Semirigid, glass-fiber board insulation complying with ASTM C 612, Type IA or Type IB.

G. Electrical Components, Devices, and Accessories: Listed and labeled as defined in NFPA 70, by a qualified testing agency, and marked for intended location and application.

2.4 CABINET FABRICATION

A. General: Assemble and finish units at point of manufacture. Use precision dies for interchangeability of like-size drawers, doors, and similar parts. Perform assembly on precision jigs to provide units that are square. Reinforce units with angles, gussets, and channels. Integrally frame and weld to form a dirt- and vermin-resistant enclosure. Maintain uniform clearance around door and drawer fronts of 1/16 to 3/32 in (1.5 to 2.4 mm).

B. Metal Flush Doors: Outer and inner pans that nest into box formation, with full-height channel reinforcements at center of door. Fill doors with noncombustible, sound-deadening material.

C. Glazed Doors: Hollow-metal stiles and rails of similar construction as flush doors, with glass held in resilient channels or gasket material.

D. Hinged Doors: Mortise doors for hinges and reinforce with angles welded inside inner pans or hollow-metal stiles at hinge edge.

E. Metal Drawers: Fronts made from outer and inner pans that nest into box formation, with no raw metal edges at top. Sides, back, and bottom fabricated in one piece with rolled or formed top of sides for stiffening and comfortable grasp for drawer removal.

F. Metal Shelves: Front, back, and ends formed down, with edges returned horizontally at front and back to form reinforcing channels. Provide clips, brackets, pilasters, or other means to support shelves from cabinet ends and to allow height of shelves to be adjusted in increments of not more than 2 in (50 mm).

G. Sloping Tops: Unless tops are concealed by other construction, provide sloping tops on cabinets with tops 60 in (1500 mm) or more above the finished floor. Slope tops 25 degrees or more and construct of same material and with same finish as cabinets.

H. Toe Space: Unless casework is built-in, provide metal toe space, fully enclosed, 4 in (100 mm) high by 3 in (75 mm) deep, with no open gaps or pockets.

I. Filler Strips: Provide as needed to close spaces between cabinets and walls, ceilings, and indicated equipment. Fabricate from same material and with same finish as cabinets and with hemmed or flanged edges.

J. Trim Flanges: Formed metal trim fabricated from same material and with same finish as cabinets. Provide at perimeter of recessed cabinets.

2.5 STAINLESS-STEEL COUNTERTOPS, SHELVES, AND SINKS

A. Countertops: Fabricate from 0.062 in (1.59 mm) thick, stainless-steel sheet. Provide smooth, clean exposed tops and edges in uniform plane, free of defects. Provide front and end overhang of 1 in (25 mm) over the base cabinets.

1. Joints: Fabricate countertops without field-made joints.
2. Weld shop-made joints.
3. Sound-deaden the undersurface with heavy-build mastic coating.
4. Extend the top down to provide a 1 in (25 mm) thick edge with a 1/2 in (12 mm) return flange.
5. Form the backsplash coved to and integral with top surface, with a 1/2 in (12 mm) thick top edge and 1/2 in (12 mm) return flange.
6. Provide raised (marine) edge around perimeter of tops containing sinks; pitch tops containing sinks two ways to provide drainage without channeling or grooving.
7. Where stainless-steel sinks occur in stainless-steel tops, factory weld into one integral unit.

B. Wall-Mounted Shelves: Fabricate from stainless-steel sheet, not less than 0.050 in (1.25 mm) nominal thickness. Weld shop-made joints. Fold down or up, as indicated on drawings, the front edge a minimum of 3/4 in (19 mm); fold up the back edge a minimum of 3 in (75 mm). Provide integral stiffening brackets, formed by folding up ends a minimum of 3/4 in (19 mm) and by welding to upturned back edge.

C. Stainless-Steel Sinks: Fabricate from stainless-steel sheet, not less than 0.050 in (1.25 mm) nominal thickness. Fabricate with corners rounded and coved to at least 5/8 in (15 mm) radius. Slope the sink bottoms to outlet without channeling or grooving. Provide continuous butt-welded joints.

1. Provide sizes indicated or manufacturer's closest standard size of equal or greater volume, as approved by Architect.
2. Provide double-wall construction for sink partitions with top edge rounded to at least 1/2 in (12 mm) diameter.
3. Factory punch holes for fittings.
4. Provide sinks with stainless-steel strainers and tailpieces.
5. Provide sinks with integral rims except where located in stainless-steel countertops.
6. Apply 1/8 in (3 mm) thick coating of heat-resistant, sound-deadening mastic to undersink surfaces.

~~2.6 SPECIALTY CABINETS~~

~~A. Narcotics Cabinets: Construct of stainless steel as individual, freestanding units with finished sides and top and double-walled bottom. Provide with double-pan flush outer door and 0.062 in (1.59 mm) nominal thickness, single-pan inner door, both with locks; each is individually keyed and not master keyed.~~

~~B. Specimen Pass-Through Cabinets: Construct of stainless steel as through-wall units with double-walled construction and smooth interior. Provide with double-pan flush doors with interlocking hardware that prevents each door from being opened when the other door is open. Provide with removable, stainless-steel spill tray and trim flanges for both faces.~~

~~C. Warming Cabinets: Recessed units covered on back, top, and sides with 1 in (25 mm) thick insulation. Insulate double-pan door and equip with heat-resistant gasket. Provide with thermostatically controlled heating system to maintain temperature within 10 deg. F (-9.4 deg. C) of temperature setting that can be varied from 97 to 160 deg. F (36 to 71 deg. C).~~

~~1. Equip units with fan-forced electric heating system.~~

~~D. Desk Units: Recessed units with sloped stainless-steel writing surface, magnetic stainless-steel back panel, and built-in fluorescent light fixture.~~

~~1. Provide drawers under the writing surface as indicated.~~
~~2. Provide keyboard drawer under the writing surface and provide drawers and space for CPU under keyboard drawer as indicated. Provide rack or articulated arm, as indicated on drawings, for monitor over the writing surface.~~

2.7 STAINLESS-STEEL FINISH

A. Grind and polish surfaces to produce uniform, directional-satin finish matching No. 4 finish, with no evidence of welds and free of cross scratches. Run grain with long dimension of each piece. When polishing is completed, passivate and rinse surfaces. Remove embedded foreign matter and leave surfaces clean.

2.8 CABINET HARDWARE

A. General: Provide healthcare casework manufacturer's standard, commercial-quality, heavy-duty hardware complying with requirements indicated for each type.

B. Hinges: Stainless-steel, five-knuckle hinges complying with BHMA A156.9, Grade 1, with antifriction bearings and hospital tips. Provide two hinges for doors 48 in (1200 mm) high or less, and provide three for doors more than 48 in (1200 mm) high.

C. Continuous Hinges: Stainless-steel continuous hinges complying with BHMA A156.9, Grade 1. Provide for specialty cabinets.

D. Hinged Door and Drawer Pulls: Back-mounted pulls of stainless steel.

1. Design: As selected from manufacturer's full range.
2. Overall Size: As selected from manufacturer's full range.

E. Sliding Door Pulls: Recessed flush pulls of stainless steel or chrome plated. Provide two pulls for drawers more than 24 in (600 mm) wide.

1. Design and Size: As selected from manufacturer's full range.

F. Door Catches: Nylon-roller spring catches. Provide two catches on doors more than 48 in (1200 mm) high.

G. Drawer Slides: Side-mounted, epoxy-coated-steel, self-closing, ball-bearing drawer slides; designed to prevent rebound when drawers are closed; complying with BHMA A156.9, Type B05091.

1. Provide Grade 1 for drawers not more than 6 in (150 mm) high and 24 in (600 mm) wide.
2. Provide Grade 1HD-100 for drawers more than 6 in (150 mm) high or 24 in (600 mm) wide.
3. Provide Grade 1 for computer keyboard drawers.
4. Provide full-extension type where Grade 1 is indicated.
5. Provide full-extension type where Grade 1HD-100 or Grade 1HD-200 is indicated.

H. Locks: Cam or half-mortise type; brass with chrome-plated finish; complying with BHMA A156.11, Type E07281, E07111, or E07021.

1. Provide minimum of two keys per lock and two master keys.
2. Provide locks where indicated.
3. Keying: Key locks as directed.
4. Master Key System: Key all locks to be operable by master key.

I. Sliding-Door Hardware Sets: Healthcare casework manufacturer's standard, to suit type and size of sliding-door unit.

PART 3 - EXECUTION

A. Acceptance of Surfaces and Conditions: Examine substrates to receive products and systems and associated work for compliance with requirements and other conditions affecting performance. Proceed only when unsatisfactory conditions have been corrected in a manner complying with Contract Documents. Starting work within a particular area will be construed as acceptance of surface conditions.

3.2 INSTALLATION, GENERAL

A. Installation Quality Standards: In addition to standards listed elsewhere, perform Work according to following, unless otherwise specified:

1. Respective manufacturer written installation instructions.

2. Accepted submittals.
3. Contract Documents.

B. Control of Corrosion: Prevent galvanic action and other forms of corrosion by isolating metals and other materials from direct contact with incompatible materials.

3.3 PREPARATION

A. General: Comply with manufacturer's instructions, recommendations, and specifications for cleaning and surface preparation. Surfaces shall have no defects, contaminants, or errors which would result in poor or potentially defective installation or would cause latent defects in Work.

3.4 INSTALLATION OF CABINETS

A. Install cabinets level, plumb, and true; shim as required, using concealed shims. Where healthcare casework abuts other finished work, apply filler strips and scribe for accurate fit, with fasteners concealed where practical. Do not exceed the following tolerances:

1. Variation of Tops of Base Cabinets from Level: 1/16 in in 10 feet (1.5 mm in 3 m).
2. Variation of Bottoms of Upper Cabinets from Level: 1/8 in in 10 feet (3 mm in 3 m).
3. Variation of Faces of Cabinets from a True Plane: 1/8 in in 10 feet (3 mm in 3 m).
4. Variation of Adjacent Cabinet Surfaces from a True Plane (Lippage): 1/32 in (0.8 mm).
5. Variation in Alignment of Adjacent Door and Drawer Edges: 1/16 in (1.5 mm).

B. Recessed Cabinets: Set cabinets in openings and fasten to partition framing, wood blocking, or reinforcements in partitions with fasteners spaced not more than 24 in (600 mm) o.c. Bolt adjacent cabinets together with joints flush, tight, and uniform.

C. Base Cabinets: Fasten cabinets to partition framing, wood blocking, or reinforcements in partitions with fasteners spaced not more than 16 in (400 mm) o.c. Bolt adjacent cabinets together with joints flush, tight, and uniform.

D. Wall Cabinets: Fasten to hanging strips, masonry, partition framing, blocking, or reinforcements in partitions. Fasten each cabinet through the back, near the top, at not less than 16 in (400 mm) o.c.

E. Install hardware uniformly and precisely. Set hinges snug and flat in mortises.

F. Adjust healthcare casework and hardware so doors and drawers align and operate smoothly without warp or bind and so contact points meet accurately. Lubricate operating hardware as recommended by manufacturer.

3.5 INSTALLATION OF COUNTERTOPS

A. Install metal countertops level, plumb, and true; shim as required, using concealed shims.

B. Field Jointing: Where possible, make field jointing in the same manner as shop jointing; use fasteners recommended by manufacturer. Prepare edges to be joined in shop so Project-site processing of top and edge surfaces is not required. Locate field joints where shown on Shop Drawings.

C. Secure tops to cabinets with Z- or L-type fasteners or equivalent; use two or more fasteners at each front, end, and back.

D. Abut top and edge surfaces in one true plane, with internal supports placed to prevent deflection.

E. Seal junctures of tops, splashes, and walls with mildew-resistant silicone sealant or another permanently elastic sealing compound recommended by countertop material manufacturer.

F. Wall-Mounted Shelves: Fasten to masonry, partition framing, blocking, or reinforcements in partitions. Fasten each shelf through upturned back edge at not less than 24 in (600 mm) o.c.

3.6 FIELD QUALITY CONTROL

A. Manufacturer's Field Service: Manufacturer's qualified technical representative shall periodically inspect Work to ensure installation is proceeding in accordance with manufacturer's designs, recommendations, instructions, and warranty requirements. Representative shall submit written reports of each visit indicating observations, findings, and conclusions of inspection.

1. Manufacturer's Technical Representative Qualifications: Direct employee of technical services department of manufacturer with experience in providing recommendations, observations, evaluations, and problem diagnostics.

3.7 CLEANING AND PROTECTION

A. Repair or remove and replace defective work as directed on completion of installation.

B. Clean finished surfaces, touch up as required, and remove or refinish damaged or soiled areas to match original factory finish, as approved by Architect.

C. Protection: Provide 6 mil (0.15 mm) plastic or other suitable water-resistant covering over the countertop surfaces. Tape to underside of countertop at a minimum of 48 in (1220 mm) o.c. Remove protection at Substantial Completion.

END OF SECTION

SECTION 12 3661

SIMULATED STONE COUNTERTOPS

PART 1 - GENERAL

1.1 SUMMARY

A. Section Includes: The following simulated stone countertops along with supplementary items necessary for installation:

1. Solid surfacing countertops.
2. Quartz agglomerate countertops.
3. Cultured marble countertops.

1.2 ACTION SUBMITTALS

A. Product Data: Manufacturer's technical literature for each product and system indicated.

1. Include manufacturer's specifications for materials, finishes, construction details, installation instructions, and recommendations for maintenance.

B. Shop Drawings: Show details of fabrication and installation, including plans, sections, details of components and attachments to other work. Distinguish between shop and field-assembled work. Show locations and sizes of cutouts and holes for plumbing fixtures, accessories and other items installed in countertops.

C. Samples for Verification Purposes: For simulated stone material, 6 in (150 mm) square, showing color and pattern selected.

1.3 INFORMATIONAL SUBMITTALS

A. Warranty: Sample of warranty.

1. Provide manufacturer's written warranty covering materials and installation (labor) stating obligations, remedies, limitations and exclusions.

1.4 QUALITY ASSURANCE

A. Manufacturer Qualifications: Manufacturer with not less than 5 years of experience in the successful production and in-service performance of products and systems similar to scope of this Project.

1.5 PRE-INSTALLATION CONFERENCE

A. Pre-Installation Conference: Before Work begins, conduct conference at Project site.

1.6 PROJECT CONDITIONS

A. Environmental Limitations: Do not deliver or install countertops until building is enclosed, wet work is complete, and HVAC system is operating and maintaining temperature and relative humidity at occupancy levels during the remainder of the construction period.

B. Field Measurements: Where products and systems are indicated to fit walls and other construction, verify dimensions by field measurements before fabrication.

1.7 COORDINATION

A. Coordinate installation of products and systems with interfacing and adjoining construction to provide a successful installation without failure.

1.8 WARRANTY

A. Manufacturer's Warranty: Furnish manufacturer's written material and labor warranty signed by an authorized representative using manufacturer's standard form agreeing to furnish materials and labor required to repair or replace work which exhibits material defects caused by manufacture or design and installation of product. "Defects" is defined to include but not limited to deterioration or failure to perform as required.

1. Warranty Period: Manufacturer shall warrant the products to be free from material and labor Defects for a period of 10 years from date of Substantial Completion

PART 2 - PRODUCTS

2.1 ACCEPTABLE MANUFACTURERS

A. Acceptable Manufacturers and Products: Subject to compliance with requirements of Contract Documents as judged by the Architect, provide product by one of manufacturers listed. If not listed, submit as substitution according to the Conditions of the Contract and Division 01 Section "Substitution Procedures".

1. Solid Surfacing Paneling.

a. Avonite Surfaces
b. E. I. du Pont de Nemours and Company
c. Formica Corporation
d. LG Chemical, Ltd.
e. Meganite Inc.
f. Samsung Chemical USA, Inc.
g. Swan Corporation (The)
h. Transolid, Inc.
i. Wilsonart International

B. Basis of Design (Product Standard): Contract Documents are based on products and systems specified to establish a standard of quality. Other manufacturers offering products having equivalent characteristics may be considered, provided deviations are minor and comply with requirements of Contract Documents as judged by the Architect.

1. Color(s): As scheduled or as indicated in Interior Finish Schedule on drawings.

2.2 SIMULATED STONE COUNTERTOP MATERIALS

A. Solid Surface Material: Homogenous solid sheets of filled plastic resin complying with ANSI SS1.

B. Panel Thickness: Minimum 1/2 in (12 mm) or as indicated on drawings.

2.3 ACCESSORIES

A. Plywood: Exterior softwood plywood complying with DOC PS 1, Grade C-C Plugged, touch sanded and other requirements as specified in Division 06 Section "Miscellaneous Rough Carpentry".

B. Adhesives: Manufacturers recommended adhesive.

1. Use adhesives that comply with the following limits for VOC content when calculated according to 40 CFR 59, Subpart D (EPA Method 24):

a. Not more than 250 g/L.

C. Lavatory Bowls: Provide one or both types below, as indicated on drawings:

1. Under-slung or Self-Rimming Lavatory Bowls: Where indicated, provide as specified in Division 22 Plumbing Sections.

D. Backsplash: Preformed 4 in (100 mm) high coved backsplash, to match countertop.

E. Front Edge Trim: Preformed 1-1/2 in (38 mm), to match countertops.

F. Accessories: Provide joint seam adhesives and other items required for a complete installation as recommended in writing by simulated stone manufacturer.

G. Sealant: Mildew resistant silicone sealant as specified in Division 07 Section “Joint Sealants”.

2.4 FABRICATION OF SIMULATED STONE COUNTERTOPS

A. Accurately cut holes and drill countertop panels to receive plumbing, fixtures, soap dispensers and other accessories. Obtain field measurements prior to fabrication and maintain minimum clearance at walls.

B. Fabricate tops in one piece with shop-applied backsplashes and edges, unless otherwise indicated. Comply with simulated stone manufacturer’s written recommendations for adhesives, sealers, fabrication, and finishing.

PART 3 - EXECUTION

3.1 EXAMINATION

A. Acceptance of Surfaces and Conditions: Examine substrates to receive products and systems and associated work for compliance with requirements and other conditions affecting performance. Proceed only when unsatisfactory conditions have been corrected in a manner complying with Contract Documents. Starting work within a particular area will be construed as acceptance of surface conditions.

3.2 INSTALLATION, GENERAL

A. Installation Quality Standards: In addition to standards listed elsewhere, perform Work according to following, unless otherwise specified:

1. Respective manufacturer's written installation instructions.
2. Accepted submittals.
3. Contract Documents.

3.3 PREPARATION

A. General: Comply with manufacturer's instructions, recommendations, and specifications for cleaning and surface preparation. Surfaces shall have no defects, contaminants, or errors which would result in poor or potentially defective installation or would cause latent defects in Work.

3.4 CONSTRUCTION TOLERANCES

A. Variation from Plumb: For vertical lines and surfaces, do not exceed 1/16 in per 48 in (1.5 mm per 1200 mm).

B. Variation from Level: Do not exceed 1/8 in per 96 in (3 mm per 2400 mm), 1/4 in (6 mm) maximum.

C. Variation in Joint Width: Do not vary joint thickness more than 1/4 of nominal joint width.

D. Variation in Plane at Joints (Lipping): Do not exceed 1/64 in (0.4 mm) difference between planes of adjacent units.

E. Variation in Line of Edge at Joints (Lipping): Do not exceed 1/64 in (0.4 mm) difference between edges of adjacent units, where edge line continues across joint.

3.5 INSTALLATION OF SIMULATED STONE COUNTERTOPS

A. Install countertops over plywood sub-tops secured to sub-framing supports with full spread of silicone adhesive in accordance with manufacturer's recommendations.

B. Set countertops to comply with requirements indicated on Drawings and Shop Drawings. Shim and adjust to locations indicated, with uniform joints of widths indicated and with edges and faces aligned according to established relationships and indicated tolerances.

C. Align adjacent countertops and form seams to comply with manufacturer's written recommendations using adhesive in color to match countertop.

D. Carefully dress joints smooth, remove surface scratches, and clean entire surface.

E. Secure backsplashes to tops and walls with adhesive.

F. Caulk space between backsplash and wall with sealant specified in Division 07 Section “Joint Sealants”.

G. Prepare ends and edges of simulated stone pieces to be joined according to the manufacturer’s/fabricator's recommendations for position and angle of butted joint. Lightly sand and thoroughly clean to remove dirt and grease. Join pieces with adhesive clamped until fully cured. Buff and sand to produce a smooth uniform seamless surface.

H. Apply sealant and compress to form bond with simulated stone material and adjacent surfaces and tool sealant surface to clean, straight lines.

3.6 CLEANING

A. Promptly clean simulated stone as work progresses to minimize final cleaning. Do not leave adhesive or sealant to dry on simulated stone faces.

B. Final clean and protect installed countertops in accordance with manufacturer's instructions.

3.7 FINISH SCHEDULE

A. Color: As shown in Interior Finish Schedule on drawings.

END OF SECTION

SECTION 12 9313

BICYCLE RACKS

PART 1 - GENERAL

1.1 SUMMARY

A. Section includes bicycle racks and supplementary items necessary to complete work required for their installation.

1.2 ACTION SUBMITTALS

A. Product Data: Manufacturer's technical literature for each product and system indicated.

1. Include manufacturer's specifications for materials, finishes, construction details, installation instructions, and recommendations for maintenance.

B. Shop Drawings: Show details of fabrication and installation, including plans, elevations, sections, details of components and attachments to other work. Distinguish between shop and field-assembled work

C. Samples: Submit one 12" long tube section for each finish specified.

1.3 COORDINATION

A. Coordinate installation of products and systems with interfacing and adjoining construction to provide a successful installation without failure.

PART 2 - PRODUCTS

2.1 MANUFACTURERS AND PRODUCTS

A. Acceptable Manufacturers and Products: Subject to compliance with requirements of Contract Documents as judged by the Architect, provide product by one of manufacturers listed. If not listed, submit as substitution according to the Conditions of the Contract and Division 01 Section "Substitution Procedures".

B. Available Manufacturers and Products: Subject to compliance with requirements of Contract Documents as judged by the Architect, manufacturers offering products that may be incorporated into the Work include, but are not limited to, those listed.

1. AAA Ribbon Rack Co. - "The Original Ribbon Rack"
2. Bike Security Racks Co. - "Bike Stanchions"
3. Columbia Cascade Co. - "Original CycLoops"
4. Gametime, Inc. - "7700 Series Loop Bike Rack"
5. Madrax, Inc. - "Heavy-Duty Winder"
6. Madrax, Inc. - "Winder-Plus"

2.2 MATERIALS, GENERAL

A. Single Source Responsibility: Furnish each type of product from single manufacturer. Provide secondary materials only as recommended by manufacturer of primary materials.

2.3 MATERIAL

A. Pipe:

1. Schedule 40 steel pipe. [Schedule 40 stainless steel pipe.] [Schedule 10 steel pipe.]

2. Gage/Thickness: 0.154 inch [0.109 inch]
3. Diameter: 2.375 inch (60 mm) OD [1.625 inch (41 mm) OD]

2.4 FABRICATION

A. Stand: Minimum 35 [42] inch high serpentine type stand.

B. Finish: Hot-dipped galvanized. [Electrostatically applied powder-coat finish. Color as selected by Architect from manufacturer's standard colors.] [No. 4 satin stainless steel.]

C. Anchor Type: In-Ground. [Surface Flange Mount.]

PART 3 - EXECUTION

3.1 EXAMINATION

A. Acceptance of Surfaces and Conditions: Examine substrates to receive products and systems and associated work for compliance with requirements and other conditions affecting performance. Proceed only when unsatisfactory conditions have been corrected in a manner complying with Contract Documents. Starting work within a particular area will be construed as acceptance of surface conditions.

3.2 INSTALLATION

A. Installation Quality Standards: In addition to standards listed elsewhere, perform Work according to following, unless otherwise specified:

1. Respective manufacturer written installation instructions.
2. Accepted submittals.
3. Contract Documents.

B. Control of Corrosion: Prevent galvanic action and other forms of corrosion by isolating metals and other materials from direct contact with incompatible materials.

END OF SECTION

SECTION 13 8500

SEISMIC PROTECTION

PART 1 - GENERAL

1.1 SECTION INCLUDES

A. Seismic protection and restraints for mechanical/electrical equipment and systems.

1.2 PERFORMANCE REQUIREMENTS FOR SEISMIC RESTRAINTS

A. Criteria: Provide seismic restraints for mechanical and electrical systems, components and elements in accordance with International Building Code (IBC) 2015 and ASCE 7-10, "Minimum Design Loads for Buildings and Other Structures." Include seismic bracing, supports, and attachments.

B. Project Conditions

1. Site Class as Defined in the IBC: C

2. S_{DS}, Design Spectral Acceleration at Short Periods: 0.122.

3. S_{D1}, Design Spectral Acceleration at One Second Period: 0.092.

4. Seismic Risk Category as Defined in the IBC: III

5. Component Importance Factor Ip: determine in accordance with ASCE 7 for each component.

C. Design: Design seismic restraints in accordance with stated criteria. Design and detailed drawings shall be by a Registered Professional Engineer.

D. Exclusion: Install seismic protection of water pipes for fire protection systems as specified in Section 21 1000.

E. Exclusion: Install seismic protection of ceilings as specified in section 09 5000.

1.3 SUBMITTALS

A. Product Data: Submit details including materials, configuration and fastenings for manufactured seismic restraint devices. Submit test data approved by ICBO confirming load capacity.

B. Shop Drawings: Signed and sealed by a qualified professional engineer. Include the following:

1. Seismic-Restraint Details: Detail fabrication, arrangement, locations, spacing and attachment of seismic restraints and snubbers. Show anchorage details.

C. Design Analysis for Seismic Restraints: Submit complete calculations for seismic restraints, stamped by a Registered Professional Engineer.

D. Component Certification: When ASCE 7 requires Component Certification for any particular component, submit manufacturer's certificate of compliance indicating that the component complies with ASCE 7 requirements.

PART 2 - PRODUCTS

2.1 SEISMIC RESTRAINTS

A. Provide seismic restraints of type permitted by IBC and ASCE 7 and in accordance with the Contractor have approved design.

PART 3 - EXECUTION

3.1 SEISMIC RESTRAINT INSTALLATION

A. Install seismic restraints in accordance with IBC, ASCE 7 and Contractor's approved design.

END OF SECTION

SECTION 14 2100

ELECTRIC TRACTION ELEVATORS

PART 1 - GENERAL

1.1 SUMMARY

A. Section Includes: Pre-engineered electric traction passenger elevators and supplementary items necessary to complete their installation.

1. Designated elevator complying with code requirements for stretcher.

B. Related Requirements: Including but not limited to the following:

1. Division 05 Section "Structural Steel Framing" for the following:

a. Attachment plates, angle brackets, and other preparation of structural steel for fastening guide-rail brackets.
b. Divider beams.
c. Hoist beams.
d. Structural-steel shapes for subsills.

2. Division 05 Section "Metal Fabrications" for the following:

a. Pit ladders.

1.2 PRODUCT VARIATIONS AND ADJUSTMENTS

A. Product Variations: In the event of differences between products and systems of acceptable or available manufacturer/fabricators, Contractor shall notify Architect of such differences and resolve conflicts prior to awarding Contract. Failure of Contractor to provide notification shall be construed as acceptance of conditions indicated, and changes caused by differences between products and Contract Documents shall be included in the Work at no additional cost to Owner.

B. Adjustments: Proposed deviations shall include a detailed analysis of impact to adjacent substrates, structural, mechanical, electrical or other building systems, including related design or construction cost impacts. Deviations causing changes in materials, constructability, substrates, systems or conditions shall be included in the Work at no additional cost to Owner.

~~1.3 ALLOWANCES~~

~~A. Elevator Car Allowances: Provide finished elevator cars under the Elevator Car Allowance. Allowance includes furnishing and installing the following:~~

~~1. Car wall finishes including trim.~~
~~2. Car floor finishes.~~
~~3. Car ceiling finishes.~~
~~4. Car light fixtures.~~
~~5. Handrails.~~
~~6. Cutouts and other provisions for installing elevator signal equipment in cars.~~

BASIS OF DESIGN FINISHES

1.4 DEFINITIONS

A. Definitions in ASME A17.1/CSA B44 apply to work of this Section.

B. Service Elevator: A passenger elevator that is also used to carry freight.

C. Defective Elevator Work: Operation or control system failures; performances below specified ratings; excessive wear; unusual deterioration or aging of materials or finishes; unsafe conditions; the need for excessive maintenance; abnormal noise or vibration; and similar unusual, unexpected, and unsatisfactory conditions.

1.5 ACTION SUBMITTALS

A. Product Data: Manufacturer's technical literature for each product and system indicated.

1. Include manufacturer's specifications for materials, finishes, construction details, installation instructions, and recommendations for maintenance.
2. Include capacities, sizes, performances, operations, safety features, finishes, and similar information. Include product data for car enclosures, hoistway entrances, and operation, control, and signal systems.

B. Shop Drawings: Show details of fabrication and installation, including plans, elevations, sections, details of components and attachments to other work. Distinguish between shop and field-assembled work.

1. Include large-scale details indicating service at each landing, coordination with building structure, relationships with other construction, and locations of equipment.

a. Include machine room layout if applicable.
b. Include large-scale layout of car-control station.
c. Include standby power operation control panel if applicable.

2. Indicate maximum dynamic and static loads imposed on building structure at points of support, and maximum and average power demands.
3. Indicate variations from specified requirements.

C. Samples for Verification: For exposed car, hoistway door and frame, and signal equipment finishes; 3 inch (75 mm) square Samples of sheet materials; and 4 inch (100 mm) lengths of running trim members.

1. Signal and Fixtures: Architect shall select and approve all fixture selections.

1.6 INFORMATIONAL SUBMITTALS

A. Seismic Qualification Certificates: For elevator equipment, accessories, and components, from manufacturer.

1. Basis for Certification: Indicate whether withstand certification is based on actual test of assembled components or on calculation.
2. Dimensioned Outline Drawings of Equipment Unit: Identify center of gravity and locate and describe mounting and anchorage provisions.
3. Detailed description of equipment anchorage devices on which the certification is based and their installation requirements.

B. Manufacturer Certificates: Signed by elevator manufacturer certifying that hoistway, pit, and machine room or control closet layout and dimensions, as shown on Drawings, and electrical service including standby power generator if applicable, as shown and specified, are adequate for elevator system being provided.

C. Field Quality Control Reports: Written report of testing and inspection required by "Field Quality Control".

D. Qualification Data:

1. For firms and persons specified in "Quality Assurance" to demonstrate their capabilities and experience. Include list of completed projects.

E. Warranty: Sample of warranty.

1. Provide manufacturer's written warranty covering materials and installation (labor) stating obligations, remedies, limitations and exclusions.

1.7 CLOSEOUT SUBMITTALS

A. Operation and Maintenance Data: For elevators to include in emergency, operation, and maintenance manuals.

B. Diagnostic Test Equipment and Instructions: Provide all diagnostic test devices together with one set of all supporting information necessary for interpretation of test data and troubleshooting of system. The elevator installation shall be a design that can be maintainable by any licensed elevator maintenance company employing journeymen mechanics, without the need to purchase or lease additional diagnostic devices, special tools, or instructions from the original equipment manufacturer.

C. Inspection and Acceptance Certificates and Operating Permits: As required by authorities having jurisdiction for normal, unrestricted elevator use.

1.8 QUALITY ASSURANCE

~~A. Manufacturer Qualifications: Manufacturer with not less than 5 years of experience in the successful production and in-service performance of products and systems similar to scope of this Project.~~

B. Installer Qualifications:

1. Experience: Installer's personnel with not less than 5 years of experience in the successful performance of Work similar to scope of this Project.
2. Supervision: Installer shall maintain a competent supervisor at Project while the Work is in progress, and who has not less than 5 years of experience installing products and systems similar to scope of this Project.
3. Manufacturer Acceptance: Installer shall be certified, approved, licensed, or acceptable to manufacturer to install products.

1.9 PRE-INSTALLATION CONFERENCE

A. Pre-Installation Conference: Before Work begins, conduct conference at Project site.

1. Participants:

    a. Architect.
    b. Contractor, including superintendent.
    c. Installer, including project manager and supervisor.
    d. If requested, Manufacturer's qualified technical representative.
    e. Installers of other construction interfaced with Work.

2. Minimum Agenda: Installer shall demonstrate understanding of the Work required by describing detailed procedures for preparing, installing, and cleaning the Work. Demonstration shall include, but not be limited to, following topics:

    a. Tour representative areas of Work, inspect and discuss condition of substrate, and other preparatory work performed by other trades.
    b. Review Contract Document requirements.
    c. Review approved submittals.
    d. Review inspection and testing requirements.
    e. Review environmental conditions and procedures for coping with unfavorable conditions.
    f. Resolve deviations or differences between Contract Documents and the manufacturer's specifications.

3. Record discussions, including decisions and agreements, and prepare report.

1.10 DELIVERY, STORAGE, AND HANDLING

A. Deliver, store, and handle materials, components, and equipment in manufacturer's protective packaging. Store materials, components, and equipment off of ground, under cover, and in a dry location.

1.11 COORDINATION

A. Coordinate installation of products and systems with interfacing and adjoining construction to provide a successful installation without failure.

B. Coordinate installation of sleeves, block outs, elevator equipment with integral anchors, and other items that are embedded in concrete or masonry for elevator equipment. Furnish templates, sleeves, elevator equipment with integral anchors, and installation instructions and deliver to Project site in time for installation.

C. Coordinate locations and dimensions of other work relating to electric traction elevators including pit ladders; sumps and floor drains in pits; entrance subsills; electrical service; and electrical outlets, lights, and switches in hoistways, pits, and machine rooms.

1.12 WARRANTY

A. Manufacturer’s Warranty: Furnish manufacturer’s written material and labor warranty signed by an authorized representative using manufacturer’s standard form agreeing to furnish materials and labor required to repair or replace work which exhibits material defects caused by manufacture or design and installation of product. "Defects" is defined to include but not limited to deterioration or failure to perform as required.

1. Failures include, but are not limited to, operation or control system failure, including excessive malfunctions; performances below specified ratings; excessive wear; unusual deterioration or aging of materials or finishes; unsafe conditions; need for excessive maintenance; abnormal noise or vibration; and similar unusual, unexpected, and unsatisfactory conditions.
2. Warranty Period: Manufacturer shall warrant the products to be free from material and labor Defects for a period of 1 year from date of Substantial Completion.

1.13 MAINTENANCE SERVICE

A. Initial Maintenance Service: Beginning at Substantial Completion, provide 12 months' full maintenance service by skilled employees of the elevator Installer. Include monthly preventive maintenance, repair or replacement of worn or defective components, lubrication, cleaning, and adjusting as required for proper elevator operation at rated speed and capacity. Provide parts and supplies as used in the manufacture and installation of original equipment.

1. Service Records: Installer shall provide a report of all service calls, maintenance service and repairs made during the initial maintenance service period.
2. Perform maintenance, including emergency callback service, during normal working hours with two hour or less response time.
3. Include 24-hour-per-day, 7-day-per-week emergency callback service with one hour or less response time.

B. Continuing Maintenance Proposal: Submit a continuing maintenance proposal from Installer to Owner, in the form of a standard one-year maintenance agreement, starting on date initial maintenance service is concluded. State services, obligations, conditions, and terms for agreement period and for future renewal options.

C. Parts: Contractor guarantees to sell parts, including circuit boards, to the Owner or Owner's Agent.

PART 2 - PRODUCTS

2.1 MANUFACTURERS AND PRODUCTS

A. Acceptable Manufacturers and Products: Subject to compliance with requirements of Contract Documents as judged by the Architect, provide product by one of manufacturers listed. If not listed, submit as substitution according to the Conditions of the Contract and Division 01 Section "Substitution Procedures".

~~B. Available Manufacturers and Products: Subject to compliance with requirements of Contract Documents as judged by the Architect, manufacturers offering products that may be incorporated into the Work include, but are not limited to, those listed.~~

1. KONE Inc.
2. Otis Elevator Co.
3. Schindler Elevator Corp.
4. ThyssenKrupp Elevator.

C. Basis of Design (Product Standard): Contract Documents are based on products and systems specified to establish a standard of quality. Other manufacturers offering products having equivalent characteristics may be considered, provided deviations are minor and comply with requirements of Contract Documents as judged by the Architect.

1. Manufacturer and Product: KONE Monospace 500 - CLASSIC CHIC - 42004

2.2 MATERIALS, GENERAL

A. Source Limitations: Obtain elevators, including hydraulic passenger elevators when specified in another Section, from single manufacturer.

1. Major elevator components, including driving machines, controllers, signal fixtures, door operators, car frames, cars, and entrances, shall be manufactured by single manufacturer.

2.3 PERFORMANCE REQUIREMENTS

A. Regulatory Requirements: Comply with requirements of authorities having jurisdiction and applicable provisions of ASME A17.1/CSA B44 "Safety Code for Elevators and Escalators".

B. Accessibility Requirements: Comply with requirements of authorities having jurisdiction and Section 407 in the U.S. Architectural & Transportation Barriers Compliance Board's ADA-ABA Accessibility Guidelines and with ICC A117.1.

C. Seismic Performance: Elevator system shall withstand the effects of earthquake motions determined according to the building code and shall comply with elevator safety requirements for applicable seismic risk Zone in ASME A17.1/CSA B44.

1. The term "withstand" means "the system will remain in place without separation of any parts when subjected to the seismic forces specified and the system will be fully operational after the seismic event."

2.4 ELEVATORS

A. Elevator System, General: Manufacturer's standard elevator systems. Unless otherwise indicated, manufacturer's standard components shall be used, as included in standard elevator systems and as required for complete system.

B. Elevator Description – Passenger Elevator, No 1:

1. Machine Location:

~~a. Machine room above hoistway~~
b. Hoistway; no machine room is provided.

2. Machine Type:

a. Traction; Geared for speeds up to 450 fpm; Gearless for speeds of 500 fpm and higher.

~~3. Rated Load: 2000 lb (908 kg.~~
4. Rated Load: 2500 lb (1135 kg).

5. Rated Load: 3000 lb (1362 kg).
6. Rated Load: 3500 lb (1589 kg).
7. Rated Load: 4000 lb (1816 kg).
8. Rated Load: 4500 lb (2043 kg).
9. Rated Load: 5000 lb (2270 kg).
10. Freight Loading Class for Service Elevator(s): Class A.
11. Rated Speed: 150 fpm 200 FPM
12. Rated Speed: 350 fpm (1.8 m/s).
13. Rated Speed: 400 fpm (2.0 m/s).
14. Rated Speed: 450 fpm (2.3 m/s).
15. Rated Speed: 500 fpm (2.5 m/s).
16. Rated Speed: 700 fpm (3.6 m/s).
17. Operation System: Microprocessor operation, VVVF control.
18. Auxiliary Operations:

    a. Standby power operation.
    b. Battery-powered lowering.
    c. Earthquake Emergency Operation: Comply with requirements in ASME A17.1/CSA B44
    d. Automatic dispatching of loaded car.
    e. Nuisance call cancel.
    f. Emergency hospital service at all floors.
    g. Independent service for service elevator and all cars in group.
    h. Loaded-car bypass.
    i. Distributed parking.

19. Security Features:

    a. Card-reader operation
    b. Car-to-lobby feature.

20. Dual Car-Control Stations: Provide two car-control stations in each elevator; equip only one with required keyswitches if any.
21. Car Enclosures:

    a. As indicated on Drawings.
    b. Inside Width: Unless otherwise indicated, Manufacturer's standard for rated load; measured from side wall to side wall.
    c. Inside Depth: Unless otherwise indicated, Manufacturer's standard for rated load; measured from back wall to front wall (return panels).
    d. Inside Height: Unless otherwise indicated, 108 inches (2700 mm) measured to underside of ceiling.
    e. Front Walls (Return Panels) and Car Fixtures:

        1) Polished stainless steel, No. 8 finish
        2) Satin stainless steel, No. 4 finish
        3) Polished bronze, lacquered
        4) Satin bronze, lacquered

    f. Side and Rear Wall Panels and Reveals:

        1) Enameled steel
        2) Primed steel

SIDE WALLS: BRUSHED STAINLESS STEEL (4SS)
REAR WALL: MADAGASCAR (L416) WOOD LAMINATE

3) Plastic laminate
4) Satin stainless steel, No. 4 finish
5) Textured stainless steel
6) Satin bronze, lacquered

g. Door Faces (Interior):

1) Enameled steel
2) Primed steel
3) Polished stainless steel, No. 8 finish
4) Satin stainless steel, No. 4 finish
5) Textured stainless steel
6) Polished bronze, lacquered
7) Satin bronze, lacquered

h. Door Sills:

1) Aluminum
2) Bronze
3) Nickel silver

i. Ceiling:

1) Luminous ceiling
2) Polished stainless steel, No. 8 finish
3) Satin stainless steel, No. 4 finish
4) Polished bronze, lacquered

CEILING: BRUSHED STAINLESS STEEL (4SS) W/ ROUND LED SPOTLIGHTS (CL88)

j. Handrails: Unless otherwise indicated, at rear of car.

1) Mirror-polished stainless steel, No. 8 finish
2) Satin stainless steel, No. 4 finish
3) Mirror-polished bronze, lacquered
4) Satin bronze, lacquered

HANDRAIL: ROUND, STRAIGHT ENDS (HR61) BRUSHED STAINLESS STEEL (4SS)

k. Floor prepared to receive carpet.
l. Floor prepared to receive resilient flooring (specified in Section "Resilient Flooring").
m. Floor recessed and prepared to receive dimension stone tile or ceramic tile
n. Floor Thickness, Including Setting Materials: Verify thickness above subfloor; coordinate car door sill height with manufacturer.
o. Floor: Stainless steel checkered plate.

22 Hoistway Entrances: Refer to drawings

a. Width: Unless otherwise indicated, 42 inches (1050 mm).
b. Height: Unless otherwise indicated, 96 inches (2400 mm).
c. Type:

1) Single-speed side sliding
2) Two-speed side sliding
3) Single-speed center opening
4) Two-speed center opening.

d. Doors and Frames at First Floor:

1) Enameled steel
2) Primed steel
3) Polished stainless steel, No. 8 finish
4) Satin stainless steel, No. 4 finish
5) Polished bronze, lacquered
6) Satin bronze, lacquered
7) Textured stainless steel at doors

e. Doors and Frames at Other Floors:

1) Enameled steel
2) Primed steel
3) Polished stainless steel, No. 8 finish
4) Satin stainless steel, No. 4 finish
5) Polished bronze, lacquered
6) Satin bronze, lacquered
7) Textured stainless steel at doors

f. Sills at First Floor:

1) Aluminum, mill finish
2) Bronze, polished
3) Nickel silver, polished

g. Sills at Other Floors:

1) Aluminum, mill finish
2) Bronze, polished
3) Nickel silver, polished

23. Hall Fixtures: Refer to Drawings

a. Polished stainless steel, No. 8 finish
b. Satin stainless steel, No. 4 finish
c. Polished bronze, lacquered
d. Satin bronze, lacquered
e. Recessed type with no exposed-metal surfaces

24. Additional Requirements:

a. Provide inspection certificate in each car, mounted under acrylic cover with frame matching adjacent metal finish.
b. Provide hooks for protective pads in all cars and two complete set(s) of full-height protective pads.

C. Elevator Description – Service Elevator, No 2:

1. Machine Location:

a. Machine room above hoistway
b. Hoistway; no machine room is provided.

2. Machine Type:

    a. Traction; Geared for speeds up to 450 fpm; Gearless for speeds of 500 fpm and higher.

3. ~~Rated Load: 2000 lb (908 kg.~~
4. ~~Rated Load: 2500 lb (1135 kg).~~
5. ~~Rated Load: 3000 lb (1362 kg).~~
6. ~~Rated Load: 3500 lb (1589 kg).~~
7. ~~Rated Load: 4000 lb (1816 kg).~~
8. ~~Rated Load: 4500 lb (2043 kg).~~
9. Rated Load: ~~5000 lb (2270 kg).~~

10. ~~Freight Loading Class for Service Elevator(s): Class A.~~
11. ~~Rated Speed: 150 fpm~~ 200 FPM
12. ~~Rated Speed: 350 fpm (1.8 m/s).~~
13. ~~Rated Speed: 400 fpm (2.0 m/s).~~
14. ~~Rated Speed: 450 fpm (2.3 m/s).~~
15. ~~Rated Speed: 500 fpm (2.5 m/s).~~
16. ~~Rated Speed: 700 fpm (3.6 m/s).~~
17. Operation System: Microprocessor operation, VVVF control.
18. Auxiliary Operations:

    a. Standby power operation.
    b. ~~Battery-powered lowering.~~
    c. Earthquake Emergency Operation: Comply with requirements in ASME A17.1/CSA B44.
    d. Automatic dispatching of loaded car.
    e. Nuisance call cancel.
    f. Emergency hospital service at all floors.
    g. Independent service for service elevator and all cars in group.
    h. Loaded-car bypass.
    i. Distributed parking.

19. ~~Security Features:~~

    a. ~~Card-reader operation~~
    b. ~~Car-to-lobby feature.~~

20. Dual Car-Control Stations: Provide two car-control stations in each elevator; equip only one with required keyswitches if any.
21. Car Enclosures:

    a. As indicated on Drawings.
    b. Inside Width: Unless otherwise indicated, Manufacturer's standard for rated load; measured from side wall to side wall.
    c. Inside Depth: Unless otherwise indicated, Manufacturer's standard for rated load; measured from back wall to front wall (return panels).
    d. Inside Height: Unless otherwise indicated, 108 inches (2700 mm) measured to underside of ceiling
    e. ~~Front Walls (Return Panels) and Car Fixtures:~~

1) Polished stainless steel, No. 8 finish
2) Satin stainless steel, No. 4 finish
3) Polished bronze, lacquered
4) Satin bronze, lacquered

finishes same as the previouse finishes

f. Side and Rear Wall Panels and Reveals:

1) Enameled steel
2) Primed steel
3) Plastic laminate
4) Satin stainless steel, No. 4 finish
5) Textured stainless steel
6) Satin bronze, lacquered

g. Door Faces (Interior):

1) Enameled steel
2) Primed steel
3) Polished stainless steel, No. 8 finish
4) Satin stainless steel, No. 4 finish
5) Textured stainless steel
6) Polished bronze, lacquered
7) Satin bronze, lacquered

h. Door Sills:

1) Aluminum
2) Bronze
3) Nickel silver

i. Ceiling:

1) Luminous ceiling
2) Polished stainless steel, No. 8 finish
3) Satin stainless steel, No. 4 finish
4) Polished bronze, lacquered.

j. Handrails: Unless otherwise indicated, at rear of car.

1) Mirror-polished stainless steel, No. 8 finish
2) Satin stainless steel, No. 4 finish
3) Mirror-polished bronze, lacquered
4) Satin bronze, lacquered

k. Floor prepared to receive carpet.
l. Floor prepared to receive resilient flooring (specified in Section "Resilient Flooring").
m. Floor recessed and prepared to receive dimension stone tile or ceramic tile
n. Floor Thickness, Including Setting Materials: Verify thickness above subfloor; coordinate car door sill height with manufacturer.
o. Floor: Stainless steel checkered plate.

22. Hoistway Entrances: Refer to Drawings

a. Width: Unless otherwise indicated, 42 inches (1050 mm).
b. Height: Unless otherwise indicated, 96 inches (2400 mm).
c. Type:

1) Single-speed side sliding
2) Two-speed side sliding
3) Single-speed center opening
4) Two-speed center opening.

d. Doors and Frames at First Floor:

1) Enameled steel
2) Primed steel
3) Polished stainless steel, No. 8 finish
4) Satin stainless steel, No. 4 finish
5) Polished bronze, lacquered
6) Satin bronze, lacquered
7) Textured stainless steel at doors

e. Doors and Frames at Other Floors:

1) Enameled steel
2) Primed steel
3) Polished stainless steel, No. 8 finish
4) Satin stainless steel, No. 4 finish
5) Polished bronze, lacquered
6) Satin bronze, lacquered
7) Textured stainless steel at doors

f. Sills at First Floor:

1) Aluminum, mill finish
2) Bronze, polished
3) Nickel silver, polished

g. Sills at Other Floors:

1) Aluminum, mill finish
2) Bronze, polished
3) Nickel silver, polished

23. Hall Fixtures: Refer to Drawings

a. Polished stainless steel, No. 8 finish
b. Satin stainless steel, No. 4 finish
c. Polished bronze, lacquered
d. Satin bronze, lacquered
e. Recessed type with no exposed-metal surfaces

24. Additional Requirements:

a. Provide inspection certificate in each car, mounted under acrylic cover with frame matching adjacent metal finish.

b. Provide hooks for protective pads in all cars and two complete set(s) of full-height protective pads.

D. Elevator Description – Passenger Elevator, No. 3:

~~1. Machine Location:~~

~~a. Machine room above hoistway~~
~~b. Hoistway; no machine room is provided.~~

2. Machine Type:

a. Traction; Geared for speeds up to 450 fpm; Gearless for speeds of 500 fpm and higher.

~~3. Rated Load: 2000 lb (908 kg.~~
4. Rated Load: 2500 lb (1135 kg).
~~5. Rated Load: 3000 lb (1362 kg).~~
~~6. Rated Load: 3500 lb (1589 kg).~~
~~7. Rated Load: 4000 lb (1816 kg).~~
~~8. Rated Load: 4500 lb (2043 kg).~~
~~9. Rated Load: 5000 lb (2270 kg).~~
~~10. Freight Loading Class for Service Elevator(s): Class A.~~
11. Rated Speed 150 fpm
~~12. Rated Speed: 350 fpm (1.8 m/s).~~
~~13. Rated Speed: 400 fpm (2.0 m/s).~~
~~14. Rated Speed: 450 fpm (2.3 m/s).~~
~~15. Rated Speed: 500 fpm (2.5 m/s).~~
~~16. Rated Speed: 700 fpm (3.6 m/s).~~
17. Operation System: Microprocessor operation, VVVF control.
18. Auxiliary Operations:

a. Standby power operation.
~~b. Battery-powered lowering.~~
c. Earthquake Emergency Operation: Comply with requirements in ASME A17.1/CSA B44.
d. Automatic dispatching of loaded car.
e. Nuisance call cancel.
f. Emergency hospital service at all floors.
g. Independent service for service elevator and all cars in group.
h. Loaded-car bypass.
i. Distributed parking.

~~19. Security Features:~~

~~a. Card-reader operation~~
~~b. Car-to-lobby feature.~~

20. Dual Car-Control Stations: Provide two car-control stations in each elevator; equip only one with required keyswitches if any.
21. Car Enclosures:

a. As indicated on Drawings.
b. Inside Width: Unless otherwise indicated, Manufacturer's standard for rated load; measured from side wall to side wall.
c. Inside Depth: Unless otherwise indicated, Manufacturer's standard for rated load; measured from back wall to front wall (return panels).
d. Inside Height: Unless otherwise indicated, 108 inches (2700 mm) measured to underside of ceiling
~~e. Front Walls (Return Panels) and Car Fixtures:~~

~~1) Polished stainless steel, No. 8 finish~~
~~2) Satin stainless steel, No. 4 finish~~
~~3) Polished bronze, lacquered~~
~~4) Satin bronze, lacquered~~

~~f. Side and Rear Wall Panels and Reveals:~~

~~1) Enameled steel~~
~~2) Primed steel~~
~~3) Plastic laminate~~
~~4) Satin stainless steel, No. 4 finish~~
~~5) Textured stainless steel~~
~~6) Satin bronze, lacquered.~~

~~g. Door Faces (Interior):~~

~~1) Enameled steel~~
~~2) Primed steel~~
~~3) Polished stainless steel, No. 8 finish~~
~~4) Satin stainless steel, No. 4 finish~~
~~5) Textured stainless steel~~
~~6) Polished bronze, lacquered~~
~~7) Satin bronze, lacquered~~

h. Door Sills:

~~1) Aluminum~~
~~2) Bronze~~
3) Nickel silver

~~i. Ceiling:~~

~~1) Luminous ceiling~~
~~2) Polished stainless steel, No. 8 finish~~
~~3) Satin stainless steel, No. 4 finish~~
~~4) Polished bronze, lacquered.~~

~~j. Handrails: Unless otherwise indicated, at rear of car.~~

~~1) Mirror-polished stainless steel, No. 8 finish~~
~~2) Satin stainless steel, No. 4 finish~~
~~3) Mirror-polished bronze, lacquered~~
~~4) Satin bronze, lacquered~~

k. Floor prepared to receive carpet.
l. Floor prepared to receive resilient flooring (specified in Section "Resilient Flooring").
m. Floor recessed and prepared to receive dimension stone tile or ceramic tile
n. Floor Thickness, Including Setting Materials: Verify thickness above subfloor; coordinate car door sill height with manufacturer.
o. Floor: Stainless steel checkered plate.

22. Hoistway Entrances: As indicated on Drawings

a. Width: Unless otherwise indicated, 42 inches (1050 mm).
b. Height: Unless otherwise indicated, 96 inches (2400 mm).
c. Type:

1) Single-speed side sliding
2) Two-speed side sliding
3) Single-speed center opening
4) Two-speed center opening.

d. Doors and Frames at First Floor:

1) Enameled steel
2) Primed steel
3) Polished stainless steel, No. 8 finish
4) Satin stainless steel, No. 4 finish
5) Polished bronze, lacquered
6) Satin bronze, lacquered
7) Textured stainless steel at doors

e. Doors and Frames at Other Floors:

1) Enameled steel
2) Primed steel
3) Polished stainless steel, No. 8 finish
4) Satin stainless steel, No. 4 finish
5) Polished bronze, lacquered
6) Satin bronze, lacquered
7) Textured stainless steel at doors

f. Sills at First Floor:

1) Aluminum, mill finish
2) Bronze, polished
3) Nickel silver, polished

g. Sills at Other Floors:

1) Aluminum, mill finish
2) Bronze, polished
3) Nickel silver, polished

23. Hall Fixtures: Refer to Drawings

a. ~~Polished stainless steel, No. 8 finish~~
b. ~~Satin stainless steel, No. 4 finish~~
c. ~~Polished bronze, lacquered~~
d. ~~Satin bronze, lacquered~~
e. ~~Recessed type with no exposed-metal surfaces~~

24. Additional Requirements:

a. Provide inspection certificate in each car, mounted under acrylic cover with frame matching adjacent metal finish.
b. Provide hooks for protective pads in all cars and two complete set(s) of full-height protective pads.

2.5 TRACTION SYSTEMS

A. Elevator Machines: Variable-voltage, variable-frequency, ac-type hoisting machines and solid-state power converters.

1. Provide non-regenerative system.
2. ~~Provide regenerative system.~~

a. ~~Limit total harmonic distortion of regenerated power to 5 percent per IEEE 519.~~
b. ~~Provide means for absorbing regenerated power when elevator system is operating on standby power.~~
c. ~~Provide line filters or chokes to prevent electrical peaks or spikes from feeding back into building power system.~~

B. Fluid for Hydraulic Buffers: If using hydraulic buffers, use only fire-resistant fluid.

C. Inserts: Furnish required concrete and masonry inserts and similar anchorage devices for installing guide rails, machinery, and other components of elevator work. Device installation is specified in another Section.

D. Machine Beams: Provide framing as indicated in Drawings to support elevator hoisting machine and deflector sheaves from the building structure. Comply with Division 05 Section "Structural Steel Framing" for materials and fabrication.

E. Hoist Beams: Provide framing as indicated in Drawings to support elevator installation. Comply with Division 05 Section "Structural Steel Framing" for materials and fabrication.

F. Car Frame and Platform: Welded-steel units.

G. Guides: Provide guides at top and bottom of car and counterweight frames.

H. Guide Rails: Provide guide rails of structural capacity required to span between available structural supports without additional secondary steel, unless indicated otherwise on Drawings.

2.6 OPERATION SYSTEMS

A. General: Provide manufacturer's standard microprocessor operation systems as required to provide type of operation indicated.

B. Group Automatic Operation with Demand-Based Dispatching for Groups of Three or More Cars: Provide reprogrammable group automatic system that assigns cars to hall calls based on a dispatching program designed to minimize passenger waiting time and time to destination. System automatically adjusts to demand changes for different traffic conditions including heavy incoming, heavy two-way, heavy outgoing, and light off-hours as variations of normal two-way traffic.

1. Products: Subject to compliance with requirements, provide one of the following:

   a. KONE Inc.; KCM 831.
   b. Otis Elevator Co.; Elevonic.
   c. Schindler Elevator Corp.; Miconic TX.
   d. ThyssenKrupp Elevator, Traflomatic.

C. Auxiliary Operations: In addition to primary operation system features, provide the following operational features for elevators where indicated:

1. Standby Power Operation: On activation of standby power, cars are returned to a designated floor and parked with doors open. One car is returned at a time, with priority given to loaded cars. If a car cannot be returned, it is removed from the system. When all cars have been returned or removed from the system, one car is automatically placed in service. If car selected for service cannot operate within a predetermined time, the system removes car from service and places another car in service. Cars can be manually put in service on standby power, either for return operation or for regular operation, by switches in control panel located at main lobby or fire command station as indicated. Manual operation causes automatic operation to cease.
2. ~~Battery-Powered Lowering: If power fails, cars that are at a floor remain at that floor, open their doors, and shut down. Cars that are between floors are lowered one at a time to the next floor below, open their doors, and shut down. System includes rechargeable battery and automatic recharging system.~~
3. Automatic Dispatching of Loaded Car: When car load exceeds 80 percent of rated capacity, doors begin closing.
4. Nuisance Call Cancel: When car calls exceed a preset number while car load is less than a predetermined weight, all car calls are canceled. Preset number of calls and predetermined weight can be adjusted.
5. Loaded-Car Bypass: When car load exceeds 80 percent of rated capacity, car responds only to car calls, not to hall calls.
6. Distributed Parking: When cars are not required for response to calls, they are parked with doors closed and distributed in predetermined zones throughout the building. One zone shall include the main floor and adjacent floors; remaining floors shall be divided into approximately equal zones.
7. Independent Service: Keyswitch in car-control station removes car from group operation and allows it to respond only to car calls. Key cannot be removed from keyswitch when car is in independent service. When in independent service, doors close only in response to door close button.
8. Emergency Hospital Service: Service is initiated by card reader at designated floors. One elevator is removed from group operation and directed to the floor where service was initiated. On arriving at the floor, elevator opens its doors and parks. Car is placed in operation by selecting a floor and pressing door close button. After responding to floor selected, car is returned to group operation. If car is not placed in operation within a preset time after being called, it is returned to group operation.

9. Special Emergency Control – Firefighter's Service: Provide Phase I and Phase II Firefighters' Service; comply with requirements of authorities having jurisdiction and applicable provisions of ASME A17.1/CSA B44 "Safety Code for Elevators and Escalators".

    a. Firefighters Emergency Operation – Phase I Emergency Recall: The activation of a key switch at the designated level hall station shall express return all cars in the group to the designated floor and by-pass all car and hall calls. The cars shall park at the designated floor with the doors open and will not respond to car or hall calls unless the Phase II switch in the car is activated.
    b. Firefighters Emergency Operation - Phase II: In-car key switch control of each elevator during the Emergency operation.

D. Security Features: Provide the following security features, where indicated. Security features shall not affect emergency firefighters' service.

1. Card-Reader Operation: System uses card readers at car-control stations to authorize calls. Security system determines which landings and at what times calls require authorization by card reader. Provide required conductors in traveling cable and panel in machine room for interconnecting card readers, other security access system equipment, and elevator controllers. Allow space as indicated for card reader in car.

    a. Coordinate requirements with Security access system equipment specified in "Access Control" unless otherwise indicated.

2. Car-to-Lobby Feature: Feature, activated by keyswitch at main lobby, that causes car or all cars in a group to return immediately to lobby and open doors for inspection. On deactivation by keyswitch, calls registered before keyswitch activation are completed and normal operation is resumed.

E. Electrical Wiring:

1. Furnish and install complete insulated wiring to connect all parts of the equipment. Properly ground all components as required by National Electric Code.
2. Provide 15% spare wires between each controller, selector, hoistway junction box, and control panel; also provide 15% spare conductors in each trail cable; all spares shall be properly tagged or otherwise identified with clear and indelible markings.
3. Provide a total of twelve (12) shielded pairs for communication and security use in the traveling cables for each elevator. The shielded pairs shall be located in a cable which is not used to carry alternating current circuits. The shielded wiring shall extend to a junction box in the elevator controllers in machine room.

2.7 DOOR REOPENING DEVICES

A. Infrared Array: Provide door reopening device with uniform array of 36 or more microprocessor-controlled, infrared light beams projecting across car entrance. Interruption of one or more light beams shall cause doors to stop and reopen.

B. Nudging Feature: After car doors are prevented from closing for predetermined adjustable time, through activating door reopening device, a loud buzzer shall sound and doors shall begin to close at reduced kinetic energy.

2.8 CAR ENCLOSURES

A. General: Provide enameled-steel car enclosures to receive removable wall panels, with removable car roof, access doors, power door operators, and ventilation.

1. Provide standard railings complying with ASME A17.1/CSA B44 on car tops where required by ASME A17.1/CSA B44.
2. Elevator Car Allowance: Provide items not included in the Elevator Car Allowance as needed for finished car.

    a. Car platform sling, shell, canopy, door, door frame and return panel, shall not be included as a part of this allowance.

B. Materials and Finishes: Manufacturer's standards, but not less than the following:

1. Subfloor for Carpet or Resilient Flooring: Exterior, underlayment grade plywood, not less than 5/8 inch (15 mm) nominal thickness.
2. Subfloor for Tile or Stone: Exterior, C-C Plugged grade plywood, not less than 7/8 inch (21 mm) nominal thickness.
3. Floor Finish: As scheduled, or as indicated in "Design Selections"; match sample accepted by Architect.
4. ~~Enameled-Steel Wall Panels: Flush, hollow-metal construction; fabricated from cold-rolled steel sheet. Provide with factory-applied enamel finish; colors as selected by Architect from manufacturer's full range.~~
5. ~~Stainless-Steel Wall Panels: Flush, hollow-metal construction; fabricated from stainless-steel sheet.~~
6. ~~Bronze Wall Panels: Flush, hollow-metal construction; fabricated from bronze sheet.~~
7. ~~Plastic-Laminate Wall Panels: Plastic laminate adhesively applied to 1/2 inch (12 mm) fire-retardant-treated particleboard or manufacturer's standard honeycomb core with plastic-laminate panel backing and manufacturer's standard protective edge trim. Panels have a flame-spread index of 25 or less, when tested according to ASTM E 84. Plastic-laminate color, texture, and pattern as selected by Architect from plastic-laminate manufacturer's full range.~~
8. Fabricate car with recesses and cutouts for signal equipment.
9. Fabricate car door frame integrally with front wall of car.
10. ~~Enameled-Steel Doors: Flush, hollow-metal construction; fabricated from cold-rolled steel sheet. Provide with factory-applied enamel finish; colors as selected by Architect from manufacturer's full range.~~
11. ~~Primed-Steel Doors: Flush, hollow-metal construction; fabricated from cold-rolled steel sheet, with factory-applied, rust-resistant primer for field painting.~~
12. ~~Stainless-Steel Doors: Flush, hollow-metal construction; fabricated from stainless-steel sheet or by laminating stainless-steel sheet to exposed faces and edges of enameled cold-rolled steel doors using adhesive that fully bonds metal to metal without telegraphing or oil-canning.~~
13. ~~Bronze Doors: Flush, hollow-metal construction; fabricated by laminating bronze sheet to exposed faces and edges of enameled cold-rolled steel doors using adhesive that fully bonds metal to metal without telegraphing or oil-canning.~~
14. Sight Guards: Provide sight guards on car doors.
15. Sills: Extruded metal, with grooved surface, 1/4 inch (6 mm) thick.
16. ~~Luminous Ceiling: Fluorescent light fixtures and ceiling panels of translucent acrylic or other permanent rigid plastic.~~
17. ~~Metal Ceiling: Flush panels, with LED downlights in the center of each panel. Align ceiling panel joints with joints between wall panels.~~

18. Handrails: Manufacturer's standard handrails, of shape, metal, and finish indicated.
19. Emergency Exits: Provide emergency exits sized and located in each car in accordance with the Elevator Code.

2.9 HOISTWAY ENTRANCES

A. Hoistway Entrance Assemblies: Manufacturer's standard horizontal-sliding, door-and-frame hoistway entrances complete with track systems, hardware, sills, and accessories. Frame size and profile shall accommodate hoistway wall construction.

1. Where gypsum board wall construction is indicated, frames shall be self-supporting with reinforced head sections.

B. Fire-Rated Hoistway Entrance Assemblies: Door and frame assemblies shall comply with NFPA 80 and be listed and labeled by a testing and inspecting agency acceptable to authorities having jurisdiction.

1. Fire-Protection Rating: 1-1/2 hours.

C. Materials and Fabrication: Manufacturer's standards, but not less than the following:

1. Frames: Not less than 14 gauge.
2. Doors: Not less than 16 gauge.
3. ~~Enameled-Steel Frames: Formed from cold- or hot-rolled steel sheet. Provide with factory-applied enamel finish; colors as selected by Architect from manufacturer's full range.~~
4. ~~Primed-Steel Frames: Formed from cold- or hot-rolled steel sheet. Provide with factory-applied, rust-resistant primer for field painting.~~
5. Stainless-Steel Frames: Formed from stainless-steel sheet.
6. ~~Bronze Frames: Formed from cold- or hot-rolled steel sheet, with enamel finish, and with formed-bronze sheet laminated to steel frames using adhesive that fully bonds metal to metal without telegraphing or oil-canning.~~
7. Star of Life Symbol: Identify emergency elevators with star of life symbol, not less than 3 inches (75 mm) high, on both inside surfaces of hoistway door frames.
8. Entrance Jamb Plates: Cast metal plates complying with Elevator Code and Accessibility requirements.
9. ~~Enameled-Steel Doors and Transoms: Flush, hollow-metal construction; fabricated from cold-rolled steel sheet. Provide with factory-applied enamel finish; colors as selected by Architect from manufacturer's full range.~~
10. ~~Primed-Steel Doors and Transoms: Flush, hollow-metal construction; fabricated from cold-rolled steel sheet. Provide with factory-applied, rust-resistant primer for field painting.~~
11. Stainless-Steel Doors and Transoms: Flush, hollow-metal construction; fabricated from stainless-steel sheet or by laminating stainless-steel sheet to exposed faces and edges of enameled cold-rolled steel doors using adhesive that fully bonds metal to metal without telegraphing or oil-canning.
12. ~~Bronze Doors and Transoms: Flush, hollow-metal construction; fabricated by laminating bronze sheet to exposed faces and edges of enameled cold-rolled steel doors using adhesive that fully bonds metal to metal without telegraphing or oil-canning.~~
13. Sight Guards: Provide sight guards on doors matching door edges.
14. Sills: Extruded metal, with grooved surface, 1/4 inch (6 mm) thick.
15. Nonshrink, Nonmetallic Grout: Factory-packaged, nonstaining, noncorrosive, nongaseous grout complying with ASTM C 1107/C 1107M.

D. Architecturally Exposed Hoistways: For hoistway equipment exposed to public view, provide finishes as selected by Architect.

2.10 SIGNAL EQUIPMENT

A. General: Provide hall-call and car-call buttons that light when activated and remain lit until call has been fulfilled. Fabricate lighted elements with long-life lamps and acrylic or other permanent, non-yellowing translucent plastic diffusers or LEDs.

B. Swing-Return Car-Control Stations: Provide car-control stations mounted on hinged return panel adjacent to car door and with buttons, switches, controls, and indicator lights projecting through return panel but substantially flush with face of return panel.

1. Unless indicated otherwise, include manufacturer's premium fixture selection and provide full width swing front return and car operating panels. Logos or manufacturer's name are not permitted on exposed surfaces.
2. Mark buttons and switches for function. Use both tactile symbols and Braille.
3. Provide "No Smoking" sign matching car-control station, either integral with car-control station or mounted adjacent to it, with text and graphics as required by authorities having jurisdiction.
4. Mount controls at heights complying with the U.S. Architectural & Transportation Barriers Compliance Board's "Americans with Disabilities Act (ADA), Accessibility Guidelines (ADAAG)."
5. Provide two car control stations in each passenger elevator; equip only one with required keyswitches.
6. Provide two car control stations in each elevator with front and rear doors; locating one station at each door; equip only one with required keyswitches.

C. Emergency Communication System: Two-way voice communication system, with visible signal, which dials preprogrammed number of monitoring station and does not require handset use. System is contained in flush-mounted cabinet, with identification, instructions for use, and battery backup power supply.

D. Firefighters' Two-Way Telephone Communication Service: If required by authorities having jurisdiction, provide flush-mounted cabinet or telephone jack in each car and required conductors in traveling cable for firefighters' two-way telephone communication service specified in Division 28 "Fire-Alarm System."

E. Car Position Indicator: Provide illuminated, digital-type car position indicator, located above car-control station. Also, provide audible signal to indicate to passengers that car is either stopping at or passing each of the floors served. Include travel direction arrows if not provided in car-control station.

F. Hall Push-Button Stations: Provide one hall push-button station at each landing for each single elevator or group of elevators, but not less than two stations for each three elevators in a group.

1. Provide units with flat faceplate for mounting with body of unit recessed in wall.
2. Equip units with buttons for calling elevator and for indicating desired direction of travel.
3. Provide Firefighters Emergency Service – Phase I key switch in designated hall station.
4. If required by authorities having jurisdiction, provide telephone jack in each unit for firefighters' two-way telephone communication service.

G. Hall Lanterns: Units with illuminated arrows; but provide single arrow at terminal landings. Provide one of the following:

1. Manufacturer's standard wall-mounted units, for mounting above entrance frames.
2. Units with flat faceplate for mounting with body of unit recessed in wall and with illuminated elements projecting from faceplate for ease of angular viewing.

H. Hall Annunciator: With each hall lantern, provide audible signals indicating car arrival and direction of travel. Signals sound once for up and twice for down.

1. At manufacturer's option, audible signals may be placed on cars.

I. Hall Position Indicators: Provide illuminated, digital-display-type position indicators, located above hoistway entrances at ground floor. Provide units with flat faceplate for mounting and with body of unit recessed in wall.

J. Fire-Command-Center Annunciator Panel: Provide panel containing illuminated position indicators for each elevator, clearly labeled with elevator designation; include illuminated signal that indicates when elevator is operational and when it is at the designated emergency return level with doors open. Provide standby power elevator selector switch(es), as required by ASME A17.1/CSA B44, adjacent to position indicators. Provide illuminated signal that indicates when normal power supply has failed.

K. Emergency Pictorial Signs: Unless otherwise indicated, Fabricate from materials matching hall push-button stations, with text and graphics as required by authorities having jurisdiction, indicating that in case of fire, elevators are out of service and exits should be used instead. Provide one sign at each hall push-button station unless otherwise indicated.

2.11 FINISH MATERIALS

A. General: Provide the following materials for exposed parts of elevator car enclosures, car doors, hoistway entrance doors and frames, and signal equipment as indicated.

1. Car Shell: Not less than 14 gauge.
2. Car Canopy: Not less than 12 gauge.

B. Cold-Rolled Steel Sheet: ASTM A 1008/A 1008M, commercial steel, Type B, exposed, matte finish.

C. Hot-Rolled Steel Sheet: ASTM A 1011/A 1011M, commercial steel, Type B, pickled.

D. Stainless-Steel Sheet: ASTM A 240/A 240M, Type 304.

~~E. Textured Stainless-Steel Sheet: ASTM A 240/A 240M, Type 304 with embossed texture rolled into exposed surface.~~

~~1. Basis of Design: <Insert Manufacturer and Product>~~

~~a. Surface Finish After Texturing: <Insert Finish>~~

F. Stainless-Steel Bars: ASTM A 276, Type 304.

G. Stainless-Steel Tubing: ASTM A 554, Grade MT 304.

~~H. Bronze Plate and Sheet: ASTM B 36/B 36M, Alloy UNS No. C28000 (muntz metal).~~

I. ~~Bronze Extrusions: ASTM B 455, Alloy UNS No. C38500 (architectural bronze).~~

J. ~~Bronze Tubing: ASTM B 135 (ASTM B 135M), Alloy UNS No. C23000 (red brass, 85 percent copper).~~

K. Aluminum Extrusions: ASTM B 221 (ASTM B 221M), Alloy 6063.

L. Nickel Silver Extrusions: ASTM B 151/B 151M, Alloy UNS No. C74500 or No. C77600.

M. Plastic Laminate: High-pressure type complying with NEMA LD 3, Type HGS for flat applications, Type HGP for post-formed applications and Type BKV for panel backing.

PART 3 - EXECUTION

3.1 EXAMINATION

A. Acceptance of Surfaces and Conditions: Examine substrates and areas to receive products and systems and associated work for compliance with requirements and other conditions affecting performance. Proceed only when unsatisfactory conditions have been corrected in a manner complying with Contract Documents. Starting work within a particular area will be construed as acceptance of surface conditions.

B. Examine hoistways, hoistway openings, pits, and machine rooms as constructed; verify critical dimensions; and examine supporting structure and other conditions under which elevator work is to be installed.

C. Prepare written report, endorsed by Installer, listing conditions detrimental to performance of the Work.

3.2 INSTALLATION

A. Installation Quality Standards: In addition to standards listed elsewhere, perform Work according to following, unless otherwise specified:

1. Respective manufacturer's written installation instructions.
2. Accepted submittals.
3. Contract Documents.

B. Welded Construction: Provide welded connections for installing elevator work where bolted connections are not required for subsequent removal or for normal operation, adjustment, inspection, maintenance, and replacement of worn parts. Comply with AWS standards for workmanship and for qualifications of welding operators.

C. Sound Isolation: Mount rotating and vibrating equipment on vibration-isolating mounts to minimize vibration transmission to structure and structure-borne noise due to elevator system.

D. Lubricate operating parts of systems, including ropes, as recommended by manufacturers.

E. Alignment: Coordinate installation of hoistway entrances with installation of elevator guide rails for accurate alignment of entrances with car. Where possible, delay final adjustment of sills and doors until car is operable in shaft. Reduce clearances to minimum, safe, workable dimension at each landing.

F. Leveling Tolerance: 1/8 inch (3 mm), up or down, regardless of load and travel direction.

G. Set sills flush with finished floor surface at landing. Fill space under sill solidly with nonshrink, nonmetallic grout.

H. Locate hall signal equipment for elevators as follows unless otherwise indicated:

1. For groups of elevators, locate hall push-button stations between two elevators at center of group or at location most convenient for approaching passengers.
2. Place hall lanterns either above or beside each hoistway entrance, unless otherwise indicated.
3. Mount hall lanterns at a minimum of 72 inches (1800 mm) above finished floor.

3.3 FIELD QUALITY CONTROL

A. Manufacturer/Fabricator's Field Service: Manufacturer/fabricator's qualified technical representative shall periodically inspect Work to ensure installation is proceeding in accordance with manufacturer/fabricator's designs, recommendations, instructions, and warranty requirements. Representative shall submit written reports of each visit indicating observations, findings, and conclusions of inspection.

1. Manufacturer's Technical Representative Qualifications: Direct employee of technical services department of manufacturer with experience in providing recommendations, observations, evaluations, and problem diagnostics.

B. Acceptance Testing: On completion of elevator installation and before permitting elevator use (either temporary or permanent), perform acceptance tests as required and recommended by ASME A17.1/CSA B44 and by governing regulations and agencies.

C. Operating Test: Load elevator to rated capacity and operate continuously for 30 minutes over full travel distance, stopping at each level and proceeding immediately to the next. Record temperature rise of elevator machine during 30-minute test period. Record failure to perform as required.

1. Provide operating test on one elevator of each type, capacity, speed, and travel distance.
2. Damage to car or adjoining structure caused by performance testing shall be repaired or replaced at no cost to Owner.

D. Advise Owner, Architect, and authorities having jurisdiction in advance of dates and times that tests are to be performed on elevators.

3.4 PROTECTION

A. Temporary Use: Temporary use of elevators for construction purposes is not allowed unless authorized by Owner. Comply with the following requirements for each elevator used for construction purposes:

1. Provide car with temporary enclosure, either within finished car or in place of finished car, to protect finishes from damage.
2. Provide strippable protective film on entrance and car doors and frames.
3. Provide padded wood bumpers on entrance door frames covering jambs and frame faces.

4. Provide other protective coverings, barriers, devices, signs, and procedures as needed to protect elevator and elevator equipment.
5. Do not load elevators beyond their rated weight capacity.
6. Engage elevator Installer to provide full maintenance service. Include preventive maintenance, repair or replacement of worn or defective components, lubrication, cleanup, and adjustment as necessary for proper elevator operation at rated speed and capacity. Provide parts and supplies same as those used in the manufacture and installation of original equipment.
7. Engage elevator Installer to restore damaged work, if any, so no evidence remains of correction. Return items that cannot be refinished in the field to the shop, make required repairs and refinish entire unit, or provide new units as required.

    a. Restore elevator sill(s) to new condition or replace with new sill(s).

3.5 DEMONSTRATION

A. Engage a factory-authorized service representative to train Owner's maintenance personnel to operate, adjust, and maintain elevator(s).

1. Review emergency provisions, including emergency access and procedures to be followed at time of operational failure and other building emergencies. Train Owner's personnel in procedures to follow in identifying sources of operational failures or malfunctions. Confer with Owner on requirements for a complete elevator maintenance program.

B. Check operation of each elevator with Owner's personnel present before date of Substantial Completion. Determine that operation systems and devices are functioning properly.

END OF SECTION

SECTION 21 0517

SLEEVES AND SLEEVE SEALS FOR FIRE-SUPPRESSION PIPING

PART 1 - GENERAL

1.1 RELATED DOCUMENTS

A. Drawings and general provisions of the Contract, including General and Supplementary Conditions and Division 01 Specification Sections, apply to this Section.

1.2 SUMMARY

A. Section Includes:

1. Sleeves.
2. Stack-sleeve fittings.
3. Sleeve-seal systems.
4. Sleeve-seal fittings.
5. Grout.

1.3 ACTION SUBMITTALS

A. Product Data: For each type of product indicated.

PART 2 - PRODUCTS

2.1 SLEEVES

A. Cast-Iron Wall Pipes: Cast or fabricated of cast or ductile iron and equivalent to ductile-iron pressure pipe, with plain ends and integral waterstop unless otherwise indicated.

B. Galvanized-Steel Wall Pipes: ASTM A 53/A 53M, Schedule 40, with plain ends and welded steel collar; zinc coated.

C. Galvanized-Steel-Pipe Sleeves: ASTM A 53/A 53M, Type E, Grade B, Schedule 40, zinc coated, with plain ends.

D. Galvanized-Steel-Sheet Sleeves: 0.0239-inch minimum thickness; round tube closed with welded longitudinal joint.

E. Molded-PE or -PP Sleeves: Removable, tapered-cup shaped, and smooth outer surface with nailing flange for attaching to wooden forms.

2.2 STACK-SLEEVE FITTINGS

A. Manufacturers:
   1. Jay R. Smith Mfg. Co.
   2. Zurn Industries, LLC
   3. (Owner Selection)

B. Description: Manufactured, cast-iron sleeve with integral clamping flange. Include clamping ring, bolts, and nuts for membrane flashing.

   1. Underdeck Clamp: Clamping ring with setscrews.

2.3 SLEEVE-SEAL SYSTEMS

A. Manufacturers:
   1. Advanced Products and Systems, Inc.
   2. CALPICO, Inc.
   3. Metraflex Company
   4. (Owner Selection)

B. Description: Modular sealing-element unit, designed for field assembly, for filling annular space between piping and sleeve.

   1. Sealing Elements: NBR interlocking links shaped to fit surface of pipe. Include type and number required for pipe material and size of pipe.
   2. Pressure Plates: Carbon steel.
   3. Connecting Bolts and Nuts: Carbon steel, with corrosion-resistant coating of length required to secure pressure plates to sealing elements.

2.4 SLEEVE-SEAL FITTINGS

A. Manufacturers:
   1. Advanced Products and Systems, Inc.
   2. CALPICO, Inc.
   3. Metraflex Company
   4. (Owner Selection)

B. Description: Manufactured plastic, sleeve-type, waterstop assembly made for imbedding in concrete slab or wall. Unit has plastic or rubber waterstop collar with center opening to match piping OD.

2.5 GROUT

A. Standard: ASTM C 1107/C 1107M, Grade B, post-hardening and volume-adjusting, dry, hydraulic-cement grout.

B. Characteristics: Nonshrink; recommended for interior and exterior applications.

C. Design Mix: 5000-psi, 28-day compressive strength.

D. Packaging: Premixed and factory packaged.

PART 3 - EXECUTION

3.1 SLEEVE INSTALLATION

A. Install sleeves for piping passing through penetrations in floors, partitions, roofs, and walls.

B. For sleeves that will have sleeve-seal system installed, select sleeves of size large enough to provide 1-inch annular clear space between piping and concrete slabs and walls.

1. Sleeves are not required for core-drilled holes.

C. Install sleeves in concrete floors, concrete roof slabs, and concrete walls as new slabs and walls are constructed.

1. Permanent sleeves are not required for holes in slabs formed by molded-PE or -PP sleeves.
2. Cut sleeves to length for mounting flush with both surfaces.

a. Exception: Extend sleeves installed in floors of mechanical equipment areas or other wet areas 2 inches above finished floor level.

3. Using grout, seal the space outside of sleeves in slabs and walls without sleeve-seal system.

D. Install sleeves for pipes passing through interior partitions.

1. Cut sleeves to length for mounting flush with both surfaces.
2. Install sleeves that are large enough to provide 1/4-inch annular clear space between sleeve and pipe or pipe insulation.
3. Seal annular space between sleeve and piping or piping insulation; use joint sealants appropriate for size, depth, and location of joint. Comply with requirements for sealants specified in Section 07 9200 "Joint Sealants."

E. Fire-Barrier Penetrations: Maintain indicated fire rating of walls, partitions, ceilings, and floors at pipe penetrations. Seal pipe penetrations with firestop materials. Comply with requirements for firestopping specified in Section 07 8413 "Penetration Firestopping."

3.2 STACK-SLEEVE-FITTING INSTALLATION

A. Install stack-sleeve fittings in new slabs as slabs are constructed.

1. Install fittings that are large enough to provide 1/4-inch annular clear space between sleeve and pipe or pipe insulation.
2. Secure flashing between clamping flanges for pipes penetrating floors with membrane waterproofing. Comply with requirements for flashing specified in Section 07 6200 "Sheet Metal Flashing and Trim."
3. Install section of cast-iron soil pipe to extend sleeve to 2 inches above finished floor level.
4. Extend cast-iron sleeve fittings below floor slab as required to secure clamping ring if ring is specified.
5. Using grout, seal the space around outside of stack-sleeve fittings.

B. Fire-Barrier Penetrations: Maintain indicated fire rating of floors at pipe penetrations. Seal pipe

penetrations with firestop materials. Comply with requirements for firestopping specified in Section 07 8413 "Penetration Firestopping."

3.3 SLEEVE-SEAL-SYSTEM INSTALLATION

A. Install sleeve-seal systems in sleeves in exterior concrete walls and slabs-on-grade at service piping entries into building.

B. Select type, size, and number of sealing elements required for piping material and size and for sleeve ID or hole size. Position piping in center of sleeve. Center piping in penetration, assemble sleeve-seal system components, and install in annular space between piping and sleeve. Tighten bolts against pressure plates that cause sealing elements to expand and make a watertight seal.

3.4 SLEEVE-SEAL-FITTING INSTALLATION

A. Install sleeve-seal fittings in new walls and slabs as they are constructed.

B. Assemble fitting components of length to be flush with both surfaces of concrete slabs and walls. Position waterstop flange to be centered in concrete slab or wall.

C. Secure nailing flanges to concrete forms.

D. Using grout, seal the space around outside of sleeve-seal fittings.

3.5 SLEEVE AND SLEEVE-SEAL SCHEDULE

A. Use sleeves and sleeve seals for the following piping-penetration applications:

1. Exterior Concrete Walls above Grade:

   a. Piping Smaller Than NPS 6: Sleeve-seal fittings.
   b. Piping NPS 6 and Larger: Galvanized-steel-pipe sleeves with sleeve-seal system.

2. Exterior Concrete Walls below Grade:

   a. Piping Smaller Than NPS 6: Sleeve-seal fittings.

      1) Select sleeve size to allow for 1-inch annular clear space between piping and sleeve for installing sleeve-seal system.

   b. Piping NPS 6 Galvanized-steel-pipe sleeves with sleeve-seal system.

      1) Select sleeve size to allow for 1-inch annular clear space between piping and sleeve for installing sleeve-seal system.

3. Concrete Slabs-on-Grade:

   a. Piping Smaller Than NPS 6: Sleeve-seal fittings.

      1) Select sleeve size to allow for 1-inch annular clear space between piping

and sleeve for installing sleeve-seal system.

b. Piping NPS 6 Galvanized-steel-pipe sleeves with sleeve-seal system.

1) Select sleeve size to allow for 1-inch annular clear space between piping and sleeve for installing sleeve-seal system.

4. Concrete Slabs above Grade:

a. Piping Smaller Than NPS 6: PVC-pipe sleeves.
b. Piping NPS 6 PVC-pipe sleeves.

5. Interior Partitions:

a. Piping Smaller Than NPS 6 PVC-pipe sleeves.
b. Piping NPS 6 and Larger: Galvanized-steel-sheet sleeves.

END OF SECTION

SECTION 21 1100

FACILITY FIRE-SUPPRESSION WATER-SERVICE PIPING

PART 1 - GENERAL

1.1 RELATED DOCUMENTS

A. Drawings and general provisions of the Contract, including General and Supplementary Conditions and Division 01 Specification Sections, apply to this Section.

1.2 SUMMARY

A. Section includes fire-suppression water-service piping and related components outside the building and service entrance piping through floor into the building and the following:

1. Pipes, fittings, and specialties.
2. Fire-suppression specialty valves.
3. Alarm devices.

B. Utility-furnished products include water meters that are furnished to the site, ready for installation.

C. Related Requirements:
1. Section 21 1119 "Fire-Department Connections" for exposed-, flush-, and yard-type, fire-department connections.

1.3 ACTION SUBMITTALS

A. Product Data: For each type of product.

B. Shop Drawings:

1. Detail precast concrete vault assemblies and indicate dimensions, method of field assembly, and components.
2. Include diagrams for power, signal, and control wiring.

1.4 INFORMATIONAL SUBMITTALS

A. Coordination Drawings: For piping and specialties including relation to other services in same area, drawn to scale. Show piping and specialty sizes and valves, meter and specialty locations, and elevations.

B. Field quality-control reports.

1.5 QUALITY ASSURANCE

A. Regulatory Requirements:

1. Comply with requirements of utility company supplying the water. Include tapping of water mains and backflow prevention.
2. Comply with standards of authorities having jurisdiction for fire-suppression water-service piping, including materials, hose threads, installation, and testing.

B. Piping materials shall bear label, stamp, or other markings of specified testing agency.

C. Electrical Components, Devices, and Accessories: Listed and labeled as defined in NFPA 70, by a qualified testing agency, and marked for intended location and application.

D. Comply with FM Global's "Approval Guide" or UL's "Fire Protection Equipment Directory" for fire-service-main products.

E. NFPA Compliance: Comply with NFPA 24 for materials, installations, tests, flushing, and valve and hydrant supervision for fire-suppression water-service piping.

1.6 DELIVERY, STORAGE, AND HANDLING

A. Preparation for Transport: Prepare valves, including fire hydrants, according to the following:

1. Ensure that valves are dry and internally protected against rust and corrosion.
2. Protect valves against damage to threaded ends and flange faces.
3. Set valves in best position for handling. Set valves closed to prevent rattling.

B. During Storage: Use precautions for valves, including fire hydrants, according to the following:

1. Do not remove end protectors unless necessary for inspection; then reinstall for storage.
2. Protect from weather. Store indoors and maintain temperature higher than ambient dew point temperature. Support off the ground or pavement in watertight enclosures when outdoor storage is necessary.

C. Handling: Use sling to handle valves and fire hydrants if size requires handling by crane or lift. Rig valves to avoid damage to exposed parts. Do not use handwheels or stems as lifting or rigging points.

D. Deliver piping with factory-applied end caps. Maintain end caps through shipping, storage, and handling to prevent pipe-end damage and to prevent entrance of dirt, debris, and moisture.

E. Protect stored piping from moisture and dirt. Elevate above grade. Do not exceed structural capacity of floor when storing inside.

F. Protect flanges, fittings, and specialties from moisture and dirt.

G. Store plastic piping protected from direct sunlight. Support to prevent sagging and bending.

1.7 PROJECT CONDITIONS

A. Interruption of Existing Fire-Suppression Water-Service Piping: Do not interrupt service to

facilities occupied by Owner or others unless permitted under the following conditions and then only after arranging to provide temporary water-distribution service according to requirements indicated:

1. Notify Construction Manager no fewer than two days in advance of proposed interruption of service.
2. Do not proceed with interruption of service without Construction Manager's written permission.

PART 2 - PRODUCTS

2.1 DUCTILE-IRON PIPE AND FITTINGS

A. Grooved-Joint, Ductile-Iron Pipe: AWWA C151, with cut, rounded-grooved ends.

B. Mechanical-Joint, Ductile-Iron Pipe: AWWA C151, with mechanical-joint bell and plain spigot end.

C. Push-on-Joint, Ductile-Iron Pipe: AWWA C151, with push-on-joint bell and plain spigot end.

D. Grooved-End, Ductile-Iron Pipe Appurtenances:
   1. Grooved-End, Ductile-Iron Fittings: ASTM A 47/A 47M, malleable-iron castings or ASTM A 536, ductile-iron castings with dimensions matching pipe.
   2. Grooved-End, Ductile-Iron-Piping Couplings: AWWA C606, for ductile-iron-pipe dimensions. Include ferrous housing sections, gasket suitable for water, and bolts and nuts.

E. Mechanical-Joint, Ductile-Iron Fittings: AWWA C110, ductile- or gray-iron standard pattern or AWWA C153, ductile-iron compact pattern.

   1. Glands, Gaskets, and Bolts: AWWA C111, ductile- or gray-iron glands, rubber gaskets, and steel bolts.

F. Push-on-Joint, Ductile-Iron Fittings: AWWA C153, ductile-iron compact pattern.

   1. Gaskets: AWWA C111, rubber.

G. Flanges: ASME B16.1, Class 125, cast iron.

2.2 PE PIPE AND FITTINGS

A. PE, Fire-Service Pipe: FM Global approved, with minimum thickness equivalent to Class 150 and Class 200.

B. Molded PE Fittings: FM Global approved; PE butt-fusion type, made to match PE pipe dimensions and class.

2.3 PVC PIPE AND FITTINGS

A. PVC Pipe: AWWA C900 or UL 1285, Class 150 and Class 200, with bell end with gasket, and

with spigot end.

B. PVC Fittings: AWWA C900 or UL 1285, Class 150 and Class 200, with bell-and-spigot or double-bell ends. Include elastomeric gasket in each bell.

2.4 SPECIAL PIPE FITTINGS

A. Ductile-Iron Flexible Expansion Joints:
   1. Manufacturers
      a. Zurn Industries
      b. Star Pipe Industries
      c. Romac Industries

   2. Description: Compound, ductile-iron fitting with combination of flanged and mechanical-joint ends complying with AWWA C110 or AWWA C153. Include two gasketed ball-joint sections and one or more gasketed sleeve sections. Assemble components for offset and expansion indicated. Include AWWA C111, ductile-iron glands, rubber gaskets, and steel bolts.
   3. Pressure Rating: 250 psig (1725 kPa) minimum.

B. Ductile-Iron Deflection Fittings:
   1. Manufacturers
      a. EBAA Iron

   2. Description: Compound, ductile-iron coupling fitting with sleeve and one or two flexing sections for up to 15-degree deflection, gaskets, and restrained-joint ends complying with AWWA C110 or AWWA C153. Include AWWA C111, ductile-iron glands, rubber gaskets, and steel bolts.
   3. Pressure Rating: 250 psig (1725 kPa) minimum.

2.5 ENCASEMENT FOR PIPING

A. Standard: ASTM A 674 or AWWA C105.

B. Material: Linear low-density PE film of 0.008-inch (0.20-mm) minimum thickness or high-density, cross-laminated PE film of 0.004-inch (0.10-mm) minimum thickness.

C. Form: Sheet or tube.

D. Color: Black.

2.6 JOINING MATERIALS

A. Gaskets for Ferrous Piping and Copper-Alloy Tubing: ASME B16.21, asbestos free.

B. Brazing Filler Metals: AWS A5.8/A5.8M, BCuP Series.

C. Bonding Adhesive for Fiberglass Piping: As recommended by fiberglass piping manufacturer.

2.7 PIPING SPECIALTIES

A. Transition Fittings: Manufactured fitting or coupling same size as, with pressure rating at least equal to and ends compatible with, piping to be joined.

B. Tubular-Sleeve Pipe Couplings:
   1. Manufacturers
      a. Viking Johnson
      b. Romac Industries
      c. JCM Industries
   2. Description: Metal, bolted, sleeve-type, reducing or transition coupling, with center sleeve, gaskets, end rings, and bolt fasteners, and with ends of same sizes as piping to be joined.
   3. Standard: AWWA C219.
   4. Center-Sleeve Material: Manufacturer's standard.
   5. Gasket Material: Natural or synthetic rubber.
   6. Pressure Rating: 200 psig (1380 kPa) minimum.
   7. Metal Component Finish: Corrosion-resistant coating or material.

2.8 CORPORATION VALVES

A. Manufacturers
   1. Mueller Co.
   2. Master Meter, Inc.

B. Corporation Valves: Comply with AWWA C800. Include saddle and valve compatible with tapping machine and manifold.

   1. Service Saddle: Copper alloy with seal and AWWA C800, threaded outlet for corporation valve.
   2. Corporation Valve: Bronze body and ground-key plug, with AWWA C800, threaded inlet and outlet matching service piping material.
   3. Manifold: Copper fitting with two to four inlets as required, with ends matching corporation valves and outlet matching service piping material.

C. Meter Valves: Comply with AWWA C800 for high-pressure, service-line valves. Include angle- or straight-through-pattern bronze body, ground-key plug or ball, and wide tee head, with inlet and outlet matching service piping material.

2.9 CURB VALVES

A. Manufacturers
   1. Mueller Co.
   2. Master Meter, Inc.

B. Curb Valves: Comply with AWWA C800 for high-pressure, service-line valves. Valve has bronze body, ground-key plug or ball, wide tee head, and inlet and outlet matching service piping material.

C. Service Boxes for Curb Valves: Similar to AWWA M44 requirements for cast-iron valve boxes. Include cast-iron telescoping top section of length required for depth of burial of valve, plug with lettering "WATER," and bottom section with base that fits over curb valve and with a barrel approximately 3 inches (75 mm) in diameter.

1. Shutoff Rods: Steel; with tee-handle with one pointed end, stem of length to operate deepest buried valve, and slotted end matching curb valve.

D. Meter Valves: Comply with AWWA C800 for high-pressure, service-line valves. Include angle- or straight-through-pattern bronze body, ground-key plug or ball, and wide tee head, with inlet and outlet matching service piping material.

2.10 DETECTOR CHECK VALVES

A. Manufacturers
1. Ames Fire & Waterworks
2. WATTS
3. Globe Fire Sprinkler
4. Kennedy Valve Company

B. Description: Galvanized cast-iron body, bolted cover with air-bleed device for access to internal parts, and flanged ends. Include one-piece bronze disc with bronze bushings, pivot, and replaceable seat. Include threaded bypass taps in inlet and outlet for bypass meter connection. Set valve to allow minimal water flow through bypass meter when major water flow is required.

C. Standards: UL 312 and FM Global's "Approval Guide."

D. Pressure Rating: 175 psig (1200 kPa).

E. Water Meter: AWWA C700, disc type, at least one-fourth size of detector check valve. Include meter, bypass piping, gate valves, check valve, and connections to detector check valve.

2.11 BACKFLOW PREVENTERS

A. Double-Check, Detector-Assembly Backflow Preventers:

1. Ames Fire & Waterworks or equivalent
2. Standards: ASSE 1048 and UL's "Fire Protection Equipment Directory" listing or FM Global's "Approval Guide."
3. Operation: Continuous-pressure applications.
4. Pressure Loss: 5 psig (35 kPa) maximum, through middle one-third of flow range.
5. Body Material: Steel with interior lining complying with AWWA C550 or that is FDA approved.
6. End Connections: Flanged.
7. Configuration: Designed for horizontal, straight through flow.
8. Accessories:

    a. Valves: UL 262 and FM Global's "Approval Guide" listing; OS&Y gate type with flanged ends on inlet and outlet.
    b. Bypass: With displacement-type water meter, shutoff valves, and reduced-pressure backflow preventer.

B. Backflow Preventer Test Kits:

1. Apollo Flow Controls
2. Description: Factory calibrated, with gages, fittings, hoses, and carrying case with test-procedure instructions.

2.12 WATER METER BOXES

A. Description: Cast-iron body and cover for disc-type water meter, with lettering "WATER METER" on cover; and with slotted, open-bottom base section of length to fit over service piping.

1. Option: Base section may be cast-iron, PVC, clay, or other pipe.

B. Description: Cast-iron body and double cover for disc-type water meter, with lettering "WATER METER" on top cover; and with separate inner cover; air space between covers; and slotted, open-bottom base section of length to fit over service piping.

C. Description: Polymer-concrete body and cover for disc-type water meter, with lettering "WATER" on cover; and with slotted, open-bottom base section of length to fit over service piping. Include vertical and lateral design loadings of 15,000 lb minimum over 10 by 10 inches (6 800 kg minimum over 254 by 254 mm) square.

2.13 ALARM DEVICES

A. General: UL 753 and FM Global's "Approval Guide" listing, of types and sizes to mate and match piping and equipment.

B. Water-Flow Indicators: Vane-type water-flow detector, rated for 250-psig (1725-kPa) working pressure; designed for horizontal or vertical installation; with two single-pole, double-throw circuit switches to provide isolated alarm and auxiliary contacts, 7 A, 125-V ac and 0.25 A, 24-V dc; complete with factory-set, field-adjustable retard element to prevent false signals and tamperproof cover that sends signal when cover is removed.

C. Supervisory Switches: Single pole, double throw; designed to signal valve in other than fully open position.

D. Pressure Switches: Single pole, double throw; designed to signal increase in pressure.

PART 3 - EXECUTION

3.1 EARTHWORK

A. Comply with excavating, trenching, and backfilling requirements in Section 31 2000 "Earth Moving."

3.2 PIPING INSTALLATION

A. Water-Main Connection: Arrange with water utility company for tap of size and in location indicated in water main.

B. Water-Main Connection: Tap water main according to requirements of water utility company and of size and in location indicated.

C. Make connections larger than NPS 2 (DN 50) with tapping machine according to the following:

1. Install tapping sleeve and tapping valve according to MSS SP-60.
2. Install tapping sleeve on pipe to be tapped. Position flanged outlet for gate valve.
3. Use tapping machine compatible with valve and tapping sleeve; cut hole in main. Remove tapping machine and connect water-service piping.
4. Install gate valve onto tapping sleeve. Comply with MSS SP-60. Install valve with stem pointing up and with valve box.

D. Comply with NFPA 24 for fire-service-main piping materials and installation.

E. Install copper tube and fittings according to CDA's "Copper Tube Handbook."

1. Install encasement for tubing according to ASTM A 674 or AWWA C105.

F. Install ductile-iron, water-service piping according to AWWA C600 and AWWA M41.

1. Install encasement for piping according to ASTM A 674 or AWWA C105.

G. Install PE pipe according to ASTM D 2774 and ASTM F 645.

H. Install PVC, AWWA pipe according to ASTM F 645 and AWWA M23.

I. Bury piping with depth of cover over top at least 30 inches (750 mm), with top at least 12 inches (300 mm) below level of maximum frost penetration, and according to the following:

1. Under Driveways: With at least 36 inches (910 mm) of cover over top.
2. Under Railroad Tracks: With at least 48 inches (1220 mm) of cover over top.
3. In Loose Gravelly Soil and Rock: With at least 12 inches (300 mm) of additional cover.

J. Install piping by tunneling or jacking, or combination of both, under streets and other obstructions that cannot be disturbed.

K. Extend fire-suppression water-service piping and connect to water-supply source and building fire-suppression water-service piping systems at locations and pipe sizes indicated.

1. Terminate fire-suppression water-service piping within the building at the floor slab until building-water-piping systems are installed. Terminate piping with caps, plugs, or flanges as required for piping material. Make connections to building's fire-suppression water-service piping systems when those systems are installed.

L. Install underground piping with restrained joints at horizontal and vertical changes in direction. Use restrained-joint piping, thrust blocks, anchors, tie-rods and clamps, and other supports.

M. Comply with requirements in Section 21 1313 "Wet-Pipe Sprinkler Systems," for fire-suppression-water piping inside the building.

N. Comply with requirements in Section 22 1116 "Domestic Water Piping" for potable-water piping inside the building.

O. Install sleeves for piping penetrations of walls, ceilings, and floors. Comply with requirements for sleeves specified in Section 21 0517 "Sleeves and Sleeve Seals for Fire-Suppression Piping."

P. Install sleeve seals for piping penetrations of concrete walls and slabs. Comply with requirements for sleeve seals specified in Section 21 0517 "Sleeves and Sleeve Seals for Fire-Suppression Piping."

3.3 JOINT CONSTRUCTION

A. Install couplings, flanges, flanged fittings, unions, nipples, and transition and special fittings that have finish and pressure rating same as or higher than systems pressure rating for aboveground applications unless otherwise indicated.

B. Install unions adjacent to each valve in tubing NPS 2 (DN 50) and smaller.

C. Install flanges, flange adaptors, or couplings for grooved-end piping on valves, apparatus, and equipment having NPS 2-1/2 (DN 65) and larger end connections.

D. Ream ends of tubes and remove burrs.

E. Remove scale, slag, dirt, and debris from outside and inside of pipes, tubes, and fittings before assembly.

F. Ductile-Iron Piping, Gasketed Joints for Fire-Service-Main Piping: UL 194.

G. Ductile-Iron Piping, Grooved Joints: Cut-groove pipe. Assemble joints with grooved-end, ductile-iron-piping couplings, gaskets, lubricant, and bolts.

H. Flanged Joints: Select appropriate gasket material in size, type, and thickness suitable for water service. Join flanges with bolts according to ASME B31.9.

I. PE Piping Heat-Fusion Joints: Clean and dry joining surfaces by wiping with clean cloth or paper towels. Join according to ASTM D 2657.

J. PVC Piping Gasketed Joints: Use joining materials according to AWWA C900. Construct joints with elastomeric seals and lubricant according to ASTM D 2774 or ASTM D 3139.

K. Dissimilar Materials Piping Joints: Use adapters compatible with both piping materials, with OD, and with system working pressure.

L. Do not use flanges or unions for underground piping.

3.4 ANCHORAGE INSTALLATION

A. Anchorage, General: Install water-distribution piping with restrained joints. Anchorages and restrained-joint types that may be used include the following:

1. Concrete thrust blocks.
2. Locking mechanical joints.
3. Set-screw mechanical retainer glands.
4. Bolted flanged joints.
5. Heat-fused joints.
6. Pipe clamps and tie rods.

B. Install anchorages for tees, plugs and caps, bends, crosses, valves, and hydrant branches in fire-suppression water-service piping according to NFPA 24 and the following:

1. Gasketed-Joint, Ductile-Iron, Water-Service Piping: According to AWWA C600.
2. Gasketed-Joint, PVC Water-Service Piping: According to AWWA M23.
3. Bonded-Joint Fiberglass, Water-Service Piping: According to AWWA M45.

C. Apply full coat of asphalt or other acceptable corrosion-resistant material to surfaces of installed ferrous anchorage devices.

3.5 VALVE INSTALLATION

A. AWWA Gate Valves: Comply with AWWA C600 and AWWA M44. Install each underground valve with stem pointing up and with valve box.

B. AWWA Valves Other Than Gate Valves: Comply with AWWA C600 and AWWA M44.

C. UL-Listed or FM Global-Approved Gate Valves: Comply with NFPA 24. Install each underground valve and valves in vaults with stem pointing up and with vertical cast-iron indicator post.

D. UL-Listed or FM Global-Approved Valves Other Than Gate Valves: Comply with NFPA 24.

E. MSS Valves: Install as component of connected piping system.

F. Corporation Valves and Curb Valves: Install each underground curb valve with head pointed up and with service box.

G. Pressure-Reducing Valves: Install in vault or aboveground between shutoff valves.

H. Support valves and piping, not direct buried, on concrete piers. Comply with requirements for concrete piers in Section 03 3000 "Cast-in-Place Concrete."

3.6 DETECTOR CHECK VALVE INSTALLATION

A. Install in vault or aboveground.

B. Install for proper direction of flow. Install bypass with water meter, gate valves on each side of meter, and check valve downstream from meter.

C. Support detector check valves and piping on concrete piers. Comply with requirements for concrete piers in Section 03 3000 "Cast-in-Place Concrete."

3.7 BACKFLOW PREVENTER INSTALLATION

A. Install backflow preventers of type, size, and capacity indicated. Include valves and test cocks. Install according to requirements of plumbing and health department and authorities having jurisdiction.

B. Do not install backflow preventers that have relief drain in vault or in other spaces subject to flooding.

C. Do not install bypass piping around backflow preventers.

D. Support NPS 2-1/2 (DN 65) and larger backflow preventers and piping on concrete piers. Comply with requirements for concrete piers in Section 03 3000 "Cast-in-Place Concrete."

3.8 ALARM DEVICE INSTALLATION

A. General: Comply with NFPA 24 for devices and methods of valve supervision. Underground valves with valve box do not require supervision.

B. Supervisory Switches: Supervise valves in open position.

1. Valves: Grind away portion of exposed valve stem. Bolt switch, with plunger in stem depression, to OS&Y gate-valve yoke.
2. Indicator Posts: Drill and thread hole in upper-barrel section at target plate. Install switch, with toggle against target plate, on barrel of indicator post.

C. Locking and Sealing: Secure unsupervised valves as follows:

1. Valves: Install chain and padlock on open OS&Y gate valve.
2. Post Indicators: Install padlock on wrench on indicator post.

D. Pressure Switches: Drill and thread hole in exposed barrel of fire hydrant. Install switch.

E. Water-Flow Indicators: Install in water-service piping in vault. Select indicator with saddle and vane matching pipe size. Drill hole in pipe, insert vane, and bolt saddle to pipe.

F. Connect alarm devices to building's fire-alarm system. Wiring and fire-alarm devices are specified in Section 28 3111 "Digital, Addressable Fire-Alarm System."

3.9 CONNECTIONS

A. Connect fire-suppression water-service piping to existing water main. Use tapping sleeve and tapping valve.

B. Connect fire-suppression water-service piping to interior fire-suppression piping.

3.10 FIELD QUALITY CONTROL

A. Use test procedure prescribed by authorities having jurisdiction or, if method is not prescribed by authorities having jurisdiction, use procedure described below.

B. Piping Tests: Conduct piping tests before joints are covered and after concrete thrust blocks have hardened sufficiently. Fill pipeline 24 hours before testing and apply test pressure to stabilize system. Use only potable water.

C. Hydrostatic Tests: Test at not less than one-and-one-half times the working pressure for two hours.

1. Increase pressure in 50-psig (350-kPa) increments and inspect each joint between increments. Hold at test pressure for one hour; decrease to zero psig (zero kPa). Slowly increase again to test pressure and hold for one more hour. Maximum allowable leakage is 2 quarts (1.89 L) per hour per 100 joints. Remake leaking joints with new materials and repeat test until leakage is within allowed limits.

D. Prepare test and inspection reports.

3.11 IDENTIFICATION

A. Install continuous underground detectable warning tape during backfilling of trench for underground fire-suppression water-service piping. Locate below finished grade, directly over piping. Underground warning tapes are specified in Section 31 2000 "Earth Moving."

B. Permanently attach equipment nameplate or marker indicating plastic fire-suppression water-service piping or fire-suppression water-service piping with electrically insulated fittings, on main electrical meter panel. Comply with requirements for identifying devices in Section 22 0553 "Identification for Plumbing Piping and Equipment."

3.12 CLEANING

A. Clean and disinfect fire-suppression water-service piping as follows:

1. Purge new piping systems and parts of existing systems that have been altered, extended, or repaired before use.
2. Use purging and disinfecting procedure prescribed by authorities having jurisdiction or, if method is not prescribed by authorities having jurisdiction, use procedure described in NFPA 24 for flushing of piping. Flush piping system with clean, potable water until dirty water does not appear at points of outlet.
3. Use purging and disinfecting procedure prescribed by authorities having jurisdiction or, if method is not prescribed by authorities having jurisdiction, use procedure described in AWWA C651 or do as follows:

    a. Fill system or part of system with water/chlorine solution containing at least 50 ppm of chlorine; isolate and allow it to stand for 24 hours.
    b. Drain system or part of system of previous solution and refill with water/chlorine solution containing at least 200 ppm of chlorine; isolate and allow it to stand for three hours.
    c. After standing time, flush system with clean, potable water until no chlorine remains in water coming from system.
    d. Submit water samples in sterile bottles to authorities having jurisdiction. Repeat procedure if biological examination shows evidence of contamination.

B. Prepare reports of purging and disinfecting activities.

3.13 PIPING SCHEDULE

A. Underground fire-suppression water-service piping NPS 6 to NPS 12 (DN 150 to DN 300) shall be one of the following:

1. Grooved-end, ductile-iron pipe; grooved-end, ductile-iron pipe appurtenances; and grooved joints.
2. Mechanical-joint, ductile-iron pipe; mechanical-joint, ductile- or gray-iron, standard-pattern or ductile-iron, compact-pattern fittings; glands, gaskets, and bolts; and gasketed joints.
3. Push-on-joint, ductile-iron pipe; push-on-joint, ductile-iron compact-pattern fittings; and gasketed joints.
4. PVC, Class 200 pipe listed for fire-protection service; PVC fittings of same class as pipe; and gasketed joints.

B. Underslab fire-suppression water-service piping NPS 6 to NPS 12 (DN 150 to DN 300) one of

the following:

1. Grooved-end, ductile-iron pipe; grooved-end, ductile-iron pipe appurtenances; and grooved joints.
2. Mechanical-joint, ductile-iron pipe; mechanical-joint, ductile- or gray-iron, standard-pattern or ductile-iron, compact-pattern fittings; glands, gaskets, and bolts; and restrained, gasketed joints.

3.14 VALVE SCHEDULE

A. Underground fire-suppression water-service shutoff valves NPS 3 (DN 80) and larger shall be one of the following:

1. 200-psig (1380-kPa), AWWA, iron, nonrising-stem, resilient-seated gate valves.
2. 250-psig (1725-kPa), AWWA, iron, nonrising-stem, resilient-seated gate valves.
3. 250-psig (1725-kPa), UL-listed or FM Global-approved, iron, nonrising-stem gate valves.

B. Standard-pressure, aboveground fire-suppression water-service shutoff valves NPS 3 (DN 80) and larger shall be one of the following:

1. 200-psig (1380-kPa), AWWA, iron, OS&Y, resilient-seated gate valves.
2. 250-psig (1725-kPa), AWWA, iron, OS&Y, resilient-seated gate valves.
3. 250-psig (1725-kPa), UL-listed or FM Global-approved, iron, OS&Y gate valves.
4. AWWA or UL-listed or FM Global-approved butterfly valves.

C. Fire-suppression water-service check valves NPS 3 (DN 80) and larger shall be one of the following:

1. AWWA or UL-listed or FM Global-approved check valves.
2. UL-listed or FM Global-approved detector check valves.

END OF SECTION

SECTION 21 1119

FIRE-DEPARTMENT CONNECTIONS

PART 1 - GENERAL

1.1 RELATED DOCUMENTS

A. Drawings and general provisions of the Contract, including General and Supplementary Conditions and Division 01 Specification Sections, apply to this Section.

1.2 SUMMARY

A. Section Includes:
   1. Yard-type fire-department connections.

1.3 ACTION SUBMITTALS

A. Product Data: For each type of product.

   1. Include construction details, material descriptions, dimensions of individual components and profiles, and finishes for each fire-department connection. Contractor to coordinate type of FDC, location and finish with local AHJ.

PART 2 - PRODUCTS

2.1 YARD-TYPE FIRE-DEPARTMENT CONNECTION

A. Manufacturers:
   1. Elkhart Brass Mfg. Co.
   2. American Fire Hose and Cabinet
   3. Fire End & Croker Corp.
   4. (Owner Selection)

B. Standard: UL 405.

C. Type: Exposed, freestanding.

D. Pressure Rating: 175 psig.

E. Body Material: Corrosion-resistant metal.

F. Inlets: Brass with threads according to NFPA 1963 and matching local fire-department sizes and threads. Include extension pipe nipples, brass lugged swivel connections, and check devices or clappers.

G. Caps: Brass, lugged type, with gasket and chain.

H. Escutcheon Plate: Round, brass, floor type.

I. Outlet: Bottom, with pipe threads.

J. Number of Inlets: Two.

K. Sleeve: Not required.

L. Sleeve Height: 18 inches.

M. Escutcheon Plate Marking: Similar to "AUTO SPKR & STANDPIPE"

N. Finish: Polished chrome plated.

O. Outlet Size: NPS 6.

PART 3 - EXECUTION

3.1 EXAMINATION

A. Examine conditions, with Installer present, for compliance with requirements for installation tolerances and other conditions affecting performance of fire-department connections.

B. Examine roughing-in for fire-suppression standpipe system to verify actual locations of piping connections before fire-department connection installation.

C. Proceed with installation only after unsatisfactory conditions have been corrected.

3.2 INSTALLATION

A. Install yard-type fire-department connections in concrete slab support. Comply with requirements for concrete in Section 03 3000 "Cast-in-Place Concrete."

B. Install two protective pipe bollards around each fire-department connection. Comply with requirements for bollards in Section 05 5000 "Metal Fabrications."

C. Install automatic (ball-drip) drain valve at each check valve for fire-department connection.

END OF SECTION

SECTION 21 1313

WET-PIPE SPRINKLER SYSTEMS

PART 1 - GENERAL

1.1 RELATED DOCUMENTS

A. Drawings and general provisions of the Contract, including General and Supplementary Conditions and Division 01 Specification Sections, apply to this Section.

1.2 SUMMARY

A. Section Includes:

1. Pipes, fittings, and specialties.
2. Specialty valves.
3. Sprinklers.
4. Alarm devices.
5. Control panels.
6. Pressure gages.

B. Related Requirements:

1. Section 21 1119 "Fire Department Connections" for exposed-, flush-, and yard-type fire department connections.

1.3 DEFINITIONS

A. Standard-Pressure Sprinkler Piping: Wet-pipe sprinkler system piping designed to operate at working pressure of 175-psig maximum.

1.4 ACTION SUBMITTALS

A. Product Data: For each type of product.

1. Include rated capacities, operating characteristics, electrical characteristics, and furnished specialties and accessories.

B. Sustainable Design Submittals:

C. Shop Drawings: For wet-pipe sprinkler systems.

1. Include plans, elevations, sections, and attachment details.
2. Include diagrams for power, signal, and control wiring.

D. Delegated-Design Submittal: For wet-pipe sprinkler systems indicated to comply with performance requirements and design criteria, including analysis data signed and sealed by the qualified professional engineer responsible for their preparation.

1.5 INFORMATIONAL SUBMITTALS

A. Coordination Drawings: Sprinkler systems, drawn to scale, on which the following items are shown and coordinated with each other, using input from installers of the items involved:

1. Domestic water piping.
2. Compressed air piping.
3. HVAC hydronic piping.
4. Items penetrating finished ceiling include the following:

    a. Lighting fixtures.
    b. Air outlets and inlets.

B. Qualification Data: For qualified Installer and professional engineer.

C. Approved Sprinkler Piping Drawings: Working plans, prepared according to NFPA 13, that have been approved by authorities having jurisdiction, including hydraulic calculations if applicable.

D. Welding certificates.

E. Fire-hydrant flow test report.

F. Field Test Reports and Certificates: Indicate and interpret test results for compliance with performance requirements and as described in NFPA 13. Include "Contractor's Material and Test Certificate for Aboveground Piping."

G. Field quality-control reports.

1.6 CLOSEOUT SUBMITTALS

A. Operation and Maintenance Data: For wet-pipe sprinkler systems and specialties to include in emergency, operation, and maintenance manuals.

1.7 MAINTENANCE MATERIAL SUBMITTALS

A. Furnish extra materials that match products installed and that are packaged with protective covering for storage and identified with labels describing contents.

1. Sprinkler Cabinets: Finished, wall-mounted, steel cabinet with hinged cover, and with space for minimum of six spare sprinklers plus sprinkler wrench. Include number of sprinklers required by NFPA 13 and sprinkler wrench. Include separate cabinet with sprinklers and wrench for each type of sprinkler used on Project.

1.8 QUALITY ASSURANCE

A. Installer Qualifications:

1. Installer's responsibilities include designing, fabricating, and installing sprinkler systems and providing professional engineering services needed to assume engineering responsibility. Base calculations on results of fire-hydrant flow test.

a. Engineering Responsibility: Preparation of working plans, calculations, and field test reports by a qualified professional engineer.

B. Welding Qualifications: Qualify procedures and operators according to 2010 ASME Boiler and Pressure Vessel Code.

1.9 FIELD CONDITIONS

A. Interruption of Existing Sprinkler Service: Do not interrupt sprinkler service to facilities occupied by Owner or others unless permitted under the following conditions and then only after arranging to provide temporary sprinkler service according to requirements indicated:

1. Notify Construction Manager and Owner no fewer than two days in advance of proposed interruption of sprinkler service.
2. Do not proceed with interruption of sprinkler service without Construction Manager's and Owner's written permission.

PART 2 - PRODUCTS

2.1 PERFORMANCE REQUIREMENTS

A. Sprinkler system equipment, specialties, accessories, installation, and testing shall comply with the following:

1. NFPA 13.

B. Standard-Pressure Piping System Component: Listed for 175-psig minimum working pressure.

C. High-Pressure Piping System Component: Listed for 250-psig minimum working pressure.

D. Delegated Design: Engage a qualified professional engineer, as defined in Section 01 4000 "Quality Requirements," to design wet-pipe sprinkler systems.

1. Sprinkler system design shall be approved by authorities having jurisdiction.

a. Margin of Safety for Available Water Flow and Pressure: 5 PSI percent, including losses through water-service piping, valves, and backflow preventers.
b. Sprinkler Occupancy Hazard Classifications:
1) Building Service Areas: Ordinary Hazard, Group 1.
2) Electrical Equipment Rooms: Ordinary Hazard, Group 1.
3) General Storage Areas: Ordinary Hazard, Group 1.
4) Mechanical Equipment Rooms: Ordinary Hazard, Group 1.
5) Office and Public Areas: Light Hazard.

2. Minimum Density for Automatic-Sprinkler Piping Design:
a. Light-Hazard Occupancy: 0.10 gpm over 1500-sq. ft. area.
b. Ordinary-Hazard, Group 1 Occupancy: 0.15 gpm over 1500-sq. ft. area.
c. Ordinary-Hazard, Group 2 Occupancy: 0.20 gpm over 1500-sq. ft. area.

3. Maximum Protection Area per Sprinkler: According to UL listing.
4. Maximum Protection Area per Sprinkler:
a. Office Spaces: 225 sq. ft.

b. Storage Areas: 130 sq. ft.
c. Mechanical Equipment Rooms: 130 sq. ft.
d. Electrical Equipment Rooms: 130 sq. ft.
e. Other Areas: According to NFPA 13 recommendations unless otherwise indicated.

E. Seismic Performance: Sprinkler piping shall withstand the effects of earthquake motions determined according to NFPA 13 and ASCE/SEI 7.

2.2 STEEL PIPE AND FITTINGS

A. Standard-Weight Black-Steel Pipe: ASTM A 53/A 53M, Pipe ends may be factory or field formed to match joining method.

B. Schedule 10, Black-Steel Pipe: ASTM A 135/A 135M or ASTM A 795/A 795M, Schedule 10 in NPS 5 and smaller; and NFPA 13-specified wall thickness in NPS 6 to NPS 10, plain end.

C. Black-Steel Pipe Nipples: ASTM A 733, made of ASTM A 53/A 53M, standard-weight, seamless steel pipe with threaded ends.

D. Uncoated-Steel Couplings: ASTM A 865/A 865M, threaded.

E. Uncoated, Gray-Iron Threaded Fittings: ASME B16.4, Class 125, standard pattern.

F. Malleable- or Ductile-Iron Unions: UL 860.

G. Cast-Iron Flanges: ASME 16.1, Class 125.

H. Steel Flanges and Flanged Fittings: ASME B16.5, Class 150.

1. Pipe-Flange Gasket Materials: AWWA C110, rubber, flat face, 1/8 inch thick or EPDM rubber gasket.

a. Class 125 and Class 250, Cast-Iron, Flat-Face Flanges: Full-face gaskets.
b. Class 150 and Class 300, Ductile-Iron or -Steel, Raised-Face Flanges: Ring-type gaskets.

2. Metal, Pipe-Flange Bolts and Nuts: Carbon steel unless otherwise indicated.

I. Steel Welding Fittings: ASTM A 234/A 234M and ASME B16.9.

1. Welding Filler Metals: Comply with AWS D10.12M/D10.12 for welding materials appropriate for wall thickness and chemical analysis of steel pipe being welded.

J. Grooved-Joint, Steel-Pipe Appurtenances:

1. <u>Manufacturers:</u>
a. Anvil International
b. Tyco Fire Products
c. Victaulic Company
d. Approved Equal

2. Pressure Rating: 250-psig minimum.
3. Grooved-End Fittings for Steel Piping: ASTM A 47/A 47M, malleable-iron casting or ASTM A 536, ductile-iron casting, with dimensions matching steel pipe.

4. Grooved-End-Pipe Couplings for Steel Piping: AWWA C606 and UL 213 rigid pattern, unless otherwise indicated, for steel-pipe dimensions. Include ferrous housing sections, EPDM-rubber gasket, and bolts and nuts.

K. Steel Pressure-Seal Fittings: UL 213, FM Global-approved, 175-psig pressure rating with steel housing, rubber O-rings, and pipe stop; for use with fitting manufacturers' pressure-seal tools.

1. Manufacturers:
   a. Victaulic Company
   b. Approved Equal

L. Automatic (Ball Drip) Drain Valves:

1. Manufacturers:
   a. Reliable Automatic Sprinkler Co, Inc.
   b. Tyco Fire Products
   c. (Owner Selection)

2. Standard: UL 1726.
3. Pressure Rating: 175-psig minimum.
4. Type: Automatic draining, ball check.
5. Size: NPS 3/4 .
6. End Connections: Threaded.

M. Flow Detection and Test Assemblies:

1. Manufacturers:
   a. Reliable Automatic Sprinker Co,Inc.
   b. Tyco Fire Products
   c. Victaulic Company
   d. Approved Equal

2. Standard: UL's "Fire Protection Equipment Directory" or FM Global's "Approval Guide."
3. Pressure Rating: 175-psig minimum.
4. Body Material: Cast- or ductile-iron housing with orifice, sight glass, and integral test valve.
5. Size: Same as connected piping.
6. Inlet and Outlet: Threaded or grooved.

N. Sprinkler Inspector's Test Fittings:

1. Manufacturers:
   a. Tyco Fire Products
   b. Victaulic Company
   c. Viking Corp.

2. Standard: UL's "Fire Protection Equipment Directory" or FM Global's "Approval Guide."
3. Pressure Rating: 175-psig minimum.
4. Body Material: Cast- or ductile-iron housing with sight glass.
5. Size: Same as connected piping.
6. Inlet and Outlet: Threaded.

O. Flexible Sprinkler Hose Fittings:

1. Manufacturers:

a. Victaulic
b. Approved Equal

2. Standard: UL 1474.
3. Type: Flexible hose for connection to sprinkler, and with bracket for connection to ceiling grid.
4. Pressure Rating: 175-psig minimum.
5. Style 108 Coupling

2.3 SPRINKLERS

A. Manufacturers:
1. Victaulic Company
2. Tyco Fire Products
3. Viking Company

B. Listed in UL's "Fire Protection Equipment Directory" or FM Global's "Approval Guide."

C. Pressure Rating for Residential Sprinklers: 175-psig maximum.

D. Pressure Rating for Automatic Sprinklers: 175-psig minimum.

E. Pressure Rating for High-Pressure Automatic Sprinklers: 250-psig minimum.

F. Automatic Sprinklers with Heat-Responsive Element:
1. Nonresidential Applications: UL 199.
2. Characteristics: Nominal 1/2-inch orifice with Discharge Coefficient K of 5.6, and for "Ordinary" temperature classification rating unless otherwise indicated or required by application.

G. Open Sprinklers with Heat-Responsive Element Removed: UL 199.

1. Nominal Orifice: 1/2 inch, with discharge coefficient K between 5.3 and 5.8.
2. Nominal Orifice: 17/32 inch with discharge coefficient K between 7.4 and 8.2.

H. Sprinkler Finishes: Chrome plated, bronze and painted.

I. Sprinkler Escutcheons: Materials, types, and finishes for the following sprinkler mounting applications. Escutcheons for concealed, flush, and recessed-type sprinklers are specified with sprinklers.

1. Ceiling Mounting: Chrome-plated steel, two piece, with 1-inch vertical adjustment.
2. Sidewall Mounting: Chrome-plated steel, one piece.

J. Sprinkler Guards:

1. Manufacturers:
a. Victaulic Company
b. Tyco Fire Products
c. Viking Company

2. Standard: UL 199.

3. Type: Wire cage with fastening device for attaching to sprinkler.

2.4 ALARM DEVICES

A. Alarm-device types shall match piping and equipment connections.

B. Electrically Operated Alarm Bell:

1. Manufacturers:
   a. Fire-Lite Alarms, Inc.
   b. Notifier
   c. Potter Electric Signal Company
   d. Approved Equal

2. Standard: UL 464.
3. Type: Vibrating, metal alarm bell.
4. Size: 6” diameter.
5. Finish: Red-enamel factory finish, suitable for outdoor use.
6. Electrical Components, Devices, and Accessories: Listed and labeled as defined in NFPA 70, by a qualified testing agency, and marked for intended location and application.

C. Water-Flow Indicators:

1. Manufacturers:
   a. System Sensor
   b. Viking Corp.
   c. Potter Electric Signal Company
   d. Approved Equal

2. Standard: UL 346.
3. Water-Flow Detector: Electrically supervised.
4. Components: Two single-pole, double-throw circuit switches for isolated alarm and auxiliary contacts, 7 A, 125-V ac and 0.25 A, 24-V dc; complete with factory-set, field-adjustable retard element to prevent false signals and tamperproof cover that sends signal if removed.
5. Type: Paddle operated.
6. Pressure Rating: 250 psig.
7. Design Installation: Horizontal or vertical.

D. Valve Supervisory Switches:

1. Manufacturers:
   a. Fire-Lite Alarms, Inc.
   b. Potter Electric Signal Company
   c. System Sensor
   d. (Owner Selection)

2. Standard: UL 346.
3. Type: Electrically supervised.
4. Components: Single-pole, double-throw switch with normally closed contacts.
5. Design: Signals that controlled valve is in other than fully open position.

6. Electrical Components, Devices, and Accessories: Listed and labeled as defined in NFPA 70, by a qualified testing agency, and marked for intended location and application.

2.5 PRESSURE GAGES

A. Manufacturers:
   1. Ashcroft, Inc.
   2. AMETEK, Inc.
   3. AGF Manufacturing Inc.
   4. Approved Equal

B. Standard: UL 393.

C. Dial Size: 3-1/2- to 4-1/2-inch diameter.

D. Pressure Gage Range: 0- to 250-psig minimum.

E. Label: Include "WATER" label on dial face.

PART 3 - EXECUTION

3.1 PREPARATION

A. Perform fire-hydrant flow test according to NFPA 13 and NFPA 291. Use results for system design calculations required in "Quality Assurance" Article.

B. Report test results promptly and in writing.

3.2 SERVICE-ENTRANCE PIPING

A. Install shutoff valve, backflow preventer, fire pump, pressure gage, drain, and other accessories indicated at connection to water-service piping. Comply with requirements for backflow preventers in Section 21 1100 "Facility Fire-Suppression Water-Service Piping."

3.3 PIPING INSTALLATION

A. Locations and Arrangements: Drawing plans, schematics, and diagrams indicate general location and arrangement of piping. Install piping as indicated on approved working plans.

   1. Deviations from approved working plans for piping require written approval from authorities having jurisdiction. File written approval with Architect before deviating from approved working plans.
   2. Coordinate layout and installation of sprinklers with other construction that penetrates ceilings, including light fixtures, HVAC equipment, and partition assemblies.

B. Piping Standard: Comply with NFPA 13 requirements for installation of sprinkler piping.

C. Install seismic restraints on piping. Comply with NFPA 13 requirements for seismic-restraint device materials and installation.

D. Use listed fittings to make changes in direction, branch takeoffs from mains, and reductions in pipe sizes.

E. Install unions adjacent to each valve in pipes NPS 2 and smaller.

F. Install flanges, flange adapters, or couplings for grooved-end piping on valves, apparatus, and equipment having NPS 2-1/2 and larger end connections.

G. Install "Inspector's Test Connections" in sprinkler system piping, complete with shutoff valve, and sized and located according to NFPA 13.

H. Install sprinkler piping with drains for complete system drainage.

I. Install sprinkler control valves, test assemblies, and drain risers adjacent to standpipes when sprinkler piping is connected to standpipes.

J. Install automatic (ball drip) drain valve at each check valve for fire-department connection, to drain piping between fire-department connection and check valve. Install drain piping to and spill over floor drain or to outside building.

K. Install alarm devices in piping systems.

L. Install hangers and supports for sprinkler system piping according to NFPA 13. Comply with requirements for hanger materials in NFPA 13. In seismic-rated areas, refer to Section 21 0548 "Vibration and Seismic Controls for Fire-Suppression Piping and Equipment."

M. Install pressure gages on riser or feed main, at each sprinkler test connection, and at top of each standpipe. Include pressure gages with connection not less than NPS 1/4 and with soft-metal seated globe valve, arranged for draining pipe between gage and valve. Install gages to permit removal, and install where they are not subject to freezing.

N. Fill sprinkler system piping with water.

O. Install sleeves for piping penetrations of walls, ceilings, and floors. Comply with requirements for sleeves specified in Section 21 0517 "Sleeves and Sleeve Seals for Fire-Suppression Piping."

P. Install sleeve seals for piping penetrations of concrete walls and slabs. Comply with requirements for sleeve seals specified in Section 21 0517 "Sleeves and Sleeve Seals for Fire-Suppression Piping."

Q. Install escutcheons for piping penetrations of walls, ceilings, and floors.

3.4 JOINT CONSTRUCTION

A. Install couplings, flanges, flanged fittings, unions, nipples, and transition and special fittings that have finish and pressure ratings same as or higher than system's pressure rating for aboveground applications unless otherwise indicated.

B. Install unions adjacent to each valve in pipes NPS 2 and smaller.

C. Install flanges, flange adapters, or couplings for grooved-end piping on valves, apparatus, and equipment having NPS 2-1/2 and larger end connections.

D. Ream ends of pipes and tubes and remove burrs. Bevel plain ends of steel pipe.

E. Remove scale, slag, dirt, and debris from inside and outside of pipes, tubes, and fittings before assembly.

F. Flanged Joints: Select appropriate gasket material in size, type, and thickness suitable for water service. Join flanges with gasket and bolts according to ASME B31.9.

G. Threaded Joints: Thread pipe with tapered pipe threads according to ASME B1.20.1. Cut threads full and clean using sharp dies. Ream threaded pipe ends to remove burrs and restore full ID. Join pipe fittings and valves as follows:

1. Apply appropriate tape or thread compound to external pipe threads.
2. Damaged Threads: Do not use pipe or pipe fittings with threads that are corroded or damaged.

H. Steel-Piping, Pressure-Sealed Joints: Join lightwall steel pipe and steel pressure-seal fittings with tools recommended by fitting manufacturer.

I. Welded Joints: Construct joints according to AWS D10.12M/D10.12, using qualified processes and welding operators according to "Quality Assurance" Article.

1. Shop weld pipe joints where welded piping is indicated. Do not use welded joints for galvanized-steel pipe.

J. Steel-Piping, Cut-Grooved Joints: Cut square-edge groove in end of pipe according to AWWA C606. Assemble coupling with housing, gasket, lubricant, and bolts. Join steel pipe and grooved-end fittings according to AWWA C606 for steel-pipe joints.

K. Steel-Piping, Roll-Grooved Joints: Roll rounded-edge groove in end of pipe according to AWWA C606. Assemble coupling with housing, gasket, lubricant, and bolts. Join steel pipe and grooved-end fittings according to AWWA C606 for steel-pipe grooved joints.

3.5 VALVE AND SPECIALTIES INSTALLATION

A. Install listed fire-protection valves, trim and drain valves, specialty valves and trim, controls, and specialties according to NFPA 13 and authorities having jurisdiction.

B. Install listed fire-protection shutoff valves supervised open, located to control sources of water supply except from fire-department connections. Install permanent identification signs indicating portion of system controlled by each valve.

C. Install check valve in each water-supply connection. Install backflow preventers instead of check valves in potable-water-supply sources.

D. Specialty Valves:

1. Install valves in vertical position for proper direction of flow, in main supply to system.

3.6 SPRINKLER INSTALLATION

A. Install sprinklers in suspended ceilings in center of acoustical ceiling panels.

B. Install dry-type sprinklers with water supply from heated space. Do not install pendent or sidewall, wet-type sprinklers in areas subject to freezing.

3.7 IDENTIFICATION

A. Install labeling and pipe markers on equipment and piping according to requirements in NFPA 13.

3.8 FIELD QUALITY CONTROL

A. Perform the following tests and inspections:

1. Leak Test: After installation, charge systems and test for leaks. Repair leaks and retest until no leaks exist.
2. Test and adjust controls and safeties. Replace damaged and malfunctioning controls and equipment.
3. Flush, test, and inspect sprinkler systems according to NFPA 13, "Systems Acceptance" Chapter.
4. Energize circuits to electrical equipment and devices.
5. Coordinate with fire-alarm tests. Operate as required under the direction of low voltage technician.
6. Coordinate with fire-pump tests. Operate as required under the direction of low voltage technician.

7. Verify that equipment hose threads are same as local fire department equipment.

B. Sprinkler piping system will be considered defective if it does not pass tests and inspections.

C. Prepare test and inspection reports.

3.9 CLEANING

A. Clean dirt and debris from sprinklers.

B. Only sprinklers with their original factory finish are acceptable. Remove and replace any sprinklers that are painted or have any other finish than their original factory finish.

3.10 DEMONSTRATION

A. Train Owner's maintenance personnel to adjust, operate, and maintain specialty valves and pressure-maintenance pumps.

3.11 PIPING SCHEDULE

A. Piping between Fire Department Connections and Check Valves: Galvanized, standard-weight steel pipe with joints.

B. Sprinkler specialty fittings may be used, downstream of control valves, instead of specified fittings.

C. Standard-pressure, wet-pipe sprinkler system, NPS 2 and smaller, shall be one of the following:

1. Standard-weigh, black-steel pipe with threaded ends; uncoated, gray-iron threaded fittings; and threaded joints.

2. Standard-weight, black-steel pipe with cut- or roll-grooved ends; uncoated, grooved-end fittings for steel piping; grooved-end-pipe couplings for steel piping; and grooved joints.

D. Standard-pressure, wet-pipe sprinkler system, NPS 2-1/2 to NPS 4, shall be one of the following:

1. Standard-weight, black-steel pipe with threaded ends; uncoated, gray-iron threaded fittings; and threaded joints.
2. Standard-weight, black-steel pipe with cut- or roll-grooved ends; uncoated, grooved-end fittings for steel piping; grooved-end-pipe couplings for steel piping; and grooved joints.

E. Standard-pressure, wet-pipe sprinkler system, NPS 6 and larger, shall be one of the following:
1. Standard-weight, black-steel pipe with cut or roll grooved ends; uncoated, grooved-end fittings for steel piping; grooved-end-pipe couplings for steel piping; and grooved joints.
2. Standard-weight, black-steel pipe with plain ends; steel welding fittings; and welded joints.

3.12 SPRINKLER SCHEDULE

A. Use sprinkler types in subparagraphs below for the following applications:

1. Rooms without Ceilings: Upright sprinklers.
2. Rooms with Suspended Ceilings: Concealed sprinklers
3. Wall Mounting: Sidewall sprinklers.
4. Spaces Subject to Freezing: dry sprinklers, Upright, dry barrel sidewall sprinklers

B. Provide sprinkler types in subparagraphs below with finishes indicated.

1. Concealed Sprinklers: Rough brass, with factory-painted white cover plate.
2. Recessed Sprinklers: white, with white escutcheon.
3. Upright Sprinklers: rough bronze in unfinished spaces not exposed to view; wax coated where exposed to acids, chemicals, or other corrosive fumes.

END OF SECTION

SECTION 21 2200

CLEAN-AGENT FIRE-EXTINGUISHING SYSTEMS

PART 1 - GENERAL

1.1 RELATED DOCUMENTS

A. Drawings and general provisions of the Contract, including General and Supplementary Conditions and Division 01 Specification Sections, apply to this Section.

1.2 SUMMARY

A. Section Includes:

1. Piping and piping specialties.
2. Extinguishing-agent containers.
3. Extinguishing agent.
4. Detection and alarm devices.
5. Control and alarm panels.
6. Accessories.
7. Connection devices for and wiring between system components.
8. Connection devices for power and integration into building's fire-alarm system.

1.3 DEFINITIONS

A. ATS: Acceptance Testing Specifications.

B. EPO: Emergency Power Off.

1.4 ACTION SUBMITTALS

A. Product Data: For each type of product indicated.

B. Shop Drawings: For clean-agent fire-extinguishing system signed and sealed by a qualified professional engineer.

1. Include plans, elevations, sections, details, and attachments to other work.
2. Include design calculations.
3. Detail equipment assemblies and indicate dimensions, weights, loads, required clearances, method of field assembly, components, and location and size of each field connection.
4. Wiring Diagrams: For power, signal, and control wiring.

C. Delegated-Design Submittal: For clean-agent fire-extinguishing system signed and sealed by the qualified professional engineer.

1. Indicate compliance with performance requirements and design criteria, including

analysis data.

2. Include design calculations for weight, volume, and concentration of extinguishing agent required for each hazard area.
3. Indicate the Following on Reflected Ceiling Plans:

    a. Ceiling penetrations and ceiling-mounted items.
    b. Extinguishing-agent containers if mounted above floor, piping and discharge nozzles, detectors, and accessories.
    c. Method of attaching hangers to building structure.
    d. Other ceiling-mounted items including light fixtures, diffusers, grilles, speakers, sprinklers, and access panels.

4. Indicate the Following on Occupied Work Area Plans:

    a. Controls and alarms.
    b. Extinguishing-agent containers, piping and discharge nozzles if mounted in space, detectors, and accessories.
    c. Equipment and furnishings.

5. Indicate the Following on Access Floor Space Plans:

    a. Extinguishing-agent containers, piping and discharge nozzles, detectors, and accessories.
    b. Method of supporting piping.

6. Indicate the Following on Ceiling Plans:

    a. Extinguishing-agent containers, piping and discharge nozzles, detectors, and accessories.
    b. Method of supporting piping.
    c. Other equipment located in the ceiling space that is being protected including sprinkler piping, HVAC equipment, raceways, or conduit.

1.5 INFORMATIONAL SUBMITTALS

A. Coordination Drawings: Sprinkler systems, drawn to scale, on which the following items are shown and coordinated with each other, using input from Installers of the items involved:

1. Domestic water piping.
2. Items Penetrating Finished Ceiling Include the Following:

    a. Lighting fixtures.
    b. Air outlets and inlets.

B. Permit Approved Drawings: Working plans, prepared according to NFPA 2001, that have been approved by authorities having jurisdiction. Include design calculations.

C. Seismic Qualification Certificates: For extinguishing-agent containers and control panels from manufacturer.

1. Basis for Certification: Indicate whether withstand certification is based on actual test of assembled components or on calculation.
2. Dimensioned Outline Drawings of Equipment Unit: Identify center of gravity and locate

and describe mounting and anchorage provisions.

3. Detailed description of equipment anchorage devices on which the certification is based and their installation requirements.

D. Field quality-control reports.

1.6 CLOSEOUT SUBMITTALS

A. Operation and Maintenance Data: For special agent system to include in emergency, operation, and maintenance manuals.

1.7 MAINTENANCE MATERIAL SUBMITTALS

A. Furnish extra materials that match products installed and that are packaged with protective covering for storage and identified with labels describing contents. Deliver extra materials to Owner.

1. Detection Devices: Not less than 20 percent of amount of each type installed.
2. Container Valves: Not less than 10 percent of amount of each size and type installed.
3. Nozzles: Not less than 20 percent of amount of each type installed.
4. Extinguishing Agent: Not less than 100 percent of amount installed in largest hazard area. Include pressure-rated containers with valves.

1.8 QUALITY ASSURANCE

A. Electrical Components, Devices, and Accessories: Listed and labeled as defined in NFPA 70, by a qualified testing agency, and marked for intended location and application.

B. FM Global Compliance: Provide components that are FM Approved and that are listed in FM Global's "Approval Guide."

C. UL Compliance: Provide equipment listed in UL's "Fire Protection Equipment Directory."

D. Installation in compliance with NFPA 2001 "*Standard on Clean Agent Fire Extinguishing Systems.*"

PART 2 - PRODUCTS

2.1 CLEAN-AGENT SYSTEMS

A. Fike, Ansul, or equivalent.

B. Description: Clean-agent fire-extinguishing system shall be an engineered system for total flooding of the hazard area including the room cavity above the ceiling, below the ceiling, and below the raised floor. System includes separate zones above and below the ceiling and beneath the raised floor. If smoke is detected below the raised floor, extinguishing agent shall be discharged in the underfloor zone only. If smoke is detected below the ceiling, extinguishing agent shall be discharged in zones above and below the ceiling and below the floor. If smoke is detected above the ceiling, extinguishing agent shall be discharged in the zone above the

ceiling only.

C. Delegated Design: Design clean-agent fire-extinguishing system and obtain approval from authorities having jurisdiction. Design system for Class A, B, and C fires as appropriate for areas being protected, and include safety factor. Use clean agent indicated and in concentration suitable for normally occupied areas.

D. Performance Requirements: Discharge HFC 227ea within 10 seconds and maintain 7.1 percent concentration by volume at 70 deg F (21 deg C) for 10-minute holding time in hazard areas.

1. HFC 227ea concentration in hazard areas greater than 9 percent immediately after discharge or less than 5.8 percent throughout holding time will not be accepted without written authorization from Owner and authorities having jurisdiction.
2. System Capabilities: Minimum 620-psig (4278-kPa) calculated working pressure and 360-psig (2484-kPa) initial charging pressure.

E. Performance Requirements: Discharge FK-5-1-12 within 10 seconds and maintain 6.6 percent concentration by volume at 70 deg F (21 deg C) for 10-minute holding time in hazard areas.

1. FK-5-1-12 concentration in hazard areas greater than 10.0 percent immediately after discharge or less than 6.5 percent throughout holding time will not be accepted without written authorization from Owner and authorities having jurisdiction.
2. System Capabilities: Minimum 620-psig (4278-kPa) calculated working pressure and 360-psig (2484-kPa) initial charging pressure.

F. Performance Requirements: Discharge IG-541 within 60 seconds and maintain 38 percent concentration by volume at 70 deg F (21 deg C) for 10-minute holding time in hazard areas.

1. IG-541 concentration in hazard areas greater than 40 percent immediately after discharge or less than 32 percent throughout holding time will not be accepted without written authorization from Owner and authorities having jurisdiction.
2. System Capabilities: Minimum 2175-psig (15-MPa) calculated working pressure upstream from orifice union, minimum 1000-psig (6895-kPa) calculated working pressure downstream from orifice union, and 2175-psig (15-MPa) initial charging pressure.

G. Verified Detection: Devices located in single zone. Sound alarm on activating single-detection device, and discharge extinguishing agent on actuating second-detection device.

H. System Operating Sequence: System shall utilize air-sampling detectors reporting to a fully programmable microprocessor-based control panel programmed to operate as follows:
1. Air-Sampling System:

a. First Detection Level (Alert): Mild audible and visual indication on annunciator panel. Strobe lights flash slowly in the protected area.
b. Second Detection Level (Action): Strong audible and visual indication on annunciator panel. Strobe lights flash rapidly in the protected area.
c. Third Detection Level (Fire 1): Strong audible and visual indication on annunciator panel. Energize horn(s), bell(s), and strobe light(s) in the protected area and outside entry doors. Shut down air-conditioning and ventilating systems serving the protected area, and close doors in the protected area. Send signal to fire-alarm system, initiate 30-second time delay for extinguishing-agent discharge, and discharge extinguishing agent. At agent discharge, terminate power to equipment in the protected area.
d. Fourth Detection Level (Fire 2): Release interlock to allow water in piping to the sprinkler system.

I. Manual stations shall immediately discharge extinguishing agent when activated.

J. Operating abort switches will delay extinguishing-agent discharge while being activated, and switches must be reset to prevent agent discharge. Release of hand pressure on the switch will cause agent discharge if the time delay has expired.

K. EPO: Will terminate power to protected equipment immediately on actuation.

L. Low-Agent Pressure Switch: Initiate trouble alarm if sensing less than set pressure.

M. Power Transfer Switch: Transfer from normal to stand-by power source.

N. Seismic Performance: Fire-suppression piping and containers shall withstand the effects of earthquake motions determined according to ASCE/SEI 7.

1. The term "withstand" means "the unit will remain in place without separation of any parts from the device when subjected to the seismic forces specified [and the unit will be fully operational after the seismic event]."

2.2 PIPING MATERIALS

A. See ["HFC 227ea Agent Piping Applications"] ["IG-541 Agent Piping Applications"] ["FK-5-1-12 Agent Piping Applications"] Article for applications of pipe, tube, fitting, and joining materials.

B. Piping, Valves, and Discharge Nozzles: Comply with types and standards listed in NFPA 2001, Section "Distribution," for charging pressure of system.

2.3 PIPE AND FITTINGS

A. Steel Pipe: ASTM A 53/A 53M, Type S, Grade B or ASTM A 106/A 106M; Schedule 40, Schedule 80, and Schedule 160, seamless steel pipe.

1. Threaded Fittings:

a. Malleable-Iron Fittings: ASME B16.3, Class 300.
b. Flanges and Flanged Fittings: ASME B16.5, Class 300 unless Class 600 is indicated.
c. Fittings Working Pressure: 620 psig (4278 kPa) minimum.
d. Flanged Joints: Class 300 minimum.

2. Forged-Steel Welding Fittings: ASME B16.11, Class 3000, socket pattern.
3. Steel, Grooved-End Fittings: FM Approved and NRTL listed, ASTM A 47/A 47M malleable iron or ASTM A 536 ductile iron, with dimensions matching steel pipe and ends factory grooved according to AWWA C606.

B. Pipe-Flange Gasket Materials: Suitable for chemical and thermal conditions of piping system contents.

1. ASME B16.21, nonmetallic, flat, asbestos-free, 1/8-inch (3.2-mm) maximum thickness unless thickness or specific material is indicated.

C. Flange Bolts and Nuts: ASME B18.2.1, carbon steel.

D. Welding Filler Metals: Comply with AWS D10.12M/D10.12 for welding materials appropriate for wall thickness and chemical analysis of steel pipe being welded.

E. Steel, Keyed Couplings: UL 213, AWWA C606, approved or listed for clean-agent service, and matching steel-pipe dimensions. Include ASTM A 536, ductile-iron housing, rubber gasket, and steel bolts and nuts.

2.4 VALVES

A. General Valve Requirements:

1. UL listed or FM Approved for use in fire-protection systems.
2. Compatible with type of clean agent used.

B. Container Valves: With rupture disc or solenoid and manual-release lever, capable of immediate and total agent discharge and suitable for intended flow capacity.

C. Valves in Sections of Closed Piping and Manifolds: Fabricate to prevent entrapment of liquid or install valve and separate pressure relief device.

D. Valves in Manifolds: Check valve; installed to prevent loss of extinguishing agent when container is removed from manifold.

2.5 EXTINGUISHING-AGENT CONTAINERS

A. Description: Steel tanks complying with ASME Boiler and Pressure Vessel Code: Section VIII, for unfired pressure vessels. Include minimum working-pressure rating that matches system charging pressure, valve, pressure switch, and pressure gage.

1. Finish: **Manufacturer's standard color**, enamel or epoxy paint.
2. Manifold: Fabricate with valves, pressure switches, and connections for multiple storage containers, as indicated.
3. Manifold: Fabricate with valves, pressure switches, selector switch, and connections for main- and reserve-supply banks of multiple storage containers.
4. Storage-Tank Brackets: Factory- or field-fabricated retaining brackets consisting of steel straps and channels; suitable for container support, maintenance, and tank refilling or replacement.

2.6 FIRE-EXTINGUISHING CLEAN AGENT

A. HFC 227ea Clean Agent: Heptafluoropropane.

B. FK-5-1-12 Clean Agent: Dodecaflouro-2-methylpentan-3-one.

C. IG-541 Clean Agent: Mixture of nitrogen, argon, and carbon dioxide inert gases.

2.7 DISCHARGE NOZZLES

A. Equipment manufacturer's standard one-piece brass or aluminum alloy of type, size, discharge pattern, and capacity required for application.

2.8 MANIFOLD AND ORIFICE UNIONS

A. Description: NRTL-listed device with minimum 2175-psig (15-MPa) pressure rating, to control flow and reduce pressure of IG-541 gas in piping.

1. NPS 2 (DN 50) and Smaller: Piping assembly with orifice, sized for system design requirements.
2. NPS 2-1/2 (DN 65) and Larger: Piping assembly with nipple, sized for system design requirements.

2.9 CONTROL PANELS

A. Description: FM Approved or NRTL listed, including equipment and features required for testing, supervising, and operating fire-extinguishing system. Controls panels will be listed with all clean agent suppression gases and solenoids.

B. Power Requirements: 120/240-V ac; with electrical contacts for connection to system components and fire-alarm system, and transformer or rectifier as needed to produce power at voltage required for accessories and alarm devices.

C. Enclosure: NEMA ICS 6, Type 1, enameled-steel cabinet.

1. Mounting: **Surface.**

D. Supervised Circuits: Separate circuits for each independent hazard area.

1. Detection circuits equal to the required number of zones, or addressable devices assigned to the required number of zones.
2. Manual pull-station circuit.
3. Alarm circuit.
4. Release circuit.
5. Abort circuit.
6. EPO circuit.

E. Control-Panel Features:

1. Electrical contacts for shutting down fans, activating dampers, and operating system electrical devices.
2. Automatic switchover to standby power at loss of primary power.
3. Storage container, low-pressure indicator.
4. Service disconnect to interrupt system operation for maintenance with visual status indication on the annunciator panel.

F. Annunciator Panel: Graphic type showing protected, hazard-area plans, as well as locations of detectors and abort, EPO, and manual stations. Include lamps to indicate device-initiating alarm, electrical contacts for connection to control panel, and stainless-steel or aluminum enclosure.

G. Standby Power: Sealed lead calcium batteries with capacity to operate system for 24 hours and alarm for minimum of 15 minutes. Include automatic battery charger that has a varying charging rate between trickle and high depending on battery voltage, and that is capable of maintaining batteries fully charged. Include manual voltage control, dc voltmeter, dc ammeter, electrical contacts for connection to control panel, automatic transfer switch, and suitable enclosure.

2.10 DETECTION DEVICES

A. General Requirements for Detection Devices:

1. Comply with NFPA 2001, NFPA 72, and UL 268.
2. 24-V dc, nominal.

B. Ionization Detectors: Dual-chamber type, having sampling and referencing chambers, with smoke-sensing element.

C. Photoelectric Detectors: LED light source and silicon photodiode receiving element.

D. Remote Air-Sampling Detector System: Includes air-sampling pipe network, a laser-based photoelectric detector, a sample transport fan, and a control unit.

1. Pipe Network: CPVC tubing connects control unit with calibrated sampling holes.
2. Smoke Detector: Particle-counting type with continuous laser beam. Sensitivity adjustable to a minimum of four preset values.
3. Sample Transport Fan: Centrifugal type, creating a minimum static pressure of 0.05-inch wg (12.5 Pa) at all sampling ports.
4. Control Unit: Multizone unit as indicated on Drawings. Provides same system power supply, supervision, and alarm features as specified for the control panel plus separate trouble indication for airflow and detector problems.

E. Signals to the Central Fire Alarm Control Panel: Any type of local system trouble is reported to the central fire alarm control panel as a composite "trouble" signal. Alarms on each system zone are individually reported to the central fire alarm control panel as separately identified zones.

2.11 MANUAL STATIONS

A. General Description: Surface FM Approved or NRTL listed, with clear plastic hinged cover, 120-V ac or low voltage compatible with controls. Include contacts for connection to control panel.

B. Manual Release: "MANUAL RELEASE" caption, and red finish. Unit can manually discharge extinguishing agent with operating device that remains engaged until unlocked.

C. Abort Switch: "ABORT" caption, momentary contact, with green finish.

D. EPO Switch: "EPO" caption, with yellow finish.

2.12 SWITCHES

A. Description: FM Approved or NRTL listed, where available, 120-Vac or low voltage compatible with controls. Include contacts for connection to control panel.

1. Low-Agent Pressure Switches: Pneumatic operation.
2. Power Transfer Switches: Key-operation selector, for transfer of release circuit signal from main supply to reserve supply.
3. Door Closers: Magnetic retaining and release device or electrical interlock to cause the door operator to drive the door closed.

2.13 ALARM DEVICES

A. Description: Listed and labeled by an NRTL or FM Approved, low voltage, and surface mounting. Comply with requirements in Section 28 3111 "Digital, Addressable Fire-Alarm System" or Section 28 3112 "Zoned (DC Loop) Fire-Alarm System" for alarm and monitoring devices.

B. Bells: Minimum 6-inch (150-mm) diameter.

C. Horns: 90 to 94 dBA.

D. Strobe Lights: Translucent lens, with "FIRE" or similar caption.

PART 3 - EXECUTION

3.1 EXAMINATION

A. Examine areas and conditions, with Installer present, for compliance with hazard-area leakage requirements, installation tolerances, and other conditions affecting work performance.

B. Proceed with installation only after unsatisfactory conditions have been corrected.

3.2 HFC 227ea AGENT PIPING APPLICATIONS

A. Flanged pipe and fittings and flanged joints may be used to connect to specialties and accessories and where required for maintenance.

B. NPS 2 (DN 50) and Smaller: Schedule 40, steel pipe; malleable-iron threaded fittings; and threaded joints.

C. NPS 2-1/2 (DN 65) and Larger: Schedule 40, steel pipe; steel, grooved-end fittings; steel, keyed couplings; and grooved joints.

3.3 IG-541 AGENT PIPING APPLICATIONS

A. Piping between Storage Containers and Orifice Union: Schedule 80, steel pipe; forged-steel welding fittings; and welded joints, malleable-iron fittings with threaded or flanged joints.

B. Piping Downstream from Orifice Union: Schedule 40, steel pipe; forged-steel welding fittings; and welded joints, malleable-iron fittings with threaded or flanged joints.

3.4 FK-5-1-12 AGENT PIPING APPLICATIONS

A. Flanged pipe and fittings and flanged joints may be used to connect to specialties and accessories and where required for maintenance.

B. NPS 2 (DN 50) and Smaller: Schedule 40, steel pipe; malleable-iron threaded fittings; and threaded joints.

C. NPS 2-1/2 (DN 65) and Larger: Schedule 40, steel pipe; forged-steel welding fittings; and welded joint steel, grooved-end fittings; steel, keyed couplings; and grooved joints.

3.5 CLEAN-AGENT PIPING INSTALLATION

A. Install clean-agent extinguishing piping and other components level and plumb, according to manufacturers' written instructions.

B. Grooved Piping Joints: Groove pipe ends according to AWWA C606 dimensions. Assemble grooved-end steel pipe and steel, grooved-end fittings with steel, keyed couplings and lubricant according to manufacturer's written instructions.

C. Install extinguishing-agent containers anchored to substrate.

D. Install pipe and fittings, valves, and discharge nozzles according to requirements listed in NFPA 2001, Section "Distribution."

1. Install valves designed to prevent entrapment of liquid or install pressure relief devices in valved sections of piping systems.
2. Support piping using supports and methods according to NFPA 13.
3. Install seismic restraints for extinguishing-agent containers and piping systems.
4. Install control panels, detection system components, alarms, and accessories, complying with requirements of NFPA 2001, Section "Detection, Actuation, and Control Systems," as required for supervised system application.

3.6 CONNECTIONS

A. Drawings indicate general arrangement of piping, fittings, and specialties.

B. Where installing piping adjacent to equipment, allow space for service and maintenance.

C. Connect electrical devices to control panel and to building's fire-alarm system. Electrical power, wiring, and devices are specified in Section 28 3111 "Digital, Addressable Fire-Alarm System" or Section 28 3112 "Zoned (DC Loop) Fire-Alarm System."

3.7 IDENTIFICATION

A. Identify system components and equipment. Comply with requirements for identification specified in Section 26 0553 "Identification for Electrical Systems."

B. Identify piping, extinguishing-agent containers, other equipment, and panels according to NFPA 2001.

C. Install signs at entry doors for protected areas to warn occupants that they are entering a room protected with a clean-agent fire-extinguishing system.

D. Install signs at entry doors to advise persons outside the room the meaning of the horn(s), bell(s), and strobe light(s) outside the protected space.

3.8 FIELD QUALITY CONTROL

A. Testing Agency: Engage a qualified testing agency to perform tests and inspections.

B. Manufacturer's Field Service: Engage a factory-authorized service representative to inspect, test, and adjust components, assemblies, and equipment installations, including connections.

C. Perform tests and inspections.

1. Manufacturer's Field Service: Engage a factory-authorized service representative to inspect components, assemblies, and equipment installations, including connections, and to assist in testing.

D. Tests and Inspections:

1. After installing clean-agent extinguishing piping system and after electrical circuitry has been energized, test for compliance with requirements.
2. Perform each electrical test and visual and mechanical inspection stated in NETA ATS, Sections "Inspection and Test Procedures" and "System Function Tests." Certify compliance with test parameters.
3. Leak Test: After installation, charge system and test for leaks. Repair leaks and retest until no leaks exist.
4. Operational Test: After electrical circuitry has been energized, start units to confirm proper motor rotation and unit operation. Remove malfunctioning units, replace with new units, and retest.
5. Test and adjust controls and safeties. Replace damaged and malfunctioning controls and equipment.

E. Units will be considered defective if they do not pass tests and inspections.

F. Prepare test and inspection reports.

3.9 CLEANING

A. Each pipe section shall be cleaned internally after preparation and before assembly by means of swabbing, using a suitable nonflammable cleaner. Pipe network shall be free of particulate matter and oil residue before installing nozzles or discharge devices.

3.10 SYSTEM FILLING

A. Preparation:

1. Verify that piping system installation is completed and cleaned.
2. Check for complete enclosure integrity.
3. Check operation of ventilation and exhaust systems.

B. Filling Procedures:

1. Fill extinguishing-agent containers with extinguishing agent and pressurize to indicated charging pressure.
2. Install filled extinguishing-agent containers.
3. Energize circuits.

4. Adjust operating controls.

3.11 DEMONSTRATION

A. Engage a factory-authorized service representative to train Owner's maintenance personnel to adjust, operate, and maintain clean-agent fire-extinguishing systems.

END OF SECTION

SECTION 21 3113

ELECTRIC-DRIVE, CENTRIFUGAL FIRE PUMPS

PART 1 - GENERAL

1.1 RELATED DOCUMENTS

A. Drawings and general provisions of the Contract, including General and Supplementary Conditions and Division 01 Specification Sections, apply to this Section.

1.2 SUMMARY

A. Section Includes:
   1. In-line fire pumps.
   2. Fire-pump accessories and specialties.
   3. Flowmeter systems.

1.3 ACTION SUBMITTALS

A. Product Data: For each type of product. Include rated capacities, operating characteristics, performance curves, electrical characteristics, and furnished specialties and accessories.

B. Shop Drawings: For fire pumps, motor drivers, and fire-pump accessories and specialties.

   1. Include plans, elevations, sections, and mounting and attachment details.
   2. Include details of equipment assemblies. Indicate dimensions, weights, loads, required clearances, method of field assembly, components, and location and size of each field connection.
   3. Include diagrams for power, signal, and control wiring.

1.4 INFORMATIONAL SUBMITTALS

A. Seismic Qualification Certificates: For fire pumps, accessories, and components, from manufacturer.

   1. Basis for Certification: Indicate whether withstand certification is based on actual test of assembled components or on calculation.
   2. Dimensioned Outline Drawings of Equipment Unit: Identify center of gravity and locate and describe mounting and anchorage provisions.
   3. Detailed description of equipment anchorage devices on which the certification is based and their installation requirements.

B. Product Certificates: For each type of fire pump, from manufacturer.

C. Source quality-control reports.

D. Field quality-control reports.

1.5 CLOSEOUT SUBMITTALS

A. Operation and Maintenance Data: For fire pumps to include in operation and maintenance manuals.

PART 2 - PRODUCTS

2.1 PERFORMANCE REQUIREMENTS

A. NFPA Compliance: Comply with NFPA 20.

B. Seismic Performance: Fire pumps shall withstand the effects of earthquake motions determined according to **ASCE/SEI 7**.

1. The term "withstand" means "the unit will remain in place without separation of any parts from the device when subjected to the seismic forces specified **and the unit will be fully operational after the seismic event**.
2. Component Importance Factor: 1.5.

C. Pump Equipment, Accessory, and Specialty Pressure Rating: 175 psig minimum unless higher pressure rating is indicated.

D. Electrical Components, Devices, and Accessories: Listed and labeled as defined in NFPA 70, by a qualified testing agency, and marked for intended location and application.

2.2 GENERAL REQUIREMENTS FOR CENTRIFUGAL FIRE PUMPS

A. Description: Factory-assembled and -tested fire-pump and driver unit.

B. Base: Fabricated and attached to fire-pump and driver unit, with reinforcement to resist movement of pump during seismic events when base is anchored to building substrate.

C. Finish: Red paint applied to factory-assembled and -tested unit before shipping.

2.3 IN-LINE FIRE PUMPS

A. Manufacturers:
1. Peerless Pump Company
2. Patterson Pump Company
3. S.A. Armstrong Limited
4. (Owner Selection)

B. Pump:

1. Standard: UL 448, for in-line pumps for fire service.
2. Casing: Radially split case, cast iron, with ASME B16.1 pipe-flange connections.
3. Impeller: Cast bronze, statically and dynamically balanced, and keyed to shaft.
4. Wear Rings: Replaceable bronze.
5. Shaft and Sleeve: Steel shaft with bronze sleeve.

a. Shaft Bearings: Grease-lubricated ball bearings in cast-iron housing.
b. Seals: Stuffing box with minimum of four rings of graphite-impregnated braided yarn and bronze packing gland.

6. Mounting: Pump and driver shaft is vertical, with motor above pump and pump on base. Motor and pump rotating assembly shall be removable from top without removing the pump casing from the piping.

C. Coupling: None or rigid.

D. Driver:

1. Standard: UL 1004A.
2. Type: Electric motor; NEMA MG 1, polyphase Design B.

E. Capacities and Characteristics:

1. Rated Capacity: 750 gpm.
2. Total Rated Head: 100 psi.
3. Inlet Flange: Class 250.
4. Outlet Flange: Class 250.
5. Suction Head Available at Pump: 150 feet.
6. Motor Horsepower: 75 hp.
7. Motor Speed: 3550 rpm.
8. Electrical Characteristics:

a. Volts: 460 V.
b. Phase: Three.
c. Hertz: 60.

2.4 FIRE-PUMP ACCESSORIES AND SPECIALTIES

A. Automatic Air-Release Valves: Comply with NFPA 20 for installation in fire-pump casing.

B. Circulation Relief Valves: UL 1478, brass, spring loaded; for installation in pump discharge piping.

C. Relief Valves:

1. Manufacturers:
a. Zurn Industries
b. Cla-Val Automatic Control Valves
c. BERMAD Control Valves

2. Description: UL 1478, bronze or cast iron, spring loaded; for installation in fire-suppression water-supply piping.

D. Inlet Fitting: Eccentric tapered reducer at pump suction inlet.

E. Outlet Fitting: Concentric tapered reducer at pump discharge outlet.

F. Discharge Cone: Closed or open type.

G. Hose Valve Manifold Assembly:

1. Standard: Comply with requirements in NFPA 20.
2. Header Pipe: ASTM A 53/A 53M, Schedule 40, galvanized steel, with ends threaded according to ASME B1.20.1.
3. Header Pipe Fittings: ASME B16.4, galvanized cast-iron threaded fittings.
4. Automatic Drain Valve: UL 1726.
5. Manifold:

    a. Test Connections: Comply with UL 405; however, provide outlets without clappers instead of inlets.
    b. Body: Flush type, brass or ductile iron, with number of outlets required by NFPA 20.
    c. Nipples: ASTM A 53/A 53M, Schedule 40, galvanized-steel pipe, with ends threaded according to ASME B1.20.1.
    d. Adapters and Caps with Chain: Brass or bronze, with outlet threaded according to NFPA 1963 and matching local fire-department threads.
    e. Escutcheon Plate: Brass or bronze; rectangular.
    f. Hose Valves: UL 668, bronze, with outlet threaded according to NFPA 1963 and matching local fire-department threads.
    g. Exposed Parts Finish: Polished, chrome plated.
    h. Escutcheon Plate Marking: Equivalent to "FIRE PUMP TEST."

2.5 FLOWMETER SYSTEMS

A. Manufacturers:
1. Victaulic Company
2. Hydro Flow Products, Inc.
3. Emerson Process Management

B. Description: UL-listed or FM-Approved, fire-pump flowmeter system able to indicate flow to not less than 175 percent of fire-pump rated capacity.

C. Pressure Rating: 175 psig minimum.

D. Sensor: Annubar probe, orifice plate, or venturi unless otherwise indicated. Sensor size shall match pipe, tubing, flowmeter, and fittings.

E. Permanently Mounted Flowmeter: Compatible with flow sensor; with dial not less than 4-1/2 inches in diameter. Include bracket or device for wall mounting.

1. Tubing Package: NPS 1/4 plastic tubing with copper or brass fittings and valves.

F. Portable Flowmeter: Compatible with flow sensor; with dial not less than 4-1/2 inches in diameter and with two 12-foot- long hoses in carrying case.

2.6 GROUT

A. Standard: ASTM C 1107, Grade B, post-hardening and volume-adjusting, dry, hydraulic-cement grout.

B. Characteristics: Nonshrink and recommended for interior and exterior applications.

C. Design Mix: 5000-psi (34-MPa), 28-day compressive strength.

D. Packaging: Premixed and factory packaged.

2.7 SOURCE QUALITY CONTROL

A. Testing: Test and inspect fire pumps according to UL 448 requirements for "Operation Test" and "Manufacturing and Production Tests."

1. Verification of Performance: Rate fire pumps according to UL 448.

B. Fire pumps will be considered defective if they do not pass tests and inspections.

C. Prepare test and inspection reports.

PART 3 - EXECUTION

3.1 EXAMINATION

A. Examine equipment bases and anchorage provisions, with Installer present, for compliance with requirements for installation tolerances, and other conditions affecting performance of fire pumps.

B. Examine roughing-in for fire-suppression piping systems to verify actual locations of piping connections before fire-pump installation.

C. Proceed with installation only after unsatisfactory conditions have been corrected.

3.2 INSTALLATION

A. Fire-Pump Installation Standard: Comply with NFPA 20 for installation of fire pumps, relief valves, and related components.

B. Equipment Mounting:

1. Install fire pumps on cast-in-place concrete equipment bases. Comply with requirements for equipment bases and foundations specified in Section 03 3000 "Cast-in-Place Concrete." and Section 03 3053 "Miscellaneous Cast-in-Place Concrete."
2. Comply with requirements for vibration isolation and seismic-control devices specified in Section 21 0548 "Vibration and Seismic Controls for Fire-Suppression Piping and Equipment."
3. Comply with requirements for vibration isolation devices specified in Section 21 0548.13 "Vibration Controls for Fire-Suppression Piping and Equipment."

C. Install fire-pump suction and discharge piping equal to or larger than sizes required by NFPA 20.

D. Support piping and pumps separately, so weight of piping does not rest on pumps.

E. Install valves that are same size as connecting piping. Comply with requirements for fire-

protection valves specified in Section 21 1313 "Wet-Pipe Sprinkler Systems."

F. Install pressure gages on fire-pump suction and discharge flange pressure-gage tappings. Comply with requirements for pressure gages specified in Section 21 1313 "Wet-Pipe Sprinkler Systems."

G. Install piping hangers and supports, anchors, valves, gages, and equipment supports according to NFPA 20.

H. Install flowmeters and sensors. Install flowmeter-system components and make connections according to NFPA 20 and manufacturer's written instructions.

I. Electrical Wiring: Install electrical devices furnished by equipment manufacturers but not factory mounted. Furnish copies of manufacturers' wiring diagram submittals to electrical Installer.

J. Wiring Method: Conceal conductors and cables in accessible ceilings, walls, and floors where possible.

3.3 ALIGNMENT

A. After alignment is correct, tighten anchor bolts evenly. Fill baseplate completely with grout, with metal blocks and shims or wedges in place. Tighten anchor bolts after grout has hardened. Check alignment and make required corrections.

B. Align piping connections.

C. Align pump and driver shafts for angular and parallel alignment according to HI 1.4 and to tolerances specified by manufacturer.

3.4 CONNECTIONS

A. Comply with requirements for piping and valves specified in Section 21 1313 "Wet-Pipe Sprinkler Systems." Drawings indicate general arrangement of piping, fittings, and specialties.

B. Install piping adjacent to pumps and equipment to allow service and maintenance.

C. Connect relief-valve discharge to drainage piping or point of discharge.

D. Connect flowmeter-system meters, sensors, and valves to tubing.

E. Connect fire pumps to their controllers.

3.5 IDENTIFICATION

A. Identify system components. Comply with requirements for fire-pump marking according to NFPA 20.

3.6 FIELD QUALITY CONTROL

A. Test each fire pump with its controller as a unit. Comply with requirements for electric-motor-

driver fire-pump controllers specified in Section 21 3900 "Controllers for Fire-Pump Drivers."

B. Manufacturer's Field Service: Engage a factory-authorized service representative to inspect, test, and adjust components, assemblies, and equipment installations, including connections.

C. Perform the following tests and inspections with the assistance of a factory-authorized service representative.

1. After installing components, assemblies, and equipment, including controller, test for compliance with requirements.
2. Test according to NFPA 20 for acceptance and performance testing.
3. Leak Test: After installation, charge system and test for leaks. Repair leaks and retest until no leaks exist.
4. Operational Test: After electrical circuitry has been energized, start units to confirm proper motor rotation and unit operation.
5. Test and adjust controls and safeties. Replace damaged and malfunctioning controls and equipment.

D. Components, assemblies, and equipment will be considered defective if they do not pass tests and inspections.

E. Prepare test and inspection reports.

F. Furnish fire hoses in number, size, and length required to reach storm drain or other acceptable location to dispose of fire-pump test water. Hoses are for tests only and do not convey to Owner.

3.7 STARTUP SERVICE

A. Engage a factory-authorized service representative to perform startup service.

1. Complete installation and startup checks according to manufacturer's written instructions.

3.8 DEMONSTRATION

A. Engage a factory-authorized service representative to train Owner's maintenance personnel to adjust, operate, and maintain fire pumps.

END OF SECTION

SECTION 21 3900

CONTROLLERS FOR FIRE-PUMP DRIVERS

PART 1 - GENERAL

1.1 RELATED DOCUMENTS

A. Drawings and general provisions of the Contract, including General and Supplementary Conditions and Division 01 Specification Sections, apply to this Section.

1.2 SUMMARY

A. Section Includes:

1. Full-service, full-voltage controllers rated 600 V and less.
2. Controllers for pressure-maintenance pumps.
3. Remote alarm panels.
4. Low-suction-shutdown panels.

1.3 DEFINITIONS

A. ATS: Automatic transfer switch(es).

B. ECM: Electronic control module.

C. MCCB: Molded-case circuit breaker.

D. N.O.: Normally open.

1.4 PERFORMANCE REQUIREMENTS

A. Seismic Performance: Fire-pump controllers and alarm panels shall withstand the effects of earthquake motions determined according to ASCE/SEI 7.

1. The term "withstand" means "the unit will remain in place without separation of any parts from the device when subjected to the seismic forces specified and the unit will be fully operational after the seismic event."

1.5 ACTION SUBMITTALS

A. Product Data: For each type of product indicated. Include rated capacities, operating characteristics, electrical characteristics, and furnished specialties and accessories**.**

B. Shop Drawings: For each type of product indicated. Include dimensioned plans, elevations, sections, details, and attachments to other work, including required clearances and service spaces around controller enclosures.

1. Show tabulations of the following:

    a. Each installed unit's type and details.
    b. Enclosure types and details for types other than NEMA 250, Type 2.
    c. Factory-installed devices.
    d. Nameplate legends.
    e. Short-circuit current (withstand) rating of integrated unit.
    f. Features, characteristics, ratings, and factory settings of individual overcurrent protective devices.
    g. Specified modifications.

2. Detail equipment assemblies and indicate dimensions, weights, loads, method of field assembly, components, and location and size of each field connection.
3. Schematic and Connection Diagrams: For power, signal, alarm, and control wiring and for pressure-sensing tubing.

1.6 INFORMATIONAL SUBMITTALS

A. Qualification Data: For qualified testing agency.

B. Seismic Qualification Certificates: For each type of product indicated, from manufacturer.

1. Basis for Certification: Indicate whether withstand certification is based on actual test of assembled components or on calculation.
2. Dimensioned Outline Drawings of Equipment Unit: Identify center of gravity and locate and describe mounting and anchorage provisions.
3. Detailed description of equipment anchorage devices on which the certification is based and their installation requirements.

C. Product Certificates: For each type of product indicated, from manufacturer.

D. Manufacturer's factory test reports of fully assembled and tested equipment.

E. Source quality-control reports.

F. Field quality-control reports.

1.7 CLOSEOUT SUBMITTALS

A. Operation and Maintenance Data: For each type of product indicated to include in emergency, operation, and maintenance manuals. In addition to items specified in Section 01 7823 "Operation and Maintenance Data," include the following:

1. Manufacturer's written instructions for setting field-adjustable timers, controls, and status and alarm points.
2. Manufacturer's written instructions for testing, adjusting, and reprogramming microprocessor-based logic controls.

1.8 MAINTENANCE MATERIAL SUBMITTALS

A. Furnish extra materials that match products installed and that are packaged with protective covering for storage and identified with labels describing contents.

1. Indicating Lights: Two of each type and color of lens installed; two of each type and size of lamp installed.
2. Auxiliary Contacts: One for each size and type of magnetic contactor installed.
3. Power Contacts: Three for each size and type of magnetic contactor installed.
4. Contactor Coils: One for each size and type of magnetic controller installed.
5. Relay Boards: One for each size and type of relay board installed.
6. Operator Interface: One microprocessor board(s), complete with display and membrane keypad.

1.9 QUALITY ASSURANCE

A. Testing Agency Qualifications: Member company of an NRTL.

B. Source Limitations: Obtain fire-pump controllers and all associated equipment from single source or producer.

C. Electrical Components, Devices, and Accessories: Listed and labeled as defined in NFPA 70, by a qualified testing agency, and marked for intended location and application.

D. Comply with standards of authorities having jurisdiction pertaining to materials and installation.

E. Comply with NFPA 20 and NFPA 70.

F. IEEE Compliance: Fabricate and test enclosed controllers according to IEEE 344 to withstand seismic forces defined in Section 26 0548.16 "Seismic Controls for Electrical Systems."

1.10 DELIVERY, STORAGE, AND HANDLING

A. Store controllers indoors in clean, dry space with uniform temperature to prevent condensation. Protect enclosed controllers from exposure to dirt, fumes, water, corrosive substances, and physical damage.

1.11 PROJECT CONDITIONS

A. Environmental Limitations:

1. Ambient Temperature Rating: Not less than 40 deg F (5 deg C) and not exceeding 122 deg F (50 deg C) unless otherwise indicated.
2. Altitude Rating: Not exceeding 6600 feet (2010 m) unless otherwise indicated.

B. Interruption of Existing Electric Service: Notify Construction Manager no fewer than seven days in advance of proposed interruption of electric service and comply with NFPA 70E.

1.12 COORDINATION

A. Coordinate layout and installation of controllers with other construction including conduit, piping, fire-pump equipment, and adjacent surfaces. Maintain required clearances for workspace and equipment access doors and panels. Ensure that controllers are within sight of fire-pump drivers.

B. Coordinate sizes and locations of concrete bases with actual equipment provided.

PART 2 - PRODUCTS

2.1 FULL-SERVICE CONTROLLERS

A. Manufacturers
   1. ASCO
   2. Eaton
   3. Master Control Systems

B. General Requirements for Full-Service Controllers:

   1. Comply with NFPA 20 and UL 218.
   2. Listed by an NRTL for electric-motor driver for fire-pump service.
   3. Combined automatic and nonautomatic operation.
   4. Factory assembled, wired, and tested; continuous-duty rated.
   5. Service Equipment Label: NRTL labeled for use as service equipment.

C. Method of Starting:

   1. Pressure-switch actuated.

      a. Water-pressure-actuated switch and pressure transducer with independent high- and low-calibrated adjustments responsive to water pressure in fire-suppression piping.
      b. System pressure recorder, electric ac driven, with spring backup.
      c. Programmable minimum-run-time relay to prevent short cycling.
      d. Programmable timer for weekly tests.

   2. Magnetic Controller: Across-the-line type.
   3. Solid-State Controller: Reduced-voltage type.
   4. Emergency Start: Mechanically operated start handle that closes and retains the motor RUN contactor independent of all electric or pressure actuators.

D. Method of Stopping: Automatic and nonautomatic shutdown after automatic starting.

E. Capacity: Rated for fire-pump-driver horsepower and short-circuit-current (withstand) rating equal to or greater than short-circuit current available at controller location.

F. Method of Isolation and Overcurrent Protection: Interlocked isolating switch and nonthermal MCCB; with a common, externally mounted operating handle, and providing locked-rotor protection.

G. Door-Mounted Operator Interface and Controls:

   1. Monitor, display, and control the devices, alarms, functions, and operations listed in NFPA 20 as required for drivers and controller types used.
   2. Method of Control and Indication:

      a. Microprocessor-based logic controller, with multiline digital readout.
      b. Membrane keypad.
      c. LED alarm and status indicating lights.

   3. Local and Remote Alarm and Status Indications:

a. Controller power on.
b. Motor running condition.
c. Loss-of-line power.
d. Line-power phase reversal.
e. Line-power single-phase condition.

4. Audible alarm, with silence push button.
5. Nonautomatic START and STOP push buttons or switches.

H. Optional Features:

1. Extra Output Contacts:

a. One N.O. contact(s) for motor running condition.
b. One set(s) of contacts for loss-of-line power.
c. One each, Form C contacts for high and low reservoir level.

2. Local alarm bell.
3. Door-mounted thermal or impact printer for alarm and status logs.
4. Operator Interface Communications Ports: USB, Ethernet, and RS485.

I. ATS:

1. Complies with NFPA 20, UL 218, and UL 1008.
2. Integral with controller as a listed combination fire-pump controller and power transfer switch.
3. Automatically transfers fire-pump controller from normal power supply to alternate power supply in event of power failure.
4. Allows manual transfer from one source to the other.
5. Alternate-Source Isolating and Disconnecting Means: Integral molded-case switch, with an externally mounted operating handle.
6. Alternate-Source Isolating and Disconnecting Means: Mechanically interlocked isolation switch and circuit breaker rated at a minimum of 115 percent of rated motor full-load current, with an externally mounted operating handle; circuit breaker shall be provided with nonthermal sensing, instantaneous-only short-circuit overcurrent protection to comply with available fault currents.
7. Local and Remote Alarm and Status Indications:

a. Normal source available.
b. Alternate source available.
c. In normal position.
d. In alternate position.
e. Isolating means open.

8. Audible alarm, with silence push button.
9. Nonautomatic (manual, nonelectric) means of transfer.
10. Engine test push button.
11. Start generator output contacts.
12. Timer for weekly generator tests.

2.2 CONTROLLERS FOR PRESSURE-MAINTENANCE PUMPS

A. Manufacturers
1. ASCO

2. Eaton
3. Master Control Systems

B. General Requirements for Pressure-Maintenance-Pump Controllers:

1. Type: UL 508 factory assembled, -wired, and tested, across-the-line; for combined automatic and manual operation.
2. Enclosure: UL 508 and NEMA 250, Type 2 for wall-mounting.
3. Factory assembled, wired, and tested.
4. Finish: Manufacturer's standard color paint.

C. Rate controller for scheduled horsepower and include the following:

1. Fusible disconnect switch.
2. Pressure switch.
3. Hand-off-auto selector switch.
4. Pilot light.
5. Running period timer.

2.3 REMOTE ALARM PANELS

A. General Requirements for Remote Alarm Panels: Comply with NFPA 20 and UL 218; listed by an NRTL for fire-pump service.

A. Manufacturers
1. ASCO
2. Eaton
3. Master Control Systems

B. General Requirements for Remote Alarm Panels: Factory assembled, wired, and tested.

C. Supervisory and Normal Control Voltage: 120-V ac; single source.

D. Audible and Visual Alarm and Status Indications:

1. Driver running.
2. Loss of phase.
3. Phase reversal.
4. Supervised power on.
5. Common trouble on the controller.

6. Controller connected to alternate power source.

E. Audible and Visual Alarm and Status Indications: Manufacturer's standard indicating lights; push-to-test.

1. Engine running.
2. Controller main switch turned to the off or manual position.
3. Supervised power on.

4. Common trouble on the controller or engine..

5. Common pump room trouble.
6. Controller connected to alternate power source.

F. Audible alarm, with silence push button.

G. Pump REMOTE START push button.

2.4 LOW-SUCTION-SHUTDOWN PANELS

A. Manufacturers
   1. ASCO
   2. Master Control Systems

B. General Requirements for Low-Suction-Shutdown Panels:

   1. Listed by an NRTL for fire-pump service.
   2. Factory assembled, wired, and tested.
   3. Prevents automatic start of fire pump, and shuts down automatically started fire pump, on low-suction pressure.
   4. Automatic reset.

C. Operation: External contact input.

D. Supervisory and Normal Control Voltage: 120-V ac; single source.

E. Include audible and visual alarms and status indications, with silence push button, for the following conditions:

   1. Control power available.
   2. Low-suction pressure.
   3. Normal-suction pressure.

2.5 ENCLOSURES

A. Fire-Pump Controllers, ATS, Remote Alarm Panels, and Low-Suction-Shutdown Panels: NEMA 250, to comply with environmental conditions at installed locations and NFPA 20.

   1. Indoor, Dry and Clean Locations: Type 1 (IEC IP10).
   2. Indoor Locations Subject to Dripping Noncorrosive Liquids: Type 2 (IEC IP11).
   3. Indoor Locations Subject to Dust, Falling Dirt, and Dripping Noncorrosive Liquids: Type 12 (IEC IP12).

B. Enclosure Color: Manufacturer's standard "fire-pump-controller red".

C. Nameplates: Comply with NFPA 20; complete with capacity, characteristics, approvals, listings, and other pertinent data.

D. Optional Features:

   1. Floor stands, 12 inches (305 mm) high, for floor-mounted controllers.
   2. Space heater, 120-V ac, with thermostat.
   3. Tropicalization.

2.6 SOURCE QUALITY CONTROL

A. Testing: Test and inspect fire-pump controllers according to requirements in NFPA 20 and UL 218.

1. Verification of Performance: Rate controllers according to operation of functions and features specified.

B. Fire-pump controllers will be considered defective if they do not pass tests and inspections.

C. Prepare test and inspection reports.

PART 3 - EXECUTION

3.1 EXAMINATION

A. Examine areas and surfaces to receive equipment, with Installer present, for compliance with requirements and other conditions affecting performance.

B. Examine equipment before installation. Reject equipment that is wet or damaged by moisture or mold.

C. Proceed with installation only after unsatisfactory conditions have been corrected.

3.2 CONTROLLER INSTALLATION

A. Install controllers within sight of their respective drivers.

B. Connect controllers to their dedicated pressure-sensing lines.

C. Wall-Mounting Controllers: Install controllers on walls with disconnect operating handles not higher than 79 inches (2006 mm) above finished floor, and bottom of enclosure not less than 12 inches (305 mm) above finished floor unless otherwise indicated. Bolt units to wall or mount on lightweight structural-steel channels bolted to wall. For controllers not on walls, provide freestanding racks complying with Section 26 0529 "Hangers and Supports for Electrical Systems."

D. Floor-Mounting Controllers: Install controllers on 4-inch (100-mm) nominal-thickness concrete bases, using floor stands high enough so that the bottom of enclosure cabinet is not less than 12 inches (305 mm) above finished floor. Comply with requirements for concrete bases specified in Section 03 3000 "Cast-in-Place Concrete."

1. Install dowel rods to connect concrete base to concrete floor. Unless otherwise indicated, install dowel rods on 18-inch (450-mm) centers around the full perimeter of concrete base.
2. For supported equipment, install epoxy-coated anchor bolts that extend through concrete base, and anchor into structural concrete floor.
3. Place and secure anchorage devices. Use setting drawings, templates, diagrams, instructions, and directions furnished with items to be embedded.
4. Install anchor bolts to elevations required for proper attachment to supported equipment.

E. Seismic Bracing: Comply with requirements specified in Section 26 0548.16 "Seismic Controls for Electrical Systems."

F. Temporary Lifting Provisions: Remove temporary lifting eyes, channels, and brackets and temporary blocking of moving parts from enclosures and components.

G. Comply with NEMA ICS 15.

3.3 REMOTE ALARM AND LOW-SUCTION-SHUTDOWN PANEL INSTALLATION

A. Install panels on walls with tops not higher than 72 inches (1829 mm) above finished floor unless otherwise indicated. Bolt units to wall or mount on lightweight structural-steel channels bolted to wall. For ATS not on walls, provide freestanding racks complying with Section 26 0529 "Hangers and Supports for Electrical Systems."

3.4 POWER WIRING INSTALLATION

A. Install power wiring between controllers and their services or sources, and between controllers and their drivers. Comply with requirements in NFPA 20, NFPA 70, and Section 26 0519 "Low-Voltage Electrical Power Conductors and Cables."

3.5 CONTROL AND ALARM WIRING INSTALLATION

A. Install wiring between controllers and remote devices and facility's central monitoring system. Comply with requirements in NFPA 20, NFPA 70, and Section 26 0523 "Control-Voltage Electrical Power Cables."

B. Install wiring between remote alarm and low-suction-shutdown panels and controllers. Comply with requirements in NFPA 20, NFPA 70, and Section 26 0523 "Control-Voltage Electrical Power Cables."

C. Install wiring between controllers and the building's fire-alarm system. Comply with requirements specified in Section 28 3111 "Digital, Addressable Fire-Alarm System."

D. Bundle, train, and support wiring in enclosures.

E. Connect remote manual and automatic activation devices where applicable.

3.6 IDENTIFICATION

A. Comply with requirements in NFPA 20 for marking fire-pump controllers.

B. Identify system components, wiring, cabling, and terminals. Comply with requirements for identification in NFPA 20 and as specified in Section 26 0553 "Identification for Electrical Systems."

3.7 FIELD QUALITY CONTROL

A. Testing Agency: Engage a qualified testing agency to perform tests and inspections.

B. Manufacturer's Field Service: Engage a factory-authorized service representative to inspect, test, and adjust components, assemblies, and equipment installations, including connections.

C. Perform tests and inspections.

1. Manufacturer's Field Service: Engage a factory-authorized service representative to inspect components, assemblies, and equipment installations, including connections, and to assist in testing.

D. Acceptance Testing Preparation:

1. Inspect and Test Each Component:

a. Inspect wiring, components, connections, and equipment installations. Test and adjust components and equipment.
b. Test insulation resistance for each element, component, connecting supply, feeder, and control circuits.
c. Test continuity of each circuit.

2. Verify and Test Each Electric-Driver Controller:

a. Verify that voltages at controller locations are within plus 10 or minus 1 percent of motor nameplate rated voltages, with motors off. If outside this range for any motor, notify Construction Manager before starting the motor(s).
b. Test each motor for proper phase rotation.

3. Operational Test: After electrical circuitry has been energized, start units to confirm proper unit operation.
4. Test and adjust controls and safeties. Replace damaged and malfunctioning controls and equipment.

E. Field Acceptance Tests:

1. Do not begin field acceptance testing until suction piping has been flushed and hydrostatically tested and the certificate for flushing and testing has been submitted to Construction Manager and authorities having jurisdiction.
2. Prior to starting, notify authorities having jurisdiction of the time and place of the acceptance testing.
3. Engage manufacturer's factory-authorized service representative to be present during the testing.
4. Perform field acceptance tests as outlined in NFPA 20.

F. Controllers will be considered defective if they do not pass tests and inspections.

G. Prepare test and inspection reports.

3.8 STARTUP SERVICE

A. Engage a factory-authorized service representative to perform startup service.

1. Complete installation and startup checks according to manufacturer's written instructions.

3.9 ADJUSTING

A. Adjust controllers and battery charger systems to function smoothly and as recommended by manufacturer.

B. Set field-adjustable switches, auxiliary relays, time-delay relays, and timers.

C. Program microprocessors for required operational sequences, status indications, alarms, event recording, and display features. Clear events memory after final acceptance testing and prior to Substantial Completion.

D. Set field-adjustable pressure switches.

3.10 PROTECTION

A. Temporary Heating: Apply temporary heat to maintain temperature according to manufacturer's written instructions until enclosed controllers are ready to be energized and placed into service.

B. Replace controllers whose interiors have been exposed to water or other liquids prior to Substantial Completion.

3.11 DEMONSTRATION

A. Engage a factory-authorized service representative to train Owner's maintenance personnel to adjust, operate, and maintain controllers, remote alarm panels, low-suction-shutdown panels, and to use and reprogram microprocessor-based controls within this equipment.

END OF SECTION

SECTION 22 0513

COMMON MOTOR REQUIREMENTS FOR PLUMBING EQUIPMENT

PART 1 - GENERAL

1.1 RELATED DOCUMENTS

A. Drawings and general provisions of the Contract, including General and Supplementary Conditions and Division 01 Specification Sections, apply to this Section.

1.2 SUMMARY

A. Section includes general requirements for single-phase and polyphase, general-purpose, horizontal, small and medium, squirrel-cage induction motors for use on ac power systems up to 600 V and installed at equipment manufacturer's factory or shipped separately by equipment manufacturer for field installation.

1.3 COORDINATION

A. Coordinate features of motors, installed units, and accessory devices to be compatible with the following:

1. Motor controllers.
2. Torque, speed, and horsepower requirements of the load.
3. Ratings and characteristics of supply circuit and required control sequence.
4. Ambient and environmental conditions of installation location.

PART 2 - PRODUCTS

2.1 GENERAL MOTOR REQUIREMENTS

A. Comply with NEMA MG 1 unless otherwise indicated.

B. Comply with IEEE 841 for severe-duty motors.

2.2 MOTOR CHARACTERISTICS

A. Duty: Continuous duty at ambient temperature of 40 deg C and at altitude of 3300 feet above sea level.

B. Capacity and Torque Characteristics: Sufficient to start, accelerate, and operate connected loads at designated speeds, at installed altitude and environment, with indicated operating sequence, and without exceeding nameplate ratings or considering service factor.

2.3 POLYPHASE MOTORS

A. Description: NEMA MG 1, Design B, medium induction motor.

B. Efficiency: Energy efficient, as defined in NEMA MG 1.

C. Service Factor: 1.15.

D. Multispeed Motors: Variable torque.

1. For motors with 2:1 speed ratio, consequent pole, single winding.
2. For motors with other than 2:1 speed ratio, separate winding for each speed.

E. Multispeed Motors: Separate winding for each speed.

F. Rotor: Random-wound, squirrel cage.

G. Bearings: Regreasable, shielded, antifriction ball bearings suitable for radial and thrust loading.

H. Temperature Rise: Match insulation rating.

I. Insulation: Class F

J. Code Letter Designation:

1. Motors 15 HP and Larger: NEMA starting Code F or Code G.
2. Motors Smaller than 15 HP: Manufacturer's standard starting characteristic.

K. Enclosure Material: Cast iron for motor frame sizes 324T and larger; rolled steel for motor frame sizes smaller than 324T.

2.4 POLYPHASE MOTORS WITH ADDITIONAL REQUIREMENTS

A. Motors Used with Reduced-Voltage and Multispeed Controllers: Match wiring connection requirements for controller with required motor leads. Provide terminals in motor terminal box, suited to control method.

B. Motors Used with Variable Frequency Controllers: Ratings, characteristics, and features coordinated with and approved by controller manufacturer.

1. Windings: Copper magnet wire with moisture-resistant insulation varnish, designed and tested to resist transient spikes, high frequencies, and short time rise pulses produced by pulse-width modulated inverters.
2. Energy- and Premium-Efficient Motors: Class B temperature rise; Class F insulation.
3. Inverter-Duty Motors: Class F temperature rise; Class H insulation.
4. Thermal Protection: Comply with NEMA MG 1 requirements for thermally protected motors.

C. Severe-Duty Motors: Comply with IEEE 841, with 1.15 minimum service factor.

2.5 SINGLE-PHASE MOTORS

A. Motors larger than 1/20 hp shall be one of the following, to suit starting torque and requirements of specific motor application:

1. Permanent-split capacitor.
2. Split phase.
3. Capacitor start, inductor run.
4. Capacitor start, capacitor run.

B. Multispeed Motors: Variable-torque, permanent-split-capacitor type.

C. Bearings: Prelubricated, antifriction ball bearings or sleeve bearings suitable for radial and thrust loading.

D. Motors 1/20 HP and Smaller: Shaded-pole type.

E. Thermal Protection: Internal protection to automatically open power supply circuit to motor when winding temperature exceeds a safe value calibrated to temperature rating of motor insulation. Thermal-protection device shall automatically reset when motor temperature returns to normal range.

PART 3 - EXECUTION (Not Applicable)

END OF SECTION

SECTION 22 0516

EXPANSION FITTINGS AND LOOPS FOR PLUMBING PIPING

PART 1 - GENERAL

1.1 RELATED DOCUMENTS

A. Drawings and general provisions of the Contract, including General and Supplementary Conditions and Division 01 Specification Sections, apply to this Section.

1.2 SUMMARY

A. Section Includes:

1. Rubber union connector packless expansion joints.
2. Flexible-hose packless expansion joints.
3. Metal-bellows packless expansion joints.
4. Externally pressurized metal-bellows packless expansion joints.
5. Rubber packless expansion joints.
6. Grooved-joint expansion joints.
7. Alignment guides and anchors.
8. Pipe loops and swing connections.

1.3 ACTION SUBMITTALS

A. Product Data: For each type of product.

B. Delegated-Design Submittal: For each anchor and alignment guide, including analysis data, signed and sealed by the qualified professional engineer responsible for their preparation.

1. Design Calculations: Calculate requirements for thermal expansion of piping systems and for selecting and designing expansion joints, loops, and swing connections.
2. Anchor Details: Detail fabrication of each anchor indicated. Show dimensions and methods of assembly and attachment to building structure.
3. Alignment Guide Details: Detail field assembly and attachment to building structure.
4. Schedule: Indicate type, manufacturer's number, size, material, pressure rating, end connections, and location for each expansion joint.

1.4 INFORMATIONAL SUBMITTALS

A. Welding certificates.

1.5 CLOSEOUT SUBMITTALS

A. Maintenance Data: For expansion joints to include in maintenance manuals.

1.6 QUALITY ASSURANCE

A. Welding Qualifications: Qualify procedures and personnel according to AWS D1.1/D1.1M, "Structural Welding Code - Steel."

B. Pipe and Pressure-Vessel Welding Qualifications: Qualify procedures and operators according to ASME Boiler and Pressure Vessel Code.

PART 2 - PRODUCTS

2.1 PERFORMANCE REQUIREMENTS

A. Compatibility: Products shall be suitable for piping service fluids, materials, working pressures, and temperatures.

B. Capability: Products to absorb 200 percent of maximum axial movement between anchors.

2.2 PACKLESS EXPANSION JOINTS

A. Rubber Union Connector Expansion Joints:

1. Manufacturers: Subject to compliance with requirements, provide products by one of the following:

    a. Flex-Hose Co., Inc.
    b. Flexicraft Industries.
    c. Mason Industries, Inc.

2. Material: Twin reinforced-rubber spheres with external restraining cables.
3. Minimum Pressure Rating: 150 psig at 170 deg F, unless otherwise indicated.
4. End Connections for NPS 2 and Smaller: Threaded.

B. Flexible-Hose Packless Expansion Joints FHEJ-01:

1. Manufacturers: Subject to compliance with requirements, provide products by one of the following:

    a. Flex-Hose Co., Inc.
    b. Flexicraft Industries.
    c. Mason Industries, Inc.

2. Description: Manufactured assembly with inlet and outlet elbow fittings and two flexible-metal-hose legs joined by long-radius, 180-degree return bend or center section of flexible hose.
3. Flexible Hose: Corrugated-metal inner hoses and braided outer sheaths.
4. Expansion Joints for Copper Tubing NPS 2 and Smaller: Copper-alloy fittings with solder-joint end connections.

    a. Bronze hoses and single-braid bronze sheaths with 450 psig at 70 deg F and 340 psig at 450 deg F ratings.
    b. Bronze hoses and double-braid bronze sheaths with 700 psig at 70 deg F and 500 psig at 450 deg F ratings.

5. Expansion Joints for Copper Tubing NPS 2-1/2 to NPS 4: Copper-alloy fittings with threaded end connections.

    a. Stainless-steel hoses and single-braid, stainless-steel sheaths with 300 psig at 70 deg F and 225 psig at 450 deg F ratings.
    b. Stainless-steel hoses and double-braid, stainless-steel sheaths with 420 psig at 70 deg F and 315 psig at 450 deg F ratings.

6. Expansion Joints for Steel Piping NPS 2 and Smaller: Carbon-steel fittings with threaded end connections.

    a. Stainless-steel hoses and single-braid, stainless-steel sheaths with 450 psig at 70 deg F and 325 psig at 600 deg F ratings.
    b. Stainless-steel hoses and double-braid, stainless-steel sheaths with 700 psig at 70 deg F and 515 psig at 600 deg F ratings.

7. Expansion Joints for Steel Piping NPS 2-1/2 to NPS 6: Carbon-steel fittings with flanged end connections.

    a. Stainless-steel hoses and single-braid, stainless-steel sheaths with 200 psig at 70 deg F and 145 psig at 600 deg F ratings.
    b. Stainless-steel hoses and double-braid, stainless-steel sheaths with 275 psig at 70 deg F and 200 psig at 600 deg F ratings.

8. Expansion Joints for Steel Piping NPS 8 to NPS 12: Carbon-steel fittings with flanged end connections.

    a. Stainless-steel hoses and single-braid, stainless-steel sheaths with 125 psig at 70 deg F and 90 psig at 600 deg F ratings.
    b. Stainless-steel hoses and double-braid, stainless-steel sheaths with 165 psig at 70 deg F and 120 psig at 600 deg F ratings.

9. Expansion Joints for Steel Piping NPS 14 and Larger: Carbon-steel fittings with flanged end connections.

    a. Stainless-steel hoses and double-braid, stainless-steel sheaths with 165 psig at 70 deg F and 120 psig at 600 deg F ratings.

C. Metal-Bellows Packless Expansion Joints:

1. Manufacturers: Subject to compliance with requirements, provide products by one of the following:

    a. Flex-Hose Co., Inc.
    b. Mason Industries, Inc.
    c. Metraflex Company (The).
2. Standards: ASTM F 1120 and EJMA's "Standards of the Expansion Joint Manufacturers Association, Inc."
3. Type: Circular, corrugated bellows with external tie rods.
4. Minimum Pressure Rating: 200 psig, unless otherwise indicated.
5. Configuration: double joint with base class(es), unless otherwise indicated.
6. Expansion Joints for Copper Tubing: multi- ply phosphor-bronze bellows, copper pipe ends, and brass shrouds.

    a. End Connections for Copper Tubing NPS 2 and Smaller: threaded.

b. End Connections for Copper Tubing NPS 2-1/2 to NPS 4: threaded.
c. End Connections for Copper Tubing NPS 5 and Larger: Flanged.

7. Expansion Joints for Steel Piping: multi- ply stainless-steel bellows, steel pipe ends, and carbon-steel shroud.

a. End Connections for Steel Pipe NPS 2 and Smaller: Threaded.
b. End Connections for Steel Pipe NPS 2-1/2 and Larger: Flanged.

D. Externally Pressurized Metal-Bellows Packless Expansion Joints:

1. Manufacturers: Subject to compliance with requirements, provide products by one of the following:

a. Flex-Hose Co., Inc.
b. Mason Industries, Inc.
c. Metraflex Company (The).

2. Minimum Pressure Rating: 300 psig, unless otherwise indicated.
3. Description:

a. Totally enclosed, externally pressurized, multi-ply, stainless-steel bellows isolated from fluid flow by an internal pipe sleeve.
b. Carbon-steel housing.
c. Drain plugs and lifting lug for NPS 3 and larger.
d. Bellows shall have operating clearance between the internal pipe sleeves and the external shrouds.
e. Joints shall be supplied with a built-in scale to confirm the starting position and operating movement.
f. Joint Axial Movement: 4 inches of compression and 0.75 inch of extension.

4. Permanent Locking Bolts: Set locking bolts to maintain joint lengths during installation. Temporary welding tabs that are removed after installation in lieu of locking bolts are not acceptable.
5. End Connection Configuration: Flanged; one raised, fixed and one floating flange.

E. Rubber Packless Expansion Joints:

1. Manufacturers: Subject to compliance with requirements, provide products by one of the following:

a. Flex-Hose Co., Inc.
b. Mason Industries, Inc.
c. Metraflex Company (The).

2. Standards: ASTM F 1123 and FSA's "Technical Handbook: Non-Metallic Expansion Joints and Flexible Pipe Connectors."
3. Material: Fabric-reinforced rubber complying with FSA-PSJ-703.
4. Arch Type: multiple arches with external control rods.
5. Spherical Type: multiple spheres with external control rods.
6. Minimum Pressure Rating for NPS 1-1/2 to NPS 4: 150 psig at 220 deg F.
7. Minimum Pressure Rating for NPS 5 and NPS 6: 140 psig at 200 deg F.
8. Minimum Pressure Rating for NPS 8 to NPS 12: 140 psig at 180 deg F.
9. Material for Fluids Containing Acids, Alkalis, or Chemicals: Chlorosulfonyl-polyethylene rubber.
10. Material for Fluids Containing Gas, Hydrocarbons, or Oil: Chlorosulfonated polyethylene

synthetic rubber.
11. Material for Water: Chlorosulfonated polyethylene synthetic rubber.
12. End Connections: Full-faced, integral steel flanges with steel retaining rings.

2.3 GROOVED-JOINT EXPANSION JOINTS

1. Manufacturers: Subject to compliance with requirements, provide products by one of the following:

    a. Flex-Hose Co., Inc.
    b. Mason Industries, Inc.
    c. Metraflex Company (The).

B. Description: Factory-assembled expansion joint made of several grooved-end pipe nipples, couplings, and grooved joints.

C. Standard: AWWA C606, for grooved joints.

D. Nipples: Galvanized, ASTM A 53/A 53M, Schedule 40, Type E or S, steel pipe with grooved ends.

E. Couplings: 12, flexible type for steel-pipe dimensions. Include ferrous housing sections, ethylene-propylene-diene terpolymer rubber gasket suitable for cold and hot water, and bolts and nuts.

2.4 ALIGNMENT GUIDES AND ANCHORS

A. Alignment Guides:

1. Manufacturers: Subject to compliance with requirements, provide products by one of the following:

    a. Flex-Hose Co., Inc.
    b. Mason Industries, Inc.
    c. Metraflex Company (The).

2. Description: Steel, factory-fabricated alignment guide, with bolted two-section outer cylinder and base for attaching to structure; with two-section guiding slider for bolting to pipe.

B. Anchor Materials:

1. Steel Shapes and Plates: ASTM A 36/A 36M.
2. Bolts and Nuts: ASME B18.10 or ASTM A 183, steel hex head.
3. Washers: ASTM F 844, steel, plain, flat washers.
4. Mechanical Fasteners: Insert-wedge-type stud with expansion plug anchor for use in hardened portland cement concrete, with tension and shear capacities appropriate for application.

    a. Stud: Threaded, zinc-coated carbon steel.
    b. Expansion Plug: Zinc-coated steel.
    c. Washer and Nut: Zinc-coated steel.

5. Chemical Fasteners: Insert-type stud, bonding-system anchor for use with hardened portland cement concrete, with tension and shear capacities appropriate for application.

    a. Bonding Material: ASTM C 881/C 881M, Type IV, Grade 3, two-component epoxy resin suitable for surface temperature of hardened concrete where fastener is to be installed.
    b. Stud: ASTM A 307, zinc-coated carbon steel with continuous thread on stud, unless otherwise indicated.
    c. Washer and Nut: Zinc-coated steel.

PART 3 - EXECUTION

3.1 EXPANSION JOINT INSTALLATION

A. Install expansion joints of sizes matching sizes of piping in which they are installed.

B. Install metal-bellows expansion joints according to EJMA's "Standards of the Expansion Joint Manufacturers Association, Inc."

C. Install rubber packless expansion joints according to FSA-PSJ-703.

D. Install grooved-joint expansion joints to grooved-end steel piping.

3.2 PIPE LOOP AND SWING CONNECTION INSTALLATION

A. Install pipe loops cold-sprung in tension or compression as required to partly absorb tension or compression produced during anticipated change in temperature.

B. Connect risers and branch connections to mains with at least five pipe fittings, including tee in main.

C. Connect risers and branch connections to terminal units with at least four pipe fittings, including tee in riser.

D. Connect mains and branch connections to terminal units with at least four pipe fittings, including tee in main.

3.3 ALIGNMENT-GUIDE AND ANCHOR INSTALLATION

A. Install alignment guides to guide expansion and to avoid end-loading and torsional stress.

B. Install two guide(s) on each side of pipe expansion fittings and loops. Install guides nearest to expansion joint not more than four pipe diameters from expansion joint.

C. Attach guides to pipe, and secure guides to building structure.

D. Install anchors at locations to prevent stresses from exceeding those permitted by ASME B31.9 and to prevent transfer of loading and stresses to connected equipment.

E. Anchor Attachments:

1. Anchor Attachment to Steel Pipe: Attach by welding. Comply with ASME B31.9 and ASME Boiler and Pressure Vessel Code: Section IX, "Welding and Brazing Qualifications."
2. Anchor Attachment to Copper Tubing: Attach with pipe hangers. Use MSS SP-69, Type 24; U bolts bolted to anchor.

F. Fabricate and install steel anchors by welding steel shapes, plates, and bars. Comply with ASME B31.9 and AWS D1.1/D1.1M.

1. Anchor Attachment to Steel Structural Members: Attach by welding.
2. Anchor Attachment to Concrete Structural Members: Attach by fasteners. Follow fastener manufacturer's written instructions.

G. Use grout to form flat bearing surfaces for guides and anchors attached to concrete.

END OF SECTION

SECTION 22 0517

SLEEVES AND SLEEVE SEALS FOR PLUMBING PIPING

PART 1 - GENERAL

1.1 RELATED DOCUMENTS

A. Drawings and general provisions of the Contract, including General and Supplementary Conditions and Division 01 Specification Sections, apply to this Section.

1.2 SUMMARY

A. Section Includes:

1. Sleeves.
2. Stack-sleeve fittings.
3. Sleeve-seal systems.
4. Sleeve-seal fittings.
5. Grout.

1.3 ACTION SUBMITTALS

A. Product Data: For each type of product indicated.

PART 2 - PRODUCTS

2.1 SLEEVES

A. Cast-Iron Wall Pipes: Cast or fabricated of cast or ductile iron and equivalent to ductile-iron pressure pipe, with plain ends and integral waterstop unless otherwise indicated.

B. Galvanized-Steel Wall Pipes: ASTM A 53/A 53M, Schedule 40, with plain ends and welded steel collar; zinc coated.

C. Galvanized-Steel-Pipe Sleeves: ASTM A 53/A 53M, Type E, Grade B, Schedule 40, zinc coated, with plain ends.

D. PVC-Pipe Sleeves: ASTM D 1785, Schedule 40.

E. Galvanized-Steel-Sheet Sleeves: 0.0239-inch minimum thickness; round tube closed with welded longitudinal joint.

F. Molded-PE or -PP Sleeves: Removable, tapered-cup shaped, and smooth outer surface with nailing flange for attaching to wooden forms.

G. Molded-PVC Sleeves: With nailing flange for attaching to wooden forms.

2.2 STACK-SLEEVE FITTINGS

A. Description: Manufactured, cast-iron sleeve with integral clamping flange. Include clamping ring, bolts, and nuts for membrane flashing.

1. Underdeck Clamp: Clamping ring with setscrews.

2.3 SLEEVE-SEAL SYSTEMS

A. Description: Modular sealing-element unit, designed for field assembly, for filling annular space between piping and sleeve.

1. Sealing Elements: EPDM-rubber interlocking links shaped to fit surface of pipe. Include type and number required for pipe material and size of pipe.
2. Pressure Plates: Carbon steel.
3. Connecting Bolts and Nuts: Carbon steel, with corrosion-resistant coating of length required to secure pressure plates to sealing elements.

2.4 SLEEVE-SEAL FITTINGS

A. Description: Manufactured plastic, sleeve-type, waterstop assembly made for imbedding in concrete slab or wall. Unit has plastic or rubber waterstop collar with center opening to match piping OD.

2.5 GROUT

A. Standard: ASTM C 1107/C 1107M, Grade B, post-hardening and volume-adjusting, dry, hydraulic-cement grout.

B. Characteristics: Nonshrink; recommended for interior and exterior applications.

C. Design Mix: 5000-psi, 28-day compressive strength.

D. Packaging: Premixed and factory packaged.

PART 3 - EXECUTION

3.1 SLEEVE INSTALLATION

A. Install sleeves for piping passing through penetrations in floors, partitions, roofs, and walls.

B. For sleeves that will have sleeve-seal system installed, select sleeves of size large enough to provide 1-inch annular clear space between piping and concrete slabs and walls.

1. Sleeves are not required for core-drilled holes.

C. Install sleeves in concrete floors, concrete roof slabs, and concrete walls as new slabs and walls are constructed.

1. Permanent sleeves are not required for holes in slabs formed by molded-PE or -PP sleeves.
2. Cut sleeves to length for mounting flush with both surfaces.

    a. Exception: Extend sleeves installed in floors of mechanical equipment areas or other wet areas 2 inches above finished floor level.

3. Using grout, seal the space outside of sleeves in slabs and walls without sleeve-seal system.

D. Install sleeves for pipes passing through interior partitions.

1. Cut sleeves to length for mounting flush with both surfaces.
2. Install sleeves that are large enough to provide 1/4-inch annular clear space between sleeve and pipe or pipe insulation.
3. Seal annular space between sleeve and piping or piping insulation; use joint sealants appropriate for size, depth, and location of joint. Comply with requirements for sealants specified in Section 07 9200 "Joint Sealants."

E. Fire-Barrier Penetrations: Maintain indicated fire rating of walls, partitions, ceilings, and floors at pipe penetrations. Seal pipe penetrations with firestop materials. Comply with requirements for firestopping specified in Section 07 8413 "Penetration Firestopping."

3.2 STACK-SLEEVE-FITTING INSTALLATION

A. Install stack-sleeve fittings in new slabs as slabs are constructed.

1. Install fittings that are large enough to provide 1/4-inch annular clear space between sleeve and pipe or pipe insulation.
2. Secure flashing between clamping flanges for pipes penetrating floors with membrane waterproofing. Comply with requirements for flashing specified in Section 07 6200 "Sheet Metal Flashing and Trim."
3. Install section of cast-iron soil pipe to extend sleeve to 2 inches above finished floor level.
4. Extend cast-iron sleeve fittings below floor slab as required to secure clamping ring if ring is specified.
5. Using grout, seal the space around outside of stack-sleeve fittings.

B. Fire-Barrier Penetrations: Maintain indicated fire rating of floors at pipe penetrations. Seal pipe penetrations with firestop materials. Comply with requirements for firestopping specified in Section 07 8413 "Penetration Firestopping."

3.3 SLEEVE-SEAL-SYSTEM INSTALLATION

A. Install sleeve-seal systems in sleeves in exterior concrete walls and slabs-on-grade at service piping entries into building.

B. Select type, size, and number of sealing elements required for piping material and size and for sleeve ID or hole size. Position piping in center of sleeve. Center piping in penetration, assemble sleeve-seal system components, and install in annular space between piping and sleeve. Tighten bolts against pressure plates that cause sealing elements to expand and make a watertight seal.

3.4 SLEEVE-SEAL-FITTING INSTALLATION

A. Install sleeve-seal fittings in new walls and slabs as they are constructed.

B. Assemble fitting components of length to be flush with both surfaces of concrete slabs and walls. Position waterstop flange to be centered in concrete slab or wall.

C. Secure nailing flanges to concrete forms.

D. Using grout, seal the space around outside of sleeve-seal fittings.

3.5 SLEEVE AND SLEEVE-SEAL SCHEDULE

A. Use sleeves and sleeve seals for the following piping-penetration applications:

1. Exterior Concrete Walls above Grade:
   a. Galvanized-steel wall sleeves

2. Exterior Concrete Walls below Grade:

   a. Galvanized-steel-pipe sleeves with sleeve-seal system

      1) Select sleeve size to allow for 1-inch annular clear space between piping and sleeve for installing sleeve-seal system.

3. Concrete Slabs-on-Grade:

   a. Galvanized-steel wall sleeves with sleeve-seal system.

      1) Select sleeve size to allow for 1-inch annular clear space between piping and sleeve for installing sleeve-seal system.

4. Concrete Slabs above Grade:
   a. Galvanized-steel-pipe sleeves.

5. Interior Partitions:
   a. Galvanized-steel-sheet sleeves.

END OF SECTION

SECTION 22 0518

ESCUTCHEONS FOR PLUMBING PIPING

PART 1 - GENERAL

1.1 RELATED DOCUMENTS

A. Drawings and general provisions of the Contract, including General and Supplementary Conditions and Division 01 Specification Sections, apply to this Section.

1.2 SUMMARY

A. Section Includes:

1. Escutcheons.
2. Floor plates.

1.3 ACTION SUBMITTALS

A. Product Data: For each type of product indicated.

PART 2 - PRODUCTS

2.1 ESCUTCHEONS

A. One-Piece, Cast-Brass Type: With polished, chrome-plate finish and setscrew fastener.

B. One-Piece, Deep-Pattern Type: Deep-drawn, box-shaped brass with chrome-plated finish and spring-clip fasteners.

C. One-Piece, Stamped-Steel Type: With chrome-plated finish and spring-clip fasteners.

D. Split-Casting Brass Type: With polished, chrome-plated finish and with concealed hinge and setscrew.

E. Split-Plate, Stamped-Steel Type: With chrome-plated finish, concealed hinge, and spring-clip fasteners.

2.2 FLOOR PLATES

A. One-Piece Floor Plates: Cast-iron flange with holes for fasteners.

B. Split-Casting Floor Plates: Cast brass with concealed hinge.

PART 3 - EXECUTION

3.1 INSTALLATION

A. Install escutcheons for piping penetrations of walls, ceilings, and finished floors.

B. Install escutcheons with ID to closely fit around pipe, tube, and insulation of insulated piping and with OD that completely covers opening.

1. Escutcheons for New Piping:

a. Piping with Fitting or Sleeve Protruding from Wall: One-piece, deep-pattern type.
b. Chrome-Plated Piping: One-piece, cast-brass type with polished, chrome-plated finish.
c. Insulated Piping: One-piece, stamped-steel type.
d. Bare Piping at Wall and Floor Penetrations in Finished Spaces: One-piece, cast-brass type with polished, chrome-plated finish.
e. Bare Piping at Wall and Floor Penetrations in Finished Spaces: One-piece, stamped-steel type.
f. Bare Piping at Ceiling Penetrations in Finished Spaces: One-piece, cast-brass type with polished, chrome-plated finish.
g. Bare Piping at Ceiling Penetrations in Finished Spaces: One-piece, stamped-steel type.
h. Bare Piping in Unfinished Service Spaces: One-piece, cast-brass finish.
i. Bare Piping in Unfinished Service Spaces: One-piece, stamped-steel type.
j. Bare Piping in Equipment Rooms: One-piece, cast-brass type with polished, chrome-plated finish.
k. Bare Piping in Equipment Rooms: One-piece, stamped-steel type.

2. Escutcheons for Existing Piping:

a. Chrome-Plated Piping: Split-casting brass type with polished, chrome-plated finish.
b. Insulated Piping: Split-plate, stamped-steel type with concealed hinge.
c. Bare Piping at Wall and Floor Penetrations in Finished Spaces: Split-casting brass type with polished, chrome-plated finish.
d. Bare Piping at Wall and Floor Penetrations in Finished Spaces: Split-plate, stamped-steel type with concealed hinge.
e. Bare Piping at Ceiling Penetrations in Finished Spaces: Split-casting brass type with polished, chrome-plated finish.
f. Bare Piping at Ceiling Penetrations in Finished Spaces: Split-plate, stamped-steel type with concealed hinge.
g. Bare Piping in Unfinished Service Spaces: Split-casting brass type with polished, chrome-plated finish.
h. Bare Piping in Unfinished Service Spaces: Split-plate, stamped-steel type with concealed hinge.
i. Bare Piping in Equipment Rooms: Split-casting brass type with polished, chrome-plated finish.
j. Bare Piping in Equipment Rooms: Split-plate, stamped-steel type with concealed hinge.

C. Install floor plates for piping penetrations of equipment-room floors.

D. Install floor plates with ID to closely fit around pipe, tube, and insulation of piping and with OD that completely covers opening.

1. New Piping: One-piece, floor-plate type.
2. Existing Piping: Split-casting, floor-plate type.

3.2 FIELD QUALITY CONTROL

A. Replace broken and damaged escutcheons and floor plates using new materials.

END OF SECTION

SECTION 22 0519

METERS AND GAGES FOR PLUMBING PIPING

PART 1 - GENERAL

1.1 RELATED DOCUMENTS

A. Drawings and general provisions of the Contract, including General and Supplementary Conditions and Division 01 Specification Sections, apply to this Section.

1.2 SUMMARY

A. Section Includes:

1. Bimetallic-actuated thermometers.
2. Filled-system thermometers.
3. Liquid-in-glass thermometers.
4. Light-activated thermometers.
5. Thermowells.
6. Dial-type pressure gages.
7. Gage attachments.
8. Test plugs.
9. Test-plug kits.
10. Sight flow indicators.

B. Related Requirements:

1. Section 22 1113 "Facility Water Distribution Piping" for domestic water meters and combined domestic and fire-protection water-service meters outside the building.
2. Section 22 1119 "Domestic Water Piping Specialties" for water meters.
3. Section 22 1513 "General-Service Compressed-Air Piping" for compressed air gages.

1.3 ACTION SUBMITTALS

A. Product Data: For each type of product.

1.4 INFORMATIONAL SUBMITTALS

A. Product Certificates: For each type of meter and gage.

1.5 CLOSEOUT SUBMITTALS

A. Operation and Maintenance Data: For meters and gages to include in operation and maintenance manuals.

PART 2 - PRODUCTS

2.1 BIMETALLIC-ACTUATED THERMOMETERS

A. Standard: ASME B40.200.

B. Case: Liquid-filled and sealed type(s); stainless steel with 3-inch 5-inch nominal diameter.

C. Dial: Nonreflective aluminum with permanently etched scale markings and scales in deg F and deg C.

D. Connector Type(s): Union joint, adjustable angle, with unified-inch screw threads.

E. Connector Size: 1/2 inch with ASME B1.1 screw threads.

F. Stem: 0.25 or 0.375 inch in diameter; stainless steel.

G. Window: Plain glass.

H. Ring: Stainless steel.

I. Element: Bimetal coil.

J. Pointer: Dark-colored metal.

K. Accuracy: Plus or minus 1 percent of scale range.

2.2 FILLED-SYSTEM THERMOMETERS

A. Direct-Mounted, Metal-Case, Vapor-Actuated Thermometers:
1. Standard: ASME B40.200.
2. Case: Sealed type, cast aluminum or drawn steel 4-1/2-inch nominal diameter.
3. Element: Bourdon tube or other type of pressure element.
4. Movement: Mechanical, with link to pressure element and connection to pointer.
5. Dial: Nonreflective aluminum with permanently etched scale markings graduated in deg F and deg C.
6. Pointer: Dark-colored metal.
7. Window: Glass.
8. Ring: Stainless steel.
9. Connector Type(s): Union joint, adjustable, 180 degrees in vertical plane, 360 degrees in horizontal plane, with locking device; with ASME B1.1 screw threads.
10. Thermal System: Liquid-filled bulb in copper-plated steel, aluminum, or brass stem and of length to suit installation.

    a. Design for Thermowell Installation: Bare stem.

11. Accuracy: Plus or minus 1 percent of scale range.

B. Direct-Mounted, Plastic-Case, Vapor-Actuated Thermometers:
1. Standard: ASME B40.200.
2. Case: Sealed type, plastic 4-1/2-inch nominal diameter.
3. Element: Bourdon tube or other type of pressure element.
4. Movement: Mechanical, with link to pressure element and connection to pointer.

5. Dial: Nonreflective aluminum with permanently etched scale markings graduated in deg F and deg C.
6. Pointer: Dark-colored metal.
7. Window: Glass.
8. Ring: Metal.
9. Connector Type(s): Union joint, adjustable, 180 degrees in vertical plane, 360 degrees in horizontal plane, with locking device with ASME B1.1 screw threads.
10. Thermal System: Liquid-filled bulb in copper-plated steel, aluminum, or brass stem and of length to suit installation.

    a. Design for Thermowell Installation: Bare stem.

11. Accuracy: Plus or minus 1 percent of scale range.

C. Remote-Mounted, Metal-Case, Vapor-Actuated Thermometers:
1. Standard: ASME B40.200.
2. Case: Sealed type, cast aluminum or drawn steel 4-1/2-inch nominal diameter with flange and holes for panel mounting.
3. Element: Bourdon tube or other type of pressure element.
4. Movement: Mechanical, with link to pressure element and connection to pointer.
5. Dial: Nonreflective aluminum with permanently etched scale markings graduated in deg F and deg C.
6. Pointer: Dark-colored metal.
7. Window: Glass.
8. Ring: Stainless steel.
9. Connector Type(s): Union joint, with ASME B1.1 screw threads.
10. Thermal System: Liquid-filled bulb in copper-plated steel, aluminum, or brass stem and of length to suit installation.

    a. Design for Thermowell Installation: Bare stem.

11. Accuracy: Plus or minus 1percent of scale range.

D. Remote-Mounted, Plastic-Case, Vapor-Actuated Thermometers:
1. Standard: ASME B40.200.
2. Case: Sealed type, plastic 4-1/2-inch nominal diameter with flange and holes for panel mounting.
3. Element: Bourdon tube or other type of pressure element.
4. Movement: Mechanical, with link to pressure element and connection to pointer.
5. Dial: Nonreflective aluminum with permanently etched scale markings graduated in deg F and deg C.
6. Pointer: Dark-colored metal.
7. Window: Glass.
8. Ring: Metal.
9. Connector Type(s): Union joint, threaded, with ASME B1.1 screw threads.
10. Thermal System: Liquid-filled bulb in copper-plated steel, aluminum, or brass stem and of length to suit installation.

    a. Design for Thermowell Installation: Bare stem.

11. Accuracy: Plus or minus 1 percent of scale range or one scale division, to a maximum of 1.5 percent of scale range.

2.3 LIQUID-IN-GLASS THERMOMETERS

A. Metal-Case, Compact-Style, Liquid-in-Glass Thermometers:
   1. Standard: ASME B40.200.
   2. Case: Cast aluminum; 6-inch nominal size.
   3. Case Form: Back angle unless otherwise indicated.
   4. Tube: Glass with magnifying lens and blue or red organic liquid.
   5. Tube Background: Nonreflective aluminum with permanently etched scale markings graduated in deg F and deg C.
   6. Window: Glass.
   7. Stem: Aluminum or brass and of length to suit installation.

      a. Design for Thermowell Installation: Bare stem.

   8. Connector: 3/4 inch, with ASME B1.1 screw threads.
   9. Accuracy: Plus or minus 1 percent of scale range or one scale division, to a maximum of 1.5 percent of scale range.

B. Plastic-Case, Compact-Style, Liquid-in-Glass Thermometers:
   1. Standard: ASME B40.200.
   2. Case: Plastic;6-inch nominal size.
   3. Case Form: Back angle unless otherwise indicated.
   4. Tube: Glass with magnifying lens and blue or red organic liquid.
   5. Tube Background: Nonreflective with permanently etched scale markings graduated in deg F and deg C.
   6. Window: Glass or plastic.
   7. Stem: Aluminum or brass and of length to suit installation.

      a. Design for Thermowell Installation: Bare stem.

   8. Connector: 3/4 inch with ASME B1.1 screw threads.
   9. Accuracy: Plus or minus 1 percent of scale range or one scale division, to a maximum of 1.5 percent of scale range.

C. Metal-Case, Industrial-Style, Liquid-in-Glass Thermometers:
   1. Standard: ASME B40.200.
   2. Case: Cast aluminum 7-inch nominal size unless otherwise indicated.
   3. Case Form: Adjustable angle unless otherwise indicated.
   4. Tube: Glass with magnifying lens and blue or red organic liquid.
   5. Tube Background: Nonreflective aluminum with permanently etched scale markings graduated in deg F and deg C.
   6. Window: Glass.
   7. Stem: Aluminum and of length to suit installation.

      a. Design for Thermowell Installation: Bare stem.

   8. Connector: 1-1/4 inches with ASME B1.1 screw threads.
   9. Accuracy: Plus or minus 1 percent of scale range or one scale division, to a maximum of 1.5 percent of scale range.

D. Plastic-Case, Industrial-Style, Liquid-in-Glass Thermometers:
   1. Standard: ASME B40.200.
   2. Case: Plastic 7-inch nominal size unless otherwise indicated.
   3. Case Form: Adjustable angle unless otherwise indicated.
   4. Tube: Glass with magnifying lens and blue or red organic liquid.

5. Tube Background: Nonreflective aluminum with permanently etched scale markings graduated in deg F and deg C.
6. Window: Glass.
7. Stem: Stainless steel and of length to suit installation.

    a. Design for Thermowell Installation: Bare stem.

8. Connector: 1-1/4 inches with ASME B1.1 screw threads.
9. Accuracy: Plus or minus 1 percent of scale range or one scale division, to a maximum of 1.5 percent of scale range.

2.4 LIGHT-ACTIVATED THERMOMETERS

A. Direct-Mounted, Light-Activated Thermometers:
1. Case: Metal 7-inch nominal size unless otherwise indicated.
2. Scale(s): Deg F and deg C.
3. Case Form: Adjustable angle
4. Connector: 1-1/4 inches, with ASME B1.1 screw threads.
5. Stem: Aluminum and of length to suit installation.

    a. Design for Thermowell Installation: Bare stem.

6. Display: Digital.
7. Accuracy: Plus or minus 2 deg F.

B. Remote-Mounted, Light-Activated Thermometers:
1. Case: Plastic, for wall mounting.
2. Scale(s): Deg F and deg C.
3. Sensor: Bulb and thermister wire.

    a. Design for Thermowell Installation: Bare stem.

4. Display: Digital.
5. Accuracy: Plus or minus 2 deg F.

2.5 THERMOWELLS

A. Thermowells:

1. Standard: ASME B40.200.
2. Description: Pressure-tight, socket-type fitting made for insertion into piping tee fitting.
3. Material for Use with Copper Tubing: CNR or CUNI.
4. Material for Use with Steel Piping: CRES CSA.
5. Type: Stepped shank unless straight or tapered shank is indicated.
6. External Threads: NPS 1/2, NPS 3/4, or NPS 1, ASME B1.20.1 pipe threads.
7. Internal Threads: 1/2, 3/4, and 1 inch, with ASME B1.1 screw threads.
8. Bore: Diameter required to match thermometer bulb or stem.
9. Insertion Length: Length required to match thermometer bulb or stem.
10. Lagging Extension: Include on thermowells for insulated piping and tubing.
11. Bushings: For converting size of thermowell's internal screw thread to size of thermometer connection.

B. Heat-Transfer Medium: Mixture of graphite and glycerin.

2.6 PRESSURE GAGES

A. Direct-Mounted, Metal-Case, Dial-Type Pressure Gages:
   1. Standard: ASME B40.100.
   2. Case: Liquid-filled or Sealed; cast aluminum or drawn steel; 4-1/2-inch nominal diameter.
   3. Pressure-Element Assembly: Bourdon tube unless otherwise indicated.
   4. Pressure Connection: Brass, with NPS 1/4 or NPS 1/2, ASME B1.20.1 pipe threads and bottom-outlet type unless back-outlet type is indicated.
   5. Movement: Mechanical, with link to pressure element and connection to pointer.
   6. Dial: Nonreflective aluminum with permanently etched scale markings graduated in psi and kPa.
   7. Pointer: Dark-colored metal.
   8. Window: Glass.
   9. Ring: Stainless steel.
   10. Accuracy: plus or minus 2 percent of middle half of scale range.

B. Direct-Mounted, Plastic-Case, Dial-Type Pressure Gages:
   1. Standard: ASME B40.100.
   2. Case: Sealed type; plastic; 4-1/2-inch nominal diameter.
   3. Pressure-Element Assembly: Bourdon tube unless otherwise indicated.
   4. Pressure Connection: Brass, with NPS 1/4 or NPS 1/2, ASME B1.20.1 pipe threads and bottom-outlet type unless back-outlet type is indicated.
   5. Movement: Mechanical, with link to pressure element and connection to pointer.
   6. Dial: Nonreflective aluminum with permanently etched scale markings graduated in psi and kPa.
   7. Pointer: Dark-colored metal.
   8. Window: Glass.
   9. Accuracy: plus or minus 2 percent of middle half of scale range.

C. Remote-Mounted, Metal-Case, Dial-Type Pressure Gages:
   1. Standard: ASME B40.100.
   2. Case: Liquid-filled or Sealed type; cast aluminum or drawn steel; 4-1/2-inch nominal diameter with flange and holes for panel mounting.
   3. Pressure-Element Assembly: Bourdon tube unless otherwise indicated.
   4. Pressure Connection: Brass, with NPS 1/4 or NPS 1/2, ASME B1.20.1 pipe threads and bottom-outlet type unless back-outlet type is indicated.
   5. Movement: Mechanical, with link to pressure element and connection to pointer.
   6. Dial: Nonreflective aluminum with permanently etched scale markings graduated in psi and kPa.
   7. Pointer: Dark-colored metal.
   8. Window: Glass.
   9. Ring: Stainless steel.
   10. Accuracy: plus or minus 2 percent of middle half of scale range.

D. Remote-Mounted, Plastic-Case, Dial-Type Pressure Gages:
   1. Standard: ASME B40.100.
   2. Case: Sealed type; plastic; 4-1/2-inch nominal diameter with flange and holes for panel mounting.
   3. Pressure-Element Assembly: Bourdon tube unless otherwise indicated.
   4. Pressure Connection: Brass, with NPS 1/4 or NPS 1/2, ASME B1.20.1 pipe threads and bottom-outlet type unless back-outlet type is indicated.
   5. Movement: Mechanical, with link to pressure element and connection to pointer.
   6. Dial: Nonreflective aluminum with permanently etched scale markings graduated in psi and kPa.
   7. Pointer: Dark-colored metal.
   8. Window: Glass.

9. Accuracy: plus or minus 2 percent of middle half of scale range.

2.7 GAGE ATTACHMENTS

A. Snubbers: ASME B40.100, brass; with NPS 1/4 or NPS 1/2, ASME B1.20.1 pipe threads and surge-dampening device. Include extension for use on insulated piping.

B. Valves: Brass ball, with NPS 1/4 or NPS 1/2 ASME B1.20.1 pipe threads.

2.8 TEST PLUGS

A. Description: Test-station fitting made for insertion into piping tee fitting.

B. Body: Brass or stainless steel with core inserts and gasketed and threaded cap. Include extended stem on units to be installed in insulated piping.

C. Thread Size: NPS 1/4 or NPS 1/2 ASME B1.20.1 pipe thread.

D. Minimum Pressure and Temperature Rating: 500 psig at 200 deg F.

E. Core Inserts: Chlorosulfonated polyethylene synthetic and EPDM self-sealing rubber.

2.9 TEST-PLUG KITS

A. Furnish one test-plug kit(s) containing one thermometer(s), one pressure gage and adapter, and carrying case. Thermometer sensing elements, pressure gage, and adapter probes shall be of diameter to fit test plugs and of length to project into piping.

B. Low-Range Thermometer: Small, bimetallic insertion type with 1- to 2-inch diameter dial and tapered-end sensing element. Dial range shall be at least 25 to 125 deg F.

C. High-Range Thermometer: Small, bimetallic insertion type with 1- to 2-inch diameter dial and tapered-end sensing element. Dial range shall be at least 0 to 220 deg F.

D. Pressure Gage: Small, Bourdon-tube insertion type with 2- to 3-inch diameter dial and probe. Dial range shall be at least 0 to 200 psig.

E. Carrying Case: Metal or plastic, with formed instrument padding.

2.10 SIGHT FLOW INDICATORS

A. Description: Piping inline-installation device for visual verification of flow.

B. Construction: Bronze or stainless-steel body, with sight glass and ball, flapper, or paddle wheel indicator, and threaded or flanged ends.

C. Minimum Pressure Rating: 150 psig.

D. Minimum Temperature Rating: 200 deg F.

E. End Connections for NPS 2 and Smaller: Threaded.

F. End Connections for NPS 2-1/2 and Larger: Flanged.

PART 3 - EXECUTION

3.1 INSTALLATION

A. Install thermowells with socket extending to center of pipe and in vertical position in piping tees.

B. Install thermowells of sizes required to match thermometer connectors. Include bushings if required to match sizes.

C. Install thermowells with extension on insulated piping.

D. Fill thermowells with heat-transfer medium.

E. Install direct-mounted thermometers in thermowells and adjust vertical and tilted positions.

F. Install remote-mounted thermometer bulbs in thermowells and install cases on panels; connect cases with tubing and support tubing to prevent kinks. Use minimum tubing length.

G. Install direct-mounted pressure gages in piping tees with pressure gage located on pipe at the most readable position.

H. Install remote-mounted pressure gages on panel.

I. Install valve and snubber in piping for each pressure gage for fluids.

J. Install test plugs in piping tees.

K. Install thermometers in the following locations:

1. Inlet and outlet of each water heater.
2. Inlets and outlets of each domestic water heat exchanger.
3. Inlet and outlet of each domestic hot-water storage tank.
4. Inlet and outlet of each remote domestic water chiller.

L. Install pressure gages in the following locations:

1. Building water service entrance into building.
2. Inlet and outlet of each pressure-reducing valve.
3. Suction and discharge of each domestic water pump.

3.2 CONNECTIONS

A. Install meters and gages adjacent to machines and equipment to allow service and maintenance of meters, gages, machines, and equipment.

3.3 ADJUSTING

A. Adjust faces of meters and gages to proper angle for best visibility.

3.4 THERMOMETER SCALE-RANGE SCHEDULE

A. Scale Range for Domestic Cold-Water Piping: 0 to 100 deg F.

B. Scale Range for Domestic Cold-Water Piping: 0 to 150 deg F.

C. Scale Range for Domestic Cold-Water Piping: 30 to 240 deg F

D. Retain one or more of first three paragraphs below. If retaining more than one scale range, indicate location of each on Drawings.

E. Scale Range for Domestic Hot-Water Piping: 0 to 250 deg.

F. Scale Range for Domestic Hot-Water Piping: 20 to 240 deg F.

G. Scale Range for Domestic Hot-Water Piping: 30 to 240 deg F.

H. Scale Range for Domestic Cooled-Water Piping: 0 to 100 deg.

I. Scale Range for Domestic Cooled-Water Piping: 0 to 150 deg F.

3.5 PRESSURE-GAGE SCALE-RANGE SCHEDULE

A. Scale Range for Water Service Piping: 0 to 100 psi.

B. Scale Range for Water Service Piping: 0 to 160 psi.

C. Scale Range for Water Service Piping: 0 to 200 psi.

D. Scale Range for Domestic Water Piping: 0 to 100 psi.

E. Scale Range for Domestic Water Piping: 0 to 160.

F. Scale Range for Domestic Water Piping: 0 to 200 psi.

G. Scale Range for Domestic Water Piping: 0 to 300 psi.

END OF SECTION

SECTION 22 0523

GENERAL-DUTY VALVES FOR PLUMBING PIPING

PART 1 - GENERAL

1.1 RELATED DOCUMENTS

A. Drawings and general provisions of the Contract, including General and Supplementary Conditions and Division 01 Specification Sections, apply to this Section.

1.2 SUMMARY

A. Section Includes:

1. Bronze angle valves.
2. Bronze ball valves.
3. Iron, single-flange butterfly valves.
4. Bronze swing check valves.
5. Iron swing check valves.
6. Iron gate valves.
7. Iron globe valves.
8. Chainwheels.

B. Related Sections:

1. Section 22 0553 "Identification for Plumbing Piping and Equipment" for valve tags and schedules.
2. Section 22 1113 "Facility Water Distribution Piping" for valves applicable only to this piping.
3. Section 22 1116 "Domestic Water Piping" for valves applicable only to this piping.
4. Section 22 1513 "General-Service Compressed-Air Piping" for valves applicable only to this piping.
5. Section 22 6113 "Compressed-Air Piping for Laboratory and Healthcare Facilities" for valves applicable only to this piping.
6. Section 22 6213 "Vacuum Piping for Laboratory and Healthcare Facilities" for valves applicable only to this piping.
7. Section 22 6313 "Gas Piping for Laboratory and Healthcare Facilities" for valves applicable only to this piping.

1.3 DEFINITIONS

A. CWP: Cold working pressure.

B. EPDM: Ethylene propylene copolymer rubber.

C. NBR: Acrylonitrile-butadiene, Buna-N, or nitrile rubber.

D. NRS: Nonrising stem.

E. OS&Y: Outside screw and yoke.

F. RS: Rising stem.

G. SWP: Steam working pressure.

1.4 ACTION SUBMITTALS

A. Product Data: For each type of valve indicated.

1.5 QUALITY ASSURANCE

A. Source Limitations for Valves: Obtain each type of valve from single source from single manufacturer.

B. ASME Compliance:

1. ASME B16.10 and ASME B16.34 for ferrous valve dimensions and design criteria.
2. ASME B31.1 for power piping valves.
3. ASME B31.9 for building services piping valves.

C. NSF Compliance: NSF 61 for valve materials for potable-water service.

1.6 DELIVERY, STORAGE, AND HANDLING

A. Prepare valves for shipping as follows:

1. Protect internal parts against rust and corrosion.
2. Protect threads, flange faces, grooves, and weld ends.
3. Set angle, gate, and globe valves closed to prevent rattling.
4. Set ball and plug valves open to minimize exposure of functional surfaces.
5. Set butterfly valves closed or slightly open.
6. Block check valves in either closed or open position.

B. Use the following precautions during storage:

1. Maintain valve end protection.
2. Store valves indoors and maintain at higher than ambient dew point temperature. If outdoor storage is necessary, store valves off the ground in watertight enclosures.

C. Use sling to handle large valves; rig sling to avoid damage to exposed parts. Do not use handwheels or stems as lifting or rigging points.

PART 2 - PRODUCTS

2.1 GENERAL REQUIREMENTS FOR VALVES

A. Valve Pressure and Temperature Ratings: Not less than indicated and as required for system pressures and temperatures.

B. Valve Sizes: Same as upstream piping unless otherwise indicated.

C. Valve Actuator Types:

1. Gear Actuator: For quarter-turn valves NPS 8 and larger.
2. Handwheel: For valves other than quarter-turn types.
3. Handlever: For quarter-turn valves NPS 6 and smaller except plug valves.
4. Chainwheel: Device for attachment to valve handwheel, stem, or other actuator; of size and with chain for mounting height, as indicated in the "Valve Installation" Article.

D. Valves in Insulated Piping: With 2-inch stem extensions and the following features:

1. Gate Valves: With rising stem.
2. Ball Valves: With extended operating handle of non-thermal-conductive material, and protective sleeve that allows operation of valve without breaking the vapor seal or disturbing insulation.
3. Butterfly Valves: With extended neck.

E. Valve-End Connections:

1. Flanged: With flanges according to ASME B16.1 for iron valves.
2. Grooved: With grooves according to AWWA C606.
3. Solder Joint: With sockets according to ASME B16.18.
4. Threaded: With threads according to ASME B1.20.1.

F. Valve Bypass and Drain Connections: MSS SP-45.

2.2 BRONZE ANGLE VALVES

A. Class 125, Bronze Angle Valves with Nonmetallic Disc:

1. Manufacturers: Subject to compliance with requirements, available manufacturers offering products that may be incorporated into the Work include, but are not limited to, the following:

a. American Valve, Inc.
b. NIBCO INC.

2. Description:

a. Standard: MSS SP-80, Type 2.
b. CWP Rating: 200 psig.
c. Body Material: ASTM B 62, bronze with integral seat and screw-in bonnet.
d. Ends: Threaded.
e. Stem: Bronze.
f. Disc: PTFE or TFE.
g. Packing: Asbestos free.
h. Handwheel: Malleable iron, bronze, or aluminum.

2.3 BRONZE BALL VALVES

A. Two-Piece, Full-Port, Bronze Ball Valves with Bronze Trim:

1. Manufacturers: Subject to compliance with requirements, provide products by one of the following:

    a. American Valve, Inc.
    b. Conbraco Industries, Inc.; Apollo Valves.
    c. Crane Co.; Crane Valve Group; Crane Valves.
    d. Hammond Valve.
    e. Milwaukee Valve Company.
    f. NIBCO INC.
    g. Watts Regulator Co.; a division of Watts Water Technologies, Inc.

2. Description:

    a. Standard: MSS SP-110.
    b. SWP Rating: 150 psig.
    c. CWP Rating: 600 psig.
    d. Body Design: Two piece.
    e. Body Material: Bronze.
    f. Ends: Threaded.
    g. Seats: PTFE or TFE.
    h. Stem: Bronze.
    i. Ball: Chrome-plated brass.
    j. Port: Full.

2.4 IRON, SINGLE-FLANGE BUTTERFLY VALVES

A. 200 CWP, Iron, Single-Flange Butterfly Valves with EPDM Seat and Aluminum-Bronze Disc:

1. Manufacturers: Subject to compliance with requirements, provide products by one of the following:
    a. Conbraco Industries, Inc.; Apollo Valves.
    b. Cooper Cameron Valves; a division of Cooper Cameron Corporation.
    c. Crane Co.; Crane Valve Group; Jenkins Valves.
    d. Crane Co.; Crane Valve Group; Stockham Division.
    e. Hammond Valve.
    f. Milwaukee Valve Company.
    g. NIBCO INC.
    h. Watts Regulator Co.; a division of Watts Water Technologies, Inc.

2. Description:

    a. Standard: MSS SP-67, Type I.
    b. CWP Rating: 200 psig.
    c. Body Design: Lug type; suitable for bidirectional dead-end service at rated pressure without use of downstream flange.
    d. Body Material: ASTM A 126, cast iron or ASTM A 536, ductile iron.
    e. Seat: EPDM.
    f. Stem: One- or two-piece stainless steel.
    g. Disc: Aluminum bronze.

2.5 BRONZE SWING CHECK VALVES

A. Class 125, Bronze Swing Check Valves with Nonmetallic Disc:

1. Manufacturers: Subject to compliance with requirements, provide products by one of the following:

    a. Crane Co.; Crane Valve Group; Crane Valves.
    b. Crane Co.; Crane Valve Group; Jenkins Valves.
    c. Crane Co.; Crane Valve Group; Stockham Division.
    d. Hammond Valve.
    e. Milwaukee Valve Company.
    f. NIBCO INC.
    g. Watts Regulator Co.; a division of Watts Water Technologies, Inc.

2. Description:

    a. Standard: MSS SP-80, Type 4.
    b. CWP Rating: 200 psig.
    c. Body Design: Horizontal flow.
    d. Body Material: ASTM B 62, bronze.
    e. Ends: Threaded.
    f. Disc: PTFE or TFE.

2.6 IRON SWING CHECK VALVES

A. Class 125, Iron Swing Check Valves with Nonmetallic-to-Metal Seats:

1. Manufacturers: Subject to compliance with requirements, provide products by one of the following:

    a. Crane Co.; Crane Valve Group; Crane Valves.
    b. Crane Co.; Crane Valve Group; Stockham Division.
    c. Hammond Valve.
    d. NIBCO INC.
    e. Watts Regulator Co.; a division of Watts Water Technologies, Inc.

2. Description:

    a. Standard: MSS SP-71, Type I.
    b. CWP Rating: 200 psig.
    c. Body Design: Clear or full waterway.
    d. Body Material: ASTM A 126, gray iron with bolted bonnet.
    e. Ends: Flanged.
    f. Trim: Composition.
    g. Seat Ring: Bronze.
    h. Disc Holder: Bronze.
    i. Disc: PTFE or TFE.
    j. Gasket: Asbestos free.

2.7 IRON GATE VALVES

A. Class 125, NRS, Iron Gate Valves:

1. Manufacturers: Subject to compliance with requirements, provide products by one of the following:

a. Crane Co.; Crane Valve Group; Crane Valves.
b. Crane Co.; Crane Valve Group; Jenkins Valves.
c. Crane Co.; Crane Valve Group; Stockham Division.
d. Hammond Valve.
e. Milwaukee Valve Company.
f. NIBCO INC.
g. Watts Regulator Co.; a division of Watts Water Technologies, Inc.

2. Description:

a. Standard: MSS SP-70, Type I.
b. CWP Rating: 200 psig.
c. Body Material: ASTM A 126, gray iron with bolted bonnet.
d. Ends: Flanged.
e. Trim: Bronze.
f. Disc: Solid wedge.
g. Packing and Gasket: Asbestos free.

2.8 IRON GLOBE VALVES

A. Class 125, Iron Globe Valves:

1. Manufacturers: Subject to compliance with requirements, provide products by one of the following:

a. Crane Co.; Crane Valve Group; Crane Valves.
b. Crane Co.; Crane Valve Group; Jenkins Valves.
c. Crane Co.; Crane Valve Group; Stockham Division.
d. Hammond Valve.
e. Milwaukee Valve Company.
f. NIBCO INC.
g. Watts Regulator Co.; a division of Watts Water Technologies, Inc.

2. Description:

a. Standard: MSS SP-85, Type I.
b. CWP Rating: 200 psig.
c. Body Material: ASTM A 126, gray iron with bolted bonnet.
d. Ends: Flanged.
e. Trim: Bronze.
f. Packing and Gasket: Asbestos free.

2.9 CHAINWHEELS

A. Manufacturers: Subject to compliance with requirements, available manufacturers offering products that may be incorporated into the Work include, but are not limited to, the following:

1. Babbitt Steam Specialty Co.
2. Roto Hammer Industries.
3. Trumbull Industries.

B. Description: Valve actuation assembly with sprocket rim, brackets, and chain.

1. Brackets: Type, number, size, and fasteners required to mount actuator on valve.
2. Attachment: For connection to butterfly valve stems.
3. Sprocket Rim with Chain Guides: Ductile iron, of type and size required for valve.
4. Chain: Hot-dip, galvanized steel, of size required to fit sprocket rim.

PART 3 - EXECUTION

3.1 EXAMINATION

A. Examine valve interior for cleanliness, freedom from foreign matter, and corrosion. Remove special packing materials, such as blocks, used to prevent disc movement during shipping and handling.

B. Operate valves in positions from fully open to fully closed. Examine guides and seats made accessible by such operations.

C. Examine threads on valve and mating pipe for form and cleanliness.

D. Examine mating flange faces for conditions that might cause leakage. Check bolting for proper size, length, and material. Verify that gasket is of proper size, that its material composition is suitable for service, and that it is free from defects and damage.

E. Do not attempt to repair defective valves; replace with new valves.

3.2 VALVE INSTALLATION

A. Install valves with unions or flanges at each piece of equipment arranged to allow service, maintenance, and equipment removal without system shutdown.

B. Locate valves for easy access and provide separate support where necessary.

C. Install valves in horizontal piping with stem at or above center of pipe.

D. Install valves in position to allow full stem movement.

E. Install chainwheels on operators for butterfly, gate, and globe valves NPS 4 and larger and more than 96 inches above floor. Extend chains to 60 inches above finished floor.

F. Install check valves for proper direction of flow and as follows:

1. Swing Check Valves: In horizontal position with hinge pin level.

3.3 ADJUSTING

A. Adjust or replace valve packing after piping systems have been tested and put into service but before final adjusting and balancing. Replace valves if persistent leaking occurs.

3.4 GENERAL REQUIREMENTS FOR VALVE APPLICATIONS

A. If valve applications are not indicated, use the following:

1. Shutoff Service: Ball valves.
2. Butterfly Valve Dead-End Service: Single-flange (lug) type.
3. Throttling Service: Globe , ball, or butterfly valves.
4. Pump-Discharge Check Valves:

    a. NPS 2 and Smaller: Bronze swing check valves with nonmetallic disc.
    b. NPS 2-1/2 and Larger for Domestic Water: Iron swing check valves with lever and weight or with spring.

B. If valves with specified SWP classes or CWP ratings are not available, the same types of valves with higher SWP classes or CWP ratings may be substituted.

C. Select valves, except wafer types, with the following end connections:

1. For Copper Tubing, NPS 2 and Smaller: Threaded ends except where solder-joint valve-end option is indicated in valve schedules below.
2. For Copper Tubing, NPS 2-1/2 to NPS 4: Flanged ends except where threaded valve-end option is indicated in valve schedules below.
3. For Steel Piping, NPS 2 and Smaller: Threaded ends.
4. For Steel Piping, NPS 2-1/2 to NPS 4: Flanged ends except where threaded valve-end option is indicated in valve schedules below.
5. For Steel Piping, NPS 5 and Larger: Flanged ends.

3.5 DOMESTIC, HOT- AND COLD-WATER VALVE SCHEDULE

A. Pipe NPS 2 and Smaller:

1. Bronze Valves: May be provided with solder-joint ends instead of threaded ends.
2. Bronze Angle Valves: Class 125, nonmetallic disc.
3. Ball Valves: Two piece, full port, bronze with bronze trim.
4. Bronze Swing Check Valves: Class 125, nonmetallic disc.

B. Pipe NPS 2-1/2 and Larger:

1. Iron Valves, NPS 2-1/2 to NPS 4: May be provided with threaded ends instead of flanged ends.
2. Iron, Single-Flange Butterfly Valves: 200 CWP, EPDM seat, aluminum-bronze disc.
3. Iron Swing Check Valves: Class 125, nonmetallic-to-metal seats.
4. Iron Gate Valves: Class 125, NRS.
5. Iron Globe Valves: Class 125.

END OF SECTION

SECTION 22 0529

HANGERS AND SUPPORTS FOR PLUMBING PIPING AND EQUIPMENT

PART 1 - GENERAL

1.1 RELATED DOCUMENTS

A. Drawings and general provisions of the Contract, including General and Supplementary Conditions and Division 01 Specification Sections, apply to this Section.

1.2 SUMMARY

A. Section Includes:

1. Metal pipe hangers and supports.
2. Trapeze pipe hangers.
3. Fiberglass pipe hangers.
4. Metal framing systems.
5. Fiberglass strut systems.
6. Thermal-hanger shield inserts.
7. Fastener systems.
8. Pipe stands.
9. Pipe positioning systems.
10. Equipment supports.

B. Related Sections:

1. Section 05 5000 "Metal Fabrications" for structural-steel shapes and plates for trapeze hangers for pipe and equipment supports.
2. Section 22 0516 "Expansion Fittings and Loops for Plumbing Piping" for pipe guides and anchors.

1.3 DEFINITIONS

A. MSS: Manufacturers Standardization Society of The Valve and Fittings Industry Inc.

1.4 PERFORMANCE REQUIREMENTS

A. Delegated Design: Design trapeze pipe hangers and equipment supports, including comprehensive engineering analysis by a qualified professional engineer, using performance requirements and design criteria indicated.

B. Structural Performance: Hangers and supports for plumbing piping and equipment shall withstand the effects of gravity loads and stresses within limits and under conditions indicated according to ASCE/SEI 7.

1. Design supports for multiple pipes, including pipe stands, capable of supporting combined weight of supported systems, system contents, and test water.
2. Design equipment supports capable of supporting combined operating weight of supported equipment and connected systems and components.
3. Design seismic-restraint hangers and supports for piping and equipment and obtain approval from authorities having jurisdiction.

1.5 ACTION SUBMITTALS

A. Product Data: For each type of product indicated.

B. Shop Drawings: Show fabrication and installation details and include calculations for the following; include Product Data for components:

1. Trapeze pipe hangers.
2. Metal framing systems.
3. Fiberglass strut systems.
4. Pipe stands.
5. Equipment supports.

C. Delegated-Design Submittal: For trapeze hangers indicated to comply with performance requirements and design criteria, including analysis data signed and sealed by the qualified professional engineer responsible for their preparation.

1. Detail fabrication and assembly of trapeze hangers.
2. Design Calculations: Calculate requirements for designing trapeze hangers.

1.6 INFORMATIONAL SUBMITTALS

A. Welding certificates.

1.7 QUALITY ASSURANCE

A. Structural Steel Welding Qualifications: Qualify procedures and personnel according to AWS D1.1/D1.1M, "Structural Welding Code - Steel."

B. Pipe Welding Qualifications: Qualify procedures and operators according to ASME Boiler and Pressure Vessel Code.

PART 2 - PRODUCTS

2.1 METAL PIPE HANGERS AND SUPPORTS

A. Carbon-Steel Pipe Hangers and Supports:

1. Description: MSS SP-58, Types 1 through 58, factory-fabricated components.
2. Galvanized Metallic Coatings: Pregalvanized or hot dipped.
3. Nonmetallic Coatings: Plastic coating, jacket, or liner.

4. Padded Hangers: Hanger with fiberglass or other pipe insulation pad or cushion to support bearing surface of piping.
5. Hanger Rods: Continuous-thread rod, nuts, and washer made of carbon steel.

B. Stainless-Steel Pipe Hangers and Supports:

1. Description: MSS SP-58, Types 1 through 58, factory-fabricated components.
2. Padded Hangers: Hanger with fiberglass or other pipe insulation pad or cushion to support bearing surface of piping.
3. Hanger Rods: Continuous-thread rod, nuts, and washer made of stainless steel.

C. Copper Pipe Hangers:

1. Description: MSS SP-58, Types 1 through 58, copper-coated-steel, factory-fabricated components.
2. Hanger Rods: Continuous-thread rod, nuts, and washer made of copper-coated steel or stainless steel.

2.2 TRAPEZE PIPE HANGERS

A. Description: MSS SP-69, Type 59, shop- or field-fabricated pipe-support assembly made from structural carbon-steel shapes with MSS SP-58 carbon-steel hanger rods, nuts, saddles, and U-bolts.

2.3 METAL FRAMING SYSTEMS

A. MFMA Manufacturer Metal Framing Systems:
1. Description: Shop- or field-fabricated pipe-support assembly for supporting multiple parallel pipes.
2. Standard: MFMA-4.
3. Channels: Continuous slotted steel channel with inturned lips.
4. Channel Nuts: Formed or stamped steel nuts or other devices designed to fit into channel slot and, when tightened, prevent slipping along channel.
5. Hanger Rods: Continuous-thread rod, nuts, and washer made of carbon steel.
6. Metallic Coating: Hot-dipped galvanized.
7. Paint Coating: Epoxy.
8. Plastic Coating: Epoxy.

B. Non-MFMA Manufacturer Metal Framing Systems:
1. Description: Shop- or field-fabricated pipe-support assembly made of steel channels, accessories, fittings, and other components for supporting multiple parallel pipes.
2. Standard: Comply with MFMA-4.
3. Channels: Continuous slotted steel channel with inturned lips.
4. Channel Nuts: Formed or stamped steel nuts or other devices designed to fit into channel slot and, when tightened, prevent slipping along channel.
5. Hanger Rods: Continuous-thread rod, nuts, and washer made of carbon steel.
6. Coating: Zinc.

2.4 FIBERGLASS STRUT SYSTEMS

A. Description: Shop- or field-fabricated pipe-support assembly similar to MFMA-4 for supporting

multiple parallel pipes.

1. Channels: Continuous slotted fiberglass channel with inturned lips.
2. Channel Nuts: Fiberglass nuts or other devices designed to fit into channel slot and, when tightened, prevent slipping along channel.
3. Hanger Rods: Continuous-thread rod, nuts, and washer made of stainless steel.

2.5 THERMAL-HANGER SHIELD INSERTS

A. Insulation-Insert Material for Cold Piping: ASTM C 552, Type II cellular glass with 100-psig or ASTM C 591, Type VI, Grade 1 polyisocyanurate with 125-psig minimum compressive strength and vapor barrier.

B. Insulation-Insert Material for Hot Piping: Water-repellent treated, ASTM C 533, Type I calcium silicate with 100-psig or ASTM C 591, Type VI, Grade 1 polyisocyanurate with 125-psig minimum compressive strength.

C. For Trapeze or Clamped Systems: Insert and shield shall cover entire circumference of pipe.

D. For Clevis or Band Hangers: Insert and shield shall cover lower 180 degrees of pipe.

E. Insert Length: Extend 2 inches beyond sheet metal shield for piping operating below ambient air temperature.

2.6 FASTENER SYSTEMS

A. Powder-Actuated Fasteners: Threaded-steel stud, for use in hardened portland cement concrete with pull-out, tension, and shear capacities appropriate for supported loads and building materials where used.

B. Mechanical-Expansion Anchors: Insert-wedge-type, zinc-coated steel anchors, for use in hardened portland cement concrete; with pull-out, tension, and shear capacities appropriate for supported loads and building materials where used.

2.7 PIPE STANDS

A. General Requirements for Pipe Stands: Shop- or field-fabricated assemblies made of manufactured corrosion-resistant components to support roof-mounted piping.

B. Compact Pipe Stand: One-piece plastic unit with integral-rod roller, pipe clamps, or V-shaped cradle to support pipe, for roof installation without membrane penetration.

C. Low-Type, Single-Pipe Stand: One-piece stainless-steel base unit with plastic roller, for roof installation without membrane penetration.

D. High-Type, Single-Pipe Stand:

1. Description: Assembly of base, vertical and horizontal members, and pipe support, for roof installation without membrane penetration.
2. Base: Stainless steel.

3. Vertical Members: Two or more cadmium-plated-steel or stainless-steel, continuous-thread rods.
4. Horizontal Member: Cadmium-plated-steel or stainless-steel rod with plastic or stainless-steel, roller-type pipe support.

E. High-Type, Multiple-Pipe Stand:

1. Description: Assembly of bases, vertical and horizontal members, and pipe supports, for roof installation without membrane penetration.
2. Bases: One or more; plastic.
3. Vertical Members: Two or more protective-coated-steel channels.
4. Horizontal Member: Protective-coated-steel channel.
5. Pipe Supports: Galvanized-steel, clevis-type pipe hangers.

F. Curb-Mounting-Type Pipe Stands: Shop- or field-fabricated pipe supports made from structural-steel shapes, continuous-thread rods, and rollers, for mounting on permanent stationary roof curb.

2.8 PIPE POSITIONING SYSTEMS

A. Description: IAPMO PS 42, positioning system of metal brackets, clips, and straps for positioning piping in pipe spaces; for plumbing fixtures in commercial applications.

2.9 EQUIPMENT SUPPORTS

A. Description: Welded, shop- or field-fabricated equipment support made from structural carbon-steel shapes.

2.10 MISCELLANEOUS MATERIALS

A. Structural Steel: ASTM A 36/A 36M, carbon-steel plates, shapes, and bars; black and galvanized.

B. Grout: ASTM C 1107, factory-mixed and -packaged, dry, hydraulic-cement, nonshrink and nonmetallic grout; suitable for interior and exterior applications.

1. Properties: Nonstaining, noncorrosive, and nongaseous.
2. Design Mix: 5000-psi, 28-day compressive strength.

PART 3 - EXECUTION

3.1 HANGER AND SUPPORT INSTALLATION

A. Metal Pipe-Hanger Installation: Comply with MSS SP-69 and MSS SP-89. Install hangers, supports, clamps, and attachments as required to properly support piping from the building structure.

B. Metal Trapeze Pipe-Hanger Installation: Comply with MSS SP-69 and MSS SP-89. Arrange for

grouping of parallel runs of horizontal piping, and support together on field-fabricated trapeze pipe hangers.

1. Pipes of Various Sizes: Support together and space trapezes for smallest pipe size or install intermediate supports for smaller diameter pipes as specified for individual pipe hangers.
2. Field fabricate from ASTM A 36/A 36M, carbon-steel shapes selected for loads being supported. Weld steel according to AWS D1.1/D1.1M.

C. Fiberglass Pipe-Hanger Installation: Comply with applicable portions of MSS SP-69 and MSS SP-89. Install hangers and attachments as required to properly support piping from building structure.

D. Metal Framing System Installation: Arrange for grouping of parallel runs of piping, and support together on field-assembled metal framing systems.

E. Fiberglass Strut System Installation: Arrange for grouping of parallel runs of piping, and support together on field-assembled fiberglass struts.

F. Thermal-Hanger Shield Installation: Install in pipe hanger or shield for insulated piping.

G. Fastener System Installation:

1. Install powder-actuated fasteners for use in lightweight concrete or concrete slabs less than 4 inches thick in concrete after concrete is placed and completely cured. Use operators that are licensed by powder-actuated tool manufacturer. Install fasteners according to powder-actuated tool manufacturer's operating manual.
2. Install mechanical-expansion anchors in concrete after concrete is placed and completely cured. Install fasteners according to manufacturer's written instructions.

H. Pipe Stand Installation:

1. Pipe Stand Types except Curb-Mounted Type: Assemble components and mount on smooth roof surface. Do not penetrate roof membrane.
2. Curb-Mounted-Type Pipe Stands: Assemble components or fabricate pipe stand and mount on permanent, stationary roof curb. See Section 07 7200 "Roof Accessories" for curbs.

I. Pipe Positioning-System Installation: Install support devices to make rigid supply and waste piping connections to each plumbing fixture.

J. Install hangers and supports complete with necessary attachments, inserts, bolts, rods, nuts, washers, and other accessories.

K. Equipment Support Installation: Fabricate from welded-structural-steel shapes.

L. Install hangers and supports to allow controlled thermal and seismic movement of piping systems, to permit freedom of movement between pipe anchors, and to facilitate action of expansion joints, expansion loops, expansion bends, and similar units.

M. Install lateral bracing with pipe hangers and supports to prevent swaying.

N. Install building attachments within concrete slabs or attach to structural steel. Install additional

attachments at concentrated loads, including valves, flanges, and strainers, NPS 2-1/2 and larger and at changes in direction of piping. Install concrete inserts before concrete is placed; fasten inserts to forms and install reinforcing bars through openings at top of inserts.

O. Load Distribution: Install hangers and supports so that piping live and dead loads and stresses from movement will not be transmitted to connected equipment.

P. Pipe Slopes: Install hangers and supports to provide indicated pipe slopes and to not exceed maximum pipe deflections allowed by ASME B31.9 for building services piping.

Q. Insulated Piping:

1. Attach clamps and spacers to piping.

    a. Piping Operating above Ambient Air Temperature: Clamp may project through insulation.
    b. Piping Operating below Ambient Air Temperature: Use thermal-hanger shield insert with clamp sized to match OD of insert.
    c. Do not exceed pipe stress limits allowed by ASME B31.9 for building services piping.

2. Install MSS SP-58, Type 39, protection saddles if insulation without vapor barrier is indicated. Fill interior voids with insulation that matches adjoining insulation.

    a. Option: Thermal-hanger shield inserts may be used. Include steel weight-distribution plate for pipe NPS 4 and larger if pipe is installed on rollers.

3. Install MSS SP-58, Type 40, protective shields on cold piping with vapor barrier. Shields shall span an arc of 180 degrees.

    a. Option: Thermal-hanger shield inserts may be used. Include steel weight-distribution plate for pipe NPS 4 and larger if pipe is installed on rollers.

4. Shield Dimensions for Pipe: Not less than the following:

    a. NPS 1/4 to NPS 3-1/2: 12 inches long and 0.048 inch thick.
    b. NPS 4 12 inches long and 0.06 inch thick.
    c. NPS 5 and NPS 6: 18 inches long and 0.06 inch thick.
    d. NPS 8 to NPS 14: 24 inches long and 0.075 inch thick.
    e. NPS 16 to NPS 24: 24 inches long and 0.105 inch thick.

5. Pipes NPS 8 and Larger: Include wood or reinforced calcium-silicate-insulation inserts of length at least as long as protective shield.
6. Thermal-Hanger Shields: Install with insulation same thickness as piping insulation.

3.2 EQUIPMENT SUPPORTS

A. Fabricate structural-steel stands to suspend equipment from structure overhead or to support equipment above floor.

B. Grouting: Place grout under supports for equipment and make bearing surface smooth.

C. Provide lateral bracing, to prevent swaying, for equipment supports.

3.3 METAL FABRICATIONS

A. Cut, drill, and fit miscellaneous metal fabrications for trapeze pipe hangers and equipment supports.

B. Fit exposed connections together to form hairline joints. Field weld connections that cannot be shop welded because of shipping size limitations.

C. Field Welding: Comply with AWS D1.1/D1.1M procedures for shielded, metal arc welding; appearance and quality of welds; and methods used in correcting welding work; and with the following:

1. Use materials and methods that minimize distortion and develop strength and corrosion resistance of base metals.
2. Obtain fusion without undercut or overlap.
3. Remove welding flux immediately.
4. Finish welds at exposed connections so no roughness shows after finishing and so contours of welded surfaces match adjacent contours.

3.4 ADJUSTING

A. Hanger Adjustments: Adjust hangers to distribute loads equally on attachments and to achieve indicated slope of pipe.

B. Trim excess length of continuous-thread hanger and support rods to 1-1/2 inches.

3.5 PAINTING

A. Touchup: Clean field welds and abraded areas of shop paint. Paint exposed areas immediately after erecting hangers and supports. Use same materials as used for shop painting. Comply with SSPC-PA 1 requirements for touching up field-painted surfaces.

1. Apply paint by brush or spray to provide a minimum dry film thickness of 2.0 mils.

B. Touchup: Cleaning and touchup painting of field welds, bolted connections, and abraded areas of shop paint on miscellaneous metal are specified in Section 09 9113 "Exterior Painting." Section 09 9123 "Interior Painting."Section 09 9600 "High-Performance Coatings."

C. Galvanized Surfaces: Clean welds, bolted connections, and abraded areas and apply galvanizing-repair paint to comply with ASTM A 780.

3.6 HANGER AND SUPPORT SCHEDULE

A. Specific hanger and support requirements are in Sections specifying piping systems and equipment.

B. Comply with MSS SP-69 for pipe-hanger selections and applications that are not specified in

piping system Sections.

C. Use hangers and supports with galvanized metallic coatings for piping and equipment that will not have field-applied finish.

D. Use nonmetallic coatings on attachments for electrolytic protection where attachments are in direct contact with copper tubing.

E. Use carbon-steel pipe hangers and supports and metal framing systems and attachments for general service applications.

F. Use stainless-steel pipe hangers and fiberglass strut systems and stainless-steel attachments for hostile environment applications.

G. Use copper-plated pipe hangers and copper or stainless-steel attachments for copper piping and tubing.

H. Use padded hangers for piping that is subject to scratching.

I. Use thermal-hanger shield inserts for insulated piping and tubing.

J. Horizontal-Piping Hangers and Supports: Unless otherwise indicated and except as specified in piping system Sections, install the following types:

1. Adjustable, Steel Clevis Hangers (MSS Type 1): For suspension of noninsulated or insulated, stationary pipes NPS 1/2 to NPS 30
2. Yoke-Type Pipe Clamps (MSS Type 2): For suspension of up to 1050 deg F pipes NPS 4 to NPS 24 requiring up to 4 inches of insulation.
3. Carbon- or Alloy-Steel, Double-Bolt Pipe Clamps (MSS Type 3): For suspension of pipes NPS 3/4 to NPS 36 requiring clamp flexibility and up to 4 inches of insulation.
4. Steel Pipe Clamps (MSS Type 4): For suspension of cold and hot pipes NPS 1/2 to NPS 24 if little or no insulation is required.
5. Pipe Hangers (MSS Type 5): For suspension of pipes NPS 1/2 to NPS 4, to allow off-center closure for hanger installation before pipe erection.
6. Adjustable, Swivel Split- or Solid-Ring Hangers (MSS Type 6): For suspension of noninsulated, stationary pipes NPS 3/4 to NPS 8.
7. Adjustable, Steel Band Hangers (MSS Type 7): For suspension of noninsulated, stationary pipes NPS 1/2 to NPS 8.
8. Adjustable Band Hangers (MSS Type 9): For suspension of noninsulated, stationary pipes NPS 1/2 to NPS 8.
9. Adjustable, Swivel-Ring Band Hangers (MSS Type 10): For suspension of noninsulated, stationary pipes NPS 1/2 to NPS 8.
10. Split Pipe Ring with or without Turnbuckle Hangers (MSS Type 11): For suspension of noninsulated, stationary pipes NPS 3/8 to NPS 8.
11. Extension Hinged or Two-Bolt Split Pipe Clamps (MSS Type 12): For suspension of noninsulated, stationary pipes NPS 3/8 to NPS 3.
12. U-Bolts (MSS Type 24): For support of heavy pipes NPS 1/2 to NPS 30.
13. Clips (MSS Type 26): For support of insulated pipes not subject to expansion or contraction.
14. Pipe Saddle Supports (MSS Type 36): For support of pipes NPS 4 to NPS 36, with steel-pipe base stanchion support and cast-iron floor flange or carbon-steel plate.
15. Pipe Stanchion Saddles (MSS Type 37): For support of pipes NPS 4 to NPS 36, with steel-pipe base stanchion support and cast-iron floor flange or carbon-steel plate, and with U-bolt to retain pipe.

16. Adjustable Pipe Saddle Supports (MSS Type 38): For stanchion-type support for pipes NPS 2-1/2 to NPS 36 if vertical adjustment is required, with steel-pipe base stanchion support and cast-iron floor flange.
17. Single-Pipe Rolls (MSS Type 41): For suspension of pipes NPS 1 to NPS 30, from two rods if longitudinal movement caused by expansion and contraction might occur.
18. Adjustable Roller Hangers (MSS Type 43): For suspension of pipes NPS 2-1/2 to NPS 24, from single rod if horizontal movement caused by expansion and contraction might occur.
19. Complete Pipe Rolls (MSS Type 44): For support of pipes NPS 2 to NPS 42 if longitudinal movement caused by expansion and contraction might occur but vertical adjustment is not necessary.
20. Pipe Roll and Plate Units (MSS Type 45): For support of pipes NPS 2 to NPS 24 if small horizontal movement caused by expansion and contraction might occur and vertical adjustment is not necessary.
21. Adjustable Pipe Roll and Base Units (MSS Type 46): For support of pipes NPS 2 to NPS 30 if vertical and lateral adjustment during installation might be required in addition to expansion and contraction.

K. Vertical-Piping Clamps: Unless otherwise indicated and except as specified in piping system Sections, install the following types:

1. Extension Pipe or Riser Clamps (MSS Type 8): For support of pipe risers NPS 3/4 to NPS 24.
2. Carbon- or Alloy-Steel Riser Clamps (MSS Type 42): For support of pipe risers NPS 3/4 to NPS 24 if longer ends are required for riser clamps.

L. Hanger-Rod Attachments: Unless otherwise indicated and except as specified in piping system Sections, install the following types:

1. Steel Turnbuckles (MSS Type 13): For adjustment up to 6 inches for heavy loads.
2. Steel Clevises (MSS Type 14): For 120 to 450 deg F piping installations.
3. Swivel Turnbuckles (MSS Type 15): For use with MSS Type 11, split pipe rings.
4. Malleable-Iron Sockets (MSS Type 16): For attaching hanger rods to various types of building attachments.
5. Steel Weldless Eye Nuts (MSS Type 17): For 120 to 450 deg F piping installations.

M. Building Attachments: Unless otherwise indicated and except as specified in piping system Sections, install the following types:

1. Steel or Malleable Concrete Inserts (MSS Type 18): For upper attachment to suspend pipe hangers from concrete ceiling.
2. Top-Beam C-Clamps (MSS Type 19): For use under roof installations with bar-joist construction, to attach to top flange of structural shape.
3. Side-Beam or Channel Clamps (MSS Type 20): For attaching to bottom flange of beams, channels, or angles.
4. Center-Beam Clamps (MSS Type 21): For attaching to center of bottom flange of beams.
5. Welded Beam Attachments (MSS Type 22): For attaching to bottom of beams if loads are considerable and rod sizes are large.
6. C-Clamps (MSS Type 23): For structural shapes.
7. Top-Beam Clamps (MSS Type 25): For top of beams if hanger rod is required tangent to flange edge.
8. Side-Beam Clamps (MSS Type 27): For bottom of steel I-beams.
9. Steel-Beam Clamps with Eye Nuts (MSS Type 28): For attaching to bottom of steel I-beams for heavy loads.

10. Linked-Steel Clamps with Eye Nuts (MSS Type 29): For attaching to bottom of steel I-beams for heavy loads, with link extensions.
11. Malleable-Beam Clamps with Extension Pieces (MSS Type 30): For attaching to structural steel.
12. Welded-Steel Brackets: For support of pipes from below or for suspending from above by using clip and rod. Use one of the following for indicated loads:

    a. Light (MSS Type 31): 750 lb.
    b. Medium (MSS Type 32): 1500 lb.
    c. Heavy (MSS Type 33): 3000 lb.

13. Side-Beam Brackets (MSS Type 34): For sides of steel or wooden beams.
14. Plate Lugs (MSS Type 57): For attaching to steel beams if flexibility at beam is required.
15. Horizontal Travelers (MSS Type 58): For supporting piping systems subject to linear horizontal movement where headroom is limited.

N. Saddles and Shields: Unless otherwise indicated and except as specified in piping system Sections, install the following types:

1. Steel-Pipe-Covering Protection Saddles (MSS Type 39): To fill interior voids with insulation that matches adjoining insulation.
2. Protection Shields (MSS Type 40): Of length recommended in writing by manufacturer to prevent crushing insulation.
3. Thermal-Hanger Shield Inserts: For supporting insulated pipe.

O. Spring Hangers and Supports: Unless otherwise indicated and except as specified in piping system Sections, install the following types:

1. Restraint-Control Devices (MSS Type 47): Where indicated to control piping movement.
2. Spring Cushions (MSS Type 48): For light loads if vertical movement does not exceed 1-1/4 inches.
3. Spring-Cushion Roll Hangers (MSS Type 49): For equipping Type 41, roll hanger with springs.
4. Spring Sway Braces (MSS Type 50): To retard sway, shock, vibration, or thermal expansion in piping systems.
5. Variable-Spring Hangers (MSS Type 51): Preset to indicated load and limit variability factor to 25 percent to allow expansion and contraction of piping system from hanger.
6. Variable-Spring Base Supports (MSS Type 52): Preset to indicated load and limit variability factor to 25 percent to allow expansion and contraction of piping system from base support.
7. Variable-Spring Trapeze Hangers (MSS Type 53): Preset to indicated load and limit variability factor to 25 percent to allow expansion and contraction of piping system from trapeze support.
8. Constant Supports: For critical piping stress and if necessary to avoid transfer of stress from one support to another support, critical terminal, or connected equipment. Include auxiliary stops for erection, hydrostatic test, and load-adjustment capability. These supports include the following types:

    a. Horizontal (MSS Type 54): Mounted horizontally.
    b. Vertical (MSS Type 55): Mounted vertically.
    c. Trapeze (MSS Type 56): Two vertical-type supports and one trapeze member.

P. Comply with MSS SP-69 for trapeze pipe-hanger selections and applications that are not specified in piping system Sections.

Q. Comply with MFMA-103 for metal framing system selections and applications that are not specified in piping system Sections.

R. Use powder-actuated fasteners or mechanical-expansion anchors instead of building attachments where required in concrete construction.

S. Use pipe positioning systems in pipe spaces behind plumbing fixtures to support supply and waste piping for plumbing fixtures.

END OF SECTION

SECTION 22 0553

IDENTIFICATION FOR PLUMBING PIPING AND EQUIPMENT

PART 1 - GENERAL

1.1 RELATED DOCUMENTS

A. Drawings and general provisions of the Contract, including General and Supplementary Conditions and Division 01 Specification Sections, apply to this Section.

1.2 SUMMARY

A. Section Includes:

1. Equipment labels.
2. Warning signs and labels.
3. Pipe labels.
4. Stencils.
5. Valve tags.
6. Warning tags.

1.3 ACTION SUBMITTALS

A. Product Data: For each type of product indicated.

B. Samples: For color, letter style, and graphic representation required for each identification material and device.

C. Equipment Label Schedule: Include a listing of all equipment to be labeled with the proposed content for each label.

D. Valve numbering scheme.

E. Valve Schedules: For each piping system to include in maintenance manuals.

PART 2 - PRODUCTS

2.1 EQUIPMENT LABELS

A. Metal Labels for Equipment:

1. Material and Thickness: anodized aluminum, 0.032-inch minimum thickness, and having predrilled or stamped holes for attachment hardware.
2. Letter Color: White.
3. Background Color: Black.
4. Minimum Label Size: Length and width vary for required label content, but not less than

2-1/2 by 3/4 inch.

5. Minimum Letter Size: 1/4 inch for name of units if viewing distance is less than 24 inches, 1/2 inch for viewing distances up to 72 inches, and proportionately larger lettering for greater viewing distances. Include secondary lettering two-thirds to three-quarters the size of principal lettering.
6. Fasteners: Stainless-steel rivets or self-tapping screws.
7. Adhesive: Contact-type permanent adhesive, compatible with label and with substrate.

B. Plastic Labels for Equipment:

1. Material and Thickness: Multilayer, multicolor, plastic labels for mechanical engraving, 1/8 inch thick, and having predrilled holes for attachment hardware.
2. Letter Color: White.
3. Background Color: Black.
4. Maximum Temperature: Able to withstand temperatures up to 160 deg F.
5. Minimum Label Size: Length and width vary for required label content, but not less than 2-1/2 by 3/4 inch.
6. Minimum Letter Size: 1/4 inch for name of units if viewing distance is less than 24 inches, 1/2 inch for viewing distances up to 72 inches, and proportionately larger lettering for greater viewing distances. Include secondary lettering two-thirds to three-quarters the size of principal lettering.
7. Fasteners: Stainless-steel rivets or self-tapping screws.
8. Adhesive: Contact-type permanent adhesive, compatible with label and with substrate.

C. Label Content: Include equipment's Drawing designation or unique equipment number, Drawing numbers where equipment is indicated (plans, details, and schedules), and the Specification Section number and title where equipment is specified.

D. Equipment Label Schedule: For each item of equipment to be labeled, on 8-1/2-by-11-inch bond paper. Tabulate equipment identification number and identify Drawing numbers where equipment is indicated (plans, details, and schedules) and the Specification Section number and title where equipment is specified. Equipment schedule shall be included in operation and maintenance data.

2.2 WARNING SIGNS AND LABELS

A. Material and Thickness: Multilayer, multicolor, plastic labels for mechanical engraving, 1/8 inch thick, and having predrilled holes for attachment hardware.

B. Letter Color: White.

C. Background Color: Red.

D. Maximum Temperature: Able to withstand temperatures up to 160 deg F.

E. Minimum Label Size: Length and width vary for required label content, but not less than 2-1/2 by 3/4 inch.

F. Minimum Letter Size: 1/4 inch for name of units if viewing distance is less than 24 inches, 1/2 inch for viewing distances up to 72 inches, and proportionately larger lettering for greater viewing distances. Include secondary lettering two-thirds to three-quarters the size of principal lettering.

G. Fasteners: Stainless-steel rivets or self-tapping screws.

H. Adhesive: Contact-type permanent adhesive, compatible with label and with substrate.

I. Label Content: Include caution and warning information plus emergency notification instructions.

2.3 PIPE LABELS

A. General Requirements for Manufactured Pipe Labels: Preprinted, color-coded, with lettering indicating service, and showing flow direction.

B. Pretensioned Pipe Labels: Precoiled, semirigid plastic formed to cover full circumference of pipe and to attach to pipe without fasteners or adhesive.

C. Self-Adhesive Pipe Labels: Printed plastic with contact-type, permanent-adhesive backing.

D. Pipe Label Contents: Include identification of piping service using same designations or abbreviations as used on Drawings; also include pipe size and an arrow indicating flow direction.

1. Flow-Direction Arrows: Integral with piping-system service lettering to accommodate both directions or as separate unit on each pipe label to indicate flow direction.
2. Lettering Size: Size letters according to ASME A13.1 for piping.

2.4 STENCILS

A. Stencils for Piping:

1. Lettering Size: Size letters according to ASME A13.1 for piping.
2. Stencil Material: Aluminum.
3. Stencil Paint: Exterior, gloss, acrylic enamel in colors complying with recommendations in ASME A13.1 unless otherwise indicated. Paint may be in pressurized spray-can form.
4. Identification Paint: Exterior, acrylic enamel in colors according to ASME A13.1 unless otherwise indicated. Paint may be in pressurized spray-can form.

2.5 VALVE TAGS

A. Valve Tags: Stamped or engraved with 1/4-inch letters for piping system abbreviation and 1/2-inch numbers.

1. Tag Material: Brass, 0.032-inch aluminum, 0.032-inch or anodized aluminum, 0.032-inch minimum thickness, and having predrilled or stamped holes for attachment hardware.
2. Fasteners: Brass wire-link chain or beaded chain or S-hook.

B. Valve Schedules: For each piping system, on 8-1/2-by-11-inch bond paper. Tabulate valve number, piping system, system abbreviation (as shown on valve tag), location of valve (room or space), normal-operating position (open, closed, or modulating), and variations for identification. Mark valves for emergency shutoff and similar special uses.

1. Valve-tag schedule shall be included in operation and maintenance data.

2.6 WARNING TAGS

A. Description: Preprinted or partially preprinted accident-prevention tags of plasticized card stock with matte finish suitable for writing.

1. Size: 3 by 5-1/4 inches minimum.
2. Fasteners: Reinforced grommet and wire or string.
3. Nomenclature: Large-size primary caption such as "DANGER," "CAUTION," or "DO NOT OPERATE."
4. Color: Safety yellow background with black lettering.

PART 3 - EXECUTION

3.1 PREPARATION

A. Clean piping and equipment surfaces of substances that could impair bond of identification devices, including dirt, oil, grease, release agents, and incompatible primers, paints, and encapsulants.

3.2 GENERAL INSTALLATION REQUIREMENTS

A. Coordinate installation of identifying devices with completion of covering and painting of surfaces where devices are to be applied.

B. Coordinate installation of identifying devices with locations of access panels and doors.

C. Install identifying devices before installing acoustical ceilings and similar concealment.

3.3 EQUIPMENT LABEL INSTALLATION

A. Install or permanently fasten labels on each major item of mechanical equipment.

B. Locate equipment labels where accessible and visible.

3.4 PIPE LABEL INSTALLATION

A. Piping Color Coding: Painting of piping is specified in Section 09 9123 "Interior Painting." or Section 09 9600 "High-Performance Coatings."

B. Stenciled Pipe Label Option: Stenciled labels may be provided instead of manufactured pipe labels, at Installer's option. Install stenciled pipe labels, complying with ASME A13.1on each piping system.

1. Identification Paint: Use for contrasting background.
2. Stencil Paint: Use for pipe marking.

C. Pipe Label Locations: Locate pipe labels where piping is exposed or above accessible ceilings in finished spaces; machine rooms; accessible maintenance spaces such as shafts, tunnels, and plenums; and exterior exposed locations as follows:

1. Near each valve and control device.
2. Near each branch connection, excluding short takeoffs for fixtures and terminal units. Where flow pattern is not obvious, mark each pipe at branch.
3. Near penetrations through walls, floors, ceilings, and inaccessible enclosures.
4. At access doors, manholes, and similar access points that permit view of concealed piping.
5. Near major equipment items and other points of origination and termination.
6. Spaced at maximum intervals of 50 feet along each run. Reduce intervals to 25 feet in areas of congested piping and equipment.
7. On piping above removable acoustical ceilings. Omit intermediately spaced labels.

D. Directional Flow Arrows: Arrows shall be used to indicate direction of flow in pipes, including pipes where flow is allowed in both directions.

E. Pipe Label Color Schedule:

1. Low-Pressure Compressed Air Piping:

   a. Background: Safety blue.
   b. Letter Colors: White.

2. High-Pressure Compressed Air Piping:

   a. Background: Safety blue.
   b. Letter Colors: White.

3. Domestic Water Piping

   a. Background: Safety green.
   b. Letter Colors: White.

4. Sanitary Waste Piping:

   a. Background Color: Safety black.
   b. Letter Color: White.

3.5 VALVE-TAG INSTALLATION

A. Install tags on valves and control devices in piping systems, except check valves, valves within factory-fabricated equipment units, shutoff valves, faucets, convenience and lawn-watering hose connections, and similar roughing-in connections of end-use fixtures and units. List tagged valves in a valve schedule.

B. Valve-Tag Application Schedule: Tag valves according to size, shape, and color scheme and with captions similar to those indicated in the following subparagraphs:

1. Valve-Tag Size and Shape:

   a. Cold Water: 2 inches round.
   b. Hot Water: 2 inches round.
   c. Low-Pressure Compressed Air: 2 inches round.
   d. High-Pressure Compressed Air: 2 inches round.

2. Valve-Tag Colors:

   a. Cold Water: Safety green.
   b. Hot Water: Safety green.
   c. Low-Pressure Compressed Air: Safety blue.
   d. High-Pressure Compressed Air: Natural.

3. Letter Colors:

   a. Cold Water: White.
   b. Hot Water:[White.
   c. Low-Pressure Compressed Air: White.
   d. High-Pressure Compressed Air: White.

3.6 WARNING-TAG INSTALLATION

A. Write required message on, and attach warning tags to, equipment and other items where required.

END OF SECTION

SECTION 22 0716

PLUMBING EQUIPMENT INSULATION

PART 1 - GENERAL

1.1 RELATED DOCUMENTS

A. Drawings and general provisions of the Contract, including General and Supplementary Conditions and Division 01 Specification Sections, apply to this Section.

1.2 SUMMARY

A. Section includes insulating the following plumbing equipment:

1. Domestic water boiler breechings.
2. Domestic water heat exchangers.
3. Domestic water converters.
4. Domestic water, hot-water pumps.
5. Domestic water storage tanks.
6. Domestic water filter housings.

B. Related Sections:

1. Section 22 0719 "Plumbing Piping Insulation."

1.3 ACTION SUBMITTALS

A. Product Data: For each type of product indicated. Include thermal conductivity, water-vapor permeance thickness, and jackets (both factory and field applied, if any).

B. Shop Drawings: Include plans, elevations, sections, details, and attachments to other work.

1. Detail application of protective shields, saddles, and inserts at hangers for each type of insulation and hanger.
2. Detail attachment and covering of heat tracing inside insulation.
3. Detail removable insulation at equipment connections and access panels.
4. Detail application of field-applied jackets.
5. Detail application at linkages of control devices.
6. Detail field application for each equipment type.

C. Samples: For each type of insulation and jacket indicated. Identify each Sample, describing product and intended use. Sample sizes are as follows:

1. Sheet Form Insulation Materials: 12 inches square.
2. Sheet Jacket Materials: 12 inches square.
3. Manufacturer's Color Charts: For products where color is specified, show the full range of colors available for each type of finish material.

1.4 INFORMATIONAL SUBMITTALS

A. Qualification Data: For qualified Installer.

B. Material Test Reports: From a qualified testing agency acceptable to authorities having jurisdiction indicating, interpreting, and certifying test results for compliance of insulation materials, sealers, attachments, cements, and jackets, with requirements indicated. Include dates of tests and test methods employed.

C. Field quality-control reports.

1.5 QUALITY ASSURANCE

A. Installer Qualifications: Skilled mechanics who have successfully completed an apprenticeship program or another craft training program certified by the Department of Labor, Bureau of Apprenticeship and Training.

B. Surface-Burning Characteristics: For insulation and related materials, as determined by testing identical products according to ASTM E 84 by a testing agency acceptable to authorities having jurisdiction. Factory label insulation and jacket materials and adhesive, mastic, tapes, and cement material containers, with appropriate markings of applicable testing agency.

1. Insulation Installed Indoors: Flame-spread index of 25 or less, and smoke-developed index of 50 or less.
2. Insulation Installed Outdoors: Flame-spread index of 75 or less, and smoke-developed index of 150 or less.

1.6 DELIVERY, STORAGE, AND HANDLING

A. Packaging: Insulation material containers shall be marked by manufacturer with appropriate ASTM standard designation, type and grade, and maximum use temperature.

1.7 COORDINATION

A. Coordinate sizes and locations of supports, hangers, and insulation shields specified in Section 22 0529 "Hangers and Supports for Plumbing Piping and Equipment."

B. Coordinate clearance requirements with equipment Installer for equipment insulation application.

C. Coordinate installation and testing of heat tracing.

1.8 SCHEDULING

A. Schedule insulation application after pressure testing systems and, where required, after installing and testing heat tracing. Insulation application may begin on segments that have satisfactory test results.

B. Complete installation and concealment of plastic materials as rapidly as possible in each area of construction.

PART 2 - PRODUCTS

2.1 INSULATION MATERIALS

A. The material descriptions listed in the section may not all be used on this project. Refer to the Insulation Material Schedules on the drawings for the specific application for each product or material. Products not shown on the schedule for the specific application may not be substituted without pre-approval from the Engineer. Where there is a conflict between the drawing schedule and specifications, the drawing schedule shall take precedent.

B. Comply with requirements in "Domestic Water Boiler Breeching Insulation Schedule" and "Equipment Insulation Schedule" articles for where insulating materials shall be applied.

C. Products shall not contain asbestos, lead, mercury, or mercury compounds.

D. Products that come in contact with stainless steel shall have a leachable chloride content of less than 50 ppm when tested according to ASTM C 871.

E. Insulation materials for use on austenitic stainless steel shall be qualified as acceptable according to ASTM C 795.

F. Foam insulation materials shall not use CFC or HCFC blowing agents in the manufacturing process.

G. Calcium Silicate:
   1. Flat-, curved-, and grooved-block sections of noncombustible, inorganic, hydrous calcium silicate with a non-asbestos fibrous reinforcement. Comply with ASTM C 533, Type I.

H. Cellular Glass: Inorganic, incombustible, foamed or cellulated glass with annealed, rigid, hermetically sealed cells. Factory-applied jacket requirements are specified in "Factory-Applied Jackets" Article.
   1. Block Insulation: ASTM C 552, Type I.
   2. Special-Shaped Insulation: ASTM C 552, Type III.
   3. Board Insulation: ASTM C 552, Type IV.
   4. Preformed Pipe Insulation without Jacket: Comply with ASTM C 552, Type II, Class 1.
   5. Preformed Pipe Insulation with Factory-Applied ASJ-SSL: Comply with ASTM C 552, Type II, Class 2.
   6. Factory fabricate shapes according to ASTM C 450 and ASTM C 585.

I. Flexible Elastomeric Insulation: Closed-cell, sponge- or expanded-rubber materials. Comply with ASTM C 534, Type I for tubular materials and Type II for sheet materials.

J. Mineral-Fiber Blanket Insulation: Mineral or glass fibers bonded with a thermosetting resin. Comply with ASTM C 553, Type II and ASTM C 1290, Type I. Factory-applied jacket requirements are specified in "Factory-Applied Jackets" Article.

K. High-Temperature, Mineral-Fiber Blanket Insulation: Mineral or glass fibers bonded with a thermosetting resin. Comply with ASTM C 553, Type V, without factory-applied jacket.

L. Mineral-Fiber Board Insulation: Mineral or glass fibers bonded with a thermosetting resin. Comply with ASTM C 612, Type IA or Type IB. For equipment applications, provide insulation with factory-applied FSK jacket. Factory-applied jacket requirements are specified in "Factory-Applied Jackets" Article.

M. High-Temperature, Mineral-Fiber Board Insulation: Mineral or glass fibers bonded with a thermosetting resin. Comply with ASTM C 612, Type III, without factory-applied jacket.

N. Mineral-Fiber, Preformed Pipe Insulation:
   1. Type I, 850 Deg F Materials: Mineral or glass fibers bonded with a thermosetting resin. Comply with ASTM C 547, Type I, Grade A, with factory-applied ASJ-SSL. Factory-applied jacket requirements are specified in "Factory-Applied Jackets" Article.

O. Mineral-Fiber, Pipe and Tank Insulation: Mineral or glass fibers bonded with a thermosetting resin. Semirigid board material with factory-applied FSK jacket complying with ASTM C 1393, Type II or Type IIIA Category 2, or with properties similar to ASTM C 612, Type IB. Nominal density is 2.5 lb/cu. ft. or more. Thermal conductivity (k-value) at 100 deg F is 0.29 Btu x in./h x sq. ft. x deg F or less. Factory-applied jacket requirements are specified in "Factory-Applied Jackets" Article.

P. Polyolefin: Unicellular, polyethylene thermal plastic insulation. Comply with ASTM C 534 or ASTM C 1427, Type I, Grade 1 for tubular materials and Type II, Grade 1 for sheet materials.

2.2 INSULATING CEMENTS

A. Mineral-Fiber Insulating Cement: Comply with ASTM C 195.

B. Expanded or Exfoliated Vermiculite Insulating Cement: Comply with ASTM C 196.

C. Mineral-Fiber, Hydraulic-Setting Insulating and Finishing Cement: Comply with ASTM C 449.

2.3 ADHESIVES

A. Materials shall be compatible with insulation materials, jackets, and substrates and for bonding insulation to itself and to surfaces to be insulated unless otherwise indicated.

B. Calcium Silicate Adhesive: Fibrous, sodium-silicate-based adhesive with a service temperature range of 50 to 800 deg F.

C. Cellular-Glass Adhesive: Two-component, thermosetting urethane adhesive containing no flammable solvents, with a service temperature range of minus 100 to plus 200 deg F.

D. Flexible Elastomeric and Polyolefin Adhesive: Comply with MIL-A-24179A, Type II, Class I.

E. Mineral-Fiber Adhesive: Comply with MIL-A-3316C, Class 2, Grade A.

F. Grade A for bonding insulation jacket lap seams and joints.

G. PVC Jacket Adhesive: Compatible with PVC jacket.

2.4 MASTICS

A. Materials shall be compatible with insulation materials, jackets, and substrates; comply with MIL-PRF-19565C, Type II.

B. Vapor-Barrier Mastic: Water based; suitable for indoor use on below ambient services.

1. Water-Vapor Permeance: ASTM E 96/E 96M, Procedure B, 0.013 perm at 43-mil dry film thickness.
2. Service Temperature Range: Minus 20 to plus 180 deg F.
3. Solids Content: ASTM D 1644, 58 percent by volume and 70 percent by weight.
4. Color: White.

C. Vapor-Barrier Mastic: Solvent based; suitable for indoor use on below ambient services.
1. Water-Vapor Permeance: ASTM F 1249, 0.05 perm at 35-mil dry film thickness.
2. Service Temperature Range: 0 to 180 deg F.
3. Solids Content: ASTM D 1644, 44 percent by volume and 62 percent by weight.
4. Color: White.

D. Vapor-Barrier Mastic: Solvent based; suitable for outdoor use on below ambient services.
1. Water-Vapor Permeance: ASTM F 1249, 0.05 perm at 30-mil dry film thickness.
2. Service Temperature Range: Minus 50 to plus 220 deg F.
3. Solids Content: ASTM D 1644, 33 percent by volume and 46 percent by weight.
4. Color: White.

E. Breather Mastic: Water based; suitable for indoor and outdoor use on above ambient services.
1. Water-Vapor Permeance: ASTM F 1249, 1.8 perms at 0.0625-inch) dry film thickness.
2. Service Temperature Range: Minus 20 to plus 180 deg F.
3. Solids Content: 60 percent by volume and 66 percent by weight.
4. Color: White.

2.5 LAGGING ADHESIVES

A. Description: Comply with MIL-A-3316C, Class I, Grade A, and shall be compatible with insulation materials, jackets, and substrates.

1. For indoor applications, use lagging adhesives that have a low VOC content.
2. Fire-resistant, water-based lagging adhesive and coating for use indoors to adhere fire-resistant lagging cloths over insulation.
3. Service Temperature Range: 0 to plus 180 deg F.
4. Color: White.

2.6 SEALANTS

A. Joint Sealants for Cellular-Glass Products:
1. Materials shall be compatible with insulation materials, jackets, and substrates.
2. Permanently flexible, elastomeric sealant.
3. Service Temperature Range: Minus 100 to plus 300 deg F.
4. Color: White or gray.

B. FSK and Metal Jacket Flashing Sealants:
1. Materials shall be compatible with insulation materials, jackets, and substrates.
2. Fire- and water-resistant, flexible, elastomeric sealant.
3. Service Temperature Range: Minus 40 to plus 250 deg F.
4. Color: Aluminum.

C. ASJ Flashing Sealants, and Vinyl, PVDC, and PVC Jacket Flashing Sealants:
1. Materials shall be compatible with insulation materials, jackets, and substrates.
2. Fire- and water-resistant, flexible, elastomeric sealant.
3. Service Temperature Range: Minus 40 to plus 250 deg F.

4. Color: White.

2.7 FACTORY-APPLIED JACKETS

A. Insulation system schedules indicate factory-applied jackets on various applications. When factory-applied jackets are indicated, comply with the following:

1. ASJ: White, kraft-paper, fiberglass-reinforced scrim with aluminum-foil backing; complying with ASTM C 1136, Type I.
2. ASJ-SSL: ASJ with self-sealing, pressure-sensitive, acrylic-based adhesive covered by a removable protective strip; complying with ASTM C 1136, Type I.
3. FSK Jacket: Aluminum-foil, fiberglass-reinforced scrim with kraft-paper backing; complying with ASTM C 1136, Type II.
4. PVDC Jacket for Indoor Applications: 4-mil thick, white PVDC biaxially oriented barrier film with a permeance at 0.02 perm when tested according to ASTM E 96/E 96M and with a flame-spread index of 5 and a smoke-developed index of 20 when tested according to ASTM E 84.

5. PVDC Jacket for Outdoor Applications: 6-mil- thick, white PVDC biaxially oriented barrier film with a permeance at 0.01 perm when tested according to ASTM E 96/E 96M and with a flame-spread index of 5 and a smoke-developed index of 25 when tested according to ASTM E 84.

6. PVDC-SSL Jacket: PVDC jacket with a self-sealing, pressure-sensitive, acrylic-based adhesive covered by a removable protective strip.

2.8 FIELD-APPLIED FABRIC-REINFORCING MESH

A. Woven Glass-Fiber Fabric: Approximately 6 oz./sq. yd. with a thread count of 5 strands by 5 strands/sq. in.) for covering equipment.

B. Woven Polyester Fabric: Approximately 1 oz./sq. yd. with a thread count of 10 strands by 10 strands/sq. in. in a Leno weave, for equipment.

2.9 FIELD-APPLIED CLOTHS

A. Woven Glass-Fiber Fabric: Comply with MIL-C-20079H, Type I, plain weave, and presized a minimum of 8 oz./sq. yd..

2.10 FIELD-APPLIED JACKETS

A. Field-applied jackets shall comply with ASTM C 921, Type I, unless otherwise indicated.

B. PVC Jacket: High-impact-resistant, UV-resistant PVC complying with ASTM D 1784, Class 16354-C; thickness as scheduled; roll stock ready for shop or field cutting and forming. Thickness is indicated in field-applied jacket schedules.
1. Adhesive: As recommended by jacket material manufacturer.
2. Color: White or Color as selected by Architect.
3. Factory-fabricated tank heads and tank side panels.

C. Metal Jacket:

1. Aluminum Jacket: Comply with ASTM B 209, Alloy 3003, 3005, 3105, or 5005, Temper H-14.

    a. Sheet and roll stock ready for shop or field sizing or factory cut and rolled to size.
    b. Finish and thickness are indicated in field-applied jacket schedules.
    c. Moisture Barrier for Indoor Applications: 1-mil- thick, heat-bonded polyethylene and kraft.
    d. Moisture Barrier for Outdoor Applications: 3-mil- thick, heat-bonded polyethylene and kraft paper.

2. Stainless-Steel Jacket: ASTM A 167 or ASTM A 240/A 240M.
    a. Material, finish, and thickness are indicated in field-applied jacket schedules.
    b. Moisture Barrier for Indoor Applications: 1-mil thick, heat-bonded polyethylene and kraft paper.
    c. Moisture Barrier for Outdoor Applications: 3-mil thick, heat-bonded polyethylene and kraft paper.

2.11 TAPES

A. ASJ Tape: White vapor-retarder tape matching factory-applied jacket with acrylic adhesive, complying with ASTM C 1136.
    1. Width: 3 inches.
    2. Thickness: 11.5 mils.
    3. Adhesion: 90 ounces force/inch in width.
    4. Elongation: 2 percent.
    5. Tensile Strength: 40 lbf/inch in width.
    6. ASJ Tape Disks and Squares: Precut disks or squares of ASJ tape.

B. FSK Tape: Foil-face, vapor-retarder tape matching factory-applied jacket with acrylic adhesive; complying with ASTM C 1136.
    1. Width: 3 inches.l
    2. Thickness: 6.5 mils.
    3. Adhesion: 90 ounces force/inch in width.
    4. Elongation: 2 percent.
    5. Tensile Strength: 40 lbf/inch in width.
    6. FSK Tape Disks and Squares: Precut disks or squares of FSK tape.

C. PVC Tape: White vapor-retarder tape matching field-applied PVC jacket with acrylic adhesive; suitable for indoor and outdoor applications.
    1. Width: 2 inches.
    2. Thickness: 6 mils.
    3. Adhesion: 64 ounces force/inch in width.
    4. Elongation: 500 percent.
    5. Tensile Strength: 18 lbf/inch in width.

D. Aluminum-Foil Tape: Vapor-retarder tape with acrylic adhesive.
    1. Width: 2 inches.
    2. Thickness: 3.7 mils.
    3. Adhesion: 100 ounces force/inch in width.
    4. Elongation: 5 percent.
    5. Tensile Strength: 34 lbf/inch in width.

E. PVDC Tape: White vapor-retarder PVDC tape with acrylic adhesive.
    1. Width: 3 inches.

2. Film Thickness: 6 mils.
3. Adhesive Thickness: 1.5 mils.
4. Elongation at Break: 145 percent.
5. Tensile Strength: 55 lbf/inch in width.

2.12 SECUREMENTS

A. Bands:
1. Stainless Steel: ASTM A 167 or ASTM A 240/A 240M, Type 304 or Type 316; 0.015 inch thick, 3/4 inch wide with wing seal or closed seal.
2. Aluminum: ASTM B 209, Alloy 3003, 3005, 3105, or 5005; Temper H-14, 0.020 inch thick, 3/4 inch wide with wing seal or closed seal.
3. Springs: Twin spring set constructed of stainless steel with ends flat and slotted to accept metal bands. Spring size determined by manufacturer for application.

B. Insulation Pins and Hangers:

1. Capacitor-Discharge-Weld Pins: Copper- or zinc-coated steel pin, fully annealed for capacitor-discharge welding, 0.135-inch diameter shank, length to suit depth of insulation indicated.

2. Cupped-Head, Capacitor-Discharge-Weld Pins: Copper- or zinc-coated steel pin, fully annealed for capacitor-discharge welding, 0.135-inch diameter shank, length to suit depth of insulation indicated with integral 1-1/2-inch galvanized carbon-steel washer.

3. Metal, Adhesively Attached, Perforated-Base Insulation Hangers: Baseplate welded to projecting spindle that is capable of holding insulation, of thickness indicated, securely in position indicated when self-locking washer is in place.
   a. Baseplate: Perforated, galvanized carbon-steel sheet, 0.030 inch thick by 2 inches square.
   b. Spindle: Stainless steel, fully annealed, 0.106-inch diameter shank, length to suit depth of insulation indicated.
   c. Adhesive: Recommended by hanger manufacturer. Product with demonstrated capability to bond insulation hanger securely to substrates indicated without damaging insulation, hangers, and substrates.

4. Nonmetal, Adhesively Attached, Perforated-Base Insulation Hangers: Baseplate fastened to projecting spindle that is capable of holding insulation, of thickness indicated, securely in position indicated when self-locking washer is in place.
   a. Baseplate: Perforated, nylon sheet, 0.030 inch thick by 1-1/2 inches in diameter.
   b. Spindle: Nylon, 0.106-inch diameter shank, length to suit depth of insulation indicated, up to 2-1/2 inches.
   c. Adhesive: Recommended by hanger manufacturer. Product with demonstrated capability to bond insulation hanger securely to substrates indicated without damaging insulation, hangers, and substrates.

5. Self-Sticking-Base Insulation Hangers: Baseplate welded to projecting spindle that is capable of holding insulation, of thickness indicated, securely in position indicated when self-locking washer is in place.

   a.
   b. Baseplate: Galvanized carbon-steel sheet, 0.030 inch thick by 2 inches square.
   c. Spindle: Stainless steel, fully annealed, 0.106-inch diameter shank, length to suit depth of insulation indicated.

d. Adhesive-backed base with a peel-off protective cover.

6. Insulation-Retaining Washers: Self-locking washers formed from 0.016-inch thick, stainless-steel sheet, with beveled edge sized as required to hold insulation securely in place but not less than 1-1/2 inches in diameter.

a.
b. Protect ends with capped self-locking washers incorporating a spring steel insert to ensure permanent retention of cap in exposed locations.

7. Nonmetal Insulation-Retaining Washers: Self-locking washers formed from 0.016-inch-thick nylon sheet, with beveled edge sized as required to hold insulation securely in place but not less than 1-1/2 inches in diameter.

C. Staples: Outward-clinching insulation staples, nominal 3/4-inch wide, stainless steel or Monel.

D. Wire: 0.062-inch soft-annealed, stainless steel.

2.13 CORNER ANGLES

A. PVC Corner Angles: 30 mils thick, minimum 1 by 1 inch PVC according to ASTM D 1784, Class 16354-C. White or color-coded to match adjacent surface.

B. Aluminum Corner Angles: 0.040 inch thick, minimum 1 by 1 inch aluminum according to ASTM B 209, Alloy 3003, 3005, 3105, or 5005; Temper H-14.

C. Stainless-Steel Corner Angles: 0.024 inch thick, minimum 1 by 1 inch, stainless steel according to ASTM A 167 or ASTM A 240/A 240M, Type 304 or Type 316.

PART 3 - EXECUTION

3.1 EXAMINATION

A. Examine substrates and conditions for compliance with requirements for installation tolerances and other conditions affecting performance of insulation application.

1. Verify that systems and equipment to be insulated have been tested and are free of defects.
2. Verify that surfaces to be insulated are clean and dry.

B. Proceed with installation only after unsatisfactory conditions have been corrected.

3.2 PREPARATION

A. Surface Preparation: Clean and dry surfaces to receive insulation. Remove materials that will adversely affect insulation application.

B. Surface Preparation: Clean and prepare surfaces to be insulated. Before insulating, apply a corrosion coating to insulated surfaces as follows:

1. Stainless Steel: Coat 300 series stainless steel with an epoxy primer 5 mils thick and an epoxy finish 5 mils thick if operating in a temperature range between 140 and 300 deg F. Consult coating manufacturer for appropriate coating materials and application methods for operating temperature range.
2. Carbon Steel: Coat carbon steel operating at a service temperature between 32 and 300 deg F with an epoxy coating. Consult coating manufacturer for appropriate coating materials and application methods for operating temperature range.

C. Coordinate insulation installation with the trade installing heat tracing. Comply with requirements for heat tracing that apply to insulation.

D. Mix insulating cements with clean potable water; if insulating cements are to be in contact with stainless-steel surfaces, use demineralized water.

3.3 GENERAL INSTALLATION REQUIREMENTS

A. Install insulation materials, accessories, and finishes with smooth, straight, and even surfaces; free of voids throughout the length of equipment.

B. Install insulation materials, forms, vapor barriers or retarders, jackets, and thicknesses required for each item as specified in insulation system schedules.

C. Install accessories compatible with insulation materials and suitable for the service. Install accessories that do not corrode, soften, or otherwise attack insulation or jacket in either wet or dry state.

D. Install insulation with longitudinal seams at top and bottom of horizontal runs.

E. Install multiple layers of insulation with longitudinal and end seams staggered.

F. Keep insulation materials dry during application and finishing.

G. Install insulation with tight longitudinal seams and end joints. Bond seams and joints with adhesive recommended by insulation material manufacturer.

H. Install insulation with least number of joints practical.

I. Where vapor barrier is indicated, seal joints, seams, and penetrations in insulation at hangers, supports, anchors, and other projections with vapor-barrier mastic.

1. Install insulation continuously through hangers and around anchor attachments.
2. For insulation application where vapor barriers are indicated, extend insulation on anchor legs from point of attachment to supported item to point of attachment to structure. Taper and seal ends at attachment to structure with vapor-barrier mastic.
3. Install insert materials and install insulation to tightly join the insert. Seal insulation to insulation inserts with adhesive or sealing compound recommended by insulation material manufacturer.
4. Cover inserts with jacket material matching adjacent pipe insulation. Install shields over jacket, arranged to protect jacket from tear or puncture by hanger, support, and shield.

J. Apply adhesives, mastics, and sealants at manufacturer's recommended coverage rate and wet and dry film thicknesses.

K. Install insulation with factory-applied jackets as follows:

1. Draw jacket tight and smooth.
2. Cover circumferential joints with 3-inch wide strips, of same material as insulation jacket. Secure strips with adhesive and outward clinching staples along both edges of strip, spaced 4 inches o.c.
3. Overlap jacket longitudinal seams at least 1-1/2 inches. Install insulation with longitudinal seams at bottom of pipe. Clean and dry surface to receive self-sealing lap. Staple laps with outward clinching staples along edge at 4 inches o.c.

    a. For below ambient services, apply vapor-barrier mastic over staples.

4. Cover joints and seams with tape, according to insulation material manufacturer's written instructions, to maintain vapor seal.
5. Where vapor barriers are indicated, apply vapor-barrier mastic on seams and joints.

L. Cut insulation in a manner to avoid compressing insulation more than 75 percent of its nominal thickness.

M. Finish installation with systems at operating conditions. Repair joint separations and cracking due to thermal movement.

N. Repair damaged insulation facings by applying same facing material over damaged areas. Extend patches at least 4 inches beyond damaged areas. Adhere, staple, and seal patches similar to butt joints.

O. For above ambient services, do not install insulation to the following:

1. Vibration-control devices.
2. Testing agency labels and stamps.
3. Nameplates and data plates.
4. Manholes.
5. Handholes.
6. Cleanouts.

3.4 INSTALLATION OF EQUIPMENT, TANK, AND VESSEL INSULATION

A. Mineral-Fiber, Pipe, and Tank Insulation Installation for Tanks and Vessels: Secure insulation with adhesive and anchor pins and speed washers.

1. Apply adhesives according to manufacturer's recommended coverage rates per unit area, for 100 percent coverage of tank and vessel surfaces.
2. Groove and score insulation materials to fit as closely as possible to equipment, including contours. Bevel insulation edges for cylindrical surfaces for tight joints. Stagger end joints.
3. Protect exposed corners with secured corner angles.
4. Install adhesively attached or self-sticking insulation hangers and speed washers on sides of tanks and vessels as follows:

    a. Do not weld anchor pins to ASME-labeled pressure vessels.
    b. Select insulation hangers and adhesive that are compatible with service temperature and with substrate.
    c. On tanks and vessels, maximum anchor-pin spacing is 3 inches from insulation end joints, and 16 inches o.c. in both directions.
    d. Do not over compress insulation during installation.

e. Cut and miter insulation segments to fit curved sides and domed heads of tanks and vessels.
f. Impale insulation over anchor pins and attach speed washers.
g. Cut excess portion of pins extending beyond speed washers or bend parallel with insulation surface. Cover exposed pins and washers with tape matching insulation facing.

5. Secure each layer of insulation with stainless-steel or aluminum bands. Select band material compatible with insulation materials.
6. Where insulation hangers on equipment and vessels are not permitted or practical and where insulation support rings are not provided, install a girdle network for securing insulation. Stretch prestressed aircraft cable around the diameter of vessel and make taut with clamps, turnbuckles, or breather springs. Place one circumferential girdle around equipment approximately 6 inches from each end. Install wire or cable between two circumferential girdles 12 inches o.c. Install a wire ring around each end and around outer periphery of center openings, and stretch prestressed aircraft cable radially from the wire ring to nearest circumferential girdle. Install additional circumferential girdles along the body of equipment or tank at a minimum spacing of 48 inches o.c. Use this network for securing insulation with tie wire or bands.
7. Stagger joints between insulation layers at least 3 inches.
8. Install insulation in removable segments on equipment access doors, manholes, handholes, and other elements that require frequent removal for service and inspection.
9. Bevel and seal insulation ends around manholes, handholes, ASME stamps, and nameplates.
10. For equipment with surface temperatures below ambient, apply mastic to open ends, joints, seams, breaks, and punctures in insulation.

B. Flexible Elastomeric Thermal Insulation Installation for Tanks and Vessels: Install insulation over entire surface of tanks and vessels.

1. Apply 100 percent coverage of adhesive to surface with manufacturer's recommended adhesive.
2. Seal longitudinal seams and end joints.

C. Insulation Installation on Pumps:

1. Fabricate metal boxes lined with insulation. Fit boxes around pumps and coincide box joints with splits in pump casings. Fabricate joints with outward bolted flanges. Bolt flanges on 6-inch centers, starting at corners. Install 3/8-inch diameter fasteners with wing nuts. Alternatively, secure the box sections together using a latching mechanism.
2. Fabricate boxes from stainless steel, at least 0.050 inch thick.
3. For below ambient services, install a vapor barrier at seams, joints, and penetrations. Seal between flanges with replaceable gasket material to form a vapor barrier.

3.5 INSTALLATION OF CALCIUM SILICATE INSULATION

A. Insulation Installation on Domestic Water Boiler Breechings:

1. Secure single-layer insulation with stainless-steel bands at 12-inch intervals and tighten bands without deforming insulation material.
2. Install two-layer insulation with joints tightly butted and staggered at least 3 inches. Secure inner layer with wire spaced at 12-inch intervals. Secure outer layer with stainless-steel bands at 12-inch intervals.

3. On exposed applications without metal jacket, finish insulation surface with a skim coat of mineral-fiber, hydraulic-setting cement. When cement is dry, apply flood coat of lagging adhesive and press on one layer of glass cloth. Overlap edges at least 1 inch. Apply finish coat of lagging adhesive over glass cloth. Thin finish coat to achieve smooth, uniform finish.

3.6 INSTALLATION OF FLEXIBLE ELASTOMERIC INSULATION

A. Seal longitudinal seams and end joints with manufacturer's recommended adhesive to eliminate openings in insulation that allow passage of air to surface being insulated.

3.7 FIELD-APPLIED JACKET INSTALLATION

A. Where glass-cloth jackets are indicated, install directly over bare insulation or insulation with factory-applied jackets.

1. Draw jacket smooth and tight to surface with 2-inch overlap at seams and joints.
2. Embed glass cloth between two 0.062-inch thick coats of lagging adhesive.
3. Completely encapsulate insulation with coating, leaving no exposed insulation.

B. Where FSK jackets are indicated, install as follows:

1. Draw jacket material smooth and tight.
2. Install lap or joint strips with same material as jacket.
3. Secure jacket to insulation with manufacturer's recommended adhesive.
4. Install jacket with 1-1/2-inch laps at longitudinal seams and 3-inch wide joint strips at end joints.
5. Seal openings, punctures, and breaks in vapor-retarder jackets and exposed insulation with vapor-barrier mastic.

C. Where PVC jackets are indicated, install with 1-inch overlap at longitudinal seams and end joints; for horizontal applications, install with longitudinal seams along top and bottom of tanks and vessels. Seal with manufacturer's recommended adhesive.

1. Apply two continuous beads of adhesive to seams and joints, one bead under lap and the finish bead along seam and joint edge.

D. Where metal jackets are indicated, install with 2-inch overlap at longitudinal seams and end joints. Overlap longitudinal seams arranged to shed water. Seal end joints with weatherproof sealant recommended by insulation manufacturer. Secure jacket with stainless-steel bands 12 inches o.c. and at end joints.

E. Where PVDC jackets are indicated, install as follows:

1. Jacket can be wrapped in cigarette fashion along length of roll for insulation systems with an outer circumference of 33-1/2 inches or less. 33-1/2-inch circumference limit allows for 2-inch overlap seal. Using the length of roll allows for longer sections of jacket to be installed at one time. Use adhesive on the lap seal. Visually inspect lap seal for "fishmouthing," and use PVDC tape along lap seal to secure joint.
2. Repair holes or tears in PVDC jacket by placing PVDC tape over the hole or tear and wrapping a minimum of 1-1/4 circumferences to avoid damage to tape edges.

3.8 FINISHES

A. Insulation with ASJ, Glass-Cloth, or Other Paintable Jacket Material: Paint jacket with paint system identified below and as specified in Section 09 9113 "Exterior Painting" and Section 09 9123 "Interior Painting."

1. Flat Acrylic Finish: Two finish coats over a primer that is compatible with jacket material and finish coat paint. Add fungicidal agent to render fabric mildew proof.

a. Finish Coat Material: Interior, flat, latex-emulsion size.

B. Flexible Elastomeric Thermal Insulation: After adhesive has fully cured, apply two coats of insulation manufacturer's recommended protective coating.

C. Color: Final color as selected by Architect. Vary first and second coats to allow visual inspection of the completed Work.

D. Do not field paint aluminum or stainless-steel jackets.

3.9 FIELD QUALITY CONTROL

A. Testing Agency: Engage a qualified testing agency to perform tests and inspections.

B. Perform tests and inspections.

C. Tests and Inspections:

1. Inspect field-insulated equipment, randomly selected by Architect, by removing field-applied jacket and insulation in layers in reverse order of their installation. Extent of inspection shall be limited to one location(s) for each type of equipment defined in the "Equipment Insulation Schedule" Article. For large equipment, remove only a portion adequate to determine compliance.

D. All insulation applications will be considered defective Work if sample inspection reveals noncompliance with requirements.

3.10 DOMESTIC WATER BOILER BREECHING INSULATION SCHEDULE

A. Round, exposed breeching and connector insulation shall be one of the following:

1. Calcium Silicate: 4 inches thick.
2. High-Temperature Mineral-Fiber Blanket: 3 inches thick and 3-lb/cu. ft. nominal density.
3. High-Temperature Mineral-Fiber Board: 3 inches thick and 6-lb/cu. ft. nominal density.

B. Round, concealed breeching and connector insulation shall be one of the following:

1. Calcium Silicate: 4 inches thick.
2. High-Temperature Mineral-Fiber Blanket: 3 inches thick and 3-lb/cu. ft. nominal density.
3. High-Temperature Mineral-Fiber Board: 3 inches thick and 6-lb/cu. ft. nominal density.

C. Rectangular, exposed breeching and connector insulation shall be one of the following:

1. Calcium Silicate: 4 inches thick.

2. High-Temperature Mineral-Fiber Blanket: 3 inches thick and 3-lb/cu. ft. nominal density.
3. High-Temperature Mineral-Fiber Board: 3 inches thick and 6-lb/cu. ft. nominal density.

D. Rectangular, concealed breeching and connector insulation shall be one of the following:

1. Calcium Silicate: 4 inches thick.
2. High-Temperature Mineral-Fiber Blanket: 3 inches thick and 3-lb/cu. ft. nominal density.
3. High-Temperature Mineral-Fiber Board: 3 inches thick and 6-lb/cu. ft. nominal density.

3.11 EQUIPMENT INSULATION SCHEDULE

A. Insulation materials and thicknesses are identified below. If more than one material is listed for a type of equipment, selection from materials listed is Contractor's option.

B. Insulate indoor and outdoor equipment that is not factory insulated.

C. Heat-exchanger (water-to-water for domestic water heating service) insulation shall be one of the following:

1. Calcium Silicate: 3 inches thick.
2. Cellular Glass: 3 inches thick.
3. Mineral-Fiber Blanket: 2 inches thick and 6-lb/cu. ft. nominal density.
4. Mineral-Fiber Board: 6-lb/cu. ft. nominal density.
5. Mineral-Fiber Pipe and Tank: 2 inches thick.
6. Mineral-Fiber Preformed Pipe Insulation, Type I: 2 inches thick.

D. Steam-to-hot-water converter insulation shall be one of the following:

1. Calcium Silicate: inches thick.
2. Cellular Glass: 3 inches thick.
3. Mineral-Fiber Blanket: 2 inches thick and 6-lb/cu. ft. nominal density.
4. Mineral-Fiber Board: 6-lb/cu. ft. nominal density.
5. Mineral-Fiber Pipe and Tank: 2 inches thick.
6. Mineral-Fiber Preformed Pipe Insulation, Type I: 2 inches thick.

E. Domestic water pump insulation shall be one of the following:

1. Cellular Glass: 2 inches thick.
2. Mineral-Fiber Blanket: 1 inch thick 6-lb/cu. Ft nominal density.
3. Mineral-Fiber Board: 1 inch thick and 6-lb/cu. ft. nominal density.

F. Domestic chilled-water (potable) pump insulation shall be one of the following:

1. Cellular Glass: 3 inches thick.
2. Mineral-Fiber Blanket: 2 inches thick and 6-lb/cu. ft. nominal density.
3. Mineral-Fiber Board: 2 inches thick and 6-lb/cu. ft. nominal density.

G. Domestic hot-water pump insulation shall be one of the following:

1. Cellular Glass: 2 inches thick.
2. Mineral-Fiber Blanket: 1 inch thick and 6-lb/cu. ft. nominal density.
3. Mineral-Fiber Board: 1 inch 6-lb/cu. ft. nominal density.

H. Domestic water, domestic chilled-water (potable), and domestic hot-water hydropneumatic tank insulation shall be one of the following:

1. Cellular Glass: 1-1/2 inches thick.
2. Flexible Elastomeric: 1 inch thick.
3. Mineral-Fiber Blanket: 1 thick and 6-lb/cu. ft. nominal density.
4. Mineral-Fiber Board: 1 inch thick and 6-lb/cu. Ft nominal density.
5. Mineral-Fiber Pipe and Tank: 1 inch thick.
6. Polyolefin: 1 inch thick.

I. Domestic hot-water storage tank insulation shall be one of the following, of thickness to provide an R-value of 12.5.

1. Cellular glass.
2. Mineral-Fiber Blanket: 6-lb/cu. ft. nominal density.
3. Mineral-Fiber Board: 6-lb/cu. ft. nominal density.
4. Mineral-fiber pipe and tank.

J. Domestic water storage tank insulation shall be one of the following:

1. Cellular Glass: 2 inches thick.
2. Flexible Elastomeric: 1 inch thick.
3. Mineral-Fiber Blanket: 1 inch thick and 6-lb/cu. ft. nominal density.
4. Mineral-Fiber Board: 1 inch thick and 6-lb/cu. ft. nominal density.
5. Mineral-Fiber Pipe and Tank: 1 inch thick.
6. Polyolefin: 1 inch thick.

K. Domestic chilled-water (potable) storage tank insulation shall be one of the following:

1. Cellular Glass: 2 inches thick.
2. Flexible Elastomeric: 1 inch thick.
3. Mineral-Fiber Blanket: 1 inch thick 6-lb/cu. ft. nominal density.
4. Mineral-Fiber Board: 1 inch thick and 6-lb/cu. ft. nominal density.
5. Mineral-Fiber Pipe and Tank: 1 inch thick.
6. Polyolefin: 1 inch thick.

L. Domestic water filter-housing insulation shall be one of the following:

1. Cellular Glass: 3 inches thick.
2. Mineral-Fiber Blanket: 2 inches thick and 6-lb/cu. ft. nominal density.
3. Mineral-Fiber Board: 2 inches thick and 6-lb/cu. ft. nominal density.
4. Mineral-Fiber Pipe and Tank: 2 inches thick.

3.12 INDOOR, FIELD-APPLIED JACKET SCHEDULE

A. Install jacket over insulation material. For insulation with factory-applied jacket, install the field-applied jacket over the factory-applied jacket.

B. If more than one material is listed, selection from materials listed is Contractor's option.

C. Equipment, Concealed:
1. PVC, Color-Coded by System: 30 mils thick.
2. Aluminum, Stucco Embossed: 0.020 inch thick.
3. Painted Aluminum, Embossed: 0.020 inch thick.

4. Stainless Steel, Type 304 or Type 316, Stucco Embossed: 0.020 inch 0.024 inch thick.

D. Equipment, Exposed, up to 48 Inches in Diameter or with Flat Surfaces up to 72 Inches

1. None.
2. PVC, Color-Coded by System: 30 mils thick.
3. Aluminum, Stucco Embossed: 0.032 inch thick.
4. Painted Aluminum, Stucco Embossed: 0.032 inch thick.
5. Stainless Steel, Type 304 or Type 316, Stucco Embossed: 0.024 inch thick.

E. Equipment, Exposed, Larger Than 48 Inches in Diameter or with Flat Surfaces Larger Than 72 Inches:
1. Painted Aluminum, Stucco Embossed: 0.032 inch thick.
2. Stainless Steel, Type 304 or Type 316, Stucco Embossed: 0.024 inch thick.

3.13 OUTDOOR, FIELD-APPLIED JACKET SCHEDULE

A. Install jacket over insulation material. For insulation with factory-applied jacket, install the field-applied jacket over the factory-applied jacket.

B. If more than one material is listed, selection from materials listed is Contractor's option.

C. Equipment, Concealed:
1. PVC, Color-Coded by System: 30 mils thick.
2. Aluminum, Stucco Embossed: 0.032 inch thick.
3. Painted Aluminum, Stucco Embossed 0.032 inch thick.
4. Stainless Steel, Type 304 or Type 316, Stucco Embossed: 0.024 inch thick.

D. Equipment, Exposed, up to 48 Inches in Diameter or with Flat Surfaces up to 72 Inches:

1. Aluminum, Stucco Embossed with Z-Shaped Locking Seam: 0.032 inch thick.
2. Stainless Steel, Type 304 or Type 316, Stucco Embossed with Z-Shaped Locking Seam: 0.024 inch thick.

E. Equipment, Exposed, Larger Than 48 Inches in Diameter or with Flat Surfaces Larger Than 72 Inches:

1. Aluminum, Stucco Embossed: 0.032 inch thick.
2. Stainless Steel, Type 304 or Type 316, Stucco Embossed 0.024 inch thick.

END OF SECTION

SECTION 22 0719

PLUMBING PIPING INSULATION

PART 1 - GENERAL

1.1 RELATED DOCUMENTS

A. Drawings and general provisions of the Contract, including General and Supplementary Conditions and Division 01 Specification Sections, apply to this Section.

1.2 SUMMARY

A. Section includes insulating the following plumbing piping services:

1. Domestic cold-water piping.
2. Domestic hot-water piping.
3. Domestic recirculating hot-water piping.
4. Domestic chilled-water piping for drinking fountains.
5. Sanitary waste piping exposed to freezing conditions.
6. Storm-water piping exposed to freezing conditions.
7. Roof drains and rainwater leaders.
8. Supplies and drains for handicap-accessible lavatories and sinks.

B. Related Sections:

1. Section 22 0716 "Plumbing Equipment Insulation."

1.3 ACTION SUBMITTALS

A. Product Data: For each type of product indicated. Include thermal conductivity, water-vapor permeance thickness, and jackets (both factory- and field-applied, if any).

B. Shop Drawings: Include plans, elevations, sections, details, and attachments to other work.

1. Detail application of protective shields, saddles, and inserts at hangers for each type of insulation and hanger.
2. Detail attachment and covering of heat tracing inside insulation.
3. Detail insulation application at pipe expansion joints for each type of insulation.
4. Detail insulation application at elbows, fittings, flanges, valves, and specialties for each type of insulation.
5. Detail removable insulation at piping specialties, equipment connections, and access panels.
6. Detail application of field-applied jackets.
7. Detail application at linkages of control devices.

C. Samples: For each type of insulation and jacket indicated. Identify each Sample, describing product and intended use. Sample sizes are as follows:

1. Preformed Pipe Insulation Materials: 12 inches long by NPS 2.

2. Jacket Materials for Pipe: 12 inches long by NPS 2.
3. Sheet Jacket Materials: 12 inches square.
4. Manufacturer's Color Charts: For products where color is specified, show the full range of colors available for each type of finish material.

1.4 INFORMATIONAL SUBMITTALS

A. Qualification Data: For qualified Installer.

B. Material Test Reports: From a qualified testing agency acceptable to authorities having jurisdiction indicating, interpreting, and certifying test results for compliance of insulation materials, sealers, attachments, cements, and jackets, with requirements indicated. Include dates of tests and test methods employed.

C. Field quality-control reports.

1.5 QUALITY ASSURANCE

A. Installer Qualifications: Skilled mechanics who have successfully completed an apprenticeship program or another craft training program certified by the Department of Labor, Bureau of Apprenticeship and Training.

B. Surface-Burning Characteristics: For insulation and related materials, as determined by testing identical products according to ASTM E 84 by a testing agency acceptable to authorities having jurisdiction. Factory label insulation and jacket materials and adhesive, mastic, tapes, and cement material containers, with appropriate markings of applicable testing agency.

1. Insulation Installed Indoors: Flame-spread index of 25 or less, and smoke-developed index of 50 or less.
2. Insulation Installed Outdoors: Flame-spread index of 75 or less, and smoke-developed index of 150 or less.

C. Mockups: Before installing insulation, build mockups for each type of insulation and finish listed below to demonstrate quality of insulation application and finishes. Build mockups in the location indicated or, if not indicated, as directed by Architect. Use materials indicated for the completed Work.

1. Piping Mockups:

    a. One 10-foot section of NPS 2 straight pipe.
    b. One each of a 90-degree threaded, welded, and flanged elbow.
    c. One each of a threaded, welded, and flanged tee fitting.
    d. One NPS 2 or smaller valve, and one NPS 2-1/2 or larger valve.
    e. Four support hangers including hanger shield and insert.
    f. One threaded strainer and one flanged strainer with removable portion of insulation.
    g. One threaded reducer and one welded reducer.
    h. One pressure temperature tap.
    i. One mechanical coupling.

2. For each mockup, fabricate cutaway sections to allow observation of application details for insulation materials, adhesives, mastics, attachments, and jackets.

3. Notify Architect seven days in advance of dates and times when mockups will be constructed.
4. Obtain Architect's approval of mockups before starting insulation application.
5. Approval of mockups does not constitute approval of deviations from the Contract Documents contained in mockups unless Architect specifically approves such deviations in writing.
6. Maintain mockups during construction in an undisturbed condition as a standard for judging the completed Work.
7. Demolish and remove mockups when directed.

D. Comply with the following applicable standards and other requirements specified for miscellaneous components:

1. Supply and Drain Protective Shielding Guards: ICC A117.1.

1.6 DELIVERY, STORAGE, AND HANDLING

A. Packaging: Insulation material containers shall be marked by manufacturer with appropriate ASTM standard designation, type and grade, and maximum use temperature.

1.7 COORDINATION

A. Coordinate sizes and locations of supports, hangers, and insulation shields specified in Section 22 0529 "Hangers and Supports for Plumbing Piping and Equipment."

B. Coordinate clearance requirements with piping Installer for piping insulation application. Before preparing piping Shop Drawings, establish and maintain clearance requirements for installation of insulation and field-applied jackets and finishes and for space required for maintenance.

C. Coordinate installation and testing of heat tracing.

1.8 SCHEDULING

A. Schedule insulation application after pressure testing systems and, where required, after installing and testing heat tracing. Insulation application may begin on segments that have satisfactory test results.

B. Complete installation and concealment of plastic materials as rapidly as possible in each area of construction.

PART 2 - PRODUCTS

2.1 INSULATION MATERIALS

A. The product descriptions listed in the section may not all be used on this project. Refer to the Piping Insulation Material Schedules on the drawings for the specific application for each product or material. Products not shown on the schedule for the specific application may not be substituted without pre-approval from the Engineer. Where there is a conflict between the drawing schedule and specifications, the drawing schedule shall take precedent.

B. Products shall not contain asbestos, lead, mercury, or mercury compounds.

C. Products that come in contact with stainless steel shall have a leachable chloride content of less than 50 ppm when tested according to ASTM C 871.

D. Insulation materials for use on austenitic stainless steel shall be qualified as acceptable according to ASTM C 795.

E. Foam insulation materials shall not use CFC or HCFC blowing agents in the manufacturing process.

F. Cellular Glass: Inorganic, incombustible, foamed or cellulated glass with annealed, rigid, hermetically sealed cells. Factory-applied jacket requirements are specified in "Factory-Applied Jackets" Article.
   1. Block Insulation: ASTM C 552, Type I.
   2. Special-Shaped Insulation: ASTM C 552, Type III.
   3. Preformed Pipe Insulation without Jacket: Comply with ASTM C 552, Type II, Class 1.
   4. Preformed Pipe Insulation with Factory-Applied ASJ-SSL: Comply with ASTM C 552, Type II, Class 2.
   5. Factory fabricate shapes according to ASTM C 450 and ASTM C 585.

G. Flexible Elastomeric Insulation: Closed-cell, sponge- or expanded-rubber materials. Comply with ASTM C 534, Type I for tubular materials.

H. Mineral-Fiber Blanket Insulation: Mineral or glass fibers bonded with a thermosetting resin. Comply with ASTM C 553, Type II and ASTM C 1290, Type I. Factory-applied jacket requirements are specified in "Factory-Applied Jackets" Article.

I. Mineral-Fiber, Preformed Pipe Insulation:
   1. Type I, 850 Deg F Materials: Mineral or glass fibers bonded with a thermosetting resin. Comply with ASTM C 547, Type I, Grade A, with factory-applied ASJ. Factory-applied jacket requirements are specified in "Factory-Applied Jackets" Article.

J. Phenolic:
   1. Preformed pipe insulation of rigid, expanded, closed-cell structure. Comply with ASTM C 1126, Type III, Grade 1.
   2. Block insulation of rigid, expanded, closed-cell structure. Comply with ASTM C 1126, Type II, Grade 1.
   3. Factory fabricate shapes according to ASTM C 450 and ASTM C 585.
   4. Factory-Applied Jacket: ASJ. Requirements are specified in "Factory-Applied Jackets" Article.

K. Polyolefin: Unicellular, polyethylene thermal plastic insulation. Comply with ASTM C 534 or ASTM C 1427, Type I, Grade 1 for tubular materials.

2.2 INSULATING CEMENTS

A. Mineral-Fiber Insulating Cement: Comply with ASTM C 195.

B. Expanded or Exfoliated Vermiculite Insulating Cement: Comply with ASTM C 196.

C. Mineral-Fiber, Hydraulic-Setting Insulating and Finishing Cement: Comply with ASTM C 449.

2.3 ADHESIVES

A. Materials shall be compatible with insulation materials, jackets, and substrates and for bonding insulation to itself and to surfaces to be insulated, unless otherwise indicated.

B. Cellular-Glass Adhesive: Two-component, thermosetting urethane adhesive containing no flammable solvents, with a service temperature range of minus 100 to plus 200 deg F.

C. Flexible Elastomeric and Polyolefin Adhesive: Comply with MIL-A-24179A, Type II, Class I.

D. Mineral-Fiber Adhesive: Comply with MIL-A-3316C, Class 2, Grade A.

E. Phenolic Adhesive: Solvent-based resin adhesive, with a service temperature range of minus 75 to plus 300 deg F.

F. ASJ Adhesive, and FSK Jacket Adhesive: Comply with MIL-A-3316C, Class 2, Grade A for bonding insulation jacket lap seams and joints.

G. PVC Jacket Adhesive: Compatible with PVC jacket.

2.4 MASTICS

A. Materials shall be compatible with insulation materials, jackets, and substrates; comply with MIL-PRF-19565C, Type II.

B. Vapor-Barrier Mastic: Water based; suitable for indoor use on below-ambient services.
   1. Water-Vapor Permeance: ASTM E 96/E 96M, Procedure B, 0.013 perm at 43-mil dry film thickness.
   2. Service Temperature Range: Minus 20 to plus 180 deg F.
   3. Solids Content: ASTM D 1644, 58 percent by volume and 70 percent by weight.
   4. Color: White.

C. Vapor-Barrier Mastic: Solvent based; suitable for indoor use on below-ambient services.
   1. Water-Vapor Permeance: ASTM F 1249, 0.05 perm at 35-mil dry film thickness.
   2. Service Temperature Range: 0 to 180 deg F
   3. Solids Content: ASTM D 1644, 44 percent by volume and 62 percent by weight.
   4. Color: White.

D. Vapor-Barrier Mastic: Solvent based; suitable for outdoor use on below-ambient services.
   1. Water-Vapor Permeance: ASTM F 1249, 0.05 perm at 30-mil dry film thickness.
   2. Service Temperature Range: Minus 50 to plus 220 deg F.
   3. Solids Content: ASTM D 1644, 33 percent by volume and 46 percent by weight.
   4. Color: White.

E. Breather Mastic: Water based; suitable for indoor and outdoor use on above-ambient services.
   1. Water-Vapor Permeance: ASTM F 1249, 1.8 perms at 0.0625-inch dry film thickness.
   2. Service Temperature Range: Minus 20 to plus 180 deg F.
   3. Solids Content: 60 percent by volume and 66 percent by weight.
   4. Color: White.

2.5 LAGGING ADHESIVES

A. Description: Comply with MIL-A-3316C, Class I, Grade A, and shall be compatible with insulation materials, jackets, and substrates.

1. For indoor applications, use lagging adhesives that have a VOC content of 50 g/L or less when calculated according to 40 CFR 59, Subpart D (EPA Method 24).
2. Fire-resistant, water-based lagging adhesive and coating for use indoors to adhere fire-resistant lagging cloths over pipe insulation.
3. Service Temperature Range: 0 to plus 180 deg F.
4. Color: White.

2.6 SEALANTS

A. Joint Sealants for Cellular-Glass and Phenolic Products:
1. Materials shall be compatible with insulation materials, jackets, and substrates.
2. Permanently flexible, elastomeric sealant.
3. Service Temperature Range: Minus 100 to plus 300 deg F.
4. Color: White or gray.

B. FSK and Metal Jacket Flashing Sealants:
1. Materials shall be compatible with insulation materials, jackets, and substrates.
2. Fire- and water-resistant, flexible, elastomeric sealant.
3. Service Temperature Range: Minus 40 to plus 250 deg F.
4. Color: Aluminum.

C. ASJ Flashing Sealants, and Vinyl, PVDC, and PVC Jacket Flashing Sealants:
1. Materials shall be compatible with insulation materials, jackets, and substrates.
2. Fire- and water-resistant, flexible, elastomeric sealant.
3. Service Temperature Range: Minus 40 to plus 250 deg F.
4. Color: White.

2.7 FACTORY-APPLIED JACKETS

A. Insulation system schedules indicate factory-applied jackets on various applications. When factory-applied jackets are indicated, comply with the following:

1. ASJ: White, kraft-paper, fiberglass-reinforced scrim with aluminum-foil backing; complying with ASTM C 1136, Type I.
2. ASJ-SSL: ASJ with self-sealing, pressure-sensitive, acrylic-based adhesive covered by a removable protective strip; complying with ASTM C 1136, Type I.
3. FSK Jacket: Aluminum-foil, fiberglass-reinforced scrim with kraft-paper backing; complying with ASTM C 1136, Type II.

2.8 FIELD-APPLIED FABRIC-REINFORCING MESH

A. Woven Glass-Fiber Fabric: Approximately 2 oz./sq. yd. with a thread count of 10 strands by 10 strands/sq. in. for covering pipe and pipe fittings.

B. Woven Polyester Fabric: Approximately 1 oz./sq. yd. with a thread count of 10 strands by 10 strands/sq. in., in a Leno weave, for pipe.

2.9 FIELD-APPLIED CLOTHS

A. Woven Glass-Fiber Fabric: Comply with MIL-C-20079H, Type I, plain weave, and presized a minimum of 8 oz./sq. yd.

2.10 FIELD-APPLIED JACKETS

A. Field-applied jackets shall comply with ASTM C 921, Type I, unless otherwise indicated.

B. PVC Jacket: High-impact-resistant, UV-resistant PVC complying with ASTM D 1784, Class 16354-C; thickness as scheduled; roll stock ready for shop or field cutting and forming. Thickness is indicated in field-applied jacket schedules.
   1. Adhesive: As recommended by jacket material manufacturer.
   2. Color: Color-code jackets based on system or Color as selected by Architect.
   3. Factory-fabricated fitting covers to match jacket if available; otherwise, field fabricate.

      a. Shapes: 45- and 90-degree, short- and long-radius elbows, tees, valves, flanges, unions, reducers, end caps, soil-pipe hubs, traps, mechanical joints, and P-trap and supply covers for lavatories.

C. Metal Jacket:
   1. Aluminum Jacket: Comply with ASTM B 209, Alloy 3003, 3005, 3105, or 5005, Temper H-14.

      a. Factory cut and rolled to size.
      b. Finish and thickness are indicated in field-applied jacket schedules.
      c. Moisture Barrier for Indoor Applications: 3-mil thick, heat-bonded polyethylene and kraft paper.
      d. Moisture Barrier for Outdoor Applications: 3-mil thick, heat-bonded polyethylene and kraft paper.
      e. Factory-Fabricated Fitting Covers:

         1) Same material, finish, and thickness as jacket.
         2) Preformed 2-piece or gore, 45- and 90-degree, short- and long-radius elbows.
         3) Tee covers.
         4) Flange and union covers.
         5) End caps.
         6) Beveled collars.
         7) Valve covers.
         8) Field fabricate fitting covers only if factory-fabricated fitting covers are not available.

   2. Stainless-Steel Jacket: ASTM A 167 or ASTM A 240/A 240M.

      a. Factory cut and rolled to size.
      b. Material, finish, and thickness are indicated in field-applied jacket schedules.
      c. Moisture Barrier for Indoor Applications: 3-mil thick, heat-bonded polyethylene and kraft paper.
      d. Moisture Barrier for Outdoor Applications: 3-mil thick, heat-bonded polyethylene and kraft paper.
      e. Factory-Fabricated Fitting Covers:

         1) Same material, finish, and thickness as jacket.

2) Preformed 2-piece or gore, 45- and 90-degree, short- and long-radius elbows.
3) Tee covers.
4) Flange and union covers.
5) End caps.
6) Beveled collars.
7) Valve covers.
8) Field fabricate fitting covers only if factory-fabricated fitting covers are not available.

D. Underground Direct-Buried Jacket: 125-mil thick vapor barrier and waterproofing membrane consisting of a rubberized bituminous resin reinforced with a woven-glass fiber or polyester scrim and laminated aluminum foil.

2.11 TAPES

A. ASJ Tape: White vapor-retarder tape matching factory-applied jacket with acrylic adhesive, complying with ASTM C 1136.
1. Width: 3 inches.
2. Thickness: 11.5 mils.
3. Adhesion: 90 ounces force/inch in width.
4. Elongation: 2 percent.
5. Tensile Strength: 40 lbf/inch in width.
6. ASJ Tape Disks and Squares: Precut disks or squares of ASJ tape.

B. FSK Tape: Foil-face, vapor-retarder tape matching factory-applied jacket with acrylic adhesive; complying with ASTM C 1136.
1. Width: 3 inches.
2. Thickness: 6.5 mils.
3. Adhesion: 90 ounces force/inch in width.
4. Elongation: 2 percent.
5. Tensile Strength: 40 lbf/inch in width.
6. FSK Tape Disks and Squares: Precut disks or squares of FSK tape.

C. PVC Tape: White vapor-retarder tape matching field-applied PVC jacket with acrylic adhesive; suitable for indoor and outdoor applications.
1. Width: 2 inches.
2. Thickness: 6 mils.
3. Adhesion: 64 ounces force/inch in width.
4. Elongation: 500 percent.
5. Tensile Strength: 18 lbf/inch in width.

D. Aluminum-Foil Tape: Vapor-retarder tape with acrylic adhesive.
1. Width: 2 inches.
2. Thickness: 3.7 mils.
3. Adhesion: 100 ounces force/inch in width.
4. Elongation: 5 percent.
5. Tensile Strength: 34 lbf/inch in width.

2.12 SECUREMENTS

A. Bands:

1. Stainless Steel: ASTM A 167 or ASTM A 240/A 240M, Type 304 or Type 316; 0.015 inch thick, 3/4 inch wide with closed seal.
2. Aluminum: ASTM B 209, Alloy 3003, 3005, 3105, or 5005; Temper H-14, 0.020 inch thick, 3/4 inch closed seal.

B. Staples: Outward-clinching insulation staples, nominal 3/4-inch wide, stainless steel or Monel.

C. Wire: 0.062-inch soft-annealed, stainless steel.

2.13 PROTECTIVE SHIELDING GUARDS

A. Protective Shielding Pipe Covers
1. Description: Manufactured plastic wraps for covering plumbing fixture hot-water supply and trap and drain piping. Comply with Americans with Disabilities Act (ADA) requirements.

B. Protective Shielding Piping Enclosures
1. Description: Manufactured plastic enclosure for covering plumbing fixture hot- and cold-water supplies and trap and drain piping. Comply with ADA requirements.

PART 3 - EXECUTION

3.1 EXAMINATION

A. Examine substrates and conditions for compliance with requirements for installation tolerances and other conditions affecting performance of insulation application.

1. Verify that systems to be insulated have been tested and are free of defects.
2. Verify that surfaces to be insulated are clean and dry.

B. Proceed with installation only after unsatisfactory conditions have been corrected.

3.2 PREPARATION

A. Surface Preparation: Clean and dry surfaces to receive insulation. Remove materials that will adversely affect insulation application.

B. Surface Preparation: Clean and prepare surfaces to be insulated. Before insulating, apply a corrosion coating to insulated surfaces as follows:

1. Stainless Steel: Coat 300 series stainless steel with an epoxy primer 5 mils thick and an epoxy finish 5 mils thick if operating in a temperature range between 140 and 300 deg F. Consult coating manufacturer for appropriate coating materials and application methods for operating temperature range.
2. Carbon Steel: Coat carbon steel operating at a service temperature between 32 and 300 deg F with an epoxy coating. Consult coating manufacturer for appropriate coating materials and application methods for operating temperature range.

C. Coordinate insulation installation with the trade installing heat tracing. Comply with requirements for heat tracing that apply to insulation.

D. Mix insulating cements with clean potable water; if insulating cements are to be in contact with stainless-steel surfaces, use demineralized water.

3.3 GENERAL INSTALLATION REQUIREMENTS

A. Install insulation materials, accessories, and finishes with smooth, straight, and even surfaces; free of voids throughout the length of piping including fittings, valves, and specialties.

B. Install insulation materials, forms, vapor barriers or retarders, jackets, and thicknesses required for each item of pipe system as specified in insulation system schedules.

C. Install accessories compatible with insulation materials and suitable for the service. Install accessories that do not corrode, soften, or otherwise attack insulation or jacket in either wet or dry state.

D. Install insulation with longitudinal seams at top and bottom of horizontal runs.

E. Install multiple layers of insulation with longitudinal and end seams staggered.

F. Do not weld brackets, clips, or other attachment devices to piping, fittings, and specialties.

G. Keep insulation materials dry during application and finishing.

H. Install insulation with tight longitudinal seams and end joints. Bond seams and joints with adhesive recommended by insulation material manufacturer.

I. Install insulation with least number of joints practical.

J. Where vapor barrier is indicated, seal joints, seams, and penetrations in insulation at hangers, supports, anchors, and other projections with vapor-barrier mastic.

1. Install insulation continuously through hangers and around anchor attachments.
2. For insulation application where vapor barriers are indicated, extend insulation on anchor legs from point of attachment to supported item to point of attachment to structure. Taper and seal ends at attachment to structure with vapor-barrier mastic.
3. Install insert materials and install insulation to tightly join the insert. Seal insulation to insulation inserts with adhesive or sealing compound recommended by insulation material manufacturer.
4. Cover inserts with jacket material matching adjacent pipe insulation. Install shields over jacket, arranged to protect jacket from tear or puncture by hanger, support, and shield.

K. Apply adhesives, mastics, and sealants at manufacturer's recommended coverage rate and wet and dry film thicknesses.

L. Install insulation with factory-applied jackets as follows:

1. Draw jacket tight and smooth.
2. Cover circumferential joints with 3-inch wide strips, of same material as insulation jacket. Secure strips with adhesive and outward clinching staples along both edges of strip, spaced 4 inches o.c.
3. Overlap jacket longitudinal seams at least 1-1/2 inches. Install insulation with longitudinal seams at bottom of pipe. Clean and dry surface to receive self-sealing lap. Staple laps with outward clinching staples along edge at 4 inches o.c.

a. For below-ambient services, apply vapor-barrier mastic over staples.

4. Cover joints and seams with tape, according to insulation material manufacturer's written instructions, to maintain vapor seal.
5. Where vapor barriers are indicated, apply vapor-barrier mastic on seams and joints and at ends adjacent to pipe flanges and fittings.

M. Cut insulation in a manner to avoid compressing insulation more than 75 percent of its nominal thickness.

N. Finish installation with systems at operating conditions. Repair joint separations and cracking due to thermal movement.

O. Repair damaged insulation facings by applying same facing material over damaged areas. Extend patches at least 4 inches beyond damaged areas. Adhere, staple, and seal patches similar to butt joints.

P. For above-ambient services, do not install insulation to the following:

1. Vibration-control devices.
2. Testing agency labels and stamps.
3. Nameplates and data plates.
4. Cleanouts.

3.4 PENETRATIONS

A. Insulation Installation at Roof Penetrations: Install insulation continuously through roof penetrations.

1. Seal penetrations with flashing sealant.
2. For applications requiring only indoor insulation, terminate insulation above roof surface and seal with joint sealant. For applications requiring indoor and outdoor insulation, install insulation for outdoor applications tightly joined to indoor insulation ends. Seal joint with joint sealant.
3. Extend jacket of outdoor insulation outside roof flashing at least 2 inches below top of roof flashing.
4. Seal jacket to roof flashing with flashing sealant.

B. Insulation Installation at Underground Exterior Wall Penetrations: Terminate insulation flush with sleeve seal. Seal terminations with flashing sealant.

C. Insulation Installation at Aboveground Exterior Wall Penetrations: Install insulation continuously through wall penetrations.

1. Seal penetrations with flashing sealant.
2. For applications requiring only indoor insulation, terminate insulation inside wall surface and seal with joint sealant. For applications requiring indoor and outdoor insulation, install insulation for outdoor applications tightly joined to indoor insulation ends. Seal joint with joint sealant.
3. Extend jacket of outdoor insulation outside wall flashing and overlap wall flashing at least 2 inches.
4. Seal jacket to wall flashing with flashing sealant.

D. Insulation Installation at Interior Wall and Partition Penetrations (That Are Not Fire Rated): Install insulation continuously through walls and partitions.

E. Insulation Installation at Fire-Rated Wall and Partition Penetrations: Install insulation continuously through penetrations of fire-rated walls and partitions.

1. Comply with requirements in Section 07 8413 "Penetration Firestopping" for firestopping and fire-resistive joint sealers.

F. Insulation Installation at Floor Penetrations:

1. Pipe: Install insulation continuously through floor penetrations.
2. Seal penetrations through fire-rated assemblies. Comply with requirements in Section 07 8413 "Penetration Firestopping."

3.5 GENERAL PIPE INSULATION INSTALLATION

A. Requirements in this article generally apply to all insulation materials except where more specific requirements are specified in various pipe insulation material installation articles.

B. Insulation Installation on Fittings, Valves, Strainers, Flanges, and Unions:

1. Install insulation over fittings, valves, strainers, flanges, unions, and other specialties with continuous thermal and vapor-retarder integrity unless otherwise indicated.
2. Insulate pipe elbows using preformed fitting insulation or mitered fittings made from same material and density as adjacent pipe insulation. Each piece shall be butted tightly against adjoining piece and bonded with adhesive. Fill joints, seams, voids, and irregular surfaces with insulating cement finished to a smooth, hard, and uniform contour that is uniform with adjoining pipe insulation.
3. Insulate tee fittings with preformed fitting insulation or sectional pipe insulation of same material and thickness as used for adjacent pipe. Cut sectional pipe insulation to fit. Butt each section closely to the next and hold in place with tie wire. Bond pieces with adhesive.
4. Insulate valves using preformed fitting insulation or sectional pipe insulation of same material, density, and thickness as used for adjacent pipe. Overlap adjoining pipe insulation by not less than two times the thickness of pipe insulation, or one pipe diameter, whichever is thicker. For valves, insulate up to and including the bonnets, valve stuffing-box studs, bolts, and nuts. Fill joints, seams, and irregular surfaces with insulating cement.
5. Insulate strainers using preformed fitting insulation or sectional pipe insulation of same material, density, and thickness as used for adjacent pipe. Overlap adjoining pipe insulation by not less than two times the thickness of pipe insulation, or one pipe diameter, whichever is thicker. Fill joints, seams, and irregular surfaces with insulating cement. Insulate strainers so strainer basket flange or plug can be easily removed and replaced without damaging the insulation and jacket. Provide a removable reusable insulation cover. For below-ambient services, provide a design that maintains vapor barrier.
6. Insulate flanges and unions using a section of oversized preformed pipe insulation. Overlap adjoining pipe insulation by not less than two times the thickness of pipe insulation, or one pipe diameter, whichever is thicker.
7. Cover segmented insulated surfaces with a layer of finishing cement and coat with a mastic. Install vapor-barrier mastic for below-ambient services and a breather mastic for above-ambient services. Reinforce the mastic with fabric-reinforcing mesh. Trowel the mastic to a smooth and well-shaped contour.

8. For services not specified to receive a field-applied jacket except for flexible elastomeric and polyolefin, install fitted PVC cover over elbows, tees, strainers, valves, flanges, and unions. Terminate ends with PVC end caps. Tape PVC covers to adjoining insulation facing using PVC tape.
9. Stencil or label the outside insulation jacket of each union with the word "union." Match size and color of pipe labels.

C. Insulate instrument connections for thermometers, pressure gages, pressure temperature taps, test connections, flow meters, sensors, switches, and transmitters on insulated pipes. Shape insulation at these connections by tapering it to and around the connection with insulating cement and finish with finishing cement, mastic, and flashing sealant.

D. Install removable insulation covers at locations indicated. Installation shall conform to the following:

1. Make removable flange and union insulation from sectional pipe insulation of same thickness as that on adjoining pipe. Install same insulation jacket as adjoining pipe insulation.
2. When flange and union covers are made from sectional pipe insulation, extend insulation from flanges or union long at least two times the insulation thickness over adjacent pipe insulation on each side of flange or union. Secure flange cover in place with stainless-steel or aluminum bands. Select band material compatible with insulation and jacket.
3. Construct removable valve insulation covers in same manner as for flanges, except divide the two-part section on the vertical center line of valve body.
4. When covers are made from block insulation, make two halves, each consisting of mitered blocks wired to stainless-steel fabric. Secure this wire frame, with its attached insulation, to flanges with tie wire. Extend insulation at least 2 inches over adjacent pipe insulation on each side of valve. Fill space between flange or union cover and pipe insulation with insulating cement. Finish cover assembly with insulating cement applied in two coats. After first coat is dry, apply and trowel second coat to a smooth finish.
5. Unless a PVC jacket is indicated in field-applied jacket schedules, finish exposed surfaces with a metal jacket.

3.6 INSTALLATION OF CELLULAR-GLASS INSULATION

A. Insulation Installation on Straight Pipes and Tubes:

1. Secure each layer of insulation to pipe with wire or bands and tighten bands without deforming insulation materials.
2. Where vapor barriers are indicated, seal longitudinal seams, end joints, and protrusions with vapor-barrier mastic and joint sealant.
3. For insulation with factory-applied jackets on above-ambient services, secure laps with outward clinched staples at 6 inches o.c.
4. For insulation with factory-applied jackets on below-ambient services, do not staple longitudinal tabs. Instead, secure tabs with additional adhesive as recommended by insulation material manufacturer and seal with vapor-barrier mastic and flashing sealant.

B. Insulation Installation on Pipe Flanges:

1. Install preformed pipe insulation to outer diameter of pipe flange.
2. Make width of insulation section same as overall width of flange and bolts, plus twice the thickness of pipe insulation.

3. Fill voids between inner circumference of flange insulation and outer circumference of adjacent straight pipe segments with cut sections of cellular-glass block insulation of same thickness as pipe insulation.
4. Install jacket material with manufacturer's recommended adhesive, overlap seams at least 1 inch, and seal joints with flashing sealant.

C. Insulation Installation on Pipe Fittings and Elbows:

1. Install preformed sections of same material as straight segments of pipe insulation when available. Secure according to manufacturer's written instructions.
2. When preformed sections of insulation are not available, install mitered sections of cellular-glass insulation. Secure insulation materials with wire or bands.

D. Insulation Installation on Valves and Pipe Specialties:

1. Install preformed sections of cellular-glass insulation to valve body.
2. Arrange insulation to permit access to packing and to allow valve operation without disturbing insulation.
3. Install insulation to flanges as specified for flange insulation application.

3.7 INSTALLATION OF FLEXIBLE ELASTOMERIC INSULATION

A. Seal longitudinal seams and end joints with manufacturer's recommended adhesive to eliminate openings in insulation that allow passage of air to surface being insulated.

B. Insulation Installation on Pipe Flanges:

1. Install pipe insulation to outer diameter of pipe flange.
2. Make width of insulation section same as overall width of flange and bolts, plus twice the thickness of pipe insulation.
3. Fill voids between inner circumference of flange insulation and outer circumference of adjacent straight pipe segments with cut sections of sheet insulation of same thickness as pipe insulation.
4. Secure insulation to flanges and seal seams with manufacturer's recommended adhesive to eliminate openings in insulation that allow passage of air to surface being insulated.

C. Insulation Installation on Pipe Fittings and Elbows:

1. Install mitered sections of pipe insulation.
2. Secure insulation materials and seal seams with manufacturer's recommended adhesive to eliminate openings in insulation that allow passage of air to surface being insulated.

D. Insulation Installation on Valves and Pipe Specialties:

1. Install preformed valve covers manufactured of same material as pipe insulation when available.
2. When preformed valve covers are not available, install cut sections of pipe and sheet insulation to valve body. Arrange insulation to permit access to packing and to allow valve operation without disturbing insulation.
3. Install insulation to flanges as specified for flange insulation application.
4. Secure insulation to valves and specialties and seal seams with manufacturer's recommended adhesive to eliminate openings in insulation that allow passage of air to surface being insulated.

3.8 INSTALLATION OF MINERAL-FIBER INSULATION

A. Insulation Installation on Straight Pipes and Tubes:

1. Secure each layer of preformed pipe insulation to pipe with wire or bands and tighten bands without deforming insulation materials.
2. Where vapor barriers are indicated, seal longitudinal seams, end joints, and protrusions with vapor-barrier mastic and joint sealant.
3. For insulation with factory-applied jackets on above-ambient surfaces, secure laps with outward clinched staples at 6 inches o.c.
4. For insulation with factory-applied jackets on below-ambient surfaces, do not staple longitudinal tabs. Instead, secure tabs with additional adhesive as recommended by insulation material manufacturer and seal with vapor-barrier mastic and flashing sealant.

B. Insulation Installation on Pipe Flanges:

1. Install preformed pipe insulation to outer diameter of pipe flange.
2. Make width of insulation section same as overall width of flange and bolts, plus twice the thickness of pipe insulation.
3. Fill voids between inner circumference of flange insulation and outer circumference of adjacent straight pipe segments with mineral-fiber blanket insulation.
4. Install jacket material with manufacturer's recommended adhesive, overlap seams at least 1 inch, and seal joints with flashing sealant.

C. Insulation Installation on Pipe Fittings and Elbows:

1. Install preformed sections of same material as straight segments of pipe insulation when available.
2. When preformed insulation elbows and fittings are not available, install mitered sections of pipe insulation, to a thickness equal to adjoining pipe insulation. Secure insulation materials with wire or bands.

D. Insulation Installation on Valves and Pipe Specialties:

1. Install preformed sections of same material as straight segments of pipe insulation when available.
2. When preformed sections are not available, install mitered sections of pipe insulation to valve body.
3. Arrange insulation to permit access to packing and to allow valve operation without disturbing insulation.
4. Install insulation to flanges as specified for flange insulation application.

3.9 INSTALLATION OF PHENOLIC INSULATION

A. General Installation Requirements:

1. Secure single-layer insulation with stainless-steel bands at 12-inch intervals and tighten bands without deforming insulation materials.
2. Install 2-layer insulation with joints tightly butted and staggered at least 3 inches. Secure inner layer with 0.062-inch wire spaced at 12-inch intervals. Secure outer layer with stainless-steel bands at 12-inch intervals.

B. Insulation Installation on Straight Pipes and Tubes:

1. Secure each layer of insulation to pipe with wire or bands and tighten bands without deforming insulation materials.
2. Where vapor barriers are indicated, seal longitudinal seams, end joints, and protrusions with vapor-barrier mastic and joint sealant.
3. For insulation with factory-applied jackets on above-ambient services, secure laps with outward clinched staples at 6 inches o.c.
4. For insulation with factory-applied jackets with vapor retarders on below-ambient services, do not staple longitudinal tabs. Instead, secure tabs with additional adhesive as recommended by insulation material manufacturer and seal with vapor-barrier mastic and flashing sealant.

C. Insulation Installation on Pipe Flanges:

1. Install preformed pipe insulation to outer diameter of pipe flange.
2. Make width of insulation section same as overall width of flange and bolts, plus twice the thickness of pipe insulation.
3. Fill voids between inner circumference of flange insulation and outer circumference of adjacent straight pipe segments with cut sections of block insulation of same material and thickness as pipe insulation.

D. Insulation Installation on Pipe Fittings and Elbows:

1. Install preformed insulation sections of same material as straight segments of pipe insulation. Secure according to manufacturer's written instructions.

E. Insulation Installation on Valves and Pipe Specialties:

1. Install preformed insulation sections of same material as straight segments of pipe insulation. Secure according to manufacturer's written instructions.
2. Arrange insulation to permit access to packing and to allow valve operation without disturbing insulation.
3. Install insulation to flanges as specified for flange insulation application.

3.10 INSTALLATION OF POLYOLEFIN INSULATION

A. Insulation Installation on Straight Pipes and Tubes:

1. Seal split-tube longitudinal seams and end joints with manufacturer's recommended adhesive to eliminate openings in insulation that allow passage of air to surface being insulated.

B. Insulation Installation on Pipe Flanges:

1. Install pipe insulation to outer diameter of pipe flange.
2. Make width of insulation section same as overall width of flange and bolts, plus twice the thickness of pipe insulation.
3. Fill voids between inner circumference of flange insulation and outer circumference of adjacent straight pipe segments with cut sections of polyolefin sheet insulation of same thickness as pipe insulation.
4. Secure insulation to flanges and seal seams with manufacturer's recommended adhesive to eliminate openings in insulation that allow passage of air to surface being insulated.

C. Insulation Installation on Pipe Fittings and Elbows:

1. Install mitered sections of polyolefin pipe insulation.
2. Secure insulation materials and seal seams with manufacturer's recommended adhesive to eliminate openings in insulation that allow passage of air to surface being insulated.

D. Insulation Installation on Valves and Pipe Specialties:

1. Install cut sections of polyolefin pipe and sheet insulation to valve body.
2. Arrange insulation to permit access to packing and to allow valve operation without disturbing insulation.
3. Install insulation to flanges as specified for flange insulation application.
4. Secure insulation to valves and specialties, and seal seams with manufacturer's recommended adhesive to eliminate openings in insulation that allow passage of air to surface being insulated.

3.11 FIELD-APPLIED JACKET INSTALLATION

A. Where glass-cloth jackets are indicated, install directly over bare insulation or insulation with factory-applied jackets.

1. Draw jacket smooth and tight to surface with 2-inch overlap at seams and joints.
2. Embed glass cloth between two 0.062-inch thick coats of lagging adhesive.
3. Completely encapsulate insulation with coating, leaving no exposed insulation.

B. Where FSK jackets are indicated, install as follows:

1. Draw jacket material smooth and tight.
2. Install lap or joint strips with same material as jacket.
3. Secure jacket to insulation with manufacturer's recommended adhesive.
4. Install jacket with 1-1/2-inch laps at longitudinal seams and 3-inch wide joint strips at end joints.
5. Seal openings, punctures, and breaks in vapor-retarder jackets and exposed insulation with vapor-barrier mastic.

C. Where PVC jackets are indicated, install with 1-inch overlap at longitudinal seams and end joints. Seal with manufacturer's recommended adhesive.

1. Apply two continuous beads of adhesive to seams and joints, one bead under lap and the finish bead along seam and joint edge.

D. Where metal jackets are indicated, install with 2-inch overlap at longitudinal seams and end joints. Overlap longitudinal seams arranged to shed water. Seal end joints with weatherproof sealant recommended by insulation manufacturer. Secure jacket with stainless-steel bands 12 inches o.c. and at end joints.

3.12 FINISHES

A. Insulation with ASJ, Glass-Cloth, or Other Paintable Jacket Material: Paint jacket with paint system identified below and as specified in Section 09 9113 "Exterior Painting" and Section 09 9123 "Interior Painting."

1. Flat Acrylic Finish: Two finish coats over a primer that is compatible with jacket material and finish coat paint. Add fungicidal agent to render fabric mildew proof.

a. Finish Coat Material: Interior, flat, latex-emulsion size.

B. Flexible Elastomeric Thermal Insulation: After adhesive has fully cured, apply two coats of insulation manufacturer's recommended protective coating.

C. Color: Final color as selected by Architect. Vary first and second coats to allow visual inspection of the completed Work.

D. Do not field paint aluminum or stainless-steel jackets.

3.13 FIELD QUALITY CONTROL

A. Testing Agency: Engage a qualified testing agency to perform tests and inspections.

B. Perform tests and inspections.

C. Tests and Inspections:

1. Inspect pipe, fittings, strainers, and valves, randomly selected by Architect, by removing field-applied jacket and insulation in layers in reverse order of their installation. Extent of inspection shall be limited to three locations of straight pipe, three locations of threaded fittings, three locations of welded fittings, two locations of threaded strainers, two locations of welded strainers, three locations of threaded valves, and three locations of flanged valves for each pipe service defined in the "Piping Insulation Schedule, General" Article.

D. All insulation applications will be considered defective Work if sample inspection reveals noncompliance with requirements.

END OF SECTION

SECTION 22 1116

DOMESTIC WATER PIPING

PART 1 - GENERAL

1.1 RELATED DOCUMENTS

A. Drawings and general provisions of the Contract, including General and Supplementary Conditions and Division 01 Specification Sections, apply to this Section.

1.2 SUMMARY

A. Section Includes:

1. Copper tube and fittings.
2. Ductile-iron pipe and fittings.
3. Galvanized steel pipe and fittings.
4. Stainless-steel piping
5. CPVC piping.
6. PVC pipe and fittings.
7. PP pipe and fittings.
8. Piping joining materials.
9. Encasement for piping.
10. Transition fittings.
11. Dielectric fittings.

B. Related Requirements:

1. Section 22 1113 "Facility Water Distribution Piping" for water-service piping and water meters outside the building from source to the point where water-service piping enters the building.

1.3 ACTION SUBMITTALS

A. Product Data: For transition fittings and dielectric fittings.

1.4 INFORMATIONAL SUBMITTALS

A. System purging and disinfecting activities report.

B. Field quality-control reports.

1.5 FIELD CONDITIONS

A. Interruption of Existing Water Service: Do not interrupt water service to facilities occupied by Owner or others unless permitted under the following conditions and then only after arranging to provide temporary water service according to requirements indicated:

1. Notify Owner's representative no fewer than five days in advance of proposed interruption of water service.
2. Do not interrupt water service without Owner's written permission.

PART 2 - PRODUCTS

2.1 PIPING MATERIALS

A. The product descriptions listed in the section may not all be used on this project. Refer to the Piping Material Schedules on the drawings for the specific application for each product or material. Products not shown on the schedule for the specific application may not be substituted without pre-approval from the Engineer. Where there is a conflict between the drawing schedule and specifications, the drawing schedule shall take precedent.

B. Potable-water piping and components shall comply with NSF 14 and NSF 61 Annex G. Plastic piping components shall be marked with "NSF-pw."

C. Comply with NSF Standard 372 for low lead.

2.2 COPPER TUBE AND FITTINGS

A. Hard Copper Tube: ASTM B 88, Type L and ASTM B 88, Type M water tube, drawn temper.

B. Soft Copper Tube: ASTM B 88, Type K and ASTM B 88, Type L water tube, annealed temper.

C. Cast-Copper, Solder-Joint Fittings: ASME B16.18, pressure fittings.

D. Wrought-Copper, Solder-Joint Fittings: ASME B16.22, wrought-copper pressure fittings.

E. Bronze Flanges: ASME B16.24, Class 150, with solder-joint ends.

F. Copper Unions:

1. MSS SP-123.
2. Cast-copper-alloy, hexagonal-stock body.
3. Ball-and-socket, metal-to-metal seating surfaces.
4. Solder-joint or threaded ends.

G. Copper Pressure-Seal-Joint Fittings:
1. Fittings for NPS 2 and Smaller: Wrought-copper fitting with EPDM-rubber, O-ring seal in each end.
2. Fittings for NPS 2-1/2 to NPS 4 Cast-bronze or wrought-copper fitting with EPDM-rubber, O-ring seal in each end.

H. Copper Push-on-Joint Fittings:
1. Description:

a. Cast-copper fitting complying with ASME B16.18 or wrought-copper fitting complying with ASME B 16.22.
b. Stainless-steel teeth and EPDM-rubber, O-ring seal in each end instead of solder-joint ends.

I. Copper-Tube, Extruded-Tee Connections:
   1. Description: Tee formed in copper tube according to ASTM F 2014.

J. Appurtenances for Grooved-End Copper Tubing:
   1. Bronze Fittings for Grooved-End, Copper Tubing: ASTM B 75/B 75M copper tube or ASTM B 584 bronze castings.
   2. Mechanical Couplings for Grooved-End Copper Tubing:

      a. Copper-tube dimensions and design similar to AWWA C606.
      b. Ferrous housing sections.
      c. EPDM-rubber gaskets suitable for hot and cold water.
      d. Bolts and nuts.
      e. Minimum Pressure Rating: 300 psig.

2.3 DUCTILE-IRON PIPE AND FITTINGS

A. Mechanical-Joint, Ductile-Iron Pipe:

   1. AWWA C151/A21.51, with mechanical-joint bell and plain spigot end unless grooved or flanged ends are indicated.
   2. Glands, Gaskets, and Bolts: AWWA C111/A21.11, ductile- or gray-iron glands, rubber gaskets, and steel bolts.

B. Standard-Pattern, Mechanical-Joint Fittings:

   1. AWWA C110/A21.10, ductile or gray iron.
   2. Glands, Gaskets, and Bolts: AWWA C111/A21.11, ductile- or gray-iron glands, rubber gaskets, and steel bolts.

C. Compact-Pattern, Mechanical-Joint Fittings:

   1. AWWA C153/A21.53, ductile iron.
   2. Glands, Gaskets, and Bolts: AWWA C111/A21.11, ductile- or gray-iron glands, rubber gaskets, and steel bolts.

D. Push-on-Joint, Ductile-Iron Pipe:

   1. AWWA C151/A21.51.
   2. Push-on-joint bell and plain spigot end unless grooved or flanged ends are indicated.

E. Standard-Pattern, Push-on-Joint Fittings:

   1. AWWA C110/A21.10, ductile or gray iron.
   2. Gaskets: AWWA C111/A21.11, rubber.

F. Compact-Pattern, Push-on-Joint Fittings:

   1. AWWA C153/A21.53, ductile iron.
   2. Gaskets: AWWA C111/A21.11, rubber.

G. Plain-End, Ductile-Iron Pipe: AWWA C151/A21.51.

H. Appurtenances for Grooved-End, Ductile-Iron Pipe:

1. Fittings for Grooved-End, Ductile-Iron Pipe: ASTM A 47/A 47M, malleable-iron castings or ASTM A 536, ductile-iron castings with dimensions that match pipe.
2. Mechanical Couplings for Grooved-End, Ductile-Iron-Piping:

    a. AWWA C606 for ductile-iron-pipe dimensions.
    b. Ferrous housing sections.
    c. EPDM-rubber gaskets suitable for hot and cold water.
    d. Bolts and nuts.
    e. Minimum Pressure Rating:

        1) NPS 14 to NPS 18: 250 psig.
        2) NPS 20 to NPS 46: 150 psig.

2.4 GALVANIZED-STEEL PIPE AND FITTINGS

A. Galvanized-Steel Pipe:

1. ASTM A 53/A 53M, Type E, Standard Weight.
2. Include ends matching joining method.

B. Galvanized-Steel Pipe Nipples: ASTM A 733, made of ASTM A 53/A 53M or ASTM A 106/A 106M, Standard Weight, seamless steel pipe with threaded ends.

C. Galvanized, Gray-Iron Threaded Fittings: ASME B16.4, Class 125, standard pattern.

D. Malleable-Iron Unions:

1. ASME B16.39, Class 150.
2. Hexagonal-stock body.
3. Ball-and-socket, metal-to-metal, bronze seating surface.
4. Threaded ends.

E. Flanges: ASME B16.1, Class 125, cast iron.

F. Appurtenances for Grooved-End, Galvanized-Steel Pipe:
1. Fittings for Grooved-End, Galvanized-Steel Pipe: Galvanized, ASTM A 47/A 47M, malleable-iron casting; ASTM A 106/A 106M, steel pipe; or ASTM A 536, ductile-iron casting; with dimensions matching steel pipe.
2. Fittings for Grooved-End, Galvanized-Steel Pipe:

    a. AWWA C606 for steel-pipe dimensions.
    b. Ferrous housing sections.
    c. EPDM-rubber gaskets suitable for hot and cold water.
    d. Bolts and nuts.
    e. Minimum Pressure Rating:

        1) NPS 8 and Smaller: 600 psig.
        2) NPS 10 and NPS 12: 400 psig.
        3) NPS 14 to NPS 24: 250 psig..

2.5 STAINLESS-STEEL PIPING

A. Potable-water piping and components shall comply with NSF 61 Annex G.

B. Stainless-Steel Pipe: ASTM A 312/A 312M, Schedule 40.

C. Stainless-Steel Pipe Fittings: ASTM A 815/A 815M.

D. Appurtenances for Grooved-End, Stainless-Steel Pipe:
   1. Fittings for Grooved-End, Stainless-Steel Pipe: Stainless-steel casting with dimensions matching stainless-steel pipe.
   2. Mechanical Couplings for Grooved-End, Stainless-Steel Pipe:

      a. AWWA C606 for stainless-steel-pipe dimensions.
      b. Stainless-steel housing sections.
      c. Stainless-steel bolts and nuts.
      d. EPDM-rubber gaskets suitable for hot and cold water.
      e. Minimum Pressure Rating:

         1) NPS 8 and Smaller: 600 psig.
         2) NPS 10 and NPS 12 : 400 psig.
         3) NPS 14 to NPS 24: 250 psig.

2.6 CPVC PIPING

A. CPVC Pipe: ASTM F 441/F 441M, Schedule 40 and Schedule 80.

   1. CPVC Socket Fittings: ASTM F 438 for Schedule 40 and ASTM F 439 for Schedule 80.
   2. CPVC Threaded Fittings: ASTM F 437, Schedule 80.

B. CPVC Piping System: ASTM D 2846/D 2846M, SDR 11, pipe and socket fittings.

C. CPVC Tubing System: ASTM D 2846/D 2846M, SDR 11, tube and socket fittings.

2.7 PEX TUBE AND FITTINGS

A. Tube Material: PEX plastic according to ASTM F 876 and ASTM F 877. Fittings and pipe to be by same manufacturer.

B. Fittings: ASTM F 1807, metal insert and copper crimp rings ASTM F 1960, cold expansion fittings and reinforcing rings.

C. Fittings: ASSE 1061, push-fit fittings.

D. Manifold: Multiple-outlet, plastic or corrosion-resistant-metal assembly complying with ASTM F 876; with plastic or corrosion-resistant-metal valve for each outlet.

2.8 PEX-AL-PEX TUBE AND FITTINGS

A. Tube Material: PEX plastic bonded to the inside and outside of a welded aluminum tube according to ASTM F 1281.

B. Oxygen Barrier: Limit oxygen diffusion through the pipe to maximum 0.10 mg per cu. m/day at 104 deg F according to DIN 4726.

C. Fittings: ASTM F 1974, metal insert fittings with split ring and compression nut (compression joint) or metal insert fittings with copper crimp rings (crimp joint). Use manufacturer specific joining tools.

2.9 PEX-AL-HDPE TUBE AND FITTINGS

A. Tube Material: ASTM F 1986 tubing.

B. Fittings for PEX-AL-HDPE Tube: ASTM F 1986, metal-insert type with copper or stainless-steel crimp ring and matching PEX-AL-HDPE tube dimensions

2.10 PVC PIPE AND FITTINGS

A. PVC Pipe: ASTM D 1785, Schedule 40 and Schedule 80.

B. PVC Socket Fittings: ASTM D 2466 for Schedule 40 and ASTM D 2467 for Schedule 80.

C. PVC Schedule 80 Threaded Fittings: ASTM D 2464.

2.11 PP PIPE AND FITTINGS

A. PP Pipe: ASTM F 2389, SDR 7.4 and SDR 11.

B. PVC Socket Fittings: ASTM F 2389.

2.12 PIPING JOINING MATERIALS

A. Pipe-Flange Gasket Materials:

1. AWWA C110/A21.10, rubber, flat face, 1/8 inch thick or ASME B16.21, nonmetallic and asbestos free unless otherwise indicated.
2. Full-face or ring type unless otherwise indicated.

B. Metal, Pipe-Flange Bolts and Nuts: ASME B18.2.1, carbon steel unless otherwise indicated.

C. Solder Filler Metals: ASTM B 32, lead-free alloys.

D. Flux: ASTM B 813, water flushable.

E. Brazing Filler Metals: AWS A5.8M/A5.8, BCuP Series, copper-phosphorus alloys for general-duty brazing unless otherwise indicated.

F. Solvent Cements for Joining CPVC Piping and Tubing: ASTM F 493.

G. Solvent Cements for Joining PVC Piping: ASTM D 2564. Include primer according to ASTM F 656.

H. Plastic, Pipe-Flange Gaskets, Bolts, and Nuts: Type and material recommended by piping system manufacturer unless otherwise indicated.

2.13 ENCASEMENT FOR PIPING

A. Standard: ASTM A 674 or AWWA C105/A21.5.

B. Form: tube.

C. Color: Black or natural.

2.14 TRANSITION FITTINGS

A. General Requirements:

1. Same size as pipes to be joined.
2. Pressure rating at least equal to pipes to be joined.
3. End connections compatible with pipes to be joined.

B. Fitting-Type Transition Couplings: Manufactured piping coupling or specified piping system fitting.

C. Sleeve-Type Transition Coupling: AWWA C219.

D. Plastic-to-Metal Transition Fittings:
1. Description:

a. CPVC or PVC one-piece fitting with manufacturer's Schedule 80 equivalent dimensions.
b. One end with threaded brass insert and one solvent-cement-socket or threaded end.

E. Plastic-to-Metal Transition Unions:
1. Description:

a. CPVC or PVC four-part union.
b. Brass or stainless-steel threaded end.
c. Solvent-cement-joint or threaded plastic end.
d. Rubber O-ring.
e. Union nut.

2.15 DIELECTRIC FITTINGS

A. General Requirements: Assembly of copper alloy and ferrous materials with separating nonconductive insulating material. Include end connections compatible with pipes to be joined.

B. Dielectric Unions:
1. Standard: ASSE 1079.
2. Pressure Rating: 250 psig.
3. End Connections: Solder-joint copper alloy and threaded ferrous.

C. Dielectric Flanges:
1. Standard: ASSE 1079.
2. Factory-fabricated, bolted, companion-flange assembly.
3. Pressure Rating: 125 psig minimum at 180 deg F 300 psig.

4. End Connections: Solder-joint copper alloy and threaded ferrous; threaded solder-joint copper alloy and threaded ferrous.

D. Dielectric-Flange Insulating Kits:
1. Nonconducting materials for field assembly of companion flanges.
2. Pressure Rating: 150 psig.
3. Gasket: Neoprene or phenolic.
4. Bolt Sleeves: Phenolic or polyethylene.
5. Washers: Phenolic with steel backing washers.

E. Dielectric Nipples:
1. Standard: IAPMO PS 66.
2. Electroplated steel nipple complying with ASTM F 1545.
3. Pressure Rating and Temperature: 300 psig at 225 deg F.
4. End Connections: Male threaded or grooved.
5. Lining: Inert and noncorrosive, propylene.

PART 3 - EXECUTION

3.1 EARTHWORK

A. Comply with requirements in Section 31 2000 "Earth Moving" for excavating, trenching, and backfilling.

3.2 PIPING INSTALLATION

A. Drawing plans, schematics, and diagrams indicate general location and arrangement of domestic water piping. Indicated locations and arrangements are used to size pipe and calculate friction loss, expansion, and other design considerations. Install piping as indicated unless deviations to layout are approved on coordination drawings.

B. Install copper tubing under building slab according to CDA's "Copper Tube Handbook."

C. Install ductile-iron piping under building slab with restrained joints according to AWWA C600 and AWWA M41.

D. Install underground copper tube and ductile-iron pipe in PE encasement according to ASTM A 674 or AWWA C105/A21.5.

E. Install shutoff valve, hose-end drain valve, strainer, pressure gage, and test tee with valve inside the building at each domestic water-service entrance. Comply with requirements for pressure gages in Section 22 0519 "Meters and Gages for Plumbing Piping" and with requirements for drain valves and strainers in Section 22 1119 "Domestic Water Piping Specialties."

F. Install shutoff valve immediately upstream of each dielectric fitting.

G. Install water-pressure-reducing valves downstream from shutoff valves. Comply with requirements for pressure-reducing valves in Section 22 1119 "Domestic Water Piping Specialties."

H. Install domestic water piping level with 0.25 percent slope downward toward drain and plumb.

I. Rough-in domestic water piping for water-meter installation according to utility company's requirements.

J. Install seismic restraints on piping. Comply with requirements for seismic-restraint devices in Section 22 0548 "Vibration and Seismic Controls for Plumbing Piping and Equipment."

K. Install piping concealed from view and protected from physical contact by building occupants unless otherwise indicated and except in equipment rooms and service areas.

L. Install piping indicated to be exposed and piping in equipment rooms and service areas at right angles or parallel to building walls. Diagonal runs are prohibited unless specifically indicated otherwise.

M. Install piping above accessible ceilings to allow sufficient space for ceiling panel removal, and coordinate with other services occupying that space.

N. Install piping to permit valve servicing.

O. Install nipples, unions, special fittings, and valves with pressure ratings the same as or higher than the system pressure rating used in applications below unless otherwise indicated.

P. Install piping free of sags and bends.

Q. Install fittings for changes in direction and branch connections.

R. Install PEX tubing with loop at each change of direction of more than 90 degrees.

S. Install unions in copper tubing at final connection to each piece of equipment, machine, and specialty.

T. Install pressure gages on suction and discharge piping for each plumbing pump and packaged booster pump. Comply with requirements for pressure gages in Section 22 0519 "Meters and Gages for Plumbing Piping."

U. Install thermostats in hot-water circulation piping. Comply with requirements for thermostats in Section 22 1123 "Domestic Water Pumps."

V. Install thermometers on inlet and outlet piping from each water heater. Comply with requirements for thermometers in Section 22 0519 "Meters and Gages for Plumbing Piping."

W. Install sleeves for piping penetrations of walls, ceilings, and floors. Comply with requirements for sleeves specified in Section 22 0517 "Sleeves and Sleeve Seals for Plumbing Piping."

X. Install sleeve seals for piping penetrations of concrete walls and slabs. Comply with requirements for sleeve seals specified in Section 22 0517 "Sleeves and Sleeve Seals for Plumbing Piping."

Y. Install escutcheons for piping penetrations of walls, ceilings, and floors. Comply with requirements for escutcheons specified in Section 22 0518 "Escutcheons for Plumbing Piping."

3.3 JOINT CONSTRUCTION

A. Ream ends of pipes and tubes and remove burrs. Bevel plain ends of steel pipe.

B. Remove scale, slag, dirt, and debris from inside and outside of pipes, tubes, and fittings before assembly.

C. Threaded Joints: Thread pipe with tapered pipe threads according to ASME B1.20.1. Cut threads full and clean using sharp dies. Ream threaded pipe ends to remove burrs and restore full ID. Join pipe fittings and valves as follows:

1. Apply appropriate tape or thread compound to external pipe threads.
2. Damaged Threads: Do not use pipe or pipe fittings with threads that are corroded or damaged.

D. Brazed Joints for Copper Tubing: Comply with CDA's "Copper Tube Handbook," "Brazed Joints" chapter.

E. Soldered Joints for Copper Tubing: Apply ASTM B 813, water-flushable flux to end of tube. Join copper tube and fittings according to ASTM B 828 or CDA's "Copper Tube Handbook."

F. Pressure-Sealed Joints for Copper Tubing: Join copper tube and pressure-seal fittings with tools recommended by fitting manufacturer.

G. Push-on Joints for Copper Tubing: Clean end of tube. Measure insertion depth with manufacturer's depth gage. Join copper tube and push-on-joint fittings by inserting tube to measured depth.

H. Extruded-Tee Connections: Form tee in copper tube according to ASTM F 2014. Use tool designed for copper tube; drill pilot hole, form collar for outlet, dimple tube to form seating stop, and braze branch tube into collar.

I. Joint Construction for Grooved-End Copper Tubing: Make joints according to AWWA C606. Roll groove ends of tubes. Lubricate and install gasket over ends of tubes or tube and fitting. Install coupling housing sections over gasket with keys seated in tubing grooves. Install and tighten housing bolts.

J. Joint Construction for Grooved-End, Ductile-Iron Piping: Make joints according to AWWA C606. Cut round-bottom grooves in ends of pipe at gasket-seat dimension required for specified (flexible or rigid) joint. Lubricate and install gasket over ends of pipes or pipe and fitting. Install coupling housing sections over gasket with keys seated in piping grooves. Install and tighten housing bolts.

K. Joint Construction for Grooved-End Steel Piping: Make joints according to AWWA C606. Roll groove ends of pipe as specified. Lubricate and install gasket over ends of pipes or pipe and fitting. Install coupling housing sections over gasket with keys seated in piping grooves. Install and tighten housing bolts.

L. Flanged Joints: Select appropriate asbestos-free, nonmetallic gasket material in size, type, and thickness suitable for domestic water service. Join flanges with gasket and bolts according to ASME B31.9.

M. Joint Construction for Solvent-Cemented Plastic Piping: Clean and dry joining surfaces. Join pipe and fittings according to the following:

1. Comply with ASTM F 402 for safe-handling practice of cleaners, primers, and solvent cements. Apply primer.
2. CPVC Piping: Join according to ASTM D 2846/D 2846M Appendix.
3. PVC Piping: Join according to ASTM D 2855.

N. Joints for PEX Tubing: Join according to ASTM F 1807 for metal insert and copper crimp ring fittings and ASTM F 1960 for cold expansion fittings and reinforcing rings.

O. Joints for PEX Tubing: Join according to ASSE 1061 for push-fit fittings.

P. Joints for Dissimilar-Material Piping: Make joints using adapters compatible with materials of both piping systems.

3.4 TRANSITION FITTING INSTALLATION

A. Install transition couplings at joints of dissimilar piping.

B. Transition Fittings in Underground Domestic Water Piping:

1. Fittings for NPS 1-1/2 and Smaller: Fitting-type coupling.
2. Fittings for NPS 2 and Larger: Sleeve-type coupling.

C. Transition Fittings in Aboveground Domestic Water Piping NPS 2 and Smaller: Plastic-to-metal transition fittings or unions.

3.5 DIELECTRIC FITTING INSTALLATION

A. Install dielectric fittings in piping at connections of dissimilar metal piping and tubing.

B. Dielectric Fittings for NPS 2 and Smaller: Use dielectric couplings or nipples.

C. Dielectric Fittings for NPS 2-1/2 to NPS 4: Use dielectric flange kits or nipples.

D. Dielectric Fittings for NPS 5 and Larger: Use dielectric flange kits.

3.6 HANGER AND SUPPORT INSTALLATION

A. Comply with requirements for seismic-restraint devices in Section 22 0548 "Vibration and Seismic Controls for Plumbing Piping and Equipment."

B. Comply with requirements for pipe hanger, support products, and installation in Section 22 0529 "Hangers and Supports for Plumbing Piping and Equipment."

1. Vertical Piping: MSS Type 8 or 42, clamps.
2. Individual, Straight, Horizontal Piping Runs:

    a. 100 Feet and Less: MSS Type 1, adjustable, steel clevis hangers.
    b. Longer Than 100 Feet: MSS Type 43, adjustable roller hangers.
    c. Longer Than 100 Feet if Indicated: MSS Type 49, spring cushion rolls.

3. Multiple, Straight, Horizontal Piping Runs 100 Feet or Longer: MSS Type 44, pipe rolls. Support pipe rolls on trapeze.
4. Base of Vertical Piping: MSS Type 52, spring hangers.

C. Support vertical piping and tubing at base and at each floor.

D. Rod diameter may be reduced one size for double-rod hangers, to a minimum of 3/8 inch.

E. Install hangers for copper tubing with the following maximum horizontal spacing and minimum rod diameters:

1. NPS 3/4 and Smaller: 60 inches with 3/8-inch rod.
2. NPS 1 and NPS 1-1/4: 72 inches with 3/8-inch rod.
3. NPS 1-1/2 and NPS 2: 96 inches with 3/8-inch rod.
4. NPS 2-1/2: 108 inches with 1/2-inch rod.
5. NPS 3 to NPS 5: 10 feet with 1/2-inch rod.
6. NPS 6: 10 feet with 5/8-inch rod.
7. NPS 8: 10 feet with 3/4-inch rod.

F. Install supports for vertical copper tubing every 10 feet.

G. Install hangers for steel piping with the following maximum horizontal spacing and minimum rod diameters:

1. NPS 1-1/4 and Smaller: 84 inches with 3/8-inch rod.
2. NPS 1-1/2: 108 inches with 3/8-inch rod.
3. NPS 2: 10 feet with 3/8-inch rod.
4. NPS 2-1/2: 11 feet with 1/2-inch rod.
5. NPS 3 and NPS 3-1/2: 12 feet with 1/2-inch rod.
6. NPS 4 and NPS 5: 12 feet with 5/8-inch rod.
7. NPS 6: 12 feet with 3/4-inch rod.
8. NPS 8 to NPS 12: 12 feet with 7/8-inch rod.

H. Install supports for vertical steel piping every 15 feet.

I. Install hangers for stainless-steel piping with the following maximum horizontal spacing and minimum rod diameters:

1. NPS 1-1/4 and Smaller: 84 inches with 3/8-inch rod.
2. NPS 1-1/2: 108 inches with 3/8-inch rod.
3. NPS 2: 10 feet with 3/8-inch rod.
4. NPS 2-1/2: 11 feet with 1/2-inch rod.
5. NPS 3 and NPS 3-1/2: 12 feet with 1/2-inch rod.
6. NPS 4 and NPS 5: 12 feet with 5/8-inch rod.
7. NPS 6 :12 feet with 3/4-inch rod.
8. NPS 8 to NPS 12:12 feet with 7/8-inch rod.

J. Install supports for vertical stainless-steel piping every 15 feet.

K. Install vinyl-coated hangers for CPVC piping with the following maximum horizontal spacing and minimum rod diameters:

1. NPS 1 and Smaller: 36 inches with 3/8-inch rod.
2. NPS 1-1/4 to NPS 2: 48 inches with 3/8-inch rod.
3. NPS 2-1/2 to NPS 3-1/2: 48 inches with 1/2-inch rod.
4. NPS 4 and NPS 5: 48 inches with 5/8-inch rod.
5. NPS 6: 48 inches with 3/4-inch rod.
6. NPS 8: 48 inches with 7/8-inch rod.

L. Install supports for vertical CPVC piping every 60 inches for NPS 1 and smaller, and every 72 inches for NPS 1-1/4 and larger.

M. Install vinyl-coated hangers for PEX tubing with the following maximum horizontal spacing and minimum rod diameters:

1. NPS 1 and Smaller: 32 inches with 3/8-inch rod.

N. Install hangers for vertical PEX tubing every 48 inches.

O. Install vinyl-coated hangers for PVC piping with the following maximum horizontal spacing and minimum rod diameters:

1. NPS 2 and Smaller: 48 inches with 3/8-inch rod.
2. NPS 2-1/2 to NPS 3-1/2: 48 inches with 1/2-inch rod.
3. NPS 4 and NPS 5: 48 inches with 5/8-inch rod.
4. NPS 6: 48 inches with 3/4-inch rod.
5. NPS 8: 48 inches with 7/8-inch rod.

P. Install supports for vertical PVC piping every 48 inches.

Q. Install vinyl-coated hangers for PP piping with the following maximum horizontal spacing and minimum rod diameters:

1. NPS 1 and Smaller: 36 inches with 3/8-inch rod.
2. NPS 1-1/4 to NPS 2: 48 inches with 3/8-inch rod.
3. NPS 2-1/2 to NPS 3-1/2: 48 inches with 1/2-inch rod.
4. NPS 4 and NPS 5: 48 inches with 5/8-inch rod.
5. NPS 6: 48 inches with 3/4-inch rod.
6. NPS 8: 48 inches with 7/8-inch rod.

R. Install supports for vertical PP piping every 60 inches for NPS 1 and smaller, and every 72 inches for NPS 1-1/4 and larger.

S. Support piping and tubing not listed in this article according to MSS SP-58 and manufacturer's written instructions.

3.7 CONNECTIONS

A. Drawings indicate general arrangement of piping, fittings, and specialties.

B. When installing piping adjacent to equipment and machines, allow space for service and maintenance.

C. Connect domestic water piping to exterior water-service piping. Use transition fitting to join dissimilar piping materials.

D. Connect domestic water piping to water-service piping with shutoff valve; extend and connect to the following:

1. Domestic Water Booster Pumps: Cold-water suction and discharge piping.
2. Water Heaters: Cold-water inlet and hot-water outlet piping in sizes indicated, but not smaller than sizes of water heater connections.
3. Plumbing Fixtures: Cold- and hot-water-supply piping in sizes indicated, but not smaller than that required by plumbing code.

4. Equipment: Cold- and hot-water-supply piping as indicated, but not smaller than equipment connections. Provide shutoff valve and union for each connection. Use flanges instead of unions for NPS 2-1/2 and larger.

3.8 IDENTIFICATION

A. Identify system components. Comply with requirements for identification materials and installation in Section 22 0553 "Identification for Plumbing Piping and Equipment."

B. Label pressure piping with system operating pressure.

3.9 FIELD QUALITY CONTROL

A. Perform the following tests and inspections:

1. Piping Inspections:

   a. Do not enclose, cover, or put piping into operation until it has been inspected and approved by authorities having jurisdiction.
   b. During installation, notify authorities having jurisdiction at least one day before inspection must be made. Perform tests specified below in presence of authorities having jurisdiction:

      1) Roughing-in Inspection: Arrange for inspection of piping before concealing or closing in after roughing in and before setting fixtures.
      2) Final Inspection: Arrange for authorities having jurisdiction to observe tests specified in "Piping Tests" Subparagraph below and to ensure compliance with requirements.

   c. Reinspection: If authorities having jurisdiction find that piping will not pass tests or inspections, make required corrections and arrange for reinspection.
   d. Reports: Prepare inspection reports and have them signed by authorities having jurisdiction.

2. Piping Tests:

   a. Fill domestic water piping. Check components to determine that they are not air bound and that piping is full of water.
   b. Test for leaks and defects in new piping and parts of existing piping that have been altered, extended, or repaired. If testing is performed in segments, submit a separate report for each test, complete with diagram of portion of piping tested.
   c. Leave new, altered, extended, or replaced domestic water piping uncovered and unconcealed until it has been tested and approved. Expose work that was covered or concealed before it was tested.
   d. Cap and subject piping to static water pressure of 50 psig above operating pressure, without exceeding pressure rating of piping system materials. Isolate test source and allow it to stand for four hours. Leaks and loss in test pressure constitute defects that must be repaired.
   e. Repair leaks and defects with new materials, and retest piping or portion thereof until satisfactory results are obtained.
   f. Prepare reports for tests and for corrective action required.

B. Domestic water piping will be considered defective if it does not pass tests and inspections.

C. Prepare test and inspection reports.

3.10 ADJUSTING

A. Perform the following adjustments before operation:

1. Close drain valves, hydrants, and hose bibbs.
2. Open shutoff valves to fully open position.
3. Open throttling valves to proper setting.
4. Adjust balancing valves in hot-water-circulation return piping to provide adequate flow.

    a. Manually adjust ball-type balancing valves in hot-water-circulation return piping to provide hot-water flow in each branch.
    b. Adjust calibrated balancing valves to flows indicated.

5. Remove plugs used during testing of piping and for temporary sealing of piping during installation.
6. Remove and clean strainer screens. Close drain valves and replace drain plugs.
7. Remove filter cartridges from housings and verify that cartridges are as specified for application where used and are clean and ready for use.
8. Check plumbing specialties and verify proper settings, adjustments, and operation.

3.11 CLEANING

A. Clean and disinfect potable domestic water piping as follows:

1. Purge new piping and parts of existing piping that have been altered, extended, or repaired before using.
2. Use purging and disinfecting procedures prescribed by authorities having jurisdiction; if methods are not prescribed, use procedures described in either AWWA C651 or AWWA C652 or follow procedures described below:

    a. Flush piping system with clean, potable water until dirty water does not appear at outlets.
    b. Fill and isolate system according to either of the following:

        1) Fill system or part thereof with water/chlorine solution with at least 50 ppm of chlorine. Isolate with valves and allow to stand for 24 hours.
        2) Fill system or part thereof with water/chlorine solution with at least 200 ppm of chlorine. Isolate and allow to stand for three hours.

    c. Flush system with clean, potable water until no chlorine is in water coming from system after the standing time.
    d. Repeat procedures if biological examination shows contamination.
    e. Submit water samples in sterile bottles to authorities having jurisdiction.

B. Clean non-potable domestic water piping as follows:

1. Purge new piping and parts of existing piping that have been altered, extended, or repaired before using.
2. Use purging procedures prescribed by authorities having jurisdiction or; if methods are not prescribed, follow procedures described below:

a. Flush piping system with clean, potable water until dirty water does not appear at outlets.
b. Submit water samples in sterile bottles to authorities having jurisdiction. Repeat procedures if biological examination shows contamination.

C. Prepare and submit reports of purging and disinfecting activities. Include copies of water-sample approvals from authorities having jurisdiction.

D. Clean interior of domestic water piping system. Remove dirt and debris as work progresses.

3.12 PIPING SCHEDULE

A. Transition and special fittings with pressure ratings at least equal to piping rating may be used in applications below unless otherwise indicated.

B. Flanges and unions may be used for aboveground piping joints unless otherwise indicated.

C. Fitting Option: Extruded-tee connections and brazed joints may be used on aboveground copper tubing.

3.13 VALVE SCHEDULE

A. Where specific valve types are not indicated, the following requirements apply:

1. Shutoff Duty: Use ball or gate valves for piping NPS 2 and smaller. Use butterfly, ball, or gate valves with flanged ends for piping NPS 2-1/2 and larger.
2. Throttling Duty: Use ball or globe valves for piping NPS 2 and smaller. Use butterfly or ball valves with flanged ends for piping NPS 2-1/2 and larger.
3. Hot-Water Circulation Piping, Balancing Duty: Calibrated balancing valves.
4. Drain Duty: Hose-end drain valves.

B. Use check valves to maintain correct direction of domestic water flow to and from equipment.

C. Iron grooved-end valves may be used with grooved-end piping.

END OF SECTION

SECTION 22 1119

DOMESTIC WATER PIPING SPECIALTIES

PART 1 - GENERAL

1.1 RELATED DOCUMENTS

A. Drawings and general provisions of the Contract, including General and Supplementary Conditions and Division 01 Specification Sections, apply to this Section.

1.2 SUMMARY

A. Section Includes:

1. Vacuum breakers.
2. Backflow preventers.
3. Water pressure-reducing valves.
4. Balancing valves.
5. Temperature-actuated, water mixing valves.
6. Strainers.
7. Outlet boxes.
8. Hose stations.
9. Hose bibbs.
10. Wall hydrants.
11. Ground hydrants.
12. Post hydrants.
13. Drain valves.
14. Water-hammer arresters.
15. Air vents.
16. Trap-seal primer valves.
17. Trap-seal primer systems.
18. Specialty valves.
19. Flexible connectors.
20. Water meters.

B. Related Requirements:

1. Section 22 0519 "Meters and Gages for Plumbing Piping" for thermometers, pressure gages, and flow meters in domestic water piping.
2. Section 22 1116 "Domestic Water Piping" for water meters.
3. Section 22 3200 "Domestic Water Filtration Equipment" for water filters in domestic water piping.
4. Section 22 4300 "Medical Plumbing Fixtures" for thermostatic mixing valves for sitz baths, thermostatic mixing-valve assemblies for hydrotherapy equipment, and outlet boxes for dialysis equipment.
5. Section 22 4500 "Emergency Plumbing Fixtures" for water tempering equipment.

1.3 ACTION SUBMITTALS

A. Product Data: For each type of product.

B. Shop Drawings: For domestic water piping specialties.

1. Include diagrams for power, signal, and control wiring.

1.4 INFORMATIONAL SUBMITTALS

A. Field quality-control reports.

1.5 CLOSEOUT SUBMITTALS

A. Operation and Maintenance Data: For domestic water piping specialties to include in emergency, operation, and maintenance manuals.

PART 2 - PRODUCTS

2.1 GENERAL REQUIREMENTS FOR PIPING SPECIALTIES

A. Potable-water piping and components shall comply with NSF 61 Annex G and NSF 14.

B. The product descriptions listed in the section may not all be used on this project. Refer to the Product Schedules and details on the drawings for the specific application for each product or material. Products shown on the schedule for a specific application may not be substituted without pre-approval from the Engineer. Where there is a conflict between the drawing schedule and specifications, the drawing schedule shall take precedent.

2.2 PERFORMANCE REQUIREMENTS

A. Minimum Working Pressure for Domestic Water Piping Specialties: 125 psig unless otherwise indicated.

2.3 VACUUM BREAKERS

A. Pipe-Applied, Atmospheric-Type Vacuum Breakers:
1. Standard: ASSE 1001.
2. Size: NPS 1/4 to NPS 3, as required to match connected piping.
3. Body: Bronze.
4. Inlet and Outlet Connections: Threaded.
5. Finish: Chrome plated.

B. Pressure Vacuum Breakers:
1. Standard: ASSE 1020.
2. Operation: Continuous-pressure applications.
3. Pressure Loss: 5 psig maximum, through middle third of flow range.
4. Pressure Loss at Design Flow Rate: 5 psi max.
5. Accessories:

a. Valves: Ball type, on inlet and outlet.

2.4 WATER PRESSURE-REDUCING VALVES

A. Water Regulators:
1. Standard: ASSE 1003.
2. Pressure Rating: Initial working pressure of 150 psig.
3. Design Flow Rate: See Drawings.
4. Design Inlet Pressure: See Drawings.
5. Design Outlet Pressure Setting: See Drawings:
6. Body: Bronze with chrome-plated finish for NPS 2 and smaller; cast iron with interior lining that complies with AWWA C550 or that is FDA approved for NPS 2-1/2 and NPS 3.
7. Valves for Booster Heater Water Supply: Include integral bypass.
8. End Connections: Threaded for NPS 2 and smaller; flanged for NPS 2-1/2 and NPS 3.

B. Water-Control Valves:
1. Description: Pilot-operated, diaphragm-type, single-seated, main water-control valve.
2. Pressure Rating: Initial working pressure of 150 psig minimum with AWWA C550 or FDA-approved, interior epoxy coating. Include small pilot-control valve, restrictor device, specialty fittings, and sensor piping.
3. Main Valve Body: Cast- or ductile-iron body with AWWA C550 or FDA-approved, interior epoxy coating; or stainless-steel body.
   a. Pattern: Angle or Globe-valve design.
   b. Trim: Stainless steel.

4. Design Flow: See Drawings.
5. Design Inlet Pressure: See Drawings.
6. Design Outlet Pressure Setting: See Drawings.
7. End Connections: Threaded for NPS 2 and smaller; flanged for NPS 2-1/2 and larger.

2.5 BALANCING VALVES

A. Copper-Alloy Calibrated Balancing Valves:
1. Type: Ball or Y-pattern globe valve with two readout ports and memory-setting indicator.
2. Body: Brass or bronze.
3. Size: Same as connected piping, but not larger than NPS 2.
4. Accessories: Meter hoses, fittings, valves, differential pressure meter, and carrying case.

B. Cast-Iron Calibrated Balancing Valves:
1. Type: Adjustable with Y-pattern globe valve, two readout ports, and memory-setting indicator.
2. Size: Same as connected piping, but not smaller than NPS 2-1/2.

C. Accessories: Meter hoses, fittings, valves, differential pressure meter, and carrying case.

D. Memory-Stop Balancing Valves:
1. Standard: MSS SP-110 for two-piece, copper-alloy ball valves.
2. Pressure Rating: 400-psig minimum CWP.
3. Size: NPS 2 or smaller.
4. Body: Copper alloy.
5. Port: Standard or full port.
6. Ball: Chrome-plated brass.
7. Seats and Seals: Replaceable.

8. End Connections: Solder joint or threaded.
9. Handle: Vinyl-covered steel with memory-setting device.

2.6 STRAINERS FOR DOMESTIC WATER PIPING

A. Y-Pattern Strainers:

1. Pressure Rating: 125 psig minimum unless otherwise indicated.
2. Body: Bronze for NPS 2 and smaller; cast iron with interior lining that complies with AWWA C550 or that is FDA approved, epoxy coated and for NPS 2-1/2 and larger.
3. End Connections: Threaded for NPS 2 and smaller; flanged for NPS 2-1/2 and larger.
4. Screen: Stainless steel with round perforations unless otherwise indicated.
5. Perforation Size:

    a. Strainers NPS 2 and Smaller: 0.033 inch.
    b. Strainers NPS 2-1/2 to NPS 4 0.045 inch.
    c. Strainers NPS 5 and Larger: 0.10 inch.

6. Drain: Factory-installed, hose-end drain valve.

2.7 DRAIN VALVES

A. Ball-Valve-Type, Hose-End Drain Valves:

1. Standard: MSS SP-110 for standard-port, two-piece ball valves.
2. Pressure Rating: 400-psig minimum CWP.
3. Size: NPS ¾.
4. Body: Copper alloy.
5. Ball: Chrome-plated brass.
6. Seats and Seals: Replaceable.
7. Handle: Vinyl-covered steel.
8. Inlet: Threaded or solder joint.
9. Outlet: Threaded, short nipple with garden-hose thread complying with ASME B1.20.7 and cap with brass chain.

B. Gate-Valve-Type, Hose-End Drain Valves:

1. Standard: MSS SP-80 for gate valves.
2. Pressure Rating: Class 125.
3. Size: NPS 3/4.
4. Body: ASTM B 62 bronze.
5. Inlet: NPS ¾ threaded or solder joint.
6. Outlet: Garden-hose thread complying with ASME B1.20.7 and cap with brass chain.

C. Stop-and-Waste Drain Valves:

1. Standard: MSS SP-110 for ball valves or MSS SP-80 for gate valves.
2. Pressure Rating: 200-psig minimum CWP or Class 125.
3. Size: NPS 3/4.
4. Body: Copper alloy or ASTM B 62 bronze.
5. Drain: NPS 1/8 side outlet with cap.

2.8 AIR VENTS

A. Bolted-Construction Automatic Air Vents:

1. Body: Bronze.
2. Pressure Rating and Temperature: 125-psig minimum pressure rating at 140 deg F.
3. Float: Replaceable, corrosion-resistant metal.
4. Mechanism and Seat: Stainless steel.
5. Size: NPS 1/2 minimum inlet.
6. Inlet and Vent Outlet End Connections: Threaded.

B. Welded-Construction Automatic Air Vents:

1. Body: Stainless steel.
2. Pressure Rating: 150-psig minimum pressure rating.
3. Float: Replaceable, corrosion-resistant metal.
4. Mechanism and Seat: Stainless steel.
5. Size: NPS 3/8 minimum inlet.
6. Inlet and Vent Outlet End Connections: Threaded.

2.9 SPECIALTY VALVES

A. Comply with requirements for general-duty metal valves in Section 22 0523.12 "Ball Valves for Plumbing Piping," Section 22 0523.13 "Butterfly Valves for Plumbing Piping," Section 22 0523.14 "Check Valves for Plumbing Piping," and Section 22 0523.15 "Gate Valves for Plumbing Piping."

B. CPVC Union Ball Valves:
1. Description:

a. Standard: MSS SP-122.
b. Pressure Rating and Temperature: 150 psig 73 deg F.
c. Body Material: CPVC.
d. Body Design: Union type.
e. End Connections for Valves NPS 2 and Smaller: Detachable, socket or threaded.
f. End Connections for Valves NPS 2-1/2 to NPS 4: Detachable, socket or threaded.
g. Ball: CPVC; full port.
h. Seals: PTFE or EPDM-rubber O-rings.
i. Handle: Tee shaped.

C. PVC Union Ball Valves:
1. Description:

a. Standard: MSS SP-122.
b. Pressure Rating and Temperature:150 psig 73 deg F.
c. Body Material: PVC.
d. Body Design: Union type.
e. End Connections for Valves NPS 2 and Smaller: Detachable, socket or threaded.
f. End Connections for Valves NPS 2-1/2 to NPS 4: Detachable, socket or threaded.
g. Ball: PVC; full port.
h. Seals: PTFE or EPDM-rubber O-rings.
i. Handle: Tee shaped.

D. CPVC Non-union Ball Valves:

1. Description:

    a. Standard: MSS SP-122.
    b. Pressure Rating and Temperature:150 psig 73 deg F.
    c. Body Material: CPVC.
    d. Body Design: Non-union type.
    e. End Connections: Socket or threaded.
    f. Ball: CPVC; full or reduced port.
    g. Seals: PTFE or EPDM-rubber O-rings.
    h. Handle: Tee shaped.

E. PVC Non-union Ball Valves:
    1. Description:

        a. Standard: MSS SP-122.
        b. Pressure Rating and Temperature: 150 psig at 73 deg F.
        c. Body Material: PVC.
        d. Body Design: Non-union type.
        e. End Connections: Socket or threaded.
        f. Ball: PVC; full or reduced port.
        g. Seals: PTFE or EPDM-rubber O-rings.
        h. Handle: Tee shaped.

F. CPVC Butterfly Valves:
    1. Description:

        a. Pressure Rating and Temperature: 150 psig at 73 deg F.
        b. Body Material: CPVC.
        c. Body Design: Lug or wafer type.
        d. Seat: EPDM rubber.
        e. Seals: PTFE or EPDM-rubber O-rings.
        f. Disc: CPVC.
        g. Stem: Stainless steel.
        h. Handle: Lever.

G. PVC Butterfly Valves:
    1. Description:

        a. Pressure Rating and Temperature: 150 psig at 73 deg F Insert temperature.
        b. Body Material: PVC.
        c. Body Design: Lug or wafer type.
        d. Seat: EPDM rubber.
        e. Seals: PTFE or EPDM-rubber O-rings.
        f. Disc: PVC.
        g. Stem: Stainless steel.
        h. Handle: Lever.

H. CPVC Ball Check Valves:
    1. Description:

        a. Pressure Rating and Temperature: 150 psig at 73 deg F.
        b. Body Material: CPVC.
        c. Body Design: Union-type ball check.
        d. End Connections for Valves NPS 2 and Smaller: Detachable, socket or threaded.
        e. End Connections for Valves NPS 2-1/2 to NPS 4 Detachable, socket or threaded.

f. Ball: CPVC.
g. Seals: EPDM- or FKM-rubber O-rings.

I. PVC Ball Check Valves:
1. Description:

a. Pressure Rating and Temperature: 150 psig at 73 deg F.
b. Body Material: PVC.
c. Body Design: Union-type ball check.
d. End Connections for Valves NPS 2 and Smaller: Detachable, socket or threaded.
e. End Connections for Valves NPS 2-1/2 to NPS 4: Detachable, socket or threaded.
f. Ball: PVC.
g. Seals: EPDM- or FKM-rubber O-rings.

J. CPVC Gate Valves:
1. Description:

a. Pressure Rating and Temperature: 150 psig at 73 deg F.
b. Body Material: CPVC.
c. Body Design: Nonrising stem.
d. End Connections for Valves NPS 2 and Smaller: socket or threaded.
e. End Connections for Valves NPS 2-1/2 to NPS 4: Socket or threaded.
f. Gate and Stem: Plastic.
g. Seals: EPDM rubber.
h. Handle: Wheel.

K. PVC Gate Valves:
1. Description:

a. Pressure Rating and Temperature: 150 psig at 73 deg F.
b. Body Material: PVC.
c. Body Design: Nonrising stem.
d. End Connections for Valves NPS 2 and Smaller: Socket or threaded.
e. End Connections for Valves NPS 2-1/2 to NPS 4: Socket or threaded.
f. Gate and Stem: Plastic.
g. Seals: EPDM rubber.
h. Handle: Wheel.

2.10 FLEXIBLE CONNECTORS

A. Bronze-Hose Flexible Connectors: Corrugated-bronze tubing with bronze wire-braid covering and ends brazed to inner tubing.

1. Working-Pressure Rating: Minimum 250 psig.
2. End Connections NPS 2 and Smaller: Threaded copper pipe or plain-end copper tube.
3. End Connections NPS 2-1/2 and Larger: Flanged copper alloy.

B. Stainless-Steel-Hose Flexible Connectors: Corrugated-stainless-steel tubing with stainless-steel wire-braid covering and ends welded to inner tubing.

1. Working-Pressure Rating: Minimum 250 psig.
2. End Connections NPS 2 and Smaller: Threaded steel-pipe nipple.
3. End Connections NPS 2-1/2 and Larger: Flanged steel nipple.

2.11 WATER METERS

A. Displacement-Type Water Meters:
   1. Description:

      a. Standard: AWWA C700.
      b. Pressure Rating: 150-psig working pressure.
      c. Body Design: Nutating disc; totalization meter.
      d. Registration: In gallons or cubic feet as required by utility company.
      e. Case: Bronze.
      f. End Connections: Threaded.

B. Turbine-Type Water Meters:
   1. Description:

      a. Standard: AWWA C701.
      b. Pressure Rating: 150-psig working pressure.
      c. Body Design: Turbine; totalization meter.
      d. Registration: In gallons or cubic feet as required by utility company.
      e. Case: Bronze.
      f. End Connections for Meters NPS 2 and Smaller: Threaded.
      g. End Connections for Meters NPS 2-1/2 and Larger: Flanged.

C. Compound-Type Water Meters:
   1. Description:

      a. Standard: AWWA C702.
      b. Pressure Rating: 150-psig working pressure.
      c. Body Design: With integral mainline and bypass meters; totalization meter.
      d. Registration: In gallons or cubic feet as required by utility company.
      e. Case: Bronze.
      f. Pipe Connections: Flanged.

D. Remote Registration System: Direct-reading type complying with AWWA C706; modified with signal-transmitting assembly, low-voltage connecting wiring, and remote register assembly as required by utility company.

E. Remote Registration System: Encoder type complying with AWWA C707; modified with signal-transmitting assembly, low-voltage connecting wiring, and remote register assembly as required by utility company.

PART 3 - EXECUTION

3.1 INSTALLATION

A. Install backflow preventers in each water supply to mechanical equipment and systems and to other equipment and water systems that may be sources of contamination. Comply with authorities having jurisdiction.

   1. Locate backflow preventers in same room as connected equipment or system.
   2. Install drain for backflow preventers with atmospheric-vent drain connection with air-gap fitting, fixed air-gap fitting, or equivalent positive pipe separation of at least two pipe

diameters in drain piping and pipe-to-floor drain. Locate air-gap device attached to or under backflow preventer. Simple air breaks are unacceptable for this application.

3. Do not install bypass piping around backflow preventers.

B. Install water regulators with inlet and outlet shutoff valvesand bypass with memory-stop balancing valve. Install pressure gages on inlet and outlet.

C. Install water-control valves with inlet and outlet shutoff valves and bypass with globe valve. Install pressure gages on inlet and outlet.

D. Install balancing valves in locations where they can easily be adjusted.

E. Install temperature-actuated, water mixing valves with check stops or shutoff valves on inlets and with shutoff valve on outlet.

1. Install cabinet-type units recessed in or surface mounted on wall as specified.

F. Install Y-pattern strainers for water on supply side of each control valve, water pressure-reducing valve, solenoid valve, and pump.

G. Install outlet boxes recessed in wall or surface mounted on wall. Install 2-by-4-inch fire-retardant-treated-wood blocking, wall reinforcement between studs. Comply with requirements for fire-retardant-treated-wood blocking in Section 06 1000 "Rough Carpentry."

H. Install hose stations with check stops or shutoff valves on inlets and with thermometer on outlet.

1. Install cabinet-type units recessed in or surface mounted on wall as specified. Install 2-by-4-inch fire-retardant-treated-wood blocking, wall reinforcement between studs. Comply with requirements for fire-retardant-treated-wood blocking in Section 06 1000 "Rough Carpentry."

I. Install ground hydrants with 1 cu. yd. of crushed gravel around drain hole. Set ground hydrants with box flush with grade.

J. Install draining-type post hydrants with 1 cu. yd. of crushed gravel around drain hole. Set post hydrants in concrete paving or in 1 cu. ft. of concrete block at grade.

K. Set nonfreeze, nondraining-type post hydrants in concrete or pavement.

L. Set freeze-resistant yard hydrants with riser pipe in concrete or pavement. Do not encase canister in concrete.

M. Install water-hammer arresters in water piping according to PDI-WH 201.

N. Install air vents at high points of water piping. Install drain piping and discharge onto floor drain.

O. Install supply-type, trap-seal primer valves with outlet piping pitched down toward drain trap a minimum of 1 percent, and connect to floor-drain body, trap, or inlet fitting. Adjust valve for proper flow.

P. Install drainage-type, trap-seal primer valves as lavatory trap with outlet piping pitched down toward drain trap a minimum of 1 percent, and connect to floor-drain body, trap, or inlet fitting.

Q. Install trap-seal primer systems with outlet piping pitched down toward drain trap a minimum of 1 percent, and connect to floor-drain body, trap, or inlet fitting. Adjust system for proper flow.

3.2 CONNECTIONS

A. Comply with requirements for ground equipment in Section 26 0526 "Grounding and Bonding for Electrical Systems."

B. Fire-retardant-treated-wood blocking is specified in Section 26 0519 "Low-Voltage Electrical Power Conductors and Cables" for electrical connections.

3.3 LABELING AND IDENTIFYING

A. Equipment Nameplates and Signs: Install engraved plastic-laminate equipment nameplate or sign on or near each of the following:

1. Pressure vacuum breakers.
2. Intermediate atmospheric-vent backflow preventers.
3. Reduced-pressure-principle backflow preventers.
4. Double-check, backflow-prevention assemblies.
5. Carbonated-beverage-machine backflow preventers.
6. Dual-check-valve backflow preventers.
7. Reduced-pressure-detector, fire-protection, backflow-preventer assemblies.
8. Double-check, detector-assembly backflow preventers.
9. Water pressure-reducing valves.
10. Calibrated balancing valves.
11. Primary, thermostatic, water mixing valves.
12. Manifold, thermostatic, water mixing-valve assemblies.
13. Photographic-process, thermostatic, water mixing-valve assemblies.
14. Primary water tempering valves.
15. Outlet boxes.
16. Hose stations.
17. Supply-type, trap-seal primer valves.
18. Trap-seal primer systems.

B. Distinguish among multiple units, inform operator of operational requirements, indicate safety and emergency precautions, and warn of hazards and improper operations, in addition to identifying unit. Nameplates and signs are specified in Section 22 0553 "Identification for Plumbing Piping and Equipment."

3.4 FIELD QUALITY CONTROL

A. Perform the following tests and inspections:

1. Test each pressure vacuum breaker and backflow preventer according to authorities having jurisdiction and the device's reference standard.

B. Domestic water piping specialties will be considered defective if they do not pass tests and inspections.

C. Prepare test and inspection reports.

3.5 ADJUSTING

A. Set field-adjustable pressure set points of water pressure-reducing valves.

B. Set field-adjustable flow set points of balancing valves.

C. Set field-adjustable temperature set points of temperature-actuated, water mixing valves.

END OF SECTION

SECTION 22 1123

DOMESTIC WATER PUMPS

PART 1 - GENERAL

1.1 RELATED DOCUMENTS

A. Drawings and general provisions of the Contract, including General and Supplementary Conditions and Division 01 Specification Sections, apply to this Section.

1.2 SUMMARY

A. Section Includes:

1. In-line, sealless centrifugal pumps.

1.3 DEFINITIONS

A. Low Voltage: As defined in NFPA 70 for circuits and equipment operating at less than 50 V or for remote-control, signaling power-limited circuits.

1.4 ACTION SUBMITTALS

A. Product Data: For each type of product indicated. Include materials of construction, rated capacities, certified performance curves with operating points plotted on curves, operating characteristics, electrical characteristics, and furnished specialties and accessories.

1.5 CLOSEOUT SUBMITTALS

A. Operation and Maintenance Data: For domestic water pumps to include in operation and maintenance manuals.

1.6 QUALITY ASSURANCE

A. Electrical Components, Devices, and Accessories: Listed and labeled as defined in NFPA 70, by a qualified testing agency, and marked for intended location and application.

B. UL Compliance: Comply with UL 778 for motor-operated water pumps.

1.7 DELIVERY, STORAGE, AND HANDLING

A. Retain shipping flange protective covers and protective coatings during storage.

B. Protect bearings and couplings against damage.

C. Comply with pump manufacturer's written rigging instructions for handling.

1.8 COORDINATION

A. Coordinate sizes and locations of concrete bases with actual equipment provided.

PART 2 - PRODUCTS

2.1 IN-LINE, SEALLESS CENTRIFUGAL PUMPS

A. Manufacturers: Subject to compliance with requirements, available manufacturers offering products that may be incorporated into the Work include, but are not limited to, the following:

1. Armstrong Pumps Inc.
2. Bell & Gossett Domestic Pump; ITT Corporation.
3. Grundfos Pumps Corp.
4. TACO Incorporated.
5. WILO USA LLC - WILO Canada Inc.

B. Description: Factory-assembled and -tested, in-line, close-coupled, canned-motor, sealless, overhung-impeller centrifugal pumps.

C. Pump Construction:

1. Pump and Motor Assembly: Hermetically sealed, replaceable-cartridge type with motor and impeller on common shaft and designed for installation with pump and motor shaft horizontal.
2. Casing: Bronze, with threaded or companion-flange connections.
3. Impeller: Plastic.
4. Motor: Single speed, unless otherwise indicated.

2.2 MOTORS

A. Comply with NEMA designation, temperature rating, service factor, enclosure type, and efficiency requirements for motors specified in Section 22 0513 "Common Motor Requirements for Plumbing Equipment."

1. Motor Sizes: Minimum size as indicated. If not indicated, large enough so driven load will not require motor to operate in service factor range above 1.0.

2.3 CONTROLS

A. Thermostats: Electric; adjustable for control of hot-water circulation pump.

1. Type: Water-immersion temperature sensor, for installation in piping.
2. Range: 65 to 200 deg F.
3. Enclosure: NEMA 250,.
4. Operation of Pump: On or off.
5. Transformer: Provide if required.
6. Power Requirement: 24 V, ac.

7. Settings: Start pump at 110 deg F and stop pump at 125 deg F.

PART 3 - EXECUTION

3.1 EXAMINATION

A. Examine roughing-in of domestic-water-piping system to verify actual locations of connections before pump installation.

3.2 PUMP INSTALLATION

A. Comply with HI 1.4.

B. Install in-line, sealless centrifugal pumps with shaft horizontal unless otherwise indicated.

C. Install thermostats in hot-water return piping.

3.3 CONNECTIONS

A. Comply with requirements for piping specified in Section 22 1116 "Domestic Water Piping." Drawings indicate general arrangement of piping, fittings, and specialties.

B. Install piping adjacent to pumps to allow service and maintenance.

C. Connect domestic water piping to pumps. Install suction and discharge piping equal to or greater than size of pump nozzles.

1. Install shutoff valve and strainer on suction side of each pump, and check, shutoff, and throttling valves on discharge side of each pump. Install valves same size as connected piping. Comply with requirements for valves specified in Section 22 0523 "General-Duty Valves for Plumbing Piping" and comply with requirements for strainers specified in Section 22 1119 "Domestic Water Piping Specialties."

D. Connect thermostats, to pumps that they control.

3.4 IDENTIFICATION

A. Comply with requirements for identification specified in Section 22 0553 "Identification for Plumbing Piping and Equipment" for identification of pumps.

3.5 STARTUP SERVICE

A. Perform startup service.

1. Complete installation and startup checks according to manufacturer's written instructions.
2. Check piping connections for tightness.
3. Clean strainers on suction piping.
4. Set thermostats, for automatic starting and stopping operation of pumps.
5. Perform the following startup checks for each pump before starting:

a. Verify bearing lubrication.
b. Verify that pump is free to rotate by hand and that pump for handling hot liquid is free to rotate with pump hot and cold. If pump is bound or drags, do not operate until cause of trouble is determined and corrected.
c. Verify that pump is rotating in the correct direction.

6. Prime pump by opening suction valves and closing drains and prepare pump for operation.
7. Start motor.
8. Open discharge valve slowly.
9. Adjust temperature settings on thermostats.
10. Adjust timer settings.

3.6 ADJUSTING

A. Adjust domestic water pumps to function smoothly and lubricate as recommended by manufacturer.

B. Adjust initial temperature set points.

C. Set field-adjustable switches and circuit-breaker trip ranges as indicated.

END OF SECTION

SECTION 22 1316

SANITARY WASTE AND VENT PIPING

PART 1 - GENERAL

1.1 RELATED DOCUMENTS

A. Drawings and general provisions of the Contract, including General and Supplementary Conditions and Division 01 Specification Sections, apply to this Section.

1.2 SUMMARY

A. Section Includes:

1. Pipe, tube, and fittings.
2. Specialty pipe fittings.
3. Encasement for underground metal piping.

B. Related Requirements:

1. Section 22 1313 "Facility Sanitary Sewers" for sanitary sewerage piping and structures outside the building.
2. Section 22 1329 "Sanitary Sewerage Pumps" for effluent and sewage pumps.
3. Section 22 6600 "Chemical-Waste Systems for Laboratory and Healthcare Facilities" for chemical-waste and vent piping systems.

1.3 ACTION SUBMITTALS

A. Product Data: For each type of product.

B. Shop Drawings: For hubless, single-stack drainage system. Include plans, elevations, sections, and details.

1.4 INFORMATIONAL SUBMITTALS

A. Seismic Qualification Certificates: For waste and vent piping, accessories, and components, from manufacturer.

1. Basis for Certification: Indicate whether withstand certification is based on actual test of assembled components or on calculation.
2. Detailed description of piping anchorage devices on which the certification is based and their installation requirements.

B. Field quality-control reports.

1.5 FIELD CONDITIONS

A. Interruption of Existing Sanitary Waste Service: Do not interrupt service to facilities occupied by Owner or others unless permitted under the following conditions and then only after arranging to provide temporary service according to requirements indicated:

1. Notify Owner's Representative no fewer than 5 days in advance of proposed interruption of sanitary waste service.
2. Do not proceed with interruption of sanitary waste service without Owner's written permission.

PART 2 - PRODUCTS

2.1 PERFORMANCE REQUIREMENTS

A. Components and installation shall be capable of withstanding the following minimum working pressure unless otherwise indicated:

1. Soil, Waste, and Vent Piping: 10-foot head of water.
2. Waste, Force-Main Piping: 100 psig.

B. Seismic Performance: Soil, waste, and vent piping and support and installation shall withstand the effects of earthquake motions determined according to ASCE/SEI 7.

2.2 PIPING MATERIALS

A. Piping materials shall bear label, stamp, or other markings of specified testing agency.

B. The product descriptions listed in the section may not all be used on this project. Refer to the Piping Material Schedules on the drawings for the specific application for each product or material. Products not shown on the schedule for the specific application may not be substituted without pre-approval from the Engineer. Where there is a conflict between the drawing schedule and specifications, the drawing schedule shall take precedent.

2.3 HUB-AND-SPIGOT, CAST-IRON SOIL PIPE AND FITTINGS

A. Pipe and Fittings: ASTM A 74, Service and Extra Heavy class(es).

B. Gaskets: ASTM C 564, rubber.

C. Calking Materials: ASTM B 29, pure lead and oakum or hemp fiber.

2.4 HUBLESS, CAST-IRON SOIL PIPE AND FITTINGS

A. Pipe and Fittings: ASTM A 888 or CISPI 301.

B. Single-Stack Aerator Fittings: ASME B16.45, hubless, cast-iron aerator and deaerator drainage fittings.

C. CISPI, Hubless-Piping Couplings:

1. Standards: ASTM C 1277 and CISPI 310.
2. Description: Stainless-steel corrugated shield with stainless-steel bands and tightening devices; and ASTM C 564, rubber sleeve with integral, center pipe stop.

D. Heavy-Duty, Hubless-Piping Couplings:

1. Standards: ASTM C 1277 and ASTM C 1540.
2. Description: Stainless-steel shield with stainless-steel bands and tightening devices; and ASTM C 564, rubber sleeve with integral, center pipe stop.

E. Cast-Iron, Hubless-Piping Couplings:

1. Standard: ASTM C 1277.
2. Description: Two-piece ASTM A 48/A 48M, cast-iron housing; stainless-steel bolts and nuts; and ASTM C 564, rubber sleeve with integral, center pipe stop.

2.5 GALVANIZED-STEEL PIPE AND FITTINGS

A. Galvanized-Steel Pipe: ASTM A 53/A 53M, Type E, Standard Weight class. Include square-cut-grooved or threaded ends matching joining method.

B. Cast-Iron Drainage Fittings: ASME B16.12, threaded.

C. Steel Pipe Pressure Fittings:

1. Steel Pipe Nipples: ASTM A 733, made of ASTM A 53/A 53M or ASTM A 106/A 106M, Schedule 40, seamless steel pipe. Include ends matching joining method.
2. Malleable-Iron Unions: ASME B16.39; Class 150; hexagonal-stock body with ball-and-socket, metal-to-metal, bronze seating surface; and female threaded ends.
3. Gray-Iron, Threaded Fittings: ASME B16.4, Class 125, standard pattern.

D. Cast-Iron Flanges: ASME B16.1, Class 125.

1. Flange Gasket Materials: ASME B16.21, full-face, flat, nonmetallic, asbestos-free, 1/8-inch maximum thickness unless thickness or specific material is indicated.
2. Flange Bolts and Nuts: ASME B18.2.1, carbon steel unless otherwise indicated.

E. Grooved-Joint, Galvanized-Steel-Pipe Appurtenances:

1. Galvanized, Grooved-End Fittings for Galvanized-Steel Piping: ASTM A 536 ductile-iron castings, ASTM A 47/A 47M malleable-iron castings, ASTM A 234/A 234M forged steel fittings, or ASTM A 106/A 106M steel pipes with dimensions matching ASTM A 53/A 53M steel pipe, and complying with AWWA C606 for grooved ends.
2. Grooved Mechanical Couplings for Galvanized-Steel Piping: ASTM F 1476, Type I. Include ferrous housing sections with continuous curved keys; EPDM-rubber gasket suitable for hot and cold water; and bolts and nuts.

2.6 STAINLESS-STEEL PIPE AND FITTINGS

A. Pipe and Fittings: ASME A112.3.1, drainage pattern with socket and spigot ends.

B. Internal Sealing Rings: Elastomeric gaskets shaped to fit socket groove.

2.7 DUCTILE-IRON PIPE AND FITTINGS

A. Ductile-Iron, Mechanical-Joint Piping:

1. Ductile-Iron Pipe: AWWA C151/A21.51, with mechanical-joint bell and plain spigot ends unless grooved or flanged ends are indicated.
2. Ductile-Iron Fittings: AWWA C110/A21.10, mechanical-joint, ductile- or gray-iron standard pattern or AWWA C153/A21.53, ductile-iron compact pattern.
3. Glands, Gaskets, and Bolts: AWWA C111/A21.11, ductile- or gray-iron glands, rubber gaskets, and steel bolts.

B. Ductile-Iron, Push-on-Joint Piping:

1. Ductile-Iron Pipe: AWWA C151/A21.51, with push-on-joint bell and plain spigot ends unless grooved or flanged ends are indicated.
2. Ductile-Iron Fittings: AWWA C110/A21.10, push-on-joint, ductile- or gray-iron standard pattern or AWWA C153/A21.53, ductile-iron compact pattern.
3. Gaskets: AWWA C111/A21.11, rubber.

C. Ductile-Iron, Grooved-Joint Piping: AWWA C151/A21.51, with round-cut-grooved ends according to AWWA C606.

D. Ductile-Iron, Grooved-End Pipe Appurtenances:

1. Grooved-End, Ductile-Iron Fittings: ASTM A 536 ductile-iron castings, with dimensions matching AWWA C110/A 21.10 ductile-iron pipe or AWWA C153/A 21.53 ductile-iron fittings, and complying with AWWA C606 for grooved ends.
2. Grooved Mechanical Couplings for Ductile-Iron Pipe: ASTM F 1476, Type I. Include ferrous housing sections with continuous curved keys; EPDM-rubber center-leg gasket suitable for hot and cold water; and bolts and nuts.

2.8 COPPER TUBE AND FITTINGS

A. Copper Type DWV Tube: ASTM B 306, drainage tube, drawn temper.

B. Copper Drainage Fittings: ASME B16.23, cast copper or ASME B16.29, wrought copper, solder-joint fittings.

C. Hard Copper Tube: ASTM B 88, Type L and Type M, water tube, drawn temper.

D. Soft Copper Tube: ASTM B 88, Type L, water tube, annealed temper.

E. Copper Pressure Fittings:

1. Copper Fittings: ASME B16.18, cast-copper-alloy or ASME B16.22, wrought-copper, solder-joint fittings. Furnish wrought-copper fittings if indicated.
2. Copper Unions: MSS SP-123, copper-alloy, hexagonal-stock body with ball-and-socket, metal-to-metal seating surfaces, and solder-joint or threaded ends.

F. Copper Flanges: ASME B16.24, Class 150, cast copper with solder-joint end.

1. Flange Gasket Materials: ASME B16.21, full-face, flat, nonmetallic, asbestos-free, 1/8-inch maximum thickness unless thickness or specific material is indicated.
2. Flange Bolts and Nuts: ASME B18.2.1, carbon steel unless otherwise indicated.

G. Solder: ASTM B 32, lead free with ASTM B 813, water-flushable flux.

2.9 ABS PIPE AND FITTINGS

A. Comply with NSF 14, "Plastics Piping Systems Components and Related Materials," for plastic piping components. Include marking with "NSF-dwv" for plastic drain, waste, and vent piping and "NSF-sewer" for plastic sewer piping.

B. Solid-Wall ABS Pipe: ASTM D 2661, Schedule 40.

C. Cellular-Core ABS Pipe: ASTM F 628, Schedule 40.

D. ABS Socket Fittings: ASTM D 2661, made to ASTM D 3311, drain, waste, and vent patterns.

E. Solvent Cement: ASTM D 2235.

2.10 PVC PIPE AND FITTINGS

A. Comply with NSF 14, "Plastics Piping Systems Components and Related Materials," for plastic piping components. Include marking with "NSF-dwv" for plastic drain, waste, and vent piping and "NSF-sewer" for plastic sewer piping.

B. Solid-Wall PVC Pipe: ASTM D 2665, drain, waste, and vent.

C. Cellular-Core PVC Pipe: ASTM F 891, Schedule 40.

D. PVC Socket Fittings: ASTM D 2665, made to ASTM D 3311, drain, waste, and vent patterns and to fit Schedule 40 pipe.

E. Adhesive Primer: ASTM F 656.

F. Solvent Cement: ASTM D 2564.

2.11 SPECIALTY PIPE FITTINGS

A. Transition Couplings:

1. Fitting-Type Transition Couplings: Manufactured piping coupling or specified piping system fitting.
2. Unshielded, Nonpressure Transition Couplings:

    a. Standard: ASTM C 1173.
    b. Description: Elastomeric, sleeve-type, reducing or transition pattern. Include shear ring and corrosion-resistant-metal tension band and tightening mechanism on each end.
    c. End Connections: Same size as and compatible with pipes to be joined.
    d. Sleeve Materials:

        1) For Cast-Iron Soil Pipes: ASTM C 564, rubber.
        2) For Plastic Pipes: ASTM F 477, elastomeric seal or ASTM D 5926, PVC.
        3) For Dissimilar Pipes: ASTM D 5926, PVC or other material compatible with pipe materials being joined.

3. Shielded, Nonpressure Transition Couplings:

    a. Standard: ASTM C 1460.
    b. Description: Elastomeric or rubber sleeve with full-length, corrosion-resistant outer shield and corrosion-resistant-metal tension band and tightening mechanism on each end.
    c. End Connections: Same size as and compatible with pipes to be joined.

4. Pressure Transition Couplings:

    a. Standard: AWWA C219.
    b. Description: Metal, sleeve-type same size as, with pressure rating at least equal to, and ends compatible with, pipes to be joined.
    c. Center-Sleeve Material: Manufacturer's Standard.
    d. Gasket Material: Natural or synthetic rubber.
    e. Metal Component Finish: Corrosion-resistant coating or material.

B. Dielectric Fittings:

1. Dielectric Unions:

    a. Description:

        1) Standard: ASSE 1079.
        2) Pressure Rating: 125 psig minimum at 180 deg F.
        3) End Connections: Solder-joint copper alloy and threaded ferrous.

2. Dielectric Flanges:

    a.

    b. Description:

        1) Standard: ASSE 1079.
        2) Factory-fabricated, bolted, companion-flange assembly.
        3) Pressure Rating: 125 psig minimum at 180 deg F.
        4) End Connections: Solder-joint copper alloy and threaded ferrous; threaded solder-joint copper alloy and threaded ferrous.

3. Dielectric-Flange Insulating Kits:

    a. Description:

        1) Nonconducting materials for field assembly of companion flanges.
        2) Pressure Rating: 150 psig.
        3) Gasket: Neoprene or phenolic.
        4) Bolt Sleeves: Phenolic or polyethylene.
        5) Washers: Phenolic with steel backing washers.

4. Dielectric Nipples:

    a. Description:

        1) Standard: IAPMO PS 66.
        2) Electroplated steel nipple.

3) Pressure Rating: 300 psig at 225 deg F.
4) End Connections: Male threaded or grooved.
5) Lining: Inert and noncorrosive, propylene.

2.12 ENCASEMENT FOR UNDERGROUND METAL PIPING

A. Standard: ASTM A 674 or AWWA C105/A 21.5.

B. Material: high-density, cross-laminated polyethylene film of 0.004-inch minimum thickness.

C. Form: tube.

D. Color: Black or natural.

PART 3 - EXECUTION

3.1 EARTH MOVING

A. Comply with requirements for excavating, trenching, and backfilling specified in Section 31 2000 "Earth Moving."

3.2 PIPING INSTALLATION

A. Drawing plans, schematics, and diagrams indicate general location and arrangement of piping systems.

1. Indicated locations and arrangements were used to size pipe and calculate friction loss, expansion, pump sizing, and other design considerations.
2. Install piping as indicated unless deviations to layout are approved on coordination drawings.

B. Install piping in concealed locations unless otherwise indicated and except in equipment rooms and service areas.

C. Install piping indicated to be exposed and piping in equipment rooms and service areas at right angles or parallel to building walls. Diagonal runs are prohibited unless specifically indicated otherwise.

D. Install piping above accessible ceilings to allow sufficient space for ceiling panel removal.

E. Install piping to permit valve servicing.

F. Install piping at indicated slopes.

G. Install piping free of sags and bends.

H. Install fittings for changes in direction and branch connections.

I. Install piping to allow application of insulation.

J. Install seismic restraints on piping. Comply with requirements for seismic-restraint devices specified in Section 22 0548 "Vibration and Seismic Controls for Plumbing Piping and Equipment."

K. Make changes in direction for soil and waste drainage and vent piping using appropriate branches, bends, and long-sweep bends.

1. Sanitary tees and short-sweep 1/4 bends may be used on vertical stacks if change in direction of flow is from horizontal to vertical.
2. Use long-turn, double Y-branch and 1/8-bend fittings if two fixtures are installed back to back or side by side with common drain pipe.

    a. Straight tees, elbows, and crosses may be used on vent lines.

3. Do not change direction of flow more than 90 degrees.
4. Use proper size of standard increasers and reducers if pipes of different sizes are connected.

    a. Reducing size of waste piping in direction of flow is prohibited.

L. Lay buried building waste piping beginning at low point of each system.

1. Install true to grades and alignment indicated, with unbroken continuity of invert. Place hub ends of piping upstream.
2. Install required gaskets according to manufacturer's written instructions for use of lubricants, cements, and other installation requirements.
3. Maintain swab in piping and pull past each joint as completed.

M. Install soil and waste and vent piping at the following minimum slopes unless otherwise indicated:

1. Building Sanitary Waste: 2 percent downward in direction of flow for piping NPS 3 and smaller; 1 percent downward in direction of flow for piping NPS 4 and larger.
2. Horizontal Sanitary Waste Piping: 2 percent downward in direction of flow.
3. Vent Piping: 1 percent down toward vertical fixture vent or toward vent stack.

N. Install cast-iron soil piping according to CISPI's "Cast Iron Soil Pipe and Fittings Handbook," Chapter IV, "Installation of Cast Iron Soil Pipe and Fittings."

1. Install encasement on underground piping according to ASTM A 674 or AWWA C105/A 21.5.

O. Install steel piping according to applicable plumbing code.

P. Install stainless-steel piping according to ASME A112.3.1 and applicable plumbing code.

Q. Install aboveground copper tubing according to CDA's "Copper Tube Handbook."

R. Install aboveground ABS piping according to ASTM D 2661.

S. Install aboveground PVC piping according to ASTM D 2665.

T. Install underground ABS and PVC piping according to ASTM D 2321.

U. Install engineered soil and waste and vent piping systems as follows:

1. Combination Waste and Vent: Comply with standards of authorities having jurisdiction.
2. Hubless, Single-Stack Drainage System: Comply with ASME B16.45 and hubless, single-stack aerator fitting manufacturer's written installation instructions.
3. Reduced-Size Venting: Comply with standards of authorities having jurisdiction.

V. Install underground, ductile-iron, force-main piping according to AWWA C600.

1. Install buried piping inside building between wall and floor penetrations and connection to sanitary sewer piping outside building with restrained joints.
2. Anchor pipe to wall or floor. Install thrust-block supports at vertical and horizontal offsets.
3. Install encasement on piping according to ASTM A 674 or AWWA C105/A 21.5.

W. Install underground, copper, force-main tubing according to CDA's "Copper Tube Handbook."

1. Install encasement on piping according to ASTM A 674 or AWWA C105/A 21.5.

X. Install force mains at elevations indicated.

Y. Plumbing Specialties:

1. Install backwater valves in sanitary waster gravity-flow piping.

a. Comply with requirements for backwater valves specified in Section 22 1319 "Sanitary Waste Piping Specialties."

2. Install cleanouts at grade and extend to where building sanitary drains connect to building sanitary sewers in sanitary waste gravity-flow piping.

a. Install cleanout fitting with closure plug inside the building in sanitary drainage force-main piping.
b. Comply with requirements for cleanouts specified in Section 22 1319 "Sanitary Waste Piping Specialties."

3. Install drains in sanitary waste gravity-flow piping.

a. Comply with requirements for drains specified in Section 22 1319 "Sanitary Waste Piping Specialties."

Z. Do not enclose, cover, or put piping into operation until it is inspected and approved by authorities having jurisdiction.

AA. Install sleeves for piping penetrations of walls, ceilings, and floors.

1. Comply with requirements for sleeves specified in Section 22 0517 "Sleeves and Sleeve Seals for Plumbing Piping."

BB. Install sleeve seals for piping penetrations of concrete walls and slabs.

1. Comply with requirements for sleeve seals specified in Section 22 0517 "Sleeves and Sleeve Seals for Plumbing Piping."

CC. Install escutcheons for piping penetrations of walls, ceilings, and floors.

1. Comply with requirements for escutcheons specified in Section 22 0518 "Escutcheons for Plumbing Piping."

3.3 JOINT CONSTRUCTION

A. Join hub-and-spigot, cast-iron soil piping with gasket joints according to CISPI's "Cast Iron Soil Pipe and Fittings Handbook" for compression joints.

B. Join hub-and-spigot, cast-iron soil piping with calked joints according to CISPI's "Cast Iron Soil Pipe and Fittings Handbook" for lead-and-oakum calked joints.

C. Join hubless, cast-iron soil piping according to CISPI 310 and CISPI's "Cast Iron Soil Pipe and Fittings Handbook" for hubless-piping coupling joints.

D. Threaded Joints: Thread pipe with tapered pipe threads according to ASME B1.20.1.

1. Cut threads full and clean using sharp dies.
2. Ream threaded pipe ends to remove burrs and restore full ID. Join pipe fittings and valves as follows:

    a. Apply appropriate tape or thread compound to external pipe threads unless dry seal threading is specified.
    b. Damaged Threads: Do not use pipe or pipe fittings with threads that are corroded or damaged.
    c. Do not use pipe sections that have cracked or open welds.

E. Join stainless-steel pipe and fittings with gaskets according to ASME A112.3.1.

F. Join copper tube and fittings with soldered joints according to ASTM B 828. Use ASTM B 813, water-flushable, lead-free flux and ASTM B 32, lead-free-alloy solder.

G. Grooved Joints: Cut groove ends of pipe according to AWWA C606. Lubricate and install gasket over ends of pipes or pipe and fitting. Install coupling housing sections, over gasket, with keys seated in piping grooves. Install and tighten housing bolts.

H. Flanged Joints: Align bolt holes. Select appropriate gasket material, size, type, and thickness. Install gasket concentrically positioned. Use suitable lubricants on bolt threads. Torque bolts in cross pattern.

I. Plastic, Nonpressure-Piping, Solvent-Cement Joints: Clean and dry joining surfaces. Join pipe and fittings according to the following:

1. Comply with ASTM F 402 for safe-handling practice of cleaners, primers, and solvent cements.
2. ABS Piping: Join according to ASTM D 2235 and ASTM D 2661 appendixes.
3. PVC Piping: Join according to ASTM D 2855 and ASTM D 2665 appendixes.

3.4 SPECIALTY PIPE FITTING INSTALLATION

A. Transition Couplings:

1. Install transition couplings at joints of piping with small differences in ODs.
2. In Waste Drainage Piping: Shielded, nonpressure transition couplings.
3. In Aboveground Force Main Piping: Fitting-type transition couplings.
4. In Underground Force Main Piping:

    a. NPS 1-1/2 and Smaller: Fitting-type transition couplings.

b. NPS 2 and Larger: Pressure transition couplings.

B. Dielectric Fittings:

1. Install dielectric fittings in piping at connections of dissimilar metal piping and tubing.
2. Dielectric Fittings for NPS 2 and Smaller: Use dielectric nipples or unions.
3. Dielectric Fittings for NPS 2-1/2 to NPS 4 Use dielectric flange kits or nipples.
4. Dielectric Fittings for NPS 5 and Larger: Use dielectric flange kits.

3.5 VALVE INSTALLATION

A. Comply with requirements in Section 22 0523.12 "Ball Valves for Plumbing Piping," Section 22 0523.13 "Butterfly Valves for Plumbing Piping," Section 22 0523.14 "Check Valves for Plumbing Piping," and Section 22 0523.15 "Gate Valves for Plumbing Piping" for general-duty valve installation requirements.

B. Shutoff Valves:

1. Install shutoff valve on each sewage pump discharge.
2. Install gate or full-port ball valve for piping NPS 2 and smaller.
3. Install gate valve for piping NPS 2-1/2 and larger.

C. Check Valves: Install swing check valve, between pump and shutoff valve, on each sewage pump discharge.

D. Backwater Valves: Install backwater valves in piping subject to backflow.

1. Horizontal Piping: Horizontal backwater valves. Use normally closed type unless otherwise indicated.
2. Floor Drains: Drain outlet backwater valves unless drain has integral backwater valve.
3. Install backwater valves in accessible locations.
4. Comply with requirements for backwater valve specified in Section 22 1319 "Sanitary Waste Piping Specialties."

3.6 HANGER AND SUPPORT INSTALLATION

A. Comply with requirements for seismic-restraint devices specified in Section 22 0548 "Vibration and Seismic Controls for Plumbing Piping and Equipment."

B. Comply with requirements for pipe hanger and support devices and installation specified in Section 22 0529 "Hangers and Supports for Plumbing Piping and Equipment."

1. Install carbon-steel pipe hangers for horizontal piping in noncorrosive environments.
2. Install stainless-steel pipe hangers for horizontal piping in corrosive environments.
3. Install carbon-steel pipe support clamps for vertical piping in noncorrosive environments.
4. Install stainless-steel pipe support clamps for vertical piping in corrosive environments.
5. Vertical Piping: MSS Type 8 or Type 42, clamps.
6. Install individual, straight, horizontal piping runs:

a. 100 Feet and Less: MSS Type 1, adjustable, steel clevis hangers.
b. Longer Than 100 Feet: MSS Type 43, adjustable roller hangers.
c. Longer Than 100 Feet if Indicated: MSS Type 49, spring cushion rolls.

7. Multiple, Straight, Horizontal Piping Runs 100 Feet or Longer: MSS Type 44, pipe rolls. Support pipe rolls on trapeze.
8. Base of Vertical Piping: MSS Type 52, spring hangers.

C. Support horizontal piping and tubing within 12 inches of each fitting, valve, and coupling.

D. Support vertical piping and tubing at base and at each floor.

E. Rod diameter may be reduced one size for double-rod hangers, with 3/8-inch minimum rods.

F. Install hangers for cast-iron soil piping with the following maximum horizontal spacing and minimum rod diameters:

1. NPS 1-1/2 and NPS 2: 60 inches with 3/8-inch rod.
2. NPS 3: 60 inches with 1/2-inch rod.
3. NPS 4 and NPS 5: 60 inches with 5/8-inch rod.
4. NPS 6 and NPS 8: 60 inches with 3/4-inch rod.
5. NPS 10 and NPS 12: 60 inches with 7/8-inch rod.
6. Spacing for 10-foot lengths may be increased to 10 feet. Spacing for fittings is limited to 60 inches.

G. Install supports for vertical cast-iron soil piping every 15 feet.

H. Install hangers for steel piping with the following maximum horizontal spacing and minimum rod diameters:

1. NPS 1-1/4: 84 inches with 3/8-inch rod.
2. NPS 1-1/2: 108 inches with 3/8-inch rod.
3. NPS 2: 10 feet with 3/8-inch rod.
4. NPS 2-1/2: 11 feet with 1/2-inch rod.
5. NPS 3: 12 feet with 1/2-inch rod.
6. NPS 4 and NPS 5: 12 feet with 5/8-inch rod.
7. NPS 6 and NPS 8: 12 feet with 3/4-inch rod.
8. NPS 10 and NPS 12: 12 feet with 7/8-inch rod.

I. Install supports for vertical steel piping every 15 feet.

J. Install hangers for stainless-steel piping with the following maximum horizontal spacing and minimum rod diameters:

1. NPS 2: 84 inches with 3/8-inch rod.
2. NPS 3: 96 inches with 1/2-inch rod.
3. NPS 4: 108 inches with 1/2-inch rod.
4. NPS 6: 10 feet with 5/8-inch rod.

K. Install supports for vertical stainless-steel piping every 10 feet.

L. Install hangers for copper tubing with the following maximum horizontal spacing and minimum rod diameters:

1. NPS 1-1/4: 72 inches with 3/8-inch rod.
2. NPS 1-1/2 and NPS 2: 96 inches with 3/8-inch rod.
3. NPS 2-1/2: 108 inches with 1/2-inch rod.
4. NPS 3 and NPS 5: 10 feet with 1/2-inch rod.
5. NPS 6: 10 feet with 5/8-inch rod.

6. NPS 8: 10 feet with 3/4-inch rod.

M. Install supports for vertical copper tubing every 10 feet.

N. Install hangers for ABS and PVC piping with the following maximum horizontal spacing and minimum rod diameters:

1. NPS 1-1/2 and NPS 2: 48 inches with 3/8-inch rod.
2. NPS 3: 48 inches with 1/2-inch rod.
3. NPS 4 and NPS 5: 48 inches with 5/8-inch rod.
4. NPS 6 and NPS 8: 48 inches with 3/4-inch rod.
5. NPS 10 and NPS 12: 48 inches with 7/8-inch rod.

O. Install supports for vertical ABS and PVC piping every 48 inches.

P. Support piping and tubing not listed above according to MSS SP-58 and manufacturer's written instructions.

3.7 CONNECTIONS

A. Drawings indicate general arrangement of piping, fittings, and specialties.

B. Connect soil and waste piping to exterior sanitary sewerage piping. Use transition fitting to join dissimilar piping materials.

C. Connect waste and vent piping to the following:

1. Plumbing Fixtures: Connect waste piping in sizes indicated, but not smaller than required by plumbing code.
2. Plumbing Fixtures and Equipment: Connect atmospheric vent piping in sizes indicated, but not smaller than required by authorities having jurisdiction.
3. Plumbing Specialties: Connect waste and vent piping in sizes indicated, but not smaller than required by plumbing code.
4. Install test tees (wall cleanouts) in conductors near floor and floor cleanouts with cover flush with floor.
5. Install horizontal backwater valves in pit with pit cover flush with floor.
6. Comply with requirements for backwater valves, cleanouts, and drains specified in Section 22 1319 "Sanitary Waste Piping Specialties."
7. Equipment: Connect waste piping as indicated.

    a. Provide shutoff valve if indicated and union for each connection.
    b. Use flanges instead of unions for connections NPS 2-1/2 and larger.

D. Connect force-main piping to the following:

1. Sanitary Sewer: To exterior force main.
2. Sewage Pump: To sewage pump discharge.

E. Where installing piping adjacent to equipment, allow space for service and maintenance of equipment.

F. Make connections according to the following unless otherwise indicated:

1. Install unions, in piping NPS 2 and smaller, adjacent to each valve and at final connection to each piece of equipment.
2. Install flanges, in piping NPS 2-1/2 and larger, adjacent to flanged valves and at final connection to each piece of equipment.

3.8 IDENTIFICATION

A. Identify exposed sanitary waste and vent piping.

B. Comply with requirements for identification specified in Section 22 0553 "Identification for Plumbing Piping and Equipment."

3.9 FIELD QUALITY CONTROL

A. During installation, notify authorities having jurisdiction at least 24 hours before inspection must be made. Perform tests specified below in presence of authorities having jurisdiction.

1. Roughing-in Inspection: Arrange for inspection of piping before concealing or closing-in after roughing-in and before setting fixtures.
2. Final Inspection: Arrange for final inspection by authorities having jurisdiction to observe tests specified below and to ensure compliance with requirements.

B. Reinspection: If authorities having jurisdiction find that piping will not pass test or inspection, make required corrections and arrange for reinspection.

C. Reports: Prepare inspection reports and have them signed by authorities having jurisdiction.

D. Test sanitary waste and vent piping according to procedures of authorities having jurisdiction or, in absence of published procedures, as follows:

1. Test for leaks and defects in new piping and parts of existing piping that have been altered, extended, or repaired.

    a. If testing is performed in segments, submit separate report for each test, complete with diagram of portion of piping tested.

2. Leave uncovered and unconcealed new, altered, extended, or replaced waste and vent piping until it has been tested and approved.

    a. Expose work that was covered or concealed before it was tested.

3. Roughing-in Plumbing Test Procedure: Test waste and vent piping except outside leaders on completion of roughing-in.

    a. Close openings in piping system and fill with water to point of overflow, but not less than 10-foot head of water.
    b. From 15 minutes before inspection starts to completion of inspection, water level must not drop.
    c. Inspect joints for leaks.

4. Finished Plumbing Test Procedure: After plumbing fixtures have been set and traps filled with water, test connections and prove they are gastight and watertight.

a. Plug vent-stack openings on roof and building drains where they leave building. Introduce air into piping system equal to pressure of 1-inch wg.
b. Use U-tube or manometer inserted in trap of water closet to measure this pressure.
c. Air pressure must remain constant without introducing additional air throughout period of inspection.
d. Inspect plumbing fixture connections for gas and water leaks.

5. Repair leaks and defects with new materials and retest piping, or portion thereof, until satisfactory results are obtained.
6. Prepare reports for tests and required corrective action.

E. Test force-main piping according to procedures of authorities having jurisdiction or, in absence of published procedures, as follows:

1. Leave uncovered and unconcealed new, altered, extended, or replaced force-main piping until it has been tested and approved.

a. Expose work that was covered or concealed before it was tested.

2. Cap and subject piping to static-water pressure of 50 psig above operating pressure, without exceeding pressure rating of piping system materials.

a. Isolate test source and allow to stand for four hours.
b. Leaks and loss in test pressure constitute defects that must be repaired.

3. Repair leaks and defects with new materials and retest piping, or portion thereof, until satisfactory results are obtained.
4. Prepare reports for tests and required corrective action.

3.10 CLEANING AND PROTECTION

A. Clean interior of piping. Remove dirt and debris as work progresses.

B. Protect sanitary waste and vent piping during remainder of construction period to avoid clogging with dirt and debris and to prevent damage from traffic and construction work.

C. Place plugs in ends of uncompleted piping at end of day and when work stops.

D. Exposed ABS and PVC Piping: Protect plumbing vents exposed to sunlight with two coats of water-based latex paint.

E. Repair damage to adjacent materials caused by waste and vent piping installation.

END OF SECTION

SECTION 22 1319

SANITARY WASTE PIPING SPECIALTIES

PART 1 - GENERAL

1.1 RELATED DOCUMENTS

A. Drawings and general provisions of the Contract, including General and Supplementary Conditions and Division 01 Specification Sections, apply to this Section.

1.2 SUMMARY

A. Section Includes:

1. Backwater valves.
2. Cleanouts.
3. Air-admittance valves.
4. Roof flashing assemblies.
5. Through-penetration firestop assemblies.
6. Miscellaneous sanitary drainage piping specialties.
7. FOG disposal systems.

B. Related Requirements:

1. Section 22 1423 "Storm Drainage Piping Specialties" for trench drains for storm water, channel drainage systems for storm water, roof drains, and catch basins.
2. Section 33 4100 "Storm Utility Drainage Piping" for storm drainage piping and piping specialties outside the building.

1.3 DEFINITIONS

A. ABS: Acrylonitrile-butadiene-styrene.

B. FOG: Fats, oils, and greases.

C. PVC: Polyvinyl chloride.

1.4 ACTION SUBMITTALS

A. Product Data: For each type of product. Include rated capacities, operating characteristics, and accessories for the following:

1. FOG disposal systems.

B. Shop Drawings:

1. Show fabrication and installation details for frost-resistant vent terminals.
2. Wiring Diagrams: Power, signal, and control wiring.

1.5 INFORMATIONAL SUBMITTALS

A. Seismic Qualification Certificates: For FOG disposal systems, accessories, and components, from manufacturer.

1. Basis for Certification: Indicate whether withstand certification is based on actual test of assembled components or on calculation.
2. Dimensioned Outline Drawings of Equipment Unit: Identify center of gravity and locate and describe mounting and anchorage provisions.
3. Detailed description of equipment anchorage devices on which the certification is based and their installation requirements.

B. Field quality-control reports.

1.6 CLOSEOUT SUBMITTALS

A. Operation and Maintenance Data: For sanitary waste piping specialties to include in emergency, operation, and maintenance manuals.

1.7 MAINTENANCE MATERIAL SUBMITTALS

A. Furnish extra materials described below that match products installed and that are packaged with protective covering for storage and identified with labels describing contents.

1. Cultures: Provide 1-gal. bottles of bacteria culture recommended by manufacturer of FOG disposal systems equal to 200 percent of amount installed, but no fewer than two 1-gal. bottles.

PART 2 - PRODUCTS

2.1 The product descriptions listed in the section may not all be used on this project. Refer to the Equipment Schedules and details on the drawings for the specific application for each product or material. Products not shown on the schedule or details for the specific application may not be substituted without pre-approval from the Engineer. Where there is a conflict between the drawing schedule and specifications, the drawing schedule shall take precedent.

2.2 ASSEMBLY DESCRIPTIONS

A. Sanitary waste piping specialties shall bear label, stamp, or other markings of specified testing agency.

B. Comply with NSF 14 for plastic sanitary waste piping specialty components.

C. Electrical Components, Devices, and Accessories: Listed and labeled as defined in NFPA 70, by a qualified testing, and marked for intended location and application.

2.3 BACKWATER VALVES

A. Horizontal, Cast-Iron Backwater Valves:

1. Standard: ASME A112.14.1.
2. Size: Same as connected piping.
3. Body: Cast iron.
4. Cover: Cast iron with bolted or threaded access check valve.
5. End Connections: Hub and spigot or hubless.
6. Type Check Valve: Removable, bronze, swing check, factory assembled, or field modified to hang open for airflow unless subject to backflow condition.
7. Extension: ASTM A 74, Service class; full-size, cast-iron, soil-pipe extension to field-installed cleanout at floor; replaces backwater valve cover.

B. Drain-Outlet Backwater Valves:

1. Size: Same as floor drain outlet.
2. Body: Cast iron or bronze made for vertical installation in bottom outlet of floor drain.
3. Check Valve: Removable ball float.
4. Inlet: Threaded.
5. Outlet: Threaded or spigot.

C. Horizontal, Plastic Backwater Valves:

1. Size: Same as connected piping.
2. Body: ABS or PVC.
3. Cover: Same material as body with threaded access to check valve.
4. Check Valve: Removable swing check.
5. End Connections: Socket type.

2.4 CLEANOUTS

A. Cast-Iron Exposed Cleanouts:

1. Standard: ASME A112.36.2M.
2. Size: Same as connected drainage piping
3. Body Material: Hub-and-spigot, cast-iron soil pipe T-branch or Hubless, cast-iron soil pipe test tee as required to match connected piping per the piping schedules on drawings.
4. Closure Plug Size: Same as or not more than one size smaller than cleanout size.

B. Stainless-Steel Exposed Cleanouts:

1. Standard: ASME A112.3.1.
2. Size: Same as connected drainage piping
3. Body Material: Stainless-steel tee with side cleanout as required to match connected piping.
4. Closure: Stainless-steel plug with seal.

C. Cast-Iron Exposed Floor Cleanouts:

1. Standard: ASME A112.36.2M heavy-duty, adjustable housing, adjustable housing cleanout.
2. Size: Same as connected branch.
3. Body or Ferrule: Cast iron.

4. Clamping Device: Required.
5. Outlet Connection: Same type as pipe.
6. Closure: Brass plug.
7. Adjustable Housing Material: Cast iron with threads, setscrews or other device.
8. Frame and Cover Material and Finish: Polished bronze material and finish.
9. Frame and Cover Shape: Round.
10. Top Loading Classification: Extra Heavy Duty.
11. Riser: ASTM A 74, Extra-Heavy class, cast-iron drainage pipe fitting and riser to cleanout.

D. Stainless-Steel Exposed Floor Cleanouts:

1. Standard: ASME A112.3.1.
2. Size: Same as connected branch.
3. Housing: Stainless steel.
4. Closure: Stainless steel with seal.
5. Riser: ASTM A 74, Extra-Heavy stainless-steel drainage pipe fitting and riser to cleanout.
6. Body or Ferrule: Stainless steel.
7. Clamping Device: Required.
8. Outlet Connection: Same as pipe.
9. Closure: Brass plug.
10. Adjustable Housing Material: Cast iron with threads, setscrews or other device.
11. Frame and Cover Material and Finish: Polished bronze.
12. Frame and Cover Shape: Round.
13. Top Loading Classification: Extra Heavy Duty.

E. Cast-Iron Wall Cleanouts:

1. Standard: ASME A112.36.2M. Include wall access.
2. Size: Same as connected drainage piping.
3. Body: Hub-and-spigot, cast-iron soil pipe T-branch or Hubless, cast-iron soil pipe test tee as required to match connected piping.
4. Closure Plug:

    a. Brass.
    b. Countersunk or raised head.
    c. Drilled and threaded for cover attachment screw.
    d. Size: Same as or not more than one size smaller than cleanout size.

5. Wall Access: Round, stainless-steel cover plate with screw.

F. Plastic Floor Cleanouts:

1. Size: Same as connected branch.
2. Body: PVC.
3. Closure Plug: PVC.
4. Riser: Drainage pipe fitting and riser to cleanout of same material as drainage piping.

2.5 AIR-ADMITTANCE VALVES

A. Fixture Air-Admittance Valves:

1. Standard: ASSE 1051, Type A for single fixture or Type B for branch piping.
2. Housing: Plastic.

3. Operation: Mechanical sealing diaphragm.
4. Size: Same as connected fixture or branch vent piping.

B. Stack Air-Admittance Valves:

1. Standard: ASSE 1050 for vent stacks.
2. Housing: Plastic.
3. Operation: Mechanical sealing diaphragm.
4. Size: Same as connected stack vent or vent stack.

C. Wall Box for Air-Admittance Valves:

1. Description: White plastic housing with white plastic grille, made for recessed installation. Include bottom pipe connection and space to contain one air-admittance valve.
2. Size: Approximately 9 inches wide by 8 inches high by 4 inches deep.

2.6 ROOF FLASHING ASSEMBLIES

A. Roof Flashing Assemblies:

1. Description: Manufactured assembly made of 6.0-lb/sq. ft., 0.0938-inch-thick, lead flashing collar and skirt extending at least 8 inches from pipe, with galvanized-steel boot reinforcement and counterflashing fitting.

a. Low-Silhouette Vent Cap: With vandal-proof vent cap.

2.7 THROUGH-PENETRATION FIRESTOP ASSEMBLIES

A. Through-Penetration Firestop Assemblies:

1. Standard: UL 1479 assembly of sleeve-and-stack fitting with firestopping plug.
2. Size: Same as connected soil, waste, or vent stack.
3. Sleeve: Molded-PVC plastic, of length to match slab thickness and with integral nailing flange on one end for installation in cast-in-place concrete slabs.
4. Stack Fitting for plastic stacks: ASTM A 48/A 48M, gray-iron, hubless-pattern wye branch with neoprene O-ring at base and gray-iron plug in thermal-release harness. Include PVC protective cap for plug.

5. Special Coating for corrosion-resistant plastic stacks: Corrosion resistant on interior of fittings.

2.8 MISCELLANEOUS SANITARY DRAINAGE PIPING SPECIALTIES

A. Open Drains:

1. Description: Shop or field fabricate from ASTM A 74, Service class, hub-and-spigot, cast-iron soil-pipe fittings. Include P-trap, hub-and-spigot riser section; and where required, increaser fitting joined with ASTM C 564 rubber gaskets.
2. Size: Same as connected waste piping with increaser fitting of size indicated.

B. Deep-Seal Traps:

1. Description: Cast-iron or bronze casting, with inlet and outlet matching connected piping and cleanout trap-seal primer valve connection.
2. Size: Same as connected waste piping.

    a. NPS 2: 4-inch- minimum water seal.
    b. NPS 2-1/2 and Larger: 5-inch- minimum water seal.

C. Floor-Drain, Trap-Seal Primer Fittings:

1. Description: Cast iron, with threaded inlet and threaded or spigot outlet, and trap-seal primer valve connection.
2. Size: Same as floor drain outlet with NPS 1/2 side inlet.

D. Air-Gap Fittings:

1. Standard: ASME A112.1.2, for fitting designed to ensure fixed, positive air gap between installed inlet and outlet piping.
2. Body: Bronze or cast iron.
3. Inlet: Opening in top of body.
4. Outlet: Larger than inlet.
5. Size: Same as connected waste piping and with inlet large enough for associated indirect waste piping.

E. Sleeve Flashing Device:

1. Description: Manufactured, cast-iron fitting, with clamping device that forms sleeve for pipe floor penetrations of floor membrane. Include galvanized-steel pipe extension in top of fitting that will extend 2 inches above finished floor and galvanized-steel pipe extension in bottom of fitting that will extend through floor slab.
2. Size: As required for close fit to riser or stack piping.

F. Stack Flashing Fittings:

1. Description: Counterflashing-type, cast-iron fitting, with bottom recess for terminating roof membrane, and with threaded or hub top for extending vent pipe.
2. Size: Same as connected stack vent or vent stack.

G. Vent Caps:

1. Description: Cast-iron body with threaded or hub inlet and vandal-proof design. Include vented hood and setscrews to secure to vent pipe.
2. Size: Same as connected stack vent or vent stack.

H. Frost-Resistant Vent Terminals:

1. Description: Manufactured or shop-fabricated assembly constructed of copper, lead-coated copper, or galvanized steel.
2. Design: To provide 1-inch enclosed air space between outside of pipe and inside of flashing collar extension, with counterflashing.

I. Expansion Joints:

1. Standard: ASME A112.6.4.
2. Body: Cast iron with bronze sleeve, packing, and gland.
3. End Connections: Matching connected piping.

4. Size: Same as connected soil, waste, or vent piping.

2.9 FOG DISPOSAL SYSTEMS

A. FOG Disposal Systems:

1. Standard: ASME A112.14.6, for removing solids from and breaking down and digesting suspended fats, oils, and greases from food-preparation or processing wastewater.
2. Flow-Control Fitting: Matching unit size.
3. Strainer Unit: Stainless-steel housing with aluminum cover and removable-basket-type, stainless-steel, wire-mesh strainer. Include pressure plug instead of cover. Include extra basket. Include stainless-steel extension.
4. Media Chamber: Stainless-steel housing and aluminum cover, with internal baffles, piping, plastic coalescing surfaces, and clarifier section with test ports. Include stainless-steel extension.
5. Shelf: Stainless steel, 19-1/2 inches wide by 13 inches high by 8-3/4 inches deep, for metering pump, control devices, and culture bottle.
6. Culture Metering Pump, Timer, Control, and Tubing: Proprietary.
7. Culture: Include 1-gal. bottle, as recommended by unit manufacturer.
8. Piping: Waste and vent piping is specified in Section 22 1316 "Sanitary Waste and Vent Piping."

2.10 MOTORS

A. General requirements for motors are specified in Section 22 0513 "Common Motor Requirements for Plumbing Equipment."

1. Motor Sizes: Minimum size as indicated. If not indicated, motor shall be large enough, so driven load will not require motor to operate in service factor range above 1.0.

PART 3 - EXECUTION

3.1 INSTALLATION

A. Equipment Mounting:

1. Install FOG disposal systems on cast-in-place concrete equipment base(s).

   a. Comply with requirements for equipment bases and foundations specified in Section 03 3000 "Cast-in-Place Concrete.

2. Comply with requirements for vibration-isolation and seismic-control devices specified in Section 22 0548 "Vibration and Seismic Controls for Plumbing Piping and Equipment."
3. Comply with requirements for vibration-isolation devices specified in Section 22 0548.13 "Vibration Controls for Plumbing Piping and Equipment."

B. Install backwater valves in building drain piping.

1. For interior installation, provide cleanout deck plate flush with floor and centered over backwater valve cover, and of adequate size to remove valve cover for servicing.

C. Install cleanouts in aboveground piping and building drain piping according to the following, unless otherwise indicated:

1. Size same as drainage piping up to NPS 4. Use NPS 4 for larger drainage piping unless larger cleanout is indicated.
2. Locate at each change in direction of piping greater than 45 degrees.
3. Locate at minimum intervals of 50 feet for piping NPS 4 and smaller and 100 feet for larger piping.
4. Locate at base of each vertical soil and waste stack.

D. For floor cleanouts for piping below floors, install cleanout deck plates with top flush with finished floor.

E. For cleanouts located in concealed piping, install cleanout wall access covers, of types indicated, with frame and cover flush with finished wall.

F. Install roof flashing assemblies on sanitary stack vents and vent stacks that extend through roof. Comply with requirements in Section 07 6200 "Sheet Metal Flashing and Trim."

G. Install through-penetration firestop assemblies in plastic conductors and stacks at floor penetrations.

1. Comply with requirements in Section 07 8413 "Penetration Firestopping."

H. Assemble open drain fittings and install with top of hub 2 inches above floor.

I. Install deep-seal traps on floor drains and other waste outlets, if indicated.

J. Install floor-drain, trap-seal primer fittings on inlet to floor drains that require trap-seal primer connection.

1. Exception: Fitting may be omitted if trap has trap-seal primer connection.
2. Size: Same as floor drain inlet.

K. Install air-gap fittings on draining-type backflow preventers and on indirect-waste piping discharge into sanitary drainage system.

L. Install sleeve and sleeve seals with each riser and stack passing through floors with waterproof membrane.

M. Install vent caps on each vent pipe passing through roof.

N. Install frost-resistant vent terminals on each vent pipe passing through roof. Maintain 1-inch (25-mm) clearance between vent pipe and roof substrate.

O. Install expansion joints on vertical stacks and conductors. Position expansion joints for easy access and maintenance.

P. Install frost-proof vent caps on each vent pipe passing through roof. Maintain 1-inch clearance between vent pipe and roof substrate.

Q. Assemble components of FOG disposal systems and install on floor.

1. Install trap, vent, fresh-air inlet, and flow-control fitting according to authorities having jurisdiction.

2. Install shelf fastened to reinforcement in wall construction and adjacent to unit, unless otherwise indicated.
3. Install culture bottle, culture metering pump, timer, and control on shelf. Install tubing between culture bottle, metering pump, and chamber.

R. Install wood-blocking reinforcement for wall-mounting-type specialties.

S. Install traps on plumbing specialty drain outlets. Omit traps on indirect wastes unless trap is indicated.

3.2 CONNECTIONS

A. Comply with requirements in Section 22 1316 "Sanitary Waste and Vent Piping" for piping installation requirements. Drawings indicate general arrangement of piping, fittings, and specialties.

B. Install piping adjacent to equipment to allow service and maintenance.

C. FOG Disposal Systems: Connect inlet and outlet to unit, connect flow-control fitting and fresh-air inlet piping to unit inlet piping, and connect vent piping between trap and media chamber. Connect electrical power.

D. Ground equipment according to Section 26 0526 "Grounding and Bonding for Electrical Systems."

E. Connect wiring according to Section 26 0519 "Low-Voltage Electrical Power Conductors and Cables."

3.3 FLASHING INSTALLATION

A. Comply with requirements in Section 07 6200 "Sheet Metal Flashing and Trim."

B. Fabricate flashing from single piece unless large pans, sumps, or other drainage shapes are required.

C. Install sheet flashing on pipes, sleeves, and specialties passing through or embedded in floors and roofs with waterproof membrane.

1. Pipe Flashing: Sleeve type, matching pipe size, with minimum length of 10 inches, and skirt or flange extending at least 8 inches around pipe.
2. Sleeve Flashing: Flat sheet, with skirt or flange extending at least 8 inches around sleeve.
3. Embedded Specialty Flashing: Flat sheet, with skirt or flange extending at least 8 inches around specialty.

D. Set flashing on floors and roofs in solid coating of bituminous cement.

E. Secure flashing into sleeve and specialty clamping ring or device.

F. Install flashing for piping passing through roofs with counterflashing or commercially made flashing fittings, according to Section 07 6200 "Sheet Metal Flashing and Trim."

G. Extend flashing up vent pipe passing through roofs and turn down into pipe, or secure flashing into cast-iron sleeve having calking recess.

3.4 LABELING AND IDENTIFYING

A. Equipment Nameplates and Signs: Install engraved plastic-laminate equipment nameplate or sign on or near each of the following:

1. FOG disposal systems.

B. Distinguish among multiple units, inform operator of operational requirements, indicate safety and emergency precautions, and warn of hazards and improper operations, in addition to identifying unit.

1. Nameplates and signs are specified in Section 22 0553 "Identification for Plumbing Piping and Equipment."

3.5 FIELD QUALITY CONTROL

A. Perform tests and inspections, and prepare test reports.

1. Manufacturer's Field Service: Engage a factory-authorized service representative to inspect field-assembled FOG disposal systems and their installation, including piping and electrical connections, and to assist in testing.

B. Tests and Inspections:

1. Leak Test: After installation, charge system and test for leaks. Repair leaks and retest until no leaks exist.
2. Test and adjust controls and safeties. Replace damaged and malfunctioning controls and equipment.

3.6 PROTECTION

A. Protect drains during remainder of construction period to avoid clogging with dirt or debris and to prevent damage from traffic or construction work.

B. Place plugs in ends of uncompleted piping at end of each day or when work stops.

3.7 DEMONSTRATION

A. Engage a factory-authorized service representative to train Owner's maintenance personnel to adjust, operate, and maintain FOG disposal systems. Refer to Section 01 7900 "Demonstration and Training."

END OF SECTION

SECTION 22 1413

FACILITY STORM DRAINAGE PIPING

PART 1 - GENERAL

1.1 RELATED DOCUMENTS

A. Drawings and general provisions of the Contract, including General and Supplementary Conditions and Division 01 Specification Sections, apply to this Section.

1.2 SUMMARY

A. Section Includes:

1. Pipe, tube, and fittings.
2. Specialty pipe fittings.
3. Encasement for underground metal piping.

B. Related Sections:

1. Section 22 1429 "Sump Pumps" for storm drainage pumps.
2. Section 33 4100 "Storm Utility Drainage Piping" for storm drainage piping outside the building.

1.3 PERFORMANCE REQUIREMENTS

A. Components and installation shall be capable of withstanding the following minimum working pressure unless otherwise indicated:

1. Storm Drainage Piping: 10-foot head of water.
2. Storm Drainage, Force-Main Piping: 100 psig.

B. Seismic Performance: Storm drainage piping and support and installation shall withstand the effects of earthquake motions determined according to ASCE/SEI 7.

1.4 ACTION SUBMITTALS

A. Product Data: For each type of product indicated.

B. Shop Drawings: For controlled-flow or siphonic roof drainage system. Include calculations, plans, and details.

1.5 INFORMATIONAL SUBMITTALS

A. Seismic Qualification Certificates: For storm drainage piping, accessories, and components, from manufacturer.

1. Basis for Certification: Indicate whether withstand certification is based on actual test of assembled components or on calculation.
2. Detailed description of equipment anchorage devices on which the certification is based and their installation requirements.

B. Field quality-control reports.

1.6 QUALITY ASSURANCE

A. Piping materials shall bear label, stamp, or other markings of specified testing agency.

B. Comply with NSF/ANSI 14, "Plastics Piping System Components and Related Materials," for plastic piping components. Include marking with "NSF-drain" for plastic drain piping and "NSF-sewer" for plastic sewer piping.

1.7 PROJECT CONDITIONS

A. Interruption of Existing Storm-Drainage Service: Do not interrupt service to facilities occupied by Owner or others unless permitted under the following conditions and then only after arranging to provide temporary service according to requirements indicated:

1. Notify Owner' Representative no fewer than five days in advance of proposed interruption of storm-drainage service.
2. Do not proceed with interruption of storm-drainage service without Owner Representative's written permission.

PART 2 - PRODUCTS

2.1 PIPING MATERIALS

A. The product descriptions listed in the section may not all be used on this project. Refer to the Piping Material Schedules on the drawings for the specific application for each product or material. Products not shown on the schedule for the specific application may not be substituted without pre-approval from the Engineer. Where there is a conflict between the drawing schedule and specifications, the drawing schedule shall take precedent.

2.2 HUB-AND-SPIGOT, CAST-IRON SOIL PIPE AND FITTINGS

A. Pipe and Fittings: ASTM A 74, Service and Extra Heavy classes.

B. Gaskets: ASTM C 564, rubber.

C. Calking Materials: ASTM B 29, pure lead and oakum or hemp fiber.

2.3 HUBLESS, CAST-IRON SOIL PIPE AND FITTINGS

A. Pipe and Fittings: ASTM A 888 or CISPI 301.

B. CISPI, Hubless-Piping Couplings:

1. Standards: ASTM C 1277 and CISPI 310.
2. Description: Stainless-steel corrugated shield with stainless-steel bands and tightening devices; and ASTM C 564, rubber sleeve with integral, center pipe stop.

C. Heavy-Duty, Hubless-Piping Couplings:
1. Standards: ASTM C 1277 and ASTM C 1540.
2. Description: Stainless-steel shield with stainless-steel bands and tightening devices; and ASTM C 564, rubber sleeve with integral, center pipe stop.

D. Cast-Iron, Hubless-Piping Couplings:
1. Standard: ASTM C 1277.
2. Description: Two-piece ASTM A 48/A 48M, cast-iron housing; stainless-steel bolts and nuts; and ASTM C 564, rubber sleeve with integral, center pipe stop.

2.4 GALVANIZED-STEEL PIPE AND FITTINGS

A. Galvanized-Steel Pipe: ASTM A 53/A 53M, Type E, Standard Weight. Include square-cut-grooved or threaded ends matching joining method.

B. Galvanized-Cast-Iron Drainage Fittings: ASME B16.12 threaded.

C. Steel-Pipe Pressure Fittings:

1. Galvanized-Steel Pipe Nipples: ASTM A 733, made of ASTM A 53/A 53M or ASTM A 106/A 106M, Schedule 40, seamless steel pipe. Include ends matching joining method.
2. Malleable-Iron Unions: ASME B16.39; Class 150; hexagonal-stock body with ball-and-socket, metal-to-metal, bronze seating surface; and female threaded ends.
3. Gray-Iron, Threaded Fittings: ASME B16.4, Class 125, standard pattern.

D. Cast-Iron Flanges: ASME B16.1, Class 125.

1. Flange Gasket Materials: ASME B16.21, full-face, flat, nonmetallic, asbestos-free, 1/8-inch maximum thickness unless thickness or specific material is indicated.
2. Flange Bolts and Nuts: ASME B18.2.1, carbon steel unless otherwise indicated.

E. Grooved-Joint, Galvanized-Steel-Pipe Appurtenances:
1. Galvanized, Grooved-End Fittings for Galvanized-Steel Piping: ASTM A 536 ductile-iron castings, ASTM A 47/A 47M malleable-iron castings, ASTM A 234/A 234M forged-steel fittings, or ASTM A 106/A 106M steel pipes with dimensions matching ASTM A 53/A 53M steel pipe, and complying with AWWA C606 for grooved ends.
2. Grooved Mechanical Couplings for Galvanized-Steel Piping: ASTM F 1476, Type I. Include ferrous housing sections with continuous curved keys; EPDM-rubber gasket suitable for hot and cold water; and bolts and nuts.

2.5 DUCTILE-IRON PIPE AND FITTINGS

A. Ductile-Iron, Mechanical-Joint Piping:

1. Ductile-Iron Pipe: AWWA C151/A21.51, with mechanical-joint bell and plain spigot end unless grooved or flanged ends are indicated.
2. Ductile-Iron Fittings: AWWA C110/A21.10, mechanical-joint ductile- or gray-iron standard pattern or AWWA C153/A21.53, ductile-iron compact pattern.

3. Glands, Gaskets, and Bolts: AWWA C111/A21.11, ductile- or gray-iron glands, rubber gaskets, and steel bolts.

B. Ductile-Iron, Push-On-Joint Piping:

1. Ductile-Iron Pipe: AWWA C151/A21.51, with push-on-joint bell and plain spigot end unless grooved or flanged ends are indicated.
2. Ductile-Iron Fittings: AWWA C110/A21.10, push-on-joint ductile- or gray-iron standard pattern or AWWA C153/A21.53, ductile-iron compact pattern.
3. Gaskets: AWWA C111/A21.11, rubber.

C. Ductile-Iron, Grooved-Joint Piping:

1. Ductile-Iron Pipe: AWWA C151/A21.51 with round-cut-grooved ends according to AWWA C606.
2. Ductile-Iron-Pipe Appurtenances:
   a. Grooved-End, Ductile-Iron Fittings: ASTM A 536 ductile-iron castings with dimensions matching AWWA C110/A21.10 ductile-iron pipe or AWWA C153/A21.53 ductile-iron fittings and complying with AWWA C606 for grooved ends.
   b. Grooved Mechanical Couplings for Ductile-Iron Pipe: ASTM F 1476, Type I. Include ferrous housing sections with continuous curved keys; EPDM-rubber center-leg gasket suitable for hot and cold water; and bolts and nuts.

2.6 COPPER TUBE AND FITTINGS

A. Copper DWV Tube: ASTM B 306, drainage tube, drawn temper.

B. Copper Drainage Fittings: ASME B16.23, cast-copper fittings or ASME B16.29, wrought-copper, solder-joint fittings.

C. Hard Copper Tube: ASTM B 88, Type L water tube, drawn temper.

D. Soft Copper Tube: ASTM B 88, Type L, water tube, annealed temper.

E. Copper Pressure Fittings:

1. Copper Fittings: ASME B16.18, cast-copper-alloy fittings or ASME B16.22, wrought-copper, solder-joint fittings. Furnish wrought-copper fittings if indicated.
2. Copper Unions: MSS SP-123, copper-alloy, hexagonal-stock body with ball-and-socket, metal-to-metal seating surfaces, and solder-joint or threaded ends.

F. Copper Flanges: ASME B16.24, Class 150, cast copper with solder-joint end.

1. Flange Gasket Materials: ASME B16.21, full-face, flat, nonmetallic, asbestos-free, 1/8-inch maximum thickness unless thickness or specific material is indicated.
2. Flange Bolts and Nuts: ASME B18.2.1, carbon steel unless otherwise indicated.

G. Solder: ASTM B 32, lead free with ASTM B 813, water-flushable flux.

2.7 ABS PIPE AND FITTINGS

A. Solid-Wall ABS Pipe: ASTM D 2661, Schedule 40.

B. Cellular-Core ABS Pipe: ASTM F 628, Schedule 40.

C. ABS Socket Fittings: ASTM D 2661, made to ASTM D 3311, drain, waste, and vent patterns.

D. Solvent Cement: ASTM D 2235.

2.8 PVC PIPE AND FITTINGS

A. Solid-Wall PVC Pipe: ASTM D 2665, drain, waste, and vent.

B. Cellular-Core PVC Pipe: ASTM F 891, Schedule 40.

C. PVC Socket Fittings: ASTM D 2665, made to ASTM D 3311, drain, waste, and vent patterns and to fit Schedule 40 pipe.

D. Adhesive Primer: ASTM F 656.

E. Solvent Cement: ASTM D 2564.

2.9 SPECIALTY PIPE FITTINGS

A. Transition Couplings:

1. General Requirements: Fitting or device for joining piping with small differences in ODs or of different materials. Include end connections same size as and compatible with pipes to be joined.
2. Fitting-Type Transition Couplings: Manufactured piping coupling or specified-piping-system fitting.
3. Unshielded, Nonpressure Transition Couplings:
    a. Standard: ASTM C 1173.
    b. Description: Elastomeric, sleeve-type, reducing or transition pattern. Include shear ring and corrosion-resistant-metal tension band and tightening mechanism on each end.
    c. Sleeve Materials:

        1) For Cast-Iron Soil Pipes: ASTM C 564, rubber.
        2) For Plastic Pipes: ASTM F 477, elastomeric seal or ASTM D 5926, PVC.
        3) For Dissimilar Pipes: ASTM D 5926, PVC or other material compatible with pipe materials being joined.

4. Shielded, Nonpressure Transition Couplings:
    a. Standard: ASTM C 1460.
    b. Description: Elastomeric or rubber sleeve with full-length, corrosion-resistant outer shield and corrosion-resistant-metal tension band and tightening mechanism on each end.

5. Pressure Transition Couplings:
    a. Standard: AWWA C219.
    b. Description: Metal, sleeve-type couplings same size as, with pressure rating at least equal to and ends compatible with, pipes to be joined.
    c. Center-Sleeve Material: To match pipe type.
    d. Gasket Material: Natural or synthetic rubber.
    e. Metal Component Finish: Corrosion-resistant coating or material.

B. Dielectric Fittings:

1. General Requirements: Assembly of copper alloy and ferrous materials with separating nonconductive insulating material. Include end connections compatible with pipes to be joined.
2. Dielectric Unions:
   a. Description:

      1) Standard: ASSE 1079.
      2) Pressure Rating: 150 psig at 180 deg F (82 deg C).
      3) End Connections: Solder-joint copper alloy and threaded ferrous.

3. Dielectric Flanges:

   a.
   b. Description:

      1) Standard: ASSE 1079.
      2) Factory-fabricated, bolted, companion-flange assembly.
      3) Pressure Rating: 150 psig.
      4) End Connections: Solder-joint copper alloy and threaded ferrous; threaded solder-joint copper alloy and threaded ferrous.

4. Dielectric-Flange Insulating Kits:
   a. Description:

      1) Nonconducting materials for field assembly of companion flanges.
      2) Pressure Rating: 150 psig.
      3) Gasket: Neoprene or phenolic.
      4) Bolt Sleeves: Phenolic or polyethylene.
      5) Washers: Phenolic with steel-backing washers.

5. Dielectric Nipples:

   a. Description:

      1) Electroplated steel nipple complying with ASTM F 1545.
      2) Pressure Rating: 300 psig.
      3) End Connections: Male threaded or grooved.
      4) Lining: Inert and noncorrosive, propylene.

2.10 ENCASEMENT FOR UNDERGROUND METAL PIPING

A. Standard: ASTM A 674 or AWWA C105.

B. Material: High-density, crosslaminated PE film of 0.004-inch or LLDPE film of 0.008-inch minimum thickness.

C. Form: Sheet or tube.

D. Color: Black.

PART 3 - EXECUTION

3.1 EARTH MOVING

A. Comply with requirements for excavating, trenching, and backfilling specified in Section 31 2000 "Earth Moving."

3.2 PIPING INSTALLATION

A. Drawing plans, schematics, and diagrams indicate general location and arrangement of piping systems. Indicated locations and arrangements were used to size pipe and calculate friction loss, expansion, pump sizing, and other design considerations. Install piping as indicated unless deviations from layout are approved on coordination drawings.

B. Install piping in concealed locations unless otherwise indicated and except in equipment rooms and service areas.

C. Install piping indicated to be exposed and piping in equipment rooms and service areas at right angles or parallel to building walls. Diagonal runs are prohibited unless specifically indicated otherwise.

D. Install piping above accessible ceilings to allow sufficient space for ceiling panel removal.

E. Install piping to permit valve servicing.

F. Install piping at indicated slopes.

G. Install piping free of sags and bends.

H. Install fittings for changes in direction and branch connections.

I. Install piping to allow application of insulation.

J. Install seismic restraints on piping. Comply with requirements for seismic-restraint devices specified in Section 22 0548 "Vibration and Seismic Controls for Plumbing Piping and Equipment."

K. Make changes in direction for storm drainage piping using appropriate branches, bends, and long-sweep bends. Do not change direction of flow more than 90 degrees. Use proper size of standard increasers and reducers if pipes of different sizes are connected. Reducing size of drainage piping in direction of flow is prohibited.

L. Lay buried building storm drainage piping beginning at low point of each system. Install true to grades and alignment indicated, with unbroken continuity of invert. Place hub ends of piping upstream. Install required gaskets according to manufacturer's written instructions for use of lubricants, cements, and other installation requirements. Maintain swab in piping and pull past each joint as completed.

M. Install storm drainage piping at the following minimum slopes unless otherwise indicated:

1. Building Storm Drain: 2 percent downward in direction of flow for piping NPS 3 and smaller; 2 percent downward in direction of flow for piping NPS 4 and larger.
2. Horizontal Storm-Drainage Piping: 2 percent downward in direction of flow.

N. Install cast-iron soil piping according to CISPI's "Cast Iron Soil Pipe and Fittings Handbook," Chapter IV, "Installation of Cast Iron Soil Pipe and Fittings."

1. Install encasement on underground piping according to ASTM A 674 or AWWA C105.

O. Install steel piping according to applicable plumbing code.

P. Install aboveground copper tubing according to CDA's "Copper Tube Handbook."

Q. Install aboveground ABS piping according to ASTM D 2661.

R. Install aboveground PVC piping according to ASTM D 2665.

S. Install underground ABS and PVC piping according to ASTM D 2321.

T. Install engineered controlled-flow and siphonic drain specialties and storm drainage piping in locations indicated.

U. Install underground, ductile-iron, force-main piping according to AWWA C600. Install buried piping inside building between wall and floor penetrations and connection to storm sewer piping outside building with restrained joints. Anchor pipe to wall or floor. Install thrust-block supports at vertical and horizontal offsets.

1. Install encasement on piping according to ASTM A 674 or AWWA C105.

V. Install underground, copper, force-main tubing according to CDA's "Copper Tube Handbook."

1. Install encasement on piping according to ASTM A 674 or AWWA C105.

W. Install force mains at elevations indicated.

X. Plumbing Specialties:

1. Install backwater valves in storm drainage gravity-flow piping. Comply with requirements for backwater valves specified in Section 22 1423 "Storm Drainage Piping Specialties."
2. Install cleanouts at grade and extend to where building storm drains connect to building storm sewers in storm drainage gravity-flow piping. Install cleanout fitting with closure plug inside the building in storm drainage force-main piping. Comply with requirements for cleanouts specified in Section 22 1423 "Storm Drainage Piping Specialties."
3. Install drains in storm drainage gravity-flow piping. Comply with requirements for drains specified in Section 22 1423 "Storm Drainage Piping Specialties."

Y. Do not enclose, cover, or put piping into operation until it is inspected and approved by authorities having jurisdiction.

Z. Install sleeves for piping penetrations of walls, ceilings, and floors. Comply with requirements for sleeves specified in Section 22 0517 "Sleeves and Sleeve Seals for Plumbing Piping."

AA. Install sleeve seals for piping penetrations of concrete walls and slabs. Comply with requirements for sleeve seals specified in Section 22 0517 "Sleeves and Sleeve Seals for Plumbing Piping."

BB. Install escutcheons for piping penetrations of walls, ceilings, and floors. Comply with requirements for escutcheons specified in Section 22 0518 "Escutcheons for Plumbing Piping."

3.3 JOINT CONSTRUCTION

A. Hub-and-Spigot, Cast-Iron Soil Piping Gasketed Joints: Join according to CISPI's "Cast Iron Soil Pipe and Fittings Handbook" for compression joints.

B. Hub-and-Spigot, Cast-Iron Soil Piping Calked Joints: Join according to CISPI's "Cast Iron Soil Pipe and Fittings Handbook" for lead-and-oakum calked joints.

C. Hubless, Cast-Iron Soil Piping Coupled Joints: Join according to CISPI 310 and CISPI's "Cast Iron Soil Pipe and Fittings Handbook" for hubless-piping coupling joints.

D. Threaded Joints: Thread pipe with tapered pipe threads according to ASME B1.20.1. Cut threads full and clean using sharp dies. Ream threaded pipe ends to remove burrs and restore full ID. Join pipe fittings and valves as follows:

1. Apply appropriate tape or thread compound to external pipe threads unless dry seal threading is specified.
2. Damaged Threads: Do not use pipe or pipe fittings with threads that are corroded or damaged. Do not use pipe sections that have cracked or open welds.

E. Join copper tube and fittings with soldered joints according to ASTM B 828 procedure. Use ASTM B 813, water-flushable, lead-free flux and ASTM B 32, lead-free-alloy solder.

F. Grooved Joints: Cut groove ends of pipe according to AWWA C606. Lubricate and install gasket over ends of pipes or pipe and fittings. Install coupling housing sections, over gasket, with keys seated in piping grooves. Install and tighten housing bolts.

G. Flanged Joints: Align bolt holes. Select appropriate gasket material, size, type, and thickness. Install gasket concentrically positioned. Use suitable lubricants on bolt threads. Torque bolts in cross pattern.

H. Plastic, Nonpressure-Piping, Solvent-Cemented Joints: Clean and dry joining surfaces. Join pipe and fittings according to the following:

1. Comply with ASTM F 402 for safe-handling practice of cleaners, primers, and solvent cements.
2. ABS Piping: Join according to ASTM D 2235 and ASTM D 2661 Appendices.
3. PVC Piping: Join according to ASTM D 2855 and ASTM D 2665 Appendices.

3.4 SPECIALTY PIPE FITTING INSTALLATION

A. Transition Couplings:

1. Install transition couplings at joints of piping with small differences in ODs.
2. In Drainage Piping: Shielded, nonpressure transition couplings.
3. In Aboveground Force-Main Piping: Fitting-type transition couplings.
4. In Underground Force-Main Piping:

    a. NPS 1-1/2 and Smaller: Fitting-type transition couplings.
    b. NPS 2 and Larger: Pressure transition couplings.

B. Dielectric Fittings:

1. Install dielectric fittings in piping at connections of dissimilar metal piping and tubing.

2. Dielectric Fittings for NPS 2 and Smaller: Use dielectric unions.
3. Dielectric Fittings for NPS 2-1/2 to NPS 4: Use dielectric flanges or flange kits.
4. Dielectric Fittings for NPS 5 and Larger: Use dielectric flange kits.

3.5 VALVE INSTALLATION

A. General valve installation requirements are specified in Section 22 0523.12 "Ball Valves for Plumbing Piping," Section 22 0523.14 "Check Valves for Plumbing Piping," and Section 22 0523.15 "Gate Valves for Plumbing Piping."

B. Shutoff Valves: Install shutoff valve on each sump pump discharge.

1. Install gate or full-port ball valve for piping NPS 2 and smaller.
2. Install gate valve for piping NPS 2-1/2 and larger.

C. Check Valves: Install swing-check valve, between pump and shutoff valve, on each sump pump discharge.

D. Backwater Valves: Install backwater valves in piping subject to backflow.

1. Horizontal Piping: Horizontal backwater valves. Use normally closed type unless otherwise indicated.
2. Install backwater valves in accessible locations.
3. Comply with requirements for backwater valves specified in Section 22 1423 "Storm Drainage Piping Specialties."

3.6 HANGER AND SUPPORT INSTALLATION

A. Comply with requirements for seismic-restraint devices specified in Section 22 0548 "Vibration and Seismic Controls for Plumbing Piping and Equipment."

B. Comply with requirements for pipe hanger and support devices and installation specified in Section 22 0529 "Hangers and Supports for Plumbing Piping and Equipment."

1. Install carbon-steel pipe hangers for horizontal piping in noncorrosive environments.
2. Install stainless-steel pipe hangers for horizontal piping in corrosive environments.
3. Install carbon-steel pipe support clamps for vertical piping in noncorrosive environments.
4. Install stainless-steel pipe support clamps for vertical piping in corrosive environments.
5. Vertical Piping: MSS Type 8 or Type 42, clamps.
6. Individual, Straight, Horizontal Piping Runs:

    a. 100 Feet and Less: MSS Type 1, adjustable, steel clevis hangers.
    b. Longer Than 100 Feet MSS Type 43, adjustable roller hangers.
    c. Longer Than 100 Feet if Indicated: MSS Type 49, spring cushion rolls.

7. Multiple, Straight, Horizontal Piping Runs 100 Feet or Longer: MSS Type 44, pipe rolls. Support pipe rolls on trapeze.
8. Base of Vertical Piping: MSS Type 52, spring hangers.

C. Support horizontal piping and tubing within 12 inches of each fitting, valve, and coupling.

D. Support vertical piping and tubing at base and at each floor.

E. Rod diameter may be reduced one size for double-rod hangers, with 3/8-inch minimum rods.

F. Install hangers for cast-iron soil piping with the following maximum horizontal spacing and minimum rod diameters:

1. NPS 1-1/2 and NPS 2: 60 inches with 3/8-inch rod.
2. NPS 3: 60 inches with 1/2-inch rod.
3. NPS 4 and NPS 5: 60 inches with 5/8-inch rod.
4. NPS 6 and NPS 8: 60 inches with 3/4-inch rod.
5. NPS 10 and NPS 12: 60 inches with 7/8-inch rod.
6. Spacing for 10-foot pipe lengths may be increased to 10 feet. Spacing for fittings is limited to 60 inches.

G. Install supports for vertical cast-iron soil piping every 15 feet.

H. Install hangers for steel piping with the following maximum horizontal spacing and minimum rod diameters:

1. NPS 1-1/4: 84 inches with 3/8-inch rod.
2. NPS 1-1/2: 108 inches with 3/8-inch rod.
3. NPS 2: 10 feet with 3/8-inch rod.
4. NPS 2-1/2: 11 feet with 1/2-inch rod.
5. NPS 3: 12 feet with 1/2-inch rod.
6. NPS 4 and NPS 5: 12 feet with 5/8-inch rod.
7. NPS 6 and NPS 8: 12 feet with 3/4-inch rod.
8. NPS 10 and NPS 12: 12 feet with 7/8-inch rod.

I. Install supports for vertical steel piping every 15 feet.

J. Install hangers for copper tubing with the following maximum horizontal spacing and minimum rod diameters:

1. NPS 1-1/4: 72 inches with 3/8-inch rod.
2. NPS 1-1/2 and NPS 2: 96 inches with 3/8-inch rod.
3. NPS 2-1/2: 108 inches with 1/2-inch rod.
4. NPS 3 to NPS 5: 10 feet with 1/2-inch rod.
5. NPS 6: 10 feet with 5/8-inch rod.
6. NPS 8: 10 feet with 3/4-inch rod.

K. Install supports for vertical copper tubing every 10 feet.

L. Install hangers for ABS and PVC piping with the following maximum horizontal spacing and minimum rod diameters:

1. NPS 1-1/2 and NPS 2: 48 inches with 3/8-inch rod.
2. NPS 3: 48 inches with 1/2-inch rod.
3. NPS 4 and NPS 5: 48 inches with 5/8-inch rod.
4. NPS 6 and NPS 8: 48 inches with 3/4-inch rod.
5. NPS 10 and NPS 12: 48 inches with 7/8-inch rod.

M. Install supports for vertical ABS and PVC piping every 48 inches.

N. Support piping and tubing not listed above according to MSS SP-69 and manufacturer's written instructions.

3.7 CONNECTIONS

A. Drawings indicate general arrangement of piping, fittings, and specialties.

B. Connect interior storm drainage piping to exterior storm drainage piping. Use transition fitting to join dissimilar piping materials.

C. Connect storm drainage piping to roof drains and storm drainage specialties.

1. Install test tees (wall cleanouts) in conductors near floor, and floor cleanouts with cover flush with floor.
2. Install horizontal backwater valves with cleanout cover flush with floor or in pit with pit cover flush with floor.
3. Comply with requirements for backwater valves, cleanouts, and drains specified in Section 22 1423 "Storm Drainage Piping Specialties."

D. Connect force-main piping to the following:

1. Storm Sewer: To exterior force main.
2. Sump Pumps: To sump pump discharge.

E. Where installing piping adjacent to equipment, allow space for service and maintenance of equipment.

F. Make connections according to the following unless otherwise indicated:

1. Install unions, in piping NPS 2 and smaller, adjacent to each valve and at final connection to each piece of equipment.
2. Install flanges, in piping NPS 2-1/2 and larger, adjacent to flanged valves and at final connection to each piece of equipment.

3.8 IDENTIFICATION

A. Identify exposed storm drainage piping. Comply with requirements for identification specified in Section 22 0553 "Identification for Plumbing Piping and Equipment."

3.9 FIELD QUALITY CONTROL

A. During installation, notify authorities having jurisdiction at least 24 hours before inspection must be made. Perform tests specified below in presence of authorities having jurisdiction.

1. Roughing-in Inspection: Arrange for inspection of piping before concealing or closing-in after roughing-in.
2. Final Inspection: Arrange for final inspection by authorities having jurisdiction to observe tests specified below and to ensure compliance with requirements.

B. Reinspection: If authorities having jurisdiction find that piping will not pass test or inspection, make required corrections and arrange for reinspection.

C. Reports: Prepare inspection reports and have them signed by authorities having jurisdiction.

D. Test storm drainage piping according to procedures of authorities having jurisdiction or, in absence of published procedures, as follows:

1. Test for leaks and defects in new piping and parts of existing piping that have been altered, extended, or repaired. If testing is performed in segments, submit separate report for each test, complete with diagram of portion of piping tested.
2. Leave uncovered and unconcealed new, altered, extended, or replaced storm drainage piping until it has been tested and approved. Expose work that was covered or concealed before it was tested.
3. Test Procedure: Test storm drainage piping, except outside leaders, on completion of roughing-in. Close openings in piping system and fill with water to point of overflow, but not less than 10-foot head of water. From 15 minutes before inspection starts until completion of inspection, water level must not drop. Inspect joints for leaks.
4. Repair leaks and defects with new materials and retest piping, or portion thereof, until satisfactory results are obtained.
5. Prepare reports for tests and required corrective action.

E. Test force-main piping according to procedures of authorities having jurisdiction or, in absence of published procedures, as follows:

1. Leave uncovered and unconcealed new, altered, extended, or replaced force-main piping until it has been tested and approved. Expose work that was covered or concealed before it was tested.
2. Cap and subject piping to static-water pressure of 50 psig above operating pressure, without exceeding pressure rating of piping system materials. Isolate test source and allow to stand for four hours. Leaks and loss in test pressure constitute defects that must be repaired.
3. Repair leaks and defects with new materials and retest piping, or portion thereof, until satisfactory results are obtained.
4. Prepare reports for tests and required corrective action.

3.10 CLEANING

A. Clean interior of piping. Remove dirt and debris as work progresses.

B. Protect drains during remainder of construction period to avoid clogging with dirt and debris and to prevent damage from traffic and construction work.

C. Place plugs in ends of uncompleted piping at end of day and when work stops.

END OF SECTION

SECTION 22 1423

STORM DRAINAGE PIPING SPECIALTIES

PART 1 - GENERAL

1.1 RELATED DOCUMENTS

A. Drawings and general provisions of the Contract, including General and Supplementary Conditions and Division 01 Specification Sections, apply to this Section.

1.2 SUMMARY

A. Section Includes:

1. Roof drains.
2. Miscellaneous storm drainage piping specialties.
3. Cleanouts.
4. Backwater valves.
5. Trench drains.
6. Channel drainage systems.
7. Through-penetration firestop assemblies.
8. Flashing materials.

1.3 ACTION SUBMITTALS

A. Product Data: For each type of product indicated.

1.4 QUALITY ASSURANCE

A. Drainage piping specialties shall bear label, stamp, or other markings of specified testing agency.

PART 2 - PRODUCTS

PART 3 - See "Writing Guide" Article in the Evaluations for a discussion of this Section's organization and the most efficient way to revise this Section.

3.1 The product descriptions listed in the section may not all be used on this project. Refer to the Equipment Schedules on the drawings for the specific application for each product or material. Products not shown on the schedule for the specific application may not be substituted without pre-approval from the Engineer. Where there is a conflict between the drawing schedules and specifications, the drawing schedules shall take precedent.

3.2 MISCELLANEOUS STORM DRAINAGE PIPING SPECIALTIES

A. Downspout Adaptors:

1. Description: Manufactured, gray-iron casting, for attaching to horizontal-outlet, parapet roof drain and to exterior, sheet metal downspout.
2. Size: Inlet size to match parapet drain outlet.

B. Downspout Boots:

1. Description: Manufactured, ASTM A 48/A 48M, gray-iron casting, with strap or ears for attaching to building; NPS 4 outlet; and shop-applied bituminous coating.
2. Size: Inlet size to match downspout and NPS 4 outlet.

C. Conductor Nozzles:

1. Description: Bronze body with threaded inlet and bronze wall flange with mounting holes.
2. Size: Same as connected conductor.

D. Test Tees:

1. Standard: ASME A112.36.2M and ASTM A 74, ASTM A 888, or CISPI 301, for cleanout test tees.
2. Size: Same as connected drainage piping.
3. Body Material: Hub-and-spigot, cast-iron soil-pipe T-branch or hubless, cast-iron soil-pipe test tee as required to match connected piping.
4. Closure Plug: Countersunk or raised head, brass.
5. Closure Plug Size: Same as or not more than one size smaller than cleanout size.

3.3 BACKWATER VALVES

A. Cast-Iron, Horizontal Backwater Valves:

1. Standard: ASME A112.14.1, for backwater valves.
2. Size: Same as connected piping.
3. Body Material: Cast iron.
4. Cover: Cast iron with bolted or threaded access check valve.
5. End Connections: Match pipe type.
6. Check Valve: Removable, bronze, swing check, factory assembled or field modified to hang open for airflow unless subject to backflow condition.

7. Extension: ASTM A 74, Service class; full-size, cast-iron soil-pipe extension to field-installed cleanout at floor; replaces backwater valve cover.

B. Cast-Iron, Drain-Outlet Backwater Valves:
1. Size: Same as floor drain outlet.
2. Body Material: Cast iron or bronze made for vertical installation in bottom outlet of floor drain.
3. Check Valve: Removable ball float.
4. Inlet: Threaded.
5. Outlet: Threaded or spigot.

C. Plastic, Horizontal Backwater Valves:
1. Standard: ASME A112.14.1, for backwater valves.
2. Size: Same as connected piping.
3. Body Material: ABS or PVC.
4. Cover: Same material as body with threaded access to check valve.
5. Check Valve: Removable swing check.
6. End Connections: Socket type.

3.4 THROUGH-PENETRATION FIRESTOP ASSEMBLIES

A. Through-Penetration Firestop Assemblies:
1. Standard: ASTM E 814, for through-penetration firestop assemblies.
2. Certification and Listing: Intertek Testing Service NA for through-penetration firestop assemblies.
3. Size: Same as connected pipe.
4. Sleeve: Molded PVC plastic, of length to match slab thickness and with integral nailing flange on one end for installation in cast-in-place concrete slabs.
5. Stack Fitting: ASTM A 48/A 48M, gray-iron, hubless-pattern, wye branch with neoprene O-ring at base and gray-iron plug in thermal-release harness. Include PVC protective cap for plug.
6. Special Coating: Corrosion resistant on interior of fittings.

3.5 FLASHING MATERIALS

A. Copper Sheet: ASTM B 152/B 152M,12 oz./sq. ft.

B. Zinc-Coated Steel Sheet: ASTM A 653/A 653M, with 0.20 percent copper content and 0.04-inch minimum thickness unless otherwise indicated. Include G90 hot-dip galvanized, mill-phosphatized finish for painting if indicated.

C. Elastic Membrane Sheet: ASTM D 4068, flexible, chlorinated polyethylene, 40-mil minimum thickness.

D. Fasteners: Metal compatible with material and substrate being fastened.

E. Metal Accessories: Sheet metal strips, clamps, anchoring devices, and similar accessory units required for installation; matching or compatible with material being installed.

F. Solder: ASTM B 32, lead-free alloy.

PART 4 - EXECUTION

4.1 INSTALLATION

A. Install roof drains at low points of roof areas according to roof membrane manufacturer's written installation instructions.

1. Install flashing collar or flange of roof drain to prevent leakage between drain and adjoining roofing. Maintain integrity of waterproof membranes where penetrated.
2. Install expansion joints, if indicated, in roof drain outlets.
3. Position roof drains for easy access and maintenance.

B. Install downspout adapters on outlet of back-outlet parapet roof drains and connect to sheet metal downspouts.

C. Install downspout boots at grade with top 12 inches above grade. Secure to building wall.

D. Install conductor nozzles at exposed bottom of conductors where they spill onto grade.

E. Install cleanouts in aboveground piping and building drain piping according to the following instructions unless otherwise indicated:

1. Use cleanouts the same size as drainage piping up to NPS 4. Use NPS 4 for larger drainage piping unless larger cleanout is indicated.
2. Locate cleanouts at each change in direction of piping greater than 45 degrees.
3. Locate cleanouts at minimum intervals of 50 feet for piping NPS 4 and smaller and 100 feet for larger piping.
4. Locate cleanouts at base of each vertical soil and waste stack.

F. For floor cleanouts for piping below floors, install cleanout deck plates with top flush with finished floor.

G. For cleanouts located in concealed piping, install cleanout wall access covers, of types indicated, with frame and cover flush with finished wall.

H. Install horizontal backwater valves in floor with cover flush with floor.

I. Install drain-outlet backwater valves in outlet of drains.

J. Install test tees in vertical conductors and near floor.

K. Install wall cleanouts in vertical conductors. Install access door in wall if indicated.

L. Install trench drains at low points of surface areas to be drained. Set grates of drains flush with finished surface unless otherwise indicated.

M. Assemble channel drainage system components according to manufacturer's written instructions. Install on support devices so that top will be flush with adjacent surface.

N. Install through-penetration firestop assemblies in plastic conductors at concrete floor penetrations.

O. Install sleeve flashing device with each conductor passing through floors with waterproof membrane.

4.2 CONNECTIONS

A. Comply with requirements for piping specified in Section 22 1413 "Facility Storm Drainage Piping." Drawings indicate general arrangement of piping, fittings, and specialties.

4.3 FLASHING INSTALLATION

A. Fabricate flashing from single piece of metal unless large pans, sumps, or other drainage shapes are required. Join flashing according to the following if required:

1. Lead Sheets: Burn joints of 6.0-lb/sq. ft. lead sheets, 0.0938-inch thickness or thicker. Solder joints of 4.0-lb/sq. ft. lead sheets, 0.0625-inch thickness or thinner.
2. Copper Sheets: Solder joints of copper sheets.

B. Install sheet flashing on pipes, sleeves, and specialties passing through or embedded in floors and roofs with waterproof membrane.

1. Pipe Flashing: Sleeve type, matching the pipe size, with a minimum length of 10 inches and with skirt or flange extending at least 8 inches around pipe.
2. Sleeve Flashing: Flat sheet, with skirt or flange extending at least 8 inches around sleeve.
3. Embedded Specialty Flashing: Flat sheet, with skirt or flange extending at least 8 inches around specialty.

C. Set flashing on floors and roofs in solid coating of bituminous cement.

D. Secure flashing into sleeve and specialty clamping ring or device.

E. Fabricate and install flashing and pans, sumps, and other drainage shapes.

4.4 PROTECTION

A. Protect drains during remainder of construction period to avoid clogging with dirt or debris and to prevent damage from traffic or construction work.

B. Place plugs in ends of uncompleted piping at end of each day or when work stops.

END OF SECTION

SECTION 22 1429

SUMP PUMPS

PART 1 - GENERAL

1.1 RELATED DOCUMENTS

A. Drawings and general provisions of the Contract, including General and Supplementary Conditions and Division 01 Specification Sections, apply to this Section.

1.2 SUMMARY

A. Section Includes:

1. Submersible sump pumps.
2. Wet-pit-volute sump pumps.
3. Sump-pump basins and basin covers.
4. Packaged drainage-pump units.

B. Related Section:

1. Section 22 "Sanitary Sewerage Pumps" for effluent and sewage pumps.

1.3 ACTION SUBMITTALS

A. Product Data: For each type of product indicated. Include construction details, material descriptions, dimensions of individual components and profiles. Include rated capacities, operating characteristics, electrical characteristics, and furnished specialties and accessories.

B. Wiring Diagrams: For power, signal, and control wiring.

1.4 CLOSEOUT SUBMITTALS

A. Operation and Maintenance Data: For pumps and controls, to include in operation and maintenance manuals.

1.5 QUALITY ASSURANCE

A. Electrical Components, Devices, and Accessories: Listed and labeled as defined in NFPA 70, by a qualified testing agency, and marked for intended location and application.

B. UL Compliance: Comply with UL 778 for motor-operated water pumps.

1.6 DELIVERY, STORAGE, AND HANDLING

A. Retain shipping flange protective covers and protective coatings during storage.

B. Protect bearings and couplings against damage.

C. Comply with pump manufacturer's written rigging instructions for handling.

PART 2 - PRODUCTS

2.1 SUBMERSIBLE SUMP PUMPS

A. Submersible, Fixed-Position, Single-Seal Sump Pumps:

1. Manufacturers: Subject to compliance with requirements, provide products as specified per plan schedules or equal by one of the following:

    a. Bell & Gossett; a Xylem brand.
    b. Grundfos Pumps Corp.
    c. Zoeller Company.

2. Description: Factory-assembled and -tested sump-pump unit.
3. Pump Type: Submersible, end-suction, single-stage, close-coupled, overhung-impeller, centrifugal sump pump as defined in HI 1.1-1.2 and HI 1.3.
4. Pump Casing: Cast iron, with strainer inlet, legs that elevate pump to permit flow into impeller, and vertical discharge for piping connection.
5. Impeller: Statically and dynamically balanced, ASTM A 48/A 48M, Class No. 25 A cast iron ASTM A 532/A 532M, abrasion-resistant cast iron and ASTM B 584, cast bronze, design for clear wastewater handling, and keyed and secured to shaft.
6. Pump and Motor Shaft: Stainless steel, with factory-sealed, grease-lubricated ball bearings.
7. Seal: Mechanical.
8. Motor: Hermetically sealed, capacitor-start type; with built-in overload protection; lifting eye or lug; and three-conductor, waterproof power cable of length required and with grounding plug and cable-sealing assembly for connection at pump.

    a. Motor Housing Fluid: Oil.

9. Controls:

    a. Enclosure: NEMA 250, Type 4X.
    b. Switch Type: Pedestal-mounted float switch with float rods and rod buttons.
    c. Automatic Alternator: Start pumps on successive cycles and start multiple pumps if one cannot handle load.
    d. Float Guides: Pipe or other restraint for floats and rods in basins of depth greater than 60 inches.
    e. High-Water Alarm: Cover-mounted, compression-probe alarm, with electric bell; 120-V ac, with transformer and contacts for remote alarm bell.

10. Controls:

    a. Enclosure: NEMA 250, Type 4X; pedestal-mounted.
    b. Switch Type: Mechanical-float type, in NEMA 250, Type 6 enclosures with mounting rod and electric cables.
    c. Automatic Alternator: Start pumps on successive cycles and start multiple pumps if one cannot handle load.

d. High-Water Alarm: Rod-mounted, NEMA 250, Type 6 enclosure with mechanical-float, mercury-float, or pressure switch matching control and electric bell; 120-V ac, with transformer and contacts for remote alarm bell.

11. Control-Interface Features:

a. Remote Alarm Contacts: For remote alarm interface.
b. Building Automation System Interface: Auxiliary contacts in pump controls for interface to building automation system and capable of providing the following:

1) On-off status of pump.
2) Alarm status.

2.2 SUMP-PUMP BASINS AND BASIN COVERS

A. Basins: Factory-fabricated, watertight, cylindrical, basin sump with top flange and sidewall openings for pipe connections.

1. Material: Polyethylene.
2. Reinforcement: Mounting plates for pumps, fittings, and accessories.
3. Anchor Flange: Same material as or compatible with basin sump, cast in or attached to sump, in location and of size required to anchor basin in concrete slab.

B. Basin Covers: Fabricate metal cover with openings having gaskets, seals, and bushings; for access to pumps, pump shafts, control rods, discharge piping, vent connections, and power cables.

1. Reinforcement: Steel or cast iron, capable of supporting foot traffic for basins installed in foot-traffic areas.

2. Cover Material: Cast iron or steel with bituminous coating.
3. Cover Diameter: not less than outside diameter of basin top flange.
4. Manhole Required in Cover: Yes.

2.3 PACKAGED DRAINAGE-PUMP UNITS

A. Packaged Submersible Drainage-Pump Units:

1. Manufacturers: Subject to compliance with requirements, provide products as specified per plan schedules or equal by one of the following:

a. Bell & Gossett; a Xylem brand.
b. Grundfos Pumps Corp.
c. Zoeller Company.

2. Description: Factory-assembled and -tested, automatic-operation, basin-mounted, sump-pump unit.
3. Pump Type: Submersible, end-suction, single-stage, close-coupled, overhung-impeller centrifugal pump as defined in HI 1.1-1.2 and HI 1.3.
4. Casing: Metal.
5. Impeller: Brass.
6. Pump Seal: Mechanical.
7. Motor: Hermetically sealed, capacitor-start type, with built-in overload protection.

8. Power Cord: Three-conductor, waterproof cable of length required but not less than 72 inches, with grounding plug and cable-sealing assembly for connection at pump.
9. Pump Discharge Piping: Factory or field fabricated, galvanized, ASTM A 53/A 53M, Schedule 40, steel pipe with ASME B16.4, Class 125, gray iron threaded fittings.
10. Control: Motor-mounted float switch.
11. Basin: Plastic.

2.4 MOTORS

A. Comply with NEMA designation, temperature rating, service factor, enclosure type, and efficiency requirements for motors specified in Section 22 "Common Motor Requirements for Plumbing Equipment."

1. Motor Sizes: Minimum size as indicated. If not indicated, large enough so driven load will not require motor to operate in service factor range above 1.0.

B. Motors for submersible pumps shall be hermetically sealed.

PART 3 - EXECUTION

3.1 EARTHWORK

A. Excavation and filling are specified in Section 31 "Earth Moving."

3.2 EXAMINATION

A. Examine roughing-in for plumbing piping to verify actual locations of storm drainage piping connections before sump pump installation.

3.3 INSTALLATION

A. Pump Installation Standards: Comply with HI 1.4 for installation of sump pumps.

3.4 CONNECTIONS

A. Comply with requirements for piping specified in Section 22 "Facility Storm Drainage Piping." Drawings indicate general arrangement of piping, fittings, and specialties.

B. Install piping adjacent to equipment to allow service and maintenance.

3.5 FIELD QUALITY CONTROL

A. Manufacturer's Field Service: Engage a factory-authorized service representative to inspect, test, and adjust components, assemblies, and equipment installations, including connections.

B. Perform tests and inspections.

1. Manufacturer's Field Service: Engage a factory-authorized service representative to inspect components, assemblies, and equipment installations, including connections, and to assist in testing.

C. Tests and Inspections:

1. Perform each visual and mechanical inspection.
2. Leak Test: After installation, charge system and test for leaks. Repair leaks and retest until no leaks exist.
3. Operational Test: After electrical circuitry has been energized, start units to confirm proper motor rotation and unit operation.
4. Test and adjust controls and safeties. Replace damaged and malfunctioning controls and equipment.

D. Pumps and controls will be considered defective if they do not pass tests and inspections.

E. Prepare test and inspection reports.

3.6 STARTUP SERVICE

A. Engage a factory-authorized service representative to perform startup service.

1. Complete installation and startup checks according to manufacturer's written instructions.

3.7 ADJUSTING

A. Adjust pumps to function smoothly, and lubricate as recommended by manufacturer.

B. Adjust control set points.

3.8 DEMONSTRATION

A. Engage a factory-authorized service representative to train Owner's maintenance personnel to adjust, operate, and maintain controls and pumps.

END OF SECTION

SECTION 22 1513

GENERAL-SERVICE COMPRESSED-AIR PIPING

PART 1 - GENERAL

1.1 RELATED DOCUMENTS

A. Drawings and general provisions of the Contract, including General and Supplementary Conditions and Division 01 Specification Sections, apply to this Section.

1.2 SUMMARY

A. This Section includes piping and related specialties for general-service compressed-air systems operating at 200 psig or less.

B. Related Sections include the following:

1. Section 22 1519 "General-Service Packaged Air Compressors and Receivers" for general-service air compressors and accessories.

1.3 DEFINITIONS

A. ABS: Acrylonitrile-butadiene-styrene plastic.

B. CR: Chlorosulfonated polyethylene synthetic rubber.

C. EPDM: Ethylene-propylene-diene terpolymer rubber.

D. HDPE: High-density polyethylene plastic.

E. NBR: Acrylonitrile-butadiene rubber.

F. PE: Polyethylene plastic.

G. PVC: Polyvinyl chloride plastic.

H. High-Pressure Compressed-Air Piping: System of compressed-air piping and specialties operating at pressures between 150 and 200 psig.

I. Low-Pressure Compressed-Air Piping: System of compressed-air piping and specialties operating at pressures of 150 psig or less.

1.4 PERFORMANCE REQUIREMENTS

A. Seismic Performance: Compressed-air piping and support and installation shall withstand effects of seismic events determined according to SEI/ASCE 7, "Minimum Design Loads for Buildings and Other Structures."

1.5 ACTION SUBMITTALS

A. Product Data: For the following:

1. Plastic pipes, fittings, and valves.
2. Dielectric fittings.
3. Flexible pipe connectors.
4. Safety valves.
5. Pressure regulators. Include rated capacities and operating characteristics.
6. Automatic drain valves.
7. Filters. Include rated capacities and operating characteristics.
8. Lubricators. Include rated capacities and operating characteristics.
9. Quick couplings.
10. Hose assemblies.

1.6 INFORMATIONAL SUBMITTALS

A. Brazing and welding certificates.

B. Qualification Data: For Installers.

C. Field quality-control test reports.

1.7 CLOSEOUT SUBMITTALS

A. Operation and Maintenance Data: For general-service compressed-air piping specialties to include in emergency, operation, and maintenance manuals.

1.8 QUALITY ASSURANCE

A. Installer Qualifications:

1. Extruded-Tee Outlet Procedure: Qualify operators according to training provided by T-DRILL Industries Inc., for making branch outlets.
2. Pressure-Seal Joining Procedure for Copper Tubing: Qualify operators according to training provided by Viega; Plumbing and Heating Systems.
3. Pressure-Seal Joining Procedure for Steel Piping. Qualify operators according to training provided by Victaulic Company.

B. Brazing: Qualify processes and operators according to ASME Boiler and Pressure Vessel Code: Section IX, "Welding and Brazing Qualifications," or to AWS B2.2, "Standard for Brazing Procedure and Performance Qualification."

C. Welding: Qualify processes and operators according to ASME Boiler and Pressure Vessel Code: Section IX.

D. ASME Compliance:

1. Comply with ASME B31.1, "Power Piping," for high-pressure compressed-air piping.
2. Comply with ASME B31.9, "Building Services Piping," for low-pressure compressed-air piping.

1.9 PROJECT CONDITIONS

A. Interruption of Existing Compressed-Air Service: Do not interrupt compressed-air service to facilities occupied by Owner or others unless permitted under the following conditions and then only after arranging to provide temporary compressed-air service according to requirements indicated:

1. Notify Architect no fewer than two days in advance of proposed interruption of compressed-air service.
2. Do not proceed with interruption of compressed-air service without Architect's written permission.

PART 2 - PRODUCTS

2.1 PIPES, TUBES, AND FITTINGS

A. Schedule 40, Steel Pipe: ASTM A 53/A 53M, Type E or S, Grade B, black or hot-dip zinc coated with ends threaded according to ASME B1.20.1.

1. Steel Nipples: ASTM A 733, made of ASTM A 53/A 53M or ASTM A 106, Schedule 40, galvanized seamless steel pipe. Include ends matching joining method.
2. Malleable-Iron Fittings: ASME B16.3, Class 150 or 300, threaded.
3. Malleable-Iron Unions: ASME B16.39, Class 150 or 300, threaded.
4. Steel Flanges: ASME B16.5, Class 150 or 300, carbon steel, threaded.
5. Wrought-Steel Butt-Welding Fittings: ASME B16.9, Schedule 40.
6. Steel Flanges: ASME B16.5, Class 150 or 300, carbon steel.
7. Grooved-End Fittings and Couplings:

    a. Manufacturers: Subject to compliance with requirements, provide products by one of the following:

        1) Anvil International.
        2) Grinnell G-Fire by Johnson Controls Company.
        3) Star Pipe Products.
        4) Victaulic Company.
        5) Ward Manufacturing, Inc.

    b. Grooved-End Fittings: ASTM A 47/A 47M, malleable-iron castings or ASTM A 536, ductile-iron casting; with grooves according to AWWA C606 and dimensions matching steel pipe.
    c. Couplings: AWWA C606 or UL 213, for steel-pipe dimensions and rated for 300-psig minimum working pressure. Include ferrous housing sections, gasket suitable for compressed air, and bolts and nuts. Provide EDPM gaskets for oil-free compressed air. Provide NBR gaskets if compressed air contains oil or oil vapor.

B. Schedule 5, Steel Pipe: ASTM A 135, carbon steel with plain ends and zinc-plated finish.

1. Pressure-Seal Fittings: Listed and labeled by a qualified testing agency and FMG-approved, carbon-steel, pressure-seal housing with O-ring end seals suitable for compressed-air piping and rated for 300-psig minimum working pressure. Provide EDPM seals for oil-free compressed air. Provide NBR seals if compressed air contains oil or oil vapor.

a. Manufacturers: Subject to compliance with requirements, provide products by one of the following:

1) Grinnell G-Fire by Johnson Controls Company.
2) Victaulic Company.
3) Viega LLC.

C. Copper Tube: ASTM B 88, Type K or L and ASTM B 88, Type M seamless, drawn-temper, water tube.

1. Wrought-Copper Fittings: ASME B16.22, solder-joint pressure type or MSS SP-73, wrought copper with dimensions for brazed joints.
2. Cast-Copper-Alloy Flanges: ASME B16.24, Class 150 or 300.
3. Copper Unions: ASME B16.22 or MSS SP-123.
4. Press-Type Fittings, NPS 2 and Smaller: Wrought-copper fitting with EPDM O-ring seal in each end.

a. Manufacturers: Subject to compliance with requirements, provide products by one of the following:

1) Apollo Flow Controls; Conbraco Industries, Inc.
2) Elkhart Products Corporation.
3) Viega LLC.

5. Press-Type Fittings, NPS 2-1/2 to NPS 4: Bronze fitting with stainless-steel grip ring and EPDM O-ring seal in each end.

a. Manufacturers: Subject to compliance with requirements, provide products by the following:

1) Viega LLC.

6. Extruded-Tee Outlets: Procedure for making branch outlets in copper tube according to ASTM F 2014.

a. Manufacturers: Subject to compliance with requirements, provide products by the following:

1) T-DRILL Industries Inc.

7. Grooved-End Fittings and Couplings:

a. Manufacturers: Subject to compliance with requirements, provide products by one of the following:

1) Anvil International.
2) Grinnell G-Fire by Johnson Controls Company.
3) Victaulic Company.

b. Grooved-End Fittings: ASTM B 75, copper tube or ASTM B 584, bronze castings.
c. Couplings: Copper-tube dimensions and design similar to AWWA C606. Include ferrous housing sections, gasket suitable for compressed air, and bolts and nuts. Provide EDPM gasket for oil-free compressed air. Provide NBR gasket if compressed air contains oil or oil vapor.

D. Transition Couplings for Metal Piping: Metal coupling or other manufactured fitting same size as, with pressure rating at least equal to and ends compatible with, piping to be joined.

E. PVC Pipe: ASTM D 1785, Schedule 40.

1. PVC Fittings: ASTM D 2466, Schedule 40, socket type.

F. Blue ABS Piping System: Made of ASTM D 3965, ABS-resin modified to provide shatter-resistant pipe for compressed-air service. Pipe and fittings are light blue and sizes are in millimeters.

1. Manufacturers: Subject to compliance with requirements, provide products by the following:

a. IPEX USA LLC.

2. Transition Fittings, 20 to 63 mm: Composite union with ABS socket end, CR O-ring, and malleable-iron union nut and threaded end; with construction similar to MSS SP-107, transition union.
3. Transition Fittings, 90 to 110 mm: Flange assembly with ABS flange, CR gasket, and metal flange of material matching piping to be connected.
4. Valves, 20 to 63 mm: ABS union ball valve with socket ends.
5. Valves, 90 to 110 mm: ABS butterfly valve with lever handle.

G. Green ABS Piping System: Made of ASTM D 3965, ABS-resin modified to provide shatter-resistant pipe for compressed-air service. Pipe and fittings are dark green with SDR of 9.0 and same OD as ASTM A 53/A 53M, steel pipe.

1. Manufacturers: Subject to compliance with requirements, provide products by the following:

a. NIBCO INC.

2. Transition Fittings, NPS 1/2 to NPS 2: Composite union with ABS socket end, CR O-ring, ABS union nut, and brass solder-joint end; with construction similar to MSS SP-107, transition union.
3. Transition Fittings, NPS 2-1/2 to NPS 4: ABS flange, CR gasket, and metal flange of material matching piping to be connected.
4. Valves, NPS 1/2 to NPS 2: Union ball valve with socket ends.
5. Valves, NPS 2-1/2 to NPS 4: Union ball valve with flanged ends. Include safety exhaust feature in Part 3 "Valve Applications" Article if required.

H. HDPE Piping System: Made of ASTM D 1248, HDPE resin to provide shatter-resistant pipe for compressed-air service. Pipe and fittings are dark blue with pipe dimensions about the same OD as ASTM D 3035, PE pipe.

1. Manufacturers: Subject to compliance with requirements, provide products by the following:

a. Asahi/America.

2. Transition Fittings, NPS 1/2 to NPS 2: HDPE adapter with one socket end and one end with threaded brass insert.
3. Transition Fittings, NPS 2-1/2 to NPS 4: HDPE flange, CR gasket, and metal flange of material matching piping to be connected.

4. Valves, NPS 1/2 to NPS 3: HDPE union ball valve with socket ends.

2.2 JOINING MATERIALS

A. Pipe-Flange Gasket Materials: Suitable for compressed-air piping system contents.

1. ASME B16.21, nonmetallic, flat, asbestos free, 1/8-inch maximum thickness unless thickness or specific material is indicated.

a. Full-Face Type: For flat-face, Class 125, cast-iron and cast-bronze flanges.
b. Narrow-Face Type: For raised-face, Class 250, cast-iron and steel flanges.

B. Flange Bolts and Nuts: ASME B18.2.1, carbon steel, unless otherwise indicated.

C. Plastic Pipe-Flange Gasket, Bolts, and Nuts: Type and material recommended by piping system manufacturer, unless otherwise indicated.

D. Solder Filler Metals: ASTM B 32, lead-free alloys. Include water-flushable flux according to ASTM B 813.

E. Brazing Filler Metals: AWS A5.8/A5.8M, BCuP Series, copper-phosphorus alloys for general-duty brazing, unless otherwise indicated.

F. Welding Filler Metals: Comply with AWS D10.12/D10.12M for welding materials appropriate for wall thickness and chemical analysis of steel pipe being welded.

G. Solvent Cements for Joining Plastic Piping:

1. ABS Piping: ASTM D 2235.
2. PVC Piping: ASTM D 2564. Include primer complying with ASTM F 656.

2.3 VALVES

A. Metal Ball, Butterfly, Check, and Gate Valves: Comply with requirements in Section 22 0523.12 "Ball Valves for Plumbing Piping," Section 22 0523.13 "Butterfly Valves for Plumbing Piping," Section 22 0523.14 "Check Valves for Plumbing Piping," and Section 22 0523.15 "Gate Valves for Plumbing Piping."

2.4 DIELECTRIC FITTINGS

A. General Requirements: Assembly of copper alloy and ferrous materials with separating nonconductive insulating material. Include end connections compatible with pipes to be joined.

B. Dielectric Unions:

1. Manufacturers: Subject to compliance with requirements, provide products by one of the following:

a. A.Y. McDonald Mfg. Co.
b. Capitol Manufacturing Company.
c. Central Plastics Company.
d. HART Industrial Unions, LLC.

e. Jomar Valve.
f. Matco-Norca.
g. Viega LLC.
h. WATTS.
i. Wilkins.

2. Description:

a. Standard: ASSE 1079.
b. Pressure Rating: 250 psig.
c. End Connections: Solder-joint copper alloy and threaded ferrous.

C. Dielectric Flanges:

1. Manufacturers: Subject to compliance with requirements, provide products by one of the following:

a. Capitol Manufacturing Company.
b. Central Plastics Company.
c. Matco-Norca.
d. Viega LLC.
e. WATTS.
f. Wilkins.

2. Description:

a. Standard: ASSE 1079.
b. Factory-fabricated, bolted, companion-flange assembly.
c. Pressure Rating: 300 psig.
d. End Connections: Solder-joint copper alloy and threaded ferrous; threaded solder-joint copper alloy and threaded ferrous.

D. Dielectric-Flange Insulating Kits:

1. Manufacturers: Subject to compliance with requirements, provide products by one of the following:

a. Advance Products & Systems, Inc.
b. Calpico, Inc.
c. Central Plastics Company.
d. Pipeline Seal and Insulator, Inc.

2. Description:

a. Nonconducting materials for field assembly of companion flanges.
b. Pressure Rating: 150 psig.
c. Gasket: Neoprene or phenolic.
d. Bolt Sleeves: Phenolic or polyethylene.
e. Washers: Phenolic with steel backing washers.

2.5 FLEXIBLE PIPE CONNECTORS

A. Manufacturers: Subject to compliance with requirements, provide products by one of the following:

1. Flex-Hose Co., Inc.
2. Flexicraft Industries.
3. Hyspan Precision Products, Inc.
4. Mercer Rubber Co.
5. Metraflex Company (The).
6. Proco Products, Inc.
7. Unaflex.
8. Universal Metal Hose.

B. Bronze-Hose Flexible Pipe Connectors: Corrugated-bronze tubing with bronze wire-braid covering and ends brazed to inner tubing.

1. Working-Pressure Rating: 250 psig minimum.
2. End Connections, NPS 2 and Smaller: Threaded copper pipe or plain-end copper tube.
3. End Connections, NPS 2-1/2 and Larger: Flanged copper alloy.

C. Stainless-Steel-Hose Flexible Pipe Connectors: Corrugated-stainless-steel tubing with stainless-steel wire-braid covering and ends welded to inner tubing.

1. Working-Pressure Rating: 250 psig minimum.
2. End Connections, NPS 2 and Smaller: Threaded steel pipe nipple.
3. End Connections, NPS 2-1/2 and Larger: Flanged steel nipple.

2.6 SPECIALTIES

A. Safety Valves: ASME Boiler and Pressure Vessel Code: Section VIII, "Pressure Vessels," construction; National Board certified, labeled, and factory sealed; constructed of bronze body with poppet-type safety valve for compressed-air service.

1. Pressure Settings: Higher than discharge pressure and same or lower than receiver pressure rating.

B. Air-Main Pressure Regulators: Bronze body, direct acting, spring-loaded manual pressure-setting adjustment, and rated for 250-psig inlet pressure, unless otherwise indicated.

1. Type: Pilot operated.

C. Air-Line Pressure Regulators: Diaphragm or pilot operated, bronze body, direct acting, spring-loaded manual pressure-setting adjustment, and rated for 200-psig minimum inlet pressure, unless otherwise indicated.

D. Air-Line Pressure Regulators: Diaphragm operated, aluminum alloy or plastic body, direct acting, spring-loaded manual pressure-setting adjustment, and rated for 200-psig minimum inlet pressure, unless otherwise indicated.

E. Automatic Drain Valves: Stainless-steel body and internal parts, rated for 200-psig minimum working pressure, capable of automatic discharge of collected condensate. Include mounting bracket if wall mounting is indicated.

F. Coalescing Filters: Coalescing type with activated carbon capable of removing water and oil aerosols; with color-change dye to indicate when carbon is saturated and warning light to indicate when selected maximum pressure drop has been exceeded. Include mounting bracket if wall mounting is indicated.

G. Mechanical Filters: Two-stage, mechanical-separation-type, air-line filters. Equip with deflector plates, resin-impregnated-ribbon-type filters with edge filtration, and drain cock. Include mounting bracket if wall mounting is indicated.

H. Air-Line Lubricators: With drip chamber and sight dome for observing oil drop entering air stream; with oil-feed adjustment screw and quick-release collar for easy bowl removal. Include mounting bracket if wall mounting is indicated.

1. Provide with automatic feed device for supplying oil to lubricator.

2.7 QUICK COUPLINGS

A. Manufacturers: Subject to compliance with requirements, provide products by one of the following:

1. Aeroquip Corporation.
2. Bowes Manufacturing Inc.
3. Foster Manufacturing, Inc.
4. Milton Industries, Inc.
5. Parker Hannifin Corp.
6. Rectus Corp.
7. Schrader-Bridgeport/Standard Thomson.
8. TOMCO Products Inc.
9. Tuthill Corporation.

B. General Requirements for Quick Couplings: Assembly with locking-mechanism feature for quick connection and disconnection of compressed-air hose.

C. Automatic-Shutoff Quick Couplings: Straight-through brass body with O-ring or gasket seal and stainless-steel or nickel-plated-steel operating parts.

1. Socket End: With one-way valve and threaded inlet for connection to piping or threaded hose fitting.
2. Plug End: Flow-sensor-bleeder, check-valve type with barbed outlet for attaching hose.

D. Valveless Quick Couplings: Straight-through brass body with stainless-steel or nickel-plated-steel operating parts.

1. Socket End: With O-ring or gasket seal, without valve, and with barbed inlet for attaching hose.
2. Plug End: With barbed outlet for attaching hose.

2.8 HOSE ASSEMBLIES

A. Description: Compatible hose, clamps, couplings, and splicers suitable for compressed-air service, of nominal diameter indicated, and rated for 300-psig minimum working pressure, unless otherwise indicated.

1. Hose: Reinforced double-wire-braid, CR-covered hose for compressed-air service.
2. Hose Clamps: Stainless-steel clamps or bands.
3. Hose Couplings: Two-piece, straight-through, threaded brass or stainless-steel O-ring or gasket-seal swivel coupling with barbed ends for connecting two sections of hose.

4. Hose Splicers: One-piece, straight-through brass or stainless-steel fitting with barbed ends for connecting two sections of hose.

PART 3 - EXECUTION

3.1 PIPING APPLICATIONS

A. Compressed-Air Piping between Air Compressors and Receivers: Use one of the following piping materials for each size range:
   1. The product descriptions listed in the section may not all be used on this project. Refer to the Piping Material Schedules on the drawings for the specific application for each product or material. Products not shown on the schedule for the specific application may not be substituted without pre-approval from the Engineer. Where there is a conflict between the drawing schedule and specifications, the drawing schedule shall take precedent.

B. Low-Pressure Compressed-Air Distribution Piping: Use the following piping materials for each size range:
   1. The product descriptions listed in the section may not all be used on this project. Refer to the Piping Material Schedules on the drawings for the specific application for each product or material. Products not shown on the schedule for the specific application may not be substituted without pre-approval from the Engineer. Where there is a conflict between the drawing schedule and specifications, the drawing schedule shall take precedent.

C. High-Pressure Compressed-Air Distribution Piping: Use the following piping materials for each size range:
   1. The product descriptions listed in the section may not all be used on this project. Refer to the Piping Material Schedules on the drawings for the specific application for each product or material. Products not shown on the schedule for the specific application may not be substituted without pre-approval from the Engineer. Where there is a conflict between the drawing schedule and specifications, the drawing schedule shall take precedent.

D. Drain Piping: Use the following piping materials:
   1. The product descriptions listed in the section may not all be used on this project. Refer to the Piping Material Schedules on the drawings for the specific application for each product or material. Products not shown on the schedule for the specific application may not be substituted without pre-approval from the Engineer. Where there is a conflict between the drawing schedule and specifications, the drawing schedule shall take precedent.

3.2 VALVE APPLICATIONS

A. Metal General-Duty Valves: Comply with requirements and use valve types specified in "Valve Applications" Articles in Section 22 0523.12 "Ball Valves for Plumbing Piping," Section 22 0523.13 "Butterfly Valves for Plumbing Piping," Section 22 0523.14 "Check Valves for Plumbing Piping," and Section 22 0523.15 "Gate Valves for Plumbing Piping,"according to the following:

   1. Low-Pressure Compressed Air: Valve types specified for low-pressure compressed air.

2. High-Pressure Compressed Air: Valve types specified for medium-pressure compressed air.
3. Equipment Isolation NPS 2 and Smaller: Safety-exhaust, copper-alloy ball valve with exhaust vent and pressure rating at least as great as piping system operating pressure.
4. Grooved-end valves may be used with grooved-end piping and grooved joints.

B. Plastic General-Duty Valves: Provide valves, made by piping manufacturer, that are compatible with piping. Do not use plastic valves between air compressors and receivers.

1. Blue ABS Piping System: Ball and butterfly valves.
2. Green ABS Piping System: Ball valves.
3. HDPE Piping System: Ball valves.

3.3 PIPING INSTALLATION

A. Drawing plans, schematics, and diagrams indicate general location and arrangement of compressed-air piping. Indicated locations and arrangements were used to size pipe and calculate friction loss, expansion, air-compressor sizing, and other design considerations. Install piping as indicated unless deviations to layout are approved on Coordination Drawings.

B. Install piping concealed from view and protected from physical contact by building occupants, unless otherwise indicated and except in equipment rooms and service areas.

C. Install piping indicated to be exposed and piping in equipment rooms and service areas at right angles or parallel to building walls. Diagonal runs are prohibited, unless otherwise indicated.

D. Install piping above accessible ceilings to allow sufficient space for ceiling panel removal and to coordinate with other services occupying that space.

E. Install piping adjacent to equipment and machines to allow service and maintenance.

F. Install air and drain piping with 1 percent slope downward in direction of flow.

G. Install nipples, flanges, unions, transition and special fittings, and valves with pressure ratings same as or higher than system pressure rating, unless otherwise indicated.

H. Equipment and Specialty Flanged Connections:

1. Use steel companion flange with gasket for connection to steel pipe.
2. Use cast-copper-alloy companion flange with gasket and brazed or soldered joint for connection to copper tube. Do not use soldered joints for connection to air compressors or to equipment or machines producing shock or vibration.

I. Flanged joints may be used instead of specified joint for any piping or tubing system.

J. Extended-tee outlets with brazed branch connection may be used for copper tubing, within extruded-tee connection diameter to run tube diameter ratio for tube type, according to Extruded Tee Connections Sizes and Wall Thickness for Copper Tube (Inches) Table in ASTM F 2014.

K. Install eccentric reducers where compressed-air piping is reduced in direction of flow, with bottoms of both pipes and reducer fitting flush.

L. Install branch connections to compressed-air mains from top of main. Provide drain leg and drain trap at end of each main and branch and at low points.

M. Install thermometer and pressure gage on discharge piping from each air compressor and on each receiver. Comply with requirements in Section 22 0519 "Meters and Gages for Plumbing Piping."

N. Install piping to permit valve servicing.

O. Install piping free of sags and bends.

P. Install fittings for changes in direction and branch connections.

Q. Install seismic restraints on piping. Seismic-restraint devices are specified in Section 22 0548 "Vibration and Seismic Controls for Plumbing Piping and Equipment."

R. Install sleeves for piping penetrations of walls, ceilings, and floors. Comply with requirements for sleeves specified in Section 22 0517 "Sleeves and Sleeve Seals for Plumbing Piping."

S. Install sleeve seals for piping penetrations of concrete walls and slabs. Comply with requirements for sleeve seals specified in Section 22 0517 "Sleeves and Sleeve Seals for Plumbing Piping."

T. Install escutcheons for piping penetrations of walls, ceilings, and floors. Comply with requirements for escutcheons specified in Section 22 0518 "Escutcheons for Plumbing Piping."

3.4 JOINT CONSTRUCTION

A. Ream ends of pipes and tubes and remove burrs. Bevel plain ends of steel pipe.

B. Remove scale, slag, dirt, and debris from inside and outside of pipe and fittings before assembly.

C. Threaded Joints: Thread pipe with tapered pipe threads according to ASME B1.20.1. Cut threads full and clean using sharp dies. Ream threaded pipe ends to remove burrs and restore full ID. Join pipe fittings and valves as follows:

1. Apply appropriate tape or thread compound to external pipe threads unless dry seal threading is specified.
2. Damaged Threads: Do not use pipe or pipe fittings with threads that are corroded or damaged. Do not use pipe sections that have cracked or open welds.

D. Welded Joints for Steel Piping: Join according to AWS D10.12/D10.12M.

E. Brazed Joints for Copper Tubing: Join according to AWS's "Brazing Handbook," "Pipe and Tube" Chapter.

F. Soldered Joints: Apply ASTM B 813, water-flushable flux, unless otherwise indicated, to tube end. Join according to ASTM B 828 or CDA's "Copper Tube Handbook."

G. Extruded-Tee Outlets for Copper Tubing: Form branches according to ASTM F 2014, with tools recommended by procedure manufacturer, and using operators qualified according to Part 1 "Quality Assurance" Article.

H. Flanged Joints: Use asbestos-free, nonmetallic gasket suitable for compressed air. Join flanges with gasket and bolts according to ASME B31.9 for bolting procedure.

I. Grooved Joints: Assemble couplings with housing, gasket, lubricant, and bolts. Join according to AWWA C606 for grooved joints. Do not apply lubricant to prelubricated gaskets.

J. Heat-Fusion Joints for PE Piping: Clean and dry joining surfaces by wiping with clean cloth or paper towels. Join according to ASTM D 2657 for socket-fusion joints.

K. Pressure-Sealed Joints: Join with tools recommended by fitting manufacturer, using operators qualified according to Part 1 "Quality Assurance" Article.

L. Solvent-Cemented Joints for ABS Piping: Clean and dry joining surfaces. Join according to the following:

1. Comply with ASTM F 402 for safe-handling practice of cleaners, primers, and solvent cements.
2. Join according to ASME B31.9 for solvent-cemented joints and to ASTM D 2235 Appendix.

M. Solvent-Cemented Joints for PVC Piping: Clean and dry joining surfaces. Join according to the following:

1. Comply with ASTM F 402 for safe-handling practice of cleaners, primers, and solvent cements.
2. Apply primer and join according to ASME B31.9 for solvent-cemented joints and to ASTM D 2672.

N. Dissimilar Metal Piping Material Joints: Use dielectric fittings.

3.5 VALVE INSTALLATION

A. General-Duty Valves: Comply with requirements in Section 22 0523.12 "Ball Valves for Plumbing Piping," Section 22 0523.13 "Butterfly Valves for Plumbing Piping," Section 22 0523.14 "Check Valves for Plumbing Piping," and Section 22 0523.15 "Gate Valves for Plumbing Piping."

B. Install shutoff valves and unions or flanged joints at compressed-air piping to air compressors.

C. Install shutoff valve at inlet to each automatic drain valve, filter, lubricator, and pressure regulator.

D. Install check valves to maintain correct direction of compressed-air flow to and from compressed-air piping specialties and equipment.

3.6 DIELECTRIC FITTING INSTALLATION

A. Install dielectric fittings in piping at connections of dissimilar metal piping and tubing.

B. NPS 2 and Smaller: Use dielectric unions.

C. NPS 2-1/2 to NPS 4: Use dielectric flanges.

D. NPS 5and Larger: Use dielectric flange kits.

3.7 FLEXIBLE PIPE CONNECTOR INSTALLATION

A. Install flexible pipe connectors in discharge piping and in inlet air piping from remote air-inlet filter of each air compressor.

B. Install bronze-hose flexible pipe connectors in copper compressed-air tubing.

C. Install stainless-steel-hose flexible pipe connectors in steel compressed-air piping.

3.8 SPECIALTY INSTALLATION

A. Install safety valves on receivers in quantity and size to relieve at least the capacity of connected air compressors.

B. Install air-main pressure regulators in compressed-air piping at or near air compressors.

C. Install air-line pressure regulators in branch piping to equipment and tools.

D. Install automatic drain valves on aftercoolers, receivers, and dryers. Discharge condensate onto nearest floor drain.

E. Install coalescing filters in compressed-air piping at or near air compressors and upstream from mechanical filters. Mount on wall at locations indicated.

F. Install mechanical filters in compressed-air piping at or near air compressors and downstream from coalescing filters. Mount on wall at locations indicated.

G. Install air-line lubricators in branch piping to machine tools. Mount on wall at locations indicated.

H. Install quick couplings at piping terminals for hose connections.

I. Install hose assemblies at hose connections.

3.9 CONNECTIONS

A. Install unions, in piping NPS 2 and smaller, adjacent to each valve and at final connection to each piece of equipment and machine.

B. Install flanges, in piping NPS 2-1/2 and larger, adjacent to flanged valves and at final connection to each piece of equipment and machine.

3.10 HANGER AND SUPPORT INSTALLATION

A. Comply with requirements in Section 22 0548 "Vibration and Seismic Controls for Plumbing Piping and Equipment" for seismic-restraint devices.

B. Comply with requirements in Section 22 0529 "Hangers and Supports for Plumbing Piping and Equipment" for pipe hanger and support devices.

C. Vertical Piping: MSS Type 8 or 42, clamps.

D. Individual, Straight, Horizontal Piping Runs:

1. 100 Feet or Less: MSS Type 1, adjustable, steel clevis hangers.
2. Longer Than 100 Feet: MSS Type 43, adjustable roller hangers.

E. Multiple, Straight, Horizontal Piping Runs 100 Feet or Longer: MSS Type 44, pipe rolls. Support pipe rolls on trapeze.

F. Base of Vertical Piping: MSS Type 52, spring hangers.

G. Support horizontal piping within 12 inches of each fitting and coupling.

H. Rod diameter may be reduced 1 size for double-rod hangers, with 3/8-inch minimum rods.

I. Install hangers for Schedule 40, steel piping with the following maximum horizontal spacing and minimum rod diameters:

1. NPS 1/4 to NPS 1/2: 96 inches with 3/8-inch rod.
2. NPS 3/4 to NPS 1-1/4: 84 inches with 3/8-inch rod.
3. NPS 1-1/2: 12 feet with 3/8-inch rod.
4. NPS 2: 13 feet with 3/8-inch rod.
5. NPS 2-1/2: 14 feet with 1/2-inch rod.
6. NPS 3: 15 feet with 1/2-inch rod.
7. NPS 3-1/2: 16 feet with 1/2-inch rod.
8. NPS 4: 17 feet with 5/8-inch rod.
9. NPS 5: 19 feet with 5/8-inch rod.
10. NPS 6: 21 feet with 3/4-inch rod.
11. NPS 8: 24 feet with 3/4-inch rod.
12. NPS 10: 26 feet with 7/8-inch rod.
13. NPS 12: 30 feet with 7/8-inch rod.

J. Install supports for vertical, Schedule 40, steel piping every 15 feet.

K. Install hangers for Schedule 5, steel piping with the following maximum horizontal spacing and minimum rod diameters:

1. NPS 1/2: 72 inches with 3/8-inch rod.
2. NPS 3/4: 84 inches with 3/8-inch rod.
3. NPS 1: 96 inches with 3/8-inch rod.
4. NPS 1-1/4: 108 inches with 3/8-inch rod.
5. NPS 1-1/2: 10 feet with 3/8-inch rod.
6. NPS 2: 11 feet with 3/8-inch rod.

L. Install supports for vertical, Schedule 5, steel piping every 10 feet.

M. Install hangers for copper tubing with the following maximum horizontal spacing and minimum rod diameters:

1. NPS 1/4: 60 inches with 3/8-inch rod.
2. NPS 3/8 and NPS 1/2: 72 inches with 3/8-inch rod.
3. NPS 3/4: 84 inches with 3/8-inch rod.
4. NPS 1: 96 inches with 3/8-inch rod.
5. NPS 1-1/4: 108 inches with 3/8-inch rod.
6. NPS 1-1/2: 10 feet with 3/8-inch rod.
7. NPS 2: 11 feet with 3/8-inch rod.
8. NPS 2-1/2: 13 feet with 1/2-inch rod.
9. NPS 3: 14 feet with 1/2-inch rod.

10. NPS 3-1/2: 15 feet with 1/2-inch rod.
11. NPS 4: 16 feet with 1/2-inch rod.
12. NPS 5: 18 feet with 1/2-inch rod.
13. NPS 6: 20 feet with 5/8-inch rod.
14. NPS 8: 23 feet with 3/4-inch rod.

N. Install supports for vertical copper tubing every 10 feet.

O. Install vinyl-coated hangers for ABS piping with the following maximum horizontal spacing and minimum rod diameters:

1. All Sizes: Install continuous support for piping with compressed air at normal operating temperature above 100 deg F.
2. NPS 3/8 and NPS 1/2: 30 inches with 3/8-inch rod.
3. NPS 3/4: 38 inches with 3/8-inch rod.
4. NPS 1: 40 inches with 3/8-inch rod.
5. NPS 1-1/4: 45 inches with 3/8-inch rod.
6. NPS 1-1/2: 52 inches with 3/8-inch rod.
7. NPS 2: 58 inches with 3/8-inch rod.
8. NPS 3: 68 inches with 1/2-inch rod.
9. NPS 4: 76 inches with 1/2-inch rod.

P. Install supports for vertical ABS piping every 48 inches.

Q. Install vinyl-coated hangers for HDPE piping with the following maximum horizontal spacing and minimum rod diameters:

1. All Sizes: Install continuous support for piping with compressed air at normal operating temperature above 100 deg F.
2. NPS 1/2: 30 inches with 3/8-inch rod.
3. NPS 3/4: 35 inches with 3/8-inch rod.
4. NPS 1: 40 inches with 3/8-inch rod.
5. NPS 1-1/4: 43 inches with 3/8-inch rod.
6. NPS 1-1/2: 49 inches with 3/8-inch rod.
7. NPS 2: 55 inches with 3/8-inch rod.
8. NPS 3 and NPS 4: 96 inches with 1/2-inch rod.

R. Install supports for vertical HDPE piping every 48 inches.

3.11 LABELING AND IDENTIFICATION

A. Install identifying labels and devices for general-service compressed-air piping, valves, and specialties. Comply with requirements in Section 22 0553 "Identification for Plumbing Piping and Equipment."

3.12 FIELD QUALITY CONTROL

A. Perform field tests and inspections.

B. Tests and Inspections:

1. Piping Leak Tests for Metal Compressed-Air Piping: Test new and modified parts of existing piping. Cap and fill general-service compressed-air piping with oil-free dry air or

gaseous nitrogen to pressure of 50 psig above system operating pressure, but not less than 150 psig. Isolate test source and let stand for four hours to equalize temperature. Refill system, if required, to test pressure; hold for two hours with no drop in pressure.

2. Piping Leak Tests for ABS Compressed-Air Piping: Test new and modified parts of existing piping. Cap and fill general-service compressed-air piping with oil-free dry air or gaseous nitrogen, at temperature of 110 deg F or less, to pressure of 40 psig above system operating pressure, but not less than 80 psig or more than 120 psig. Isolate test source and let stand for four hours to equalize temperature. Refill system, if required, to test pressure; hold for two hours with no drop in pressure.
3. Piping Leak Tests for HDPE Compressed-Air Piping: Test new and modified parts of existing piping. Cap and fill general-service compressed-air piping with oil-free dry air or gaseous nitrogen, at temperature of 100 deg F or less, to pressure of 40 psig above system operating pressure, but not less than 150 psig or more than 180 psig. Isolate test source and let stand for four hours to equalize temperature. Refill system, if required, to test pressure; hold for two hours with no drop in pressure.
4. Repair leaks and retest until no leaks exist.
5. Inspect filters lubricators and pressure regulators for proper operation.

C. Prepare test reports.

END OF SECTION

SECTION 22 1519

GENERAL-SERVICE PACKAGED AIR COMPRESSORS AND RECEIVERS

PART 1 - GENERAL

1.1 RELATED DOCUMENTS

A. Drawings and general provisions of the Contract, including General and Supplementary Conditions and Division 01 Specification Sections, apply to this Section.

1.2 SUMMARY

A. Section Includes:

1. Lubricated, reciprocating air compressors.
2. Oil-free, reciprocating air compressors.
3. Oilless, reciprocating air compressors.
4. Oil-free, rotary-screw air compressors.
5. Oil-flooded, rotary-screw air compressors.
6. Oil-free, rotary, sliding-vane air compressors.
7. Oil-sealed, rotary, sliding-vane air compressors.
8. Inlet-air filters.
9. Air-cooled, compressed-air aftercoolers.
10. Water-cooled, compressed-air aftercoolers.
11. Refrigerant compressed-air dryers.
12. Desiccant compressed-air dryers.
13. Computer interface cabinet.

1.3 DEFINITIONS

A. Actual Air: Air delivered from air compressors. Flow rate is delivered compressed air measured in acfm.

B. Standard Air: Free air at 68 deg F and 1 atmosphere before compression or expansion and measured in scfm.

1.4 ACTION SUBMITTALS

A. Product Data: For each type of product.

1. Include rated capacities, operating characteristics, electrical characteristics, and furnished specialties and accessories.

B. Shop Drawings:

1. Include diagrams for power, signal, and control wiring.

C. Delegated-Design Submittal: For compressed-air equipment mounting.

1. Detail fabrication and assembly of supports.
2. Include design calculations for selecting vibration isolators and seismic restraints and for designing vibration isolation bases.

1.5 INFORMATIONAL SUBMITTALS

A. Seismic Qualification Certificates: For compressed-air equipment, accessories, and components, from manufacturer.

1. Basis for Certification: Indicate whether withstand certification is based on actual test of assembled components or on calculation.
2. Dimensioned Outline Drawings of Equipment Unit: Identify center of gravity and locate and describe mounting and anchorage provisions.
3. Detailed description of equipment anchorage devices on which the certification is based and their installation requirements.

1.6 CLOSEOUT SUBMITTALS

A. Operation and Maintenance Data: For compressed-air equipment to include in emergency, operation, and maintenance manuals.

1.7 MAINTENANCE MATERIAL SUBMITTALS

A. Furnish extra materials that match products installed and that are packaged with protective covering for storage and identified with labels describing contents.

1. Air-Compressor, Inlet-Air-Filter Elements.
2. Belts: Two for each belt-driven compressor.

1.8 FIELD CONDITIONS

A. Interruption of Existing Compressed-Air Service: Do not interrupt service to facilities occupied by Owner or others unless permitted under the following conditions and then only after arranging to provide temporary service according to requirements indicated:

1. Notify Architect no fewer than two days in advance of proposed interruption of compressed-air service.
2. Do not proceed with interruption of compressed-air service without Architect's written permission.

1.9 COORDINATION

A. Coordinate sizes and locations of concrete bases with actual equipment provided.

PART 2 - PRODUCTS

2.1 SYSTEM DESCRIPTION

A. Electrical Components, Devices, and Accessories: Listed and labeled as defined in NFPA 70, by a qualified testing agency, and marked for intended location and application.

B. ASME Compliance: Fabricate and label receivers to comply with ASME Boiler and Pressure Vessel Code.

2.2 PERFORMANCE REQUIREMENTS

A. Delegated Design: Engage a qualified professional engineer, as defined in Section 01 4000 "Quality Requirements," to design compressed-air equipment mounting.

B. Seismic Performance: Compressed-air equipment shall withstand the effects of earthquake motions determined according to ASCE/SEI 7.

1. The term "withstand" means "the unit will remain in place without separation of any parts from the device when subjected to the seismic forces specified and the unit will be fully operational after the seismic event."

2.3 GENERAL REQUIREMENTS FOR PACKAGED AIR COMPRESSORS AND RECEIVERS

A. General Description: Factory-assembled, -wired, -piped, and -tested; electric-motor-driven; air-cooled; continuous-duty air compressors and receivers that deliver air of quality equal to intake air.

B. Control Panels: Automatic control station with load control and protection functions. Comply with NEMA ICS 2 and UL 508.

1. Enclosure: NEMA ICS 6, Type 12 control panel unless otherwise indicated.
2. Motor Controllers: Full-voltage, combination magnetic type with undervoltage release feature and motor-circuit-protector-type disconnecting means and short-circuit protective device.
3. Control Voltage: 120-V ac or less, using integral control power transformer.
4. Motor Overload Protection: Overload relay in each phase.
5. Starting Devices: Hand-off-automatic selector switch in cover of control panel, plus pilot device for automatic control.
6. Automatic control switches to sequence lead-lag compressors for multiplex air compressors.
7. Instrumentation: Include discharge-air pressure gage, air-filter maintenance indicator, hour meter, compressor discharge-air and coolant temperature gages, and control transformer.
8. Alarm Signal Device: For connection to alarm system to indicate when backup air compressor is operating.

C. Receivers: Steel tank constructed according to ASME Boiler and Pressure Vessel Code: Section VIII, Division 1.

1. Pressure Rating: At least as high as highest discharge pressure of connected compressors, and bearing appropriate code symbols.
2. Interior Finish: Corrosion-resistant coating.
3. Accessories: Include safety valve, pressure gage, drain, and pressure-reducing valve.

D. Mounting Frame: Fabricate mounting and attachment to pressure vessel with reinforcement strong enough to resist packaged equipment movement during a seismic event when base is anchored to building structure.

2.4 LUBRICATED, RECIPROCATING AIR COMPRESSORS

A. Manufacturers: Subject to compliance with requirements, provide products by the following:

1. Ingersoll-Rand.

B. Compressor(s): Lubricated, reciprocating-piston type with lubricated compression chamber and crankcase.

1. Submerged gear-type oil pump.
2. Oil filter.
3. Combined high discharge-air temperature and low lubrication-oil pressure switch.
4. Belt guard totally enclosing pulleys and belts.

C. Capacities and Characteristics:

1. Air Compressor(s): single or two stage.

a. Intercooler between stages of two-stage units.

2. The equipment descriptions listed in the section may not all be used on this project. Refer to the Equipment Schedules on the drawings for the specific application for each product or material. Products not shown on the schedule for the specific application may not be substituted without pre-approval from the Engineer. Where there is a conflict between the drawing schedules and specifications, the drawing schedules shall take precedent.

3. Receiver: ASME construction steel tank.

a. Arrangement: Vertical.
b. Interior Finish: Epoxy coating.
c. Pressure Rating: 250 psig minimum.
d. Drain: Automatic valve.

2.5 OIL-FREE, RECIPROCATING AIR COMPRESSORS

A. Manufacturers: Subject to compliance with requirements, provide products by the following:

1. Ingersoll-Rand.

B. Compressor(s): Oil-free, reciprocating-piston type with nonlubricated compression chamber, lubricated crankcase, and of construction that prohibits oil from entering compression chamber.

1. Submerged gear-type oil pump.
2. Oil filter.
3. Combined high discharge-air temperature and low lubrication-oil pressure switch.
4. Belt guard totally enclosing pulleys and belts.

C. Capacities and Characteristics:

1. Air Compressor(s): Three; single stage.
2. The equipment descriptions listed in the section may not all be used on this project. Refer to the Equipment Schedules on the drawings for the specific application for each product or material. Products not shown on the schedule for the specific application may not be substituted without pre-approval from the Engineer. Where there is a conflict between the drawing schedules and specifications, the drawing schedules shall take precedent.
3. Mounting: Tank mounted.

4. Receiver: ASME construction steel tank.

    a. Arrangement: Vertical.
    b. Interior Finish: Epoxy coating.
    c. Pressure Rating: 250 psig minimum.
    d. Drain: Automatic valve.

2.6 OILLESS, RECIPROCATING AIR COMPRESSORS

A. Manufacturers: Subject to compliance with requirements, provide products by the following:

1. Ingersoll-Rand.

B. Compressor(s): Oilless (nonlubricated), reciprocating-piston type, with sealed oil-free bearings, that deliver air of quality equal to intake air.

1. High discharge-air temperature switch.
2. Belt guard totally enclosing pulleys and belts.

C. Capacities and Characteristics:

1. Air Compressor(s): Two; single or two stage.

    a. Intercooler between stages of two-stage units.
2. Discharge-Air Pressure: 200 psig.
3. The equipment descriptions listed in the section may not all be used on this project. Refer to the Equipment Schedules on the drawings for the specific application for each product or material. Products not shown on the schedule for the specific application may not be substituted without pre-approval from the Engineer. Where there is a conflict between the drawing schedules and specifications, the drawing schedules shall take precedent

4. Receiver: ASME construction steel tank.

    a. Arrangement: Vertical.
    b. Interior Finish: Epoxy coating.

c. Pressure Rating: 250 psig minimum.
d. Drain: Automatic valve.

2.7 OIL-FREE, ROTARY-SCREW AIR COMPRESSORS

A. Manufacturers: Subject to compliance with requirements, provide products by the following:

1. Ingersoll-Rand.

B. Compressor(s): Oil-free, rotary-screw type with nonlubricated helical screws and lubricated gear box, and of construction that prohibits oil from entering compression chamber.

1. Coupling: Nonlubricated, flexible type.
2. Cooling/Lubrication System: Unit-mounted, air-cooled exchanger package prepiped to unit; with air pressure circulation system with coolant stop valve, full-flow coolant filter, and thermal bypass valve.
3. Air Filter: Dry type, with maintenance indicator and cleanable, replaceable filter element.
4. Air/Coolant Receiver and Separation System: 150-psig-rated steel tank with ASME safety valve, coolant-level gage, multistage air-coolant separator element, minimum pressure valve, blowdown valve, discharge check valve, coolant stop valve, full-flow coolant filter, and thermal bypass valve.
5. Capacity Control: Capacity modulation between zero and 100 percent air delivery, with operating pressures between 50 and 100 psig. Include necessary control to hold constant pressure. When air demand is zero, unload compressor by using pressure switch and blowdown valve.

C. Capacities and Characteristics:

1. Air Compressor(s): Two; single stage.
2. Discharge-Air Pressure: 175 psig.
3. The equipment descriptions listed in the section may not all be used on this project. Refer to the Equipment Schedules on the drawings for the specific application for each product or material. Products not shown on the schedule for the specific application may not be substituted without pre-approval from the Engineer. Where there is a conflict between the drawing schedules and specifications, the drawing schedules shall take precedent

4. Receiver: ASME construction steel tank.

a. Arrangement: Vertical.
b. Interior Finish: Epoxy
c. Pressure Rating: 200 psig minimum.
d. Drain: Automatic valve.

5. Enclosure: Steel with sound-attenuating material lining.

2.8 OIL-FLOODED, ROTARY-SCREW AIR COMPRESSORS

A. Manufacturers: Subject to compliance with requirements, provide products by the following:

1. Ingersoll-Rand.

B. Compressor(s): Oil-flooded, rotary-screw type with lubricated helical screws and lubricated gear box.

1. Coupling: Nonlubricated, flexible type.
2. Cooling/Lubrication System: Unit-mounted, air-cooled exchanger package prepiped to unit; with air pressure circulation system with coolant stop valve, full-flow coolant filter, and thermal bypass valve.
3. Air Filter: Dry type, with maintenance indicator and cleanable, replaceable filter element.
4. Air/Coolant Receiver and Separation System: 150-psig-rated steel tank with ASME safety valve, coolant-level gage, multistage air-coolant separator element, minimum pressure valve, blowdown valve, discharge check valve, coolant stop valve, full-flow coolant filter, and thermal bypass valve.
5. Capacity Control: Capacity modulation between zero and 100 percent air delivery, with operating pressures between 50 and 100 psig. Include necessary control to hold constant pressure. When air demand is zero, unload compressor by using pressure switch and blowdown valve.

C. Capacities and Characteristics:

1. Air Compressor(s): Two; single or two stage.
2. Discharge-Air Pressure: 200 psig.
3. The equipment descriptions listed in the section may not all be used on this project. Refer to the Equipment Schedules on the drawings for the specific application for each product or material. Products not shown on the schedule for the specific application may not be substituted without pre-approval from the Engineer. Where there is a conflict between the drawing schedules and specifications, the drawing schedules shall take precedent

4. Receiver: ASME construction steel tank.

   a. Arrangement: Vertical.
   b. Interior Finish: Epoxy coating.
   c. Pressure Rating: 250 psig minimum.
   d. Drain: Automatic valve.

5. Enclosure: Steel with sound-attenuating material lining.

2.9 OIL-FREE, ROTARY, SLIDING-VANE AIR COMPRESSORS

A. Manufacturers: Subject to compliance with requirements, provide products by the following:

1. Becker Pumps Corp.

B. Compressor(s): Oil-free, nonpulsating, rotary, sliding-vane type with nonlubricated sliding vanes.

1. Cleanable inlet screens.
2. Outlet silencers on discharge connections.

C. Capacities and Characteristics:

1. Air Compressor(s): Two; single stage.
2. Discharge-Air Pressure: 25 psig.

3. Mounting: Tank mounted.
4. The equipment descriptions listed in the section may not all be used on this project. Refer to the Equipment Schedules on the drawings for the specific application for each product or material. Products not shown on the schedule for the specific application may not be substituted without pre-approval from the Engineer. Where there is a conflict between the drawing schedules and specifications, the drawing schedules shall take precedent

5. Receiver: ASME construction steel tank.

    a. Arrangement: Vertical.
    b. Interior Finish: Epoxy coating.
    c. Pressure Rating: 100 psig minimum.
    d. Drain: Automatic valve.

2.10 OIL-SEALED, ROTARY, SLIDING-VANE AIR COMPRESSORS

A. Manufacturers: Subject to compliance with requirements, provide products by the following:

1. Becker Pumps Corp.

B. Compressor(s): Nonpulsating, rotary, sliding-vane type with oil-sealed sliding vanes.

1. Cleanable inlet screens.
2. Outlet silencers and oil-mist separators on discharge connections.

C. Capacities and Characteristics:

1. Air Compressor(s): Two; single stage.
2. Discharge-Air Pressure: 125 psig.
3. Mounting: Tank mounted.
4. The equipment descriptions listed in the section may not all be used on this project. Refer to the Equipment Schedules on the drawings for the specific application for each product or material. Products not shown on the schedule for the specific application may not be substituted without pre-approval from the Engineer. Where there is a conflict between the drawing schedules and specifications, the drawing schedules shall take precedent

5. Receiver: ASME construction steel tank.

    a. Arrangement: Vertical.
    b. Interior Finish: Epoxy coating.
    c. Pressure Rating: 150 psig minimum.
    d. Drain: Automatic valve.

2.11 INLET-AIR FILTERS

A. Description: Combination inlet-air filter-silencer, suitable for remote installation, for each air compressor.

1. Construction: Weatherproof housing for replaceable, dry-type filter element, with silencer

tubes or other method of sound reduction.
2. Capacity: Match capacity of air compressor, with filter having collection efficiency of 99 percent retention of particles larger than 10 micrometers.

B. Description: Combination inlet-air filter-silencer, suitable for remote installation, for multiple air compressors.

1. Construction: Weatherproof housing for replaceable, dry-type filter element, with silencer tubes or other method of sound reduction.
2. Capacity: Match total capacity of connected air compressors, with filter having collection efficiency of 99 percent retention of particles larger than 10 micrometers.

2.12 AIR-COOLED, COMPRESSED-AIR AFTERCOOLERS

A. Manufacturers: Subject to compliance with requirements, provide products by the following:

1. Ingersoll-Rand.

B. Description: Electric-motor-driven, fan-operation, finned-tube unit; rated at 250 psig and leak tested at 350-psig minimum air pressure; in capacities indicated. Size units to cool compressed air in compressor-rated capacities to 10 deg F above summertime maximum ambient temperature. Include moisture separator and automatic drain.

C. Capacities and Characteristics:

1. The equipment descriptions listed in the section may not all be used on this project. Refer to the Equipment Schedules on the drawings for the specific application for each product or material. Products not shown on the schedule for the specific application may not be substituted without pre-approval from the Engineer. Where there is a conflict between the drawing schedules and specifications, the drawing schedules shall take precedent.

2.13 Water-Cooled, Compressed-Air Aftercoolers

A. Manufacturers: Subject to compliance with requirements, provide products by the following:

1. Ingersoll-Rand.

B. Description: Shell-and-tube unit, rated at 250 psig and leak tested at 350-psig minimum air pressure, in capacities indicated. Include moisture separator and automatic drain.

C. Capacities and Characteristics:
1. The equipment descriptions listed in the section may not all be used on this project. Refer to the Equipment Schedules on the drawings for the specific application for each product or material. Products not shown on the schedule for the specific application may not be substituted without pre-approval from the Engineer. Where there is a conflict between the drawing schedules and specifications, the drawing schedules shall take precedent.

2.14 REFRIGERANT COMPRESSED-AIR DRYERS

A. Manufacturers: Subject to compliance with requirements, provide products by the following:

1. Ingersoll-Rand.

B. Description: Noncycling, air-cooled, electric-motor-driven unit with steel enclosure and capability to deliver 35 deg F, 100-psig air at dew point. Include automatic ejection of condensate from airstream, step-down transformers, disconnect switches, inlet and outlet pressure gages, thermometers, automatic controls, and filters.

C. Capacities and Characteristics:

a. The equipment descriptions listed in the section may not all be used on this project. Refer to the Equipment Schedules on the drawings for the specific application for each product or material. Products not shown on the schedule for the specific application may not be substituted without pre-approval from the Engineer. Where there is a conflict between the drawing schedules and specifications, the drawing schedules shall take precedent.

2.15 DESICCANT COMPRESSED-AIR DRYERS

A. Manufacturers: Subject to compliance with requirements, provide products by the following:

1. Ingersoll-Rand.

B. Description: Twin-tower unit with purge system, mufflers, and capability to deliver plus 10 deg F, 100-psig air at dew point. Include dew point controlled purge, step-down transformers, disconnect switches, inlet and outlet pressure gages, thermometers, automatic controls, and filters.

C. Capacities and Characteristics:

1. The equipment descriptions listed in the section may not all be used on this project. Refer to the Equipment Schedules on the drawings for the specific application for each product or material. Products not shown on the schedule for the specific application may not be substituted without pre-approval from the Engineer. Where there is a conflict between the drawing schedules and specifications, the drawing schedules shall take precedent.

2.16 COMPUTER INTERFACE CABINET

A. Description:

1. Wall mounting.
2. Welded steel with white enamel finish.
3. Gasketed door.
4. Grounding device.
5. Factory-installed, signal circuit boards.
6. Power transformer.
7. Circuit breaker.
8. Wiring terminal board.

9. Internal wiring capable of interfacing 20 alarm signals.

2.17 MOTORS

A. Comply with NEMA designation, temperature rating, service factor, and efficiency requirements for motors specified in Section 22 0513 "Common Motor Requirements for Plumbing Equipment."

1. Enclosure: Totally enclosed, fan cooled.
2. Motor Sizes: Minimum size as indicated. If not indicated, large enough so driven load does not require motor to operate in service factor range above 1.0.

PART 3 - EXECUTION

3.1 EQUIPMENT INSTALLATION

A. Equipment Mounting:

1. Install air compressors, aftercoolers, and air dryers on cast-in-place concrete equipment base(s). Comply with requirements for equipment bases and foundations specified in Section 03 3000 "Cast-in-Place Concrete."
2. Install desiccant compressed-air dryers on cast-in-place concrete equipment base(s). Comply with requirements for equipment bases and foundations specified in Section 03 3000 "Cast-in-Place Concrete."
3. Comply with requirements for vibration isolation and seismic control devices specified in Section 22 0548 "Vibration and Seismic Controls for Plumbing Piping and Equipment"
4. Comply with requirements for vibration isolation devices specified in Section 22 0548.13 "Vibration Controls for Plumbing Piping and Equipment."

B. Install compressed-air equipment anchored to substrate.

C. Arrange equipment so controls and devices are accessible for servicing.

D. Maintain manufacturer's recommended clearances for service and maintenance.

E. Install the following devices on compressed-air equipment:

1. Thermometer, Pressure Gage, and Safety Valve: Install on each compressed-air receiver.
2. Pressure Regulators: Install downstream from air compressors and dryers.
3. Automatic Drain Valves: Install on aftercoolers, receivers, and dryers. Discharge condensate over nearest floor drain.

3.2 CONNECTIONS

A. Comply with requirements for piping specified in Section 22 1513 "General-Service Compressed-Air Piping." Drawings indicate general arrangement of piping, fittings, and specialties.

B. Where installing piping adjacent to machine, allow space for service and maintenance.

3.3 IDENTIFICATION

A. Identify general-service air compressors and components. Comply with requirements for identification specified in Section 22 0553 "Identification for Plumbing Piping and Equipment."

3.4 STARTUP SERVICE

A. Engage a factory-authorized service representative to perform startup service.

1. Complete installation and startup checks according to manufacturer's written instructions.
2. Check for lubricating oil in lubricated-type equipment.
3. Check belt drives for proper tension.
4. Verify that air-compressor inlet filters and piping are clear.
5. Check for equipment vibration-control supports and flexible pipe connectors, and verify that equipment is properly attached to substrate.
6. Check safety valves for correct settings. Ensure that settings are higher than air-compressor discharge pressure, but not higher than rating of system components.
7. Check for proper seismic restraints.
8. Drain receiver tanks.
9. Operational Test: After electrical circuitry has been energized, start units to confirm proper motor rotation and unit operation.
10. Test and adjust controls and safeties.

3.5 DEMONSTRATION

A. Engage a factory-authorized service representative to train Owner's maintenance personnel to adjust, operate, and maintain air compressors, aftercoolers, and air dryers.

END OF SECTION

SECTION 22 2311

FACILITY NATURAL-GAS PIPING

PART 1 - GENERAL

1.1 SUMMARY

A. Section Includes:

1. Pipes, tubes, and fittings.
2. Piping specialties.
3. Piping and tubing joining materials.
4. Valves.
5. Pressure regulators.

1.2 PERFORMANCE REQUIREMENTS

A. Minimum Operating-Pressure Ratings:

1. Piping and Valves: 100 psig minimum unless otherwise indicated.
2. Service Regulators: 65 psig minimum unless otherwise indicated.

B. Natural-Gas System Pressures within Buildings: Two pressure ranges. Primary pressure is more than 0.5 psig but not more than 2 psig, and is reduced to secondary pressure of 0.5 psig or less.

C. Delegated Design: Design restraints and anchors for natural-gas piping and equipment, including comprehensive engineering analysis by a qualified professional engineer, using performance requirements and design criteria indicated.

1.3 ACTION SUBMITTALS

A. Product Data: For each type of product indicated.

B. Shop Drawings: For facility natural-gas piping layout. Include plans, piping layout and elevations, sections, and details for fabrication of pipe anchors, hangers, supports for multiple pipes, alignment guides, expansion joints and loops, and attachments of the same to building structure. Detail location of anchors, alignment guides, and expansion joints and loops.

1.4 INFORMATIONAL SUBMITTALS

A. Welding certificates.

B. Field quality-control reports.

1.5 CLOSEOUT SUBMITTALS

A. Operation and maintenance data.

1.6 QUALITY ASSURANCE

A. Steel Support Welding Qualifications: Qualify procedures and personnel according to AWS D1.1/D1.1M, "Structural Welding Code - Steel."

B. Pipe Welding Qualifications: Qualify procedures and operators according to ASME Boiler and Pressure Vessel Code.

C. Electrical Components, Devices, and Accessories: Listed and labeled as defined in NFPA 70, by a qualified testing agency, and marked for intended location and application.

PART 2 - PRODUCTS

2.1 PIPES, TUBES, AND FITTINGS

A. Steel Pipe: ASTM A 53/A 53M, black steel, Schedule 40, Type E or S, Grade B.

1. Malleable-Iron Threaded Fittings: ASME B16.3, Class 150, standard pattern.
2. Wrought-Steel Welding Fittings: ASTM A 234/A 234M for butt welding and socket welding.
3. Unions: ASME B16.39, Class 150, malleable iron with brass-to-iron seat, ground joint, and threaded ends.
4. Protective Coating for Underground Piping: Factory-applied, three-layer coating of epoxy, adhesive, and PE.

    a. Joint Cover Kits: Epoxy paint, adhesive, and heat-shrink PE sleeves.

B. PE Pipe: ASTM D 2513, SDR 11.

1. PE Fittings: ASTM D 2683, socket-fusion type or ASTM D 3261, butt-fusion type with dimensions matching PE pipe.
2. PE Transition Fittings: Factory-fabricated fittings with PE pipe complying with ASTM D 2513, SDR 11; and steel pipe complying with ASTM A 53/A 53M, black steel, Schedule 40, Type E or S, Grade B.
3. Anodeless Service-Line Risers: Factory fabricated and leak tested.

    a. Underground Portion: PE pipe complying with ASTM D 2513, SDR 11 inlet.
    b. Casing: Steel pipe complying with ASTM A 53/A 53M, Schedule 40, black steel, Type E or S, Grade B, with corrosion-protective coating covering. Vent casing aboveground.
    c. Aboveground Portion: PE transition fitting.
    d. Outlet shall be threaded or suitable for welded connection.
    e. Tracer wire connection.
    f. Ultraviolet shield.
    g. Stake supports with factory finish to match steel pipe casing or carrier pipe.

4. Transition Service-Line Risers: Factory fabricated and leak tested.

    a. Underground Portion: PE pipe complying with ASTM D 2513, SDR 11 inlet connected to steel pipe complying with ASTM A 53/A 53M, Schedule 40, Type E or S, Grade B, with corrosion-protective coating for aboveground outlet.
    b. Outlet shall be threaded or suitable for welded connection.
    c. Bridging sleeve over mechanical coupling.
    d. Factory-connected anode.

e. Tracer wire connection.
f. Ultraviolet shield.
g. Stake supports with factory finish to match steel pipe casing or carrier pipe.

2.2 PIPING SPECIALTIES

A. Appliance Flexible Connectors:

1. Indoor, Fixed-Appliance Flexible Connectors: Comply with ANSI Z21.24.
2. Indoor, Movable-Appliance Flexible Connectors: Comply with ANSI Z21.69.
3. Outdoor, Appliance Flexible Connectors: Comply with ANSI Z21.75.
4. Corrugated stainless-steel tubing with polymer coating.
5. Operating-Pressure Rating: 0.5 psig.
6. End Fittings: Zinc-coated steel.
7. Threaded Ends: Comply with ASME B1.20.1.
8. Maximum Length: 72 inches

B. Quick-Disconnect Devices: Comply with ANSI Z21.41.

1. Copper-alloy convenience outlet and matching plug connector.
2. Nitrile seals.
3. Hand operated with automatic shutoff when disconnected.
4. For indoor or outdoor applications.
5. Adjustable, retractable restraining cable.

C. Y-Pattern Strainers:

1. Body: ASTM A 126, Class B, cast iron with bolted cover and bottom drain connection.
2. End Connections: Threaded ends for NPS 2 and smaller.
3. Strainer Screen: 40-mesh startup strainer, and perforated stainless-steel basket with 50 percent free area.
4. CWP Rating: 125 psig.

D. Weatherproof Vent Cap: Cast- or malleable-iron increaser fitting with corrosion-resistant wire screen, with free area at least equal to cross-sectional area of connecting pipe and threaded-end connection.

2.3 JOINING MATERIALS

A. Joint Compound and Tape: Suitable for natural gas.

B. Welding Filler Metals: Comply with AWS D10.12/D10.12M for welding materials appropriate for wall thickness and chemical analysis of steel pipe being welded.

C. Brazing Filler Metals: Alloy with melting point greater than 1000 deg F complying with AWS A5.8/A5.8M. Brazing alloys containing more than 0.05 percent phosphorus are prohibited.

2.4 MANUAL GAS SHUTOFF VALVES

A. See "Underground Manual Gas Shutoff Valve Schedule" and "Aboveground Manual Gas Shutoff Valve Schedule" Articles for where each valve type is applied in various services.

B. General Requirements for Metallic Valves, NPS 2 and Smaller: Comply with ASME B16.33.

1. CWP Rating: 125 psig.
2. Threaded Ends: Comply with ASME B1.20.1.

3. Dryseal Threads on Flare Ends: Comply with ASME B1.20.3.
4. Tamperproof Feature: Locking feature for valves indicated in "Underground Manual Gas Shutoff Valve Schedule" and "Aboveground Manual Gas Shutoff Valve Schedule" Articles.
5. Listing: Listed and labeled by an NRTL acceptable to authorities having jurisdiction for valves 1 inch and smaller.
6. Service Mark: Valves 1-1/4 inches to NPS 2 shall have initials "WOG" permanently marked on valve body.

C. One-Piece, Bronze Ball Valve with Bronze Trim: MSS SP-110.

1. Manufacturers: Subject to compliance with requirements, available manufacturers offering products that may be incorporated into the Work include, but are not limited to, the following:

    a. BrassCraft Manufacturing Company; a Masco company.
    b. Conbraco Industries, Inc.; Apollo Div.
    c. Lyall, R. W. & Company, Inc.
    d. McDonald, A. Y. Mfg. Co.
    e. Perfection Corporation; a subsidiary of American Meter Company.

2. Body: Bronze, complying with ASTM B 584.
3. Ball: Chrome-plated brass.
4. Stem: Bronze; blowout proof.
5. Seats: Reinforced TFE; blowout proof.
6. Packing: Separate packnut with adjustable-stem packing threaded ends.
7. Ends: Threaded, flared, or socket as indicated in "Underground Manual Gas Shutoff Valve Schedule" and "Aboveground Manual Gas Shutoff Valve Schedule" Articles.
8. CWP Rating: 600 psig.
9. Listing: Valves NPS 1 and smaller shall be listed and labeled by an NRTL acceptable to authorities having jurisdiction.
10. Service: Suitable for natural-gas service with "WOG" indicated on valve body.

D. Two-Piece, Full-Port, Bronze Ball Valves with Bronze Trim: MSS SP-110.

1. Manufacturers: Subject to compliance with requirements, available manufacturers offering products that may be incorporated into the Work include, but are not limited to, the following:

    a. BrassCraft Manufacturing Company; a Masco company.
    b. Conbraco Industries, Inc.; Apollo Div.
    c. Lyall, R. W. & Company, Inc.
    d. McDonald, A. Y. Mfg. Co.
    e. Perfection Corporation; a subsidiary of American Meter Company.

2. Body: Bronze, complying with ASTM B 584.
3. Ball: Chrome-plated bronze.
4. Stem: Bronze; blowout proof.
5. Seats: Reinforced TFE; blowout proof.
6. Packing: Threaded-body packnut design with adjustable-stem packing.
7. Ends: Threaded, flared, or socket as indicated in "Underground Manual Gas Shutoff Valve Schedule" and "Aboveground Manual Gas Shutoff Valve Schedule" Articles.
8. CWP Rating: 600 psig.
9. Listing: Valves NPS 1 and smaller shall be listed and labeled by an NRTL acceptable to authorities having jurisdiction.
10. Service: Suitable for natural-gas service with "WOG" indicated on valve body.

E. Bronze Plug Valves: MSS SP-78.

1. Manufacturers: Subject to compliance with requirements, available manufacturers offering products that may be incorporated into the Work include, but are not limited to, the following:

   a. Lee Brass Company.
   b. McDonald, A. Y. Mfg. Co.

2. Body: Bronze, complying with ASTM B 584.
3. Plug: Bronze.
4. Ends: Threaded, socket, as indicated in "Underground Manual Gas Shutoff Valve Schedule" and "Aboveground Manual Gas Shutoff Valve Schedule" Articles.
5. Operator: Square head or lug type with tamperproof feature where indicated.
6. Pressure Class: 125 psig.
7. Listing: Valves NPS 1 and smaller shall be listed and labeled by an NRTL acceptable to authorities having jurisdiction.
8. Service: Suitable for natural-gas service with "WOG" indicated on valve body.

F. PE Ball Valves: Comply with ASME B16.40.

1. Manufacturers: Subject to compliance with requirements, available manufacturers offering products that may be incorporated into the Work include, but are not limited to, the following:

   a. Kerotest Manufacturing Corp.
   b. Lyall, R. W. & Company, Inc.
   c. Perfection Corporation; a subsidiary of American Meter Company.

2. Body: PE.
3. Ball: PE.
4. Stem: Acetal.
5. Seats and Seals: Nitrile.
6. Ends: Plain or fusible to match piping.
7. CWP Rating: 80 psig.
8. Operating Temperature: Minus 20 to plus 140 deg F.
9. Operator: Nut or flat head for key operation.
10. Include plastic valve extension.
11. Include tamperproof locking feature for valves where indicated on Drawings.

G. Valve Boxes:

1. Cast-iron, two-section box.
2. Top section with cover with "GAS" lettering.
3. Bottom section with base to fit over valve and barrel a minimum of 5 inches in diameter.
4. Adjustable cast-iron extensions of length required for depth of bury.
5. Include tee-handle, steel operating wrench with socket end fitting valve nut or flat head, and with stem of length required to operate valve.

2.5 PRESSURE REGULATORS

A. General Requirements:

1. Single stage and suitable for natural gas.
2. Steel jacket and corrosion-resistant components.
3. Elevation compensator.

4. End Connections: Threaded for regulators NPS 2 and smaller.

B. Line Pressure Regulators: Comply with ANSI Z21.80.

1. Manufacturers: Subject to compliance with requirements, available manufacturers offering products that may be incorporated into the Work include, but are not limited to, the following:

a. Actaris.
b. American Meter Company.
c. Eclipse Combustion, Inc.
d. Fisher Control Valves and Regulators; Division of Emerson Process Management.
e. Invensys.
f. Maxitrol Company.
g. Richards Industries; Jordan Valve Div.

2. Body and Diaphragm Case: Cast iron or die-cast aluminum.
3. Springs: Zinc-plated steel; interchangeable.
4. Diaphragm Plate: Zinc-plated steel.
5. Seat Disc: Nitrile rubber resistant to gas impurities, abrasion, and deformation at the valve port.
6. Orifice: Aluminum; interchangeable.
7. Seal Plug: Ultraviolet-stabilized, mineral-filled nylon.
8. Single-port, self-contained regulator with orifice no larger than required at maximum pressure inlet, and no pressure sensing piping external to the regulator.
9. Pressure regulator shall maintain discharge pressure setting downstream, and not exceed 150 percent of design discharge pressure at shutoff.
10. Overpressure Protection Device: Factory mounted on pressure regulator.
11. Atmospheric Vent: Factory- or field-installed, stainless-steel screen in opening if not connected to vent piping.

C. Appliance Pressure Regulators: Comply with ANSI Z21.18.

1. Manufacturers: Subject to compliance with requirements, available manufacturers offering products that may be incorporated into the Work include, but are not limited to, the following:

a. Canadian Meter Company Inc.
b. Eaton Corporation; Controls Div.
c. Harper Wyman Co.
d. Maxitrol Company.
e. SCP, Inc.

2. Body and Diaphragm Case: Die-cast aluminum.
3. Springs: Zinc-plated steel; interchangeable.
4. Diaphragm Plate: Zinc-plated steel.
5. Seat Disc: Nitrile rubber.
6. Seal Plug: Ultraviolet-stabilized, mineral-filled nylon.
7. Factory-Applied Finish: Minimum three-layer polyester and polyurethane paint finish.
8. Regulator may include vent limiting device, instead of vent connection, if approved by authorities having jurisdiction.

2.6 DIELECTRIC UNIONS

A. Dielectric Unions:

1. Manufacturers: Subject to compliance with requirements, available manufacturers offering products that may be incorporated into the Work include, but are not limited to, the following:

    a. Capitol Manufacturing Company.
    b. Central Plastics Company.
    c. Hart Industries International, Inc.
    d. Jomar International Ltd.
    e. Matco-Norca, Inc.
    f. McDonald, A. Y. Mfg. Co.
    g. Watts Regulator Co.; a division of Watts Water Technologies, Inc.
    h. Wilkins; a Zurn company.

2. Description:

    a. Standard: ASSE 1079.
    b. Pressure Rating: 125 psig minimum at 180 deg F.
    c. End Connections: Solder-joint copper alloy and threaded ferrous.

2.7 LABELING AND IDENTIFYING

A. Detectable Warning Tape: Acid- and alkali-resistant, PE film warning tape manufactured for marking and identifying underground utilities, a minimum of 6 inches wide and 4 mils thick, continuously inscribed with a description of utility, with metallic core encased in a protective jacket for corrosion protection, detectable by metal detector when tape is buried up to 30 inches deep; colored yellow.

PART 3 - EXECUTION

3.1 OUTDOOR PIPING INSTALLATION

A. Comply with the International Fuel Gas Code for installation and purging of natural-gas piping.

B. Install underground, natural-gas piping buried at least 36 inches below finished grade. Comply with requirements in Section 31 2000 "Earth Moving" for excavating, trenching, and backfilling.

1. If natural-gas piping is installed less than 36 inches below finished grade, install it in containment conduit.

C. Install underground, PE, natural-gas piping according to ASTM D 2774.

D. Steel Piping with Protective Coating:

1. Apply joint cover kits to pipe after joining to cover, seal, and protect joints.
2. Repair damage to PE coating on pipe as recommended in writing by protective coating manufacturer.
3. Replace pipe having damaged PE coating with new pipe.

E. Install fittings for changes in direction and branch connections.

F. Install pressure gage downstream from each service regulator. Pressure gages are specified in Section 23 0519 "Meters and Gages for HVAC Piping."

3.2 INDOOR PIPING INSTALLATION

A. Comply with the International Fuel Gas Code for installation and purging of natural-gas piping.

B. Drawing plans, schematics, and diagrams indicate general location and arrangement of piping systems. Indicated locations and arrangements are used to size pipe and calculate friction loss, expansion, and other design considerations. Install piping as indicated unless deviations to layout are approved on Coordination Drawings.

C. Arrange for pipe spaces, chases, slots, sleeves, and openings in building structure during progress of construction, to allow for mechanical installations.

D. Install piping in concealed locations unless otherwise indicated and except in equipment rooms and service areas.

E. Install piping indicated to be exposed and piping in equipment rooms and service areas at right angles or parallel to building walls. Diagonal runs are prohibited unless specifically indicated otherwise.

F. Install piping above accessible ceilings to allow sufficient space for ceiling panel removal.

G. Locate valves for easy access.

H. Install natural-gas piping at uniform grade of 2 percent down toward drip and sediment traps.

I. Install piping free of sags and bends.

J. Install fittings for changes in direction and branch connections.

K. Verify final equipment locations for roughing-in.

L. Comply with requirements in Sections specifying gas-fired appliances and equipment for roughing-in requirements.

M. Drips and Sediment Traps: Install drips at points where condensate may collect, including service-meter outlets. Locate where accessible to permit cleaning and emptying. Do not install where condensate is subject to freezing.

1. Construct drips and sediment traps using tee fitting with bottom outlet plugged or capped. Use nipple a minimum length of 3 pipe diameters, but not less than 3 inches long and same size as connected pipe. Install with space below bottom of drip to remove plug or cap.

N. Extend relief vent connections for service regulators, line regulators, and overpressure protection devices to outdoors and terminate with weatherproof vent cap.

O. Conceal pipe installations in walls, pipe spaces, utility spaces, above ceilings, below grade or floors, and in floor channels unless indicated to be exposed to view.

P. Use eccentric reducer fittings to make reductions in pipe sizes. Install fittings with level side down.

Q. Connect branch piping from top or side of horizontal piping.

R. Install unions in pipes NPS 2 and smaller, adjacent to each valve, at final connection to each piece of equipment.

S. Do not use natural-gas piping as grounding electrode.

T. Install strainer on inlet of each line-pressure regulator and automatic or electrically operated valve.

U. Install pressure gage downstream from each line regulator. Pressure gages are specified in Section 22 0519 "Meters and Gages for Plumbing Piping."

V. Install sleeves for piping penetrations of walls, ceilings, and floors. Comply with requirements for sleeves specified in Section 22 0517 "Sleeves and Sleeve Seals for Plumbing Piping."

W. Install sleeve seals for piping penetrations of concrete walls and slabs. Comply with requirements for sleeve seals specified in Section 22 0517 "Sleeves and Sleeve Seals for Plumbing Piping."

X. Install escutcheons for piping penetrations of walls, ceilings, and floors.

3.3 VALVE INSTALLATION

A. Install manual gas shutoff valve for each gas appliance ahead of corrugated stainless-steel tubing or copper connector.

B. Install underground valves with valve boxes.

C. Install regulators and overpressure protection devices with maintenance access space adequate for servicing and testing.

D. Install earthquake valves aboveground outside buildings according to listing.

E. Install anode for metallic valves in underground PE piping.

3.4 PIPING JOINT CONSTRUCTION

A. Ream ends of pipes and tubes and remove burrs.

B. Remove scale, slag, dirt, and debris from inside and outside of pipe and fittings before assembly.

C. Threaded Joints:

1. Thread pipe with tapered pipe threads complying with ASME B1.20.1.
2. Cut threads full and clean using sharp dies.
3. Ream threaded pipe ends to remove burrs and restore full inside diameter of pipe.
4. Apply appropriate tape or thread compound to external pipe threads unless dryseal threading is specified.
5. Damaged Threads: Do not use pipe or pipe fittings with threads that are corroded or damaged. Do not use pipe sections that have cracked or open welds.

D. Welded Joints:

1. Construct joints according to AWS D10.12/D10.12M, using qualified processes and welding operators.

2. Bevel plain ends of steel pipe.
3. Patch factory-applied protective coating as recommended by manufacturer at field welds and where damage to coating occurs during construction.

E. Brazed Joints: Construct joints according to AWS's "Brazing Handbook," "Pipe and Tube" Chapter.

F. Flared Joints: Cut tubing with roll cutting tool. Flare tube end with tool to result in flare dimensions complying with SAE J513. Tighten finger tight, then use wrench. Do not overtighten.

G. PE Piping Heat-Fusion Joints: Clean and dry joining surfaces by wiping with clean cloth or paper towels. Join according to ASTM D 2657.

1. Plain-End Pipe and Fittings: Use butt fusion.
2. Plain-End Pipe and Socket Fittings: Use socket fusion.

3.5 HANGER AND SUPPORT INSTALLATION

A. Comply with requirements for pipe hangers and supports specified in Section 22 0529 "Hangers and Supports for Plumbing Piping and Equipment."

B. Install hangers for horizontal steel piping with the following maximum spacing and minimum rod sizes:

1. NPS 1 and Smaller: Maximum span, 96 inches; minimum rod size, 3/8 inch.
2. NPS 1-1/4: Maximum span, 108 inches; minimum rod size, 3/8 inch.
3. NPS 1-1/2 and NPS 2: Maximum span, 108 inches; minimum rod size, 3/8 inch.

C. Install hangers for horizontal, corrugated stainless-steel tubing with the following maximum spacing and minimum rod sizes:

1. NPS 3/8: Maximum span, 48 inches; minimum rod size, 3/8 inch.
2. NPS 1/2: Maximum span, 72 inches; minimum rod size, 3/8 inch.
3. NPS 3/4 and Larger: Maximum span, 96 inches; minimum rod size, 3/8 inch.

3.6 CONNECTIONS

A. Connect to utility's gas main according to utility's procedures and requirements.

B. Install natural-gas piping electrically continuous and bonded to gas appliance equipment grounding conductor of the circuit powering the appliance according to NFPA 70.

C. Install piping adjacent to appliances to allow service and maintenance of appliances.

D. Connect piping to appliances using manual gas shutoff valves and unions. Install valve within 72 inches of each gas-fired appliance and equipment. Install union between valve and appliances or equipment.

E. Sediment Traps: Install tee fitting with capped nipple in bottom to form drip, as close as practical to inlet of each appliance.

3.7 LABELING AND IDENTIFYING

A. Comply with requirements in Section 22 0553 "Identification for Plumbing Piping and Equipment" for piping and valve identification.

B. Install detectable warning tape directly above gas piping, 12 inches below finished grade, except 6 inches below subgrade under pavements and slabs.

3.8 FIELD QUALITY CONTROL

A. Test, inspect, and purge natural gas according to the International Fuel Gas Code and authorities having jurisdiction.

B. Natural-gas piping will be considered defective if it does not pass tests and inspections.

C. Prepare test and inspection reports.

3.9 PAINTING

A. Comply with requirements in Section 09 9113 "Exterior Painting" and Section 09 9123 "Interior Painting" for painting interior and exterior natural-gas piping.

B. Paint exposed, exterior metal piping, valves, service regulators, service meters and meter bars, earthquake valves, and piping specialties, except components, with factory-applied paint or protective coating.

1. Alkyd System: MPI EXT 5.1D.

    a. Prime Coat: Alkyd anticorrosive metal primer.
    b. Intermediate Coat: Exterior alkyd enamel matching topcoat.
    c. Topcoat: Exterior alkyd enamel (flat).
    d. Color: Gray.

C. Damage and Touchup: Repair marred and damaged factory-applied finishes with materials and by procedures to match original factory finish.

3.10 OUTDOOR PIPING SCHEDULE

A. Underground natural-gas piping shall be one of the following:

1. See piping schedule on drawings.

2. PE pipe and fittings joined by heat fusion; service-line risers with tracer wire terminated in an accessible location.
3. Coat pipe and fittings with protective coating for steel piping.

B. Aboveground natural-gas piping shall be one of the following:

1. Steel pipe with malleable-iron fittings and threaded joints.
2. Steel pipe with wrought-steel fittings and welded joints.

C. Containment Conduit: Steel pipe with wrought-steel fittings and welded joints. Coat pipe and fittings with protective coating for steel piping.

3.11 INDOOR PIPING SCHEDULE

A. See piping schedule on drawings.

3.12 UNDERGROUND MANUAL GAS SHUTOFF VALVE SCHEDULE

A. Connections to Existing Gas Piping: Use valve and fitting assemblies made for tapping utility's gas mains and listed by an NRTL.

B. Underground: PE valves.

3.13 ABOVEGROUND MANUAL GAS SHUTOFF VALVE SCHEDULE

A. Valves for pipe sizes NPS 2 and smaller at service meter shall be one of the following:

1. One-piece, bronze ball valve with bronze trim.
2. Two-piece, full-port, bronze ball valves with bronze trim.
3. Bronze plug valve.

B. Distribution piping valves for pipe sizes NPS 2 and smaller shall be one of the following:

1. One-piece, bronze ball valve with bronze trim.
2. Two-piece, full-port, bronze ball valves with bronze trim.
3. Bronze plug valve.

C. Valves in branch piping for single appliance shall be one of the following:

1. One-piece, bronze ball valve with bronze trim.
2. Two-piece, full-port, bronze ball valves with bronze trim.
3. Bronze plug valve.

END OF SECTION

SECTION 22 3400

FUEL-FIRED, DOMESTIC-WATER HEATERS

PART 1 - GENERAL

1.1 RELATED DOCUMENTS

A. Drawings and general provisions of the Contract, including General and Supplementary Conditions and Division 01 Specification Sections, apply to this Section.

1.2 SUMMARY

A. Section Includes:

1. Commercial, atmospheric, gas-fired, storage, domestic-water heaters.
2. Commercial, power-burner, gas-fired, storage, domestic-water heaters.
3. Commercial, power-vent, gas-fired, storage, domestic-water heaters.
4. Commercial, gas-fired, high-efficiency, storage, domestic-water heaters.
5. Commercial, coil-type, finned-tube, gas-fired, domestic-water heaters.
6. Commercial, grid-type, finned-tube, gas-fired, domestic-water heaters.
7. Gas-fired, tankless, domestic-water heaters.
8. Residential, atmospheric, gas-fired, storage, domestic-water heaters.
9. Residential, direct-vent, gas-fired, storage, domestic-water heaters.
10. Residential, power-vent, gas-fired, storage, domestic-water heaters.
11. Commercial, oil-fired, storage, domestic-water heaters.
12. Commercial, large-volume, oil-fired, domestic-water heaters.
13. Residential, oil-fired, storage, domestic-water heaters.
14. Commercial, gas- and oil-fired, domestic-water heaters.
15. Domestic-water heater accessories.

1.3 PERFORMANCE REQUIREMENTS

A. Seismic Performance: Commercial domestic-water heaters shall withstand the effects of earthquake motions determined according to ASCE/SEI 7.

1. The term "withstand" means "the unit will remain in place without separation of any parts from the device when subjected to the seismic forces specified and the unit will be fully operational after the seismic event."

1.4 ACTION SUBMITTALS

A. Product Data: For each type and size of domestic-water heater indicated. Include rated capacities, operating characteristics, electrical characteristics, and furnished specialties and accessories.

B. Sustainable Design Submittals:

C. Shop Drawings:

1. Wiring Diagrams: For power, signal, and control wiring.

1.5 INFORMATIONAL SUBMITTALS

A. Seismic Qualification Certificates: For fuel-fired, domestic-water heaters, accessories, and components, from manufacturer.

1. Basis for Certification: Indicate whether withstand certification is based on actual test of assembled components or on calculation.
2. Dimensioned Outline Drawings of Equipment Unit: Identify center of gravity and locate and describe mounting and anchorage provisions.
3. Detailed description of equipment anchorage devices on which the certification is based and their installation requirements.

B. Product Certificates: For each type of equipment domestic-water heater, from manufacturer.

C. Domestic-Water Heater Labeling: Certified and labeled by testing agency acceptable to authorities having jurisdiction.

D. Source quality-control reports.

E. Field quality-control reports.

F. Warranty: Sample of special warranty.

1.6 CLOSEOUT SUBMITTALS

A. Operation and Maintenance Data: For fuel-fired, domestic-water heaters to include in emergency, operation, and maintenance manuals.

1.7 QUALITY ASSURANCE

A. Electrical Components, Devices, and Accessories: Listed and labeled as defined in NFPA 70, by a qualified testing agency, and marked for intended location and application.

B. ASHRAE/IESNA Compliance: Fabricate and label fuel-fired, domestic-water heaters to comply with ASHRAE/IESNA 90.1.

C. ASME Compliance:

1. Where ASME-code construction is indicated, fabricate and label commercial, domestic-water heater storage tanks to comply with ASME Boiler and Pressure Vessel Code: Section VIII, Division 1.
2. Where ASME-code construction is indicated, fabricate and label commercial, finned-tube, domestic-water heaters to comply with ASME Boiler and Pressure Vessel Code: Section IV.

D. NSF Compliance: Fabricate and label equipment components that will be in contact with potable water to comply with NSF 61 Annex G, "Drinking Water System Components - Health Effects."

1.8 COORDINATION

A. Coordinate sizes and locations of concrete bases with actual equipment provided.

1.9 WARRANTY

A. Special Warranty: Manufacturer's standard form in which manufacturer agrees to repair or replace components of fuel-fired, domestic-water heaters that fail in materials or workmanship within specified warranty period.

1. Failures include, but are not limited to, the following:

a. Structural failures including storage tank and supports.
b. Faulty operation of controls.
c. Deterioration of metals, metal finishes, and other materials beyond normal use.

2. Warranty Periods: From date of Substantial Completion.

a. Commercial, Gas-Fired, Storage, Domestic-Water Heaters:

1) Storage Tank: Five years.
2) Controls and Other Components: Two year(s).

b. Commercial, Finned-Tube, Gas-Fired, Domestic-Water Heaters:

1) Heat Exchanger: Five years.
2) Controls and Other Components: Two year(s).
3) Separate Hot-Water Storage Tanks: Five years.

c. Gas-Fired, Tankless, Domestic-Water Heaters:

1) Heat Exchanger: Five years.
2) Controls and Other Components: Three years.

d. Residential, Gas-Fired, Storage, Domestic-Water Heaters:

1) Storage Tank: Five years.
2) Controls and Other Components: One years.

e. Commercial, Oil-Fired, Domestic-Water Heaters:

1) Storage Tank: Five years.
2) Burner: Two year(s).
3) Controls and Other Components: Two Three year(s).

f. Residential, Oil-Fired, Storage, Domestic-Water Heaters:

1) Storage Tank: Five years.
2) Burner: One year(s).
3) Controls and Other Components: One years.

g. Commercial, Gas- and Oil-Fired, Domestic-Water Heaters:

1) Storage Tank: Five years.

2) Burner: Two year(s).
3) Controls and Other Components: Two years.

h. Compression Tanks: Five years.

PART 2 - PRODUCTS

2.1 The equipment descriptions listed in the section may not all be used on this project. Refer to the Equipment Schedules on the drawings for the specific application for each product or material. Products not shown on the schedule for the specific application may not be substituted without pre-approval from the Engineer. Where there is a conflict between the drawing schedules and specifications, the drawing schedules shall take precedent.

2.2 DOMESTIC-WATER HEATER ACCESSORIES

A. Drain Pans: Corrosion-resistant metal with raised edge. Comply with ANSI/CSA LC 3. Include dimensions not less than base of domestic-water heater and include drain outlet not less than NPS 3/4 with ASME B1.20.1 pipe threads or with ASME B1.20.7 garden-hose threads.

B. Piping-Type Heat Traps: Field-fabricated piping arrangement according to ASHRAE/IESNA 90.1 or ASHRAE 90.2.

C. Heat-Trap Fittings: ASHRAE 90.2.

D. Manifold Kits: Domestic-water heater manufacturer's factory-fabricated inlet and outlet piping for field installation, for multiple domestic-water heater installation. Include ball-, butterfly-, or gate-type shutoff valves to isolate each domestic-water heater and calibrated balancing valves to provide balanced flow through each domestic-water heater.

E. Gas Shutoff Valves: ANSI Z21.15/CSA 9.1-M, manually operated. Furnish for installation in piping.

F. Gas Pressure Regulators: ANSI Z21.18/CSA 6.3, appliance type. Include pressure rating as required to match gas supply.

G. Automatic Gas Valves: ANSI Z21.21/CSA 6.5, appliance, electrically operated, on-off automatic valve.

H. Combination Temperature-and-Pressure Relief Valves: Include relieving capacity at least as great as heat input, and include pressure setting less than domestic-water heater working-pressure rating. Select relief valves with sensing element that extends into storage tank.

1. Gas-Fired, Domestic-Water Heaters: ANSI Z21.22/CSA 4.4-M.
2. Oil-Fired, Domestic-Water Heaters: ASME rated and stamped.

I. Pressure Relief Valves: Include pressure setting less than domestic-water heater working-pressure rating.

1. Gas-Fired, Domestic-Water Heaters: ANSI Z21.22/CSA 4.4-M.
2. Oil-Fired, Domestic-Water Heaters: ASME rated and stamped.

J. Vacuum Relief Valves: ANSI Z21.22/CSA 4.4-M.

K. Domestic-Water Heater Stands: Manufacturer's factory-fabricated steel stand for floor mounting, capable of supporting domestic-water heater and water. Provide dimension that will support bottom of domestic-water heater a minimum of 18 inches (457 mm) above the floor.

L. Domestic-Water Heater Mounting Brackets: Manufacturer's factory-fabricated steel bracket for wall mounting, capable of supporting domestic-water heater and water.

2.3 SOURCE QUALITY CONTROL

A. Factory Tests: Test and inspect assembled domestic-water heaters and storage tanks specified to be ASME-code construction, according to ASME Boiler and Pressure Vessel Code.

B. Hydrostatically test commercial domestic-water heaters and storage tanks to minimum of one and one-half times pressure rating before shipment.

C. Domestic-water heaters will be considered defective if they do not pass tests and inspections. Comply with requirements in Section 01 4000 "Quality Requirements" for retesting and reinspecting requirements and Section 01 7300 "Execution" for requirements for correcting the Work.

D. Prepare test and inspection reports.

PART 3 - EXECUTION

3.1 DOMESTIC-WATER HEATER INSTALLATION

A. Commercial, Domestic-Water Heater Mounting: Install commercial domestic-water heaters on concrete base. Comply with requirements for concrete base specified in Section 03 3000 "Cast-in-Place Concrete."

1. Exception: Omit concrete bases for commercial domestic-water heaters if installation on stand, bracket, suspended platform, or directly on floor is indicated.
2. Maintain manufacturer's recommended clearances.
3. Arrange units so controls and devices that require servicing are accessible.
4. Install dowel rods to connect concrete base to concrete floor. Unless otherwise indicated, install dowel rods on 18-inch (450-mm) centers around the full perimeter of concrete base.
5. For supported equipment, install epoxy-coated anchor bolts that extend through concrete base and anchor into structural concrete floor.
6. Place and secure anchorage devices. Use setting drawings, templates, diagrams, instructions, and directions furnished with items to be embedded.
7. Install anchor bolts to elevations required for proper attachment to supported equipment.
8. Anchor domestic-water heaters to substrate.

B. Residential, Domestic-Water Heater Mounting: Install residential domestic-water heaters on water-heater stand on floor or domestic-water heater mounting bracket as indicated on plans.

1. Maintain manufacturer's recommended clearances.
2. Arrange units so controls and devices that require servicing are accessible.

3. Place and secure anchorage devices. Use setting drawings, templates, diagrams, instructions, and directions furnished with items to be embedded.
4. Install anchor bolts to elevations required for proper attachment to supported equipment.
5. Anchor domestic-water heaters to substrate.

C. Tankless, Domestic-Water Heater Mounting: Install tankless, domestic-water heaters at least 18 inches, or as indicated on plans, above floor on wall bracket.

1. Maintain manufacturer's recommended clearances.
2. Arrange units so controls and devices that require servicing are accessible.
3. Place and secure anchorage devices. Use setting drawings, templates, diagrams, instructions, and directions furnished with items to be embedded.
4. Install anchor bolts to elevations required for proper attachment to supported equipment.
5. Anchor domestic-water heaters to substrate.

D. Install domestic-water heaters level and plumb, according to layout drawings, original design, and referenced standards. Maintain manufacturer's recommended clearances. Arrange units so controls and devices needing service are accessible.

1. Install shutoff valves on domestic-water-supply piping to domestic-water heaters and on domestic-hot-water outlet piping. Comply with requirements for shutoff valves specified in Section 22 0523.12 "Ball Valves for Plumbing Piping," Section 22 0523.13 "Butterfly Valves for Plumbing Piping," and Section 22 0523.15 "Gate Valves for Plumbing Piping."

E. Install gas-fired, domestic-water heaters according to NFPA 54.

1. Install gas shutoff valves on gas supply piping to gas-fired, domestic-water heaters without shutoff valves.
2. Install gas pressure regulators on gas supplies to gas-fired, domestic-water heaters without gas pressure regulators if gas pressure regulators are required to reduce gas pressure at burner.
3. Install automatic gas valves on gas supplies to gas-fired, domestic-water heaters if required for operation of safety control.
4. Comply with requirements for gas shutoff valves, gas pressure regulators, and automatic gas valves specified in Section 23 1123 "Facility Natural-Gas Piping." or Section 23 1126 "Facility Liquefied-Petroleum Gas Piping."

F. Install oil-fired, domestic-water heaters according to NFPA 31.

1. Install shutoff valves on fuel-oil supply piping to oil-fired water-heater burners without shutoff valves. Comply with requirements for shutoff valves specified in Section 23 1113 "Facility Fuel-Oil Piping."

G. Install commercial domestic-water heaters with seismic-restraint devices. Comply with requirements for seismic-restraint devices specified in Section 22 0548 "Vibration and Seismic Controls for Plumbing Piping and Equipment."

H. Install combination temperature-and-pressure relief valves in top portion of storage tanks. Use relief valves with sensing elements that extend into tanks. Extend commercial-water-heater relief-valve outlet, with drain piping same as domestic-water piping in continuous downward pitch, and discharge by positive air gap onto closest floor drain.

I. Install combination temperature-and-pressure relief valves in water piping for domestic-water heaters without storage. Extend commercial-water-heater relief-valve outlet, with drain piping

same as domestic-water piping in continuous downward pitch, and discharge by positive air gap onto closest floor drain.

J. Install water-heater drain piping as indirect waste to spill by positive air gap into open drains or over floor drains. Install hose-end drain valves at low points in water piping for domestic-water heaters that do not have tank drains. Comply with requirements for hose-end drain valves specified in Section 22 1119 "Domestic Water Piping Specialties."

K. Install thermometer on outlet piping of domestic-water heaters. Comply with requirements for thermometers specified in Section 22 0519 "Meters and Gages for Plumbing Piping."

L. Assemble and install inlet and outlet piping manifold kits for multiple domestic-water heaters. Fabricate, modify, or arrange manifolds for balanced water flow through each domestic-water heater. Include shutoff valve and thermometer in each domestic-water heater inlet and outlet, and throttling valve in each domestic-water heater outlet. Comply with requirements for valves specified in Section 22 0523.12 "Ball Valves for Plumbing Piping," Section 22 0523.13 "Butterfly Valves for Plumbing Piping," and Section 22 0523.15 "Gate Valves for Plumbing Piping," and comply with requirements for thermometers specified in Section 22 0519 "Meters and Gages for Plumbing Piping."

M. Install piping-type heat traps on inlet and outlet piping of domestic-water heater storage tanks without integral or fitting-type heat traps.

N. Fill domestic-water heaters with water.

O. Charge domestic-water compression tanks with air.

3.2 CONNECTIONS

A. Comply with requirements for domestic-water piping specified in Section 22 1116 "Domestic Water Piping."

B. Comply with requirements for fuel-oil piping specified in Section 23 1113 "Facility Fuel-Oil Piping."

C. Comply with requirements for gas piping specified in Section 23 1123 "Facility Natural-Gas Piping." Or Section 23 1126 "Facility Liquefied-Petroleum Gas Piping."

D. Drawings indicate general arrangement of piping, fittings, and specialties.

E. Where installing piping adjacent to fuel-fired, domestic-water heaters, allow space for service and maintenance of water heaters. Arrange piping for easy removal of domestic-water heaters.

3.3 IDENTIFICATION

A. Identify system components. Comply with requirements for identification specified in Section 22 0553 "Identification for Plumbing Piping and Equipment."

3.4 FIELD QUALITY CONTROL

A. Perform tests and inspections.

1. Manufacturer's Field Service: Engage a factory-authorized service representative to inspect components, assemblies, and equipment installations, including connections, and to assist in testing.
2. Leak Test: After installation, charge system and test for leaks. Repair leaks and retest until no leaks exist.
3. Operational Test: After electrical circuitry has been energized, start units to confirm proper operation.
4. Test and adjust controls and safeties. Replace damaged and malfunctioning controls and equipment.

B. Domestic-water heaters will be considered defective if they do not pass tests and inspections. Comply with requirements in Section 01 4000 "Quality Requirements" for retesting and reinspecting requirements and Section 01 7300 "Execution" for requirements for correcting the Work.

C. Prepare test and inspection reports.

3.5 DEMONSTRATION

A. Engage a factory-authorized service representative to train Owner's maintenance personnel to adjust, operate, and maintain commercial, gas-fired, storage, gas-fired, tankless, commercial, oil-fired, and commercial, gas- and oil-fired, domestic-water heaters.

END OF SECTION

SECTION 22 4100

PLUMBING FIXTURES

PART 1 - GENERAL

1.1 RELATED DOCUMENTS

A. Drawings and general provisions of the Contract, including General and Supplementary Conditions and Division 01 Specification Sections, apply to this Section.

1.2 SUMMARY

A. Section Includes:

1. Bathtubs.
2. Faucets.
3. Whirlpool baths.
4. Walk-in baths.
5. Bidets.
6. Lavatories.
7. Showers.
8. Bar sinks.
9. Kitchen sinks.
10. Laundry trays.
11. Dishwasher air-gap fittings.
12. Laminar-flow, faucet-spout outlets.
13. Disposers.
14. Hot-water dispensers.
15. Water closets.
16. Toilet seats.
17. Supply fittings.
18. Waste fittings.

1.3 ACTION SUBMITTALS

A. Product Data: For each type of product.

1. Include construction details, material descriptions, dimensions of individual components and profiles, and finishes for lavatories.
2. Include rated capacities, operating characteristics, electrical characteristics, and furnished specialties and accessories.

B. Shop Drawings: Include diagrams for power, signal, and control wiring.

1.4 INFORMATIONAL SUBMITTALS

A. Coordination Drawings: Counter cutout templates for mounting of counter-mounted plumbing fixtures.

B. Sample Warranty: For special warranty.

1.5 CLOSEOUT SUBMITTALS

A. Operation and Maintenance Data: For plumbing fixtures and faucets to include in emergency, operation, and operation and maintenance manuals.

1. In addition to items specified in Section 01 7823 "Operation and Maintenance Data," include the following:

a. Servicing and adjustments of whirlpool and walk-in baths.

1.6 MAINTENANCE MATERIAL SUBMITTALS

A. Furnish extra materials that match products installed and that are packaged with protective covering for storage and identified with labels describing contents.

1. Faucet Washers and O-Rings: Equal to 10 percent of amount of each type and size installed.
2. Faucet Cartridges and O-Rings: Equal to 5 percent of amount of each type and size installed.
3. Flushometer-Tank Repair Kits: Equal to 5 percent of amount of each type installed, but no fewer than two of each type.
4. Toilet Seats: Equal to 5 percent of amount of each type installed, but no fewer than one of each type.

1.7 WARRANTY

A. Special Warranty: Manufacturer agrees to repair or replace components of walk-in baths and whirlpool baths that fail in materials or workmanship within specified warranty period.

1. Failures include, but are not limited to, the following:

a. Structural failures of unit shell.
b. Faulty operation of controls, blowers, pumps, heaters, and timers.
c. Deterioration of metals, metal finishes, and other materials beyond normal use.

2. Warranty Period for Shells: 20 years from date of Substantial Completion.
3. Warranty Period for Pumps and Blowers: Five years from date of Substantial Completion.
4. Warranty Period for Electronic Controls: Five years from date of Substantial Completion.

PART 2 - PRODUCTS

2.1 The product descriptions listed in the section may not all be used on this project. Refer to the Equipment Schedules on the drawings for the specific application for each product or material. Products not shown on the schedule for the specific application may not be substituted without pre-approval from the Engineer. Where there is a conflict between the drawing schedules and specifications, the drawing schedules shall take precedent. See Editing Instruction No. 1 in the Evaluations for cautions about named

manufacturers and products. For an explanation of options and Contractor's product selection procedures, see Section 01 6000 "Product Requirements."

2.2 GROUT

A. Standard: ASTM C 1107/C 1107M, Grade B, post-hardening and volume-adjusting, dry, hydraulic-cement grout.

B. Characteristics: Nonshrink; recommended for interior and exterior applications.

C. Design Mix: 5000-psi, 28-day compressive strength.

D. Packaging: Premixed and factory packaged.

PART 3 - EXECUTION

3.1 EXAMINATION

A. Examine roughing-in of water-supply and sanitary drainage and vent piping systems to verify actual locations of piping connections before plumbing-fixture installation.

B. Examine walls, floors, cabinets, and counters for suitable conditions where fixtures will be installed.

C. Proceed with installation only after unsatisfactory conditions have been corrected.

3.2 INSTALLATION

A. Install plumbing fixtures level and plumb according to roughing-in drawings.

B. Install floor-mounted water closets on closet flange attachments to drainage piping.

C. Install counter-mounting fixtures in and attached to casework.

D. Install pedestal lavatories on pedestals and secured to wood blocking in wall.

E. Install water-supply piping with stop on each supply to each fixture to be connected to water distribution piping. Attach supplies to supports or substrate within pipe spaces behind fixtures. Install stops in locations where they can be easily reached for operation.

1. Exception: Use ball or gate valves if supply stops are not specified with fixture.

F. Install tanks for accessible, tank-type water closets with lever handle mounted on wide side of compartment.

G. Install toilet seats on water closets.

H. Install faucet flow-control fittings with specified flow rates and patterns in faucet spouts if faucets are not available with required rates and patterns. Include adapters if required.

I. Install shower flow-control fittings with specified maximum flow rates in shower arms.

J. Install traps on fixture outlets.

1. Exception: Omit trap on fixtures with integral traps.
2. Exception: Omit trap on indirect wastes unless otherwise indicated.

K. Install disposer in outlet of each sink indicated to have a disposer. Install switch where indicated or in wall adjacent to sink if location is not indicated.

L. Install dishwasher air-gap fitting at each sink indicated to have air-gap fitting. Connect inlet hose to dishwasher and outlet hose to disposer.

M. Install hot-water dispensers in back top surface of sink or in countertop with spout over sink.

N. Set bathtubs and shower receptors in leveling bed of cement grout.

O. Install protective shielding pipe covers and enclosures on exposed supplies and waste piping of accessible lavatories and sink. Comply with requirements in Section 22 0719 "Plumbing Piping Insulation."

P. Install wall flanges or escutcheons at piping wall penetrations in exposed, finished locations. Use deep-pattern escutcheons if required to conceal protruding fittings. Comply with escutcheon requirements specified in Section 22 0518 "Escutcheons for Plumbing Piping."

Q. Seal joints between plumbing fixtures, counters, floors, and walls using sanitary-type, one-part, mildew-resistant silicone sealant. Match sealant color to fixture color. Comply with sealant requirements specified in Section 07 9200 "Joint Sealants."

3.3 CONNECTIONS

A. Connect fixtures with water supplies, stops, and risers, and with traps, soil, waste, and vent piping. Use size fittings required to match fixtures.

B. Comply with water piping requirements specified in Section 22 1116 "Domestic Water Piping."

C. Comply with soil and waste piping requirements specified in Section 22 1316 "Sanitary Waste and Vent Piping."

D. Install protective shielding pipe covers and enclosures on exposed supplies and waste piping of accessible lavatories and sink**s**. Comply with requirements in Section 22 0719 "Plumbing Piping Insulation."

3.4 ADJUSTING

A. Operate and adjust plumbing fixtures and controls. Replace damaged and malfunctioning fixtures, fittings, and controls.

B. Adjust water pressure at faucets to produce proper flow.

3.5 CLEANING AND PROTECTION

A. After completing installation of plumbing fixtures, inspect and repair damaged finishes.

B. Clean plumbing fixtures, faucets, and other fittings with manufacturers' recommended cleaning methods and materials.

C. Provide protective covering for installed plumbing fixtures and fittings.

D. Do not allow use of plumbing fixtures for temporary facilities unless approved in writing by Owner.

END OF SECTION

SECTION 22 4500

EMERGENCY PLUMBING FIXTURES

PART 1 - GENERAL

1.1 RELATED DOCUMENTS

A. Drawings and general provisions of the Contract, including General and Supplementary Conditions and Division 01 Specification Sections, apply to this Section.

1.2 SUMMARY

A. Section Includes:

1. Emergency showers.
2. Eyewash equipment.
3. Eye/face wash equipment.
4. Combination units.
5. Supplemental equipment.
6. Water-tempering equipment.

1.3 DEFINITIONS

A. Accessible Fixture: Emergency plumbing fixture that can be approached, entered, and used by people with disabilities.

B. Plumbed Emergency Plumbing Fixture: Fixture with fixed, potable-water supply.

C. Self-Contained Emergency Plumbing Fixture: Fixture with flushing-fluid-solution supply.

D. Tepid: Moderately warm.

1.4 ACTION SUBMITTALS

A. Product Data: For each type of product indicated. Include flow rates and capacities, furnished specialties, and accessories.

B. Shop Drawings: Diagram power, signal, and control wiring.

1.5 INFORMATIONAL SUBMITTALS

A. Product Certificates: Submit certificates of performance testing specified in "Source Quality Control" Article.

B. Field quality-control test reports.

1.6 CLOSEOUT SUBMITTALS

A. Operation and Maintenance Data: For emergency plumbing fixtures to include in operation and maintenance manuals.

1.7 MAINTENANCE MATERIAL SUBMITTALS

A. Furnish extra materials that match products installed and that are packaged with protective covering for storage and identified with labels describing contents.

1. Flushing-Fluid Solution: Separate lot and equal to at least 200 percent of amount of solution installed for each self-contained unit.

1.8 QUALITY ASSURANCE

A. Electrical Components, Devices, and Accessories: Listed and labeled as defined in NFPA 70, by a qualified testing agency, and marked for intended location and application.

B. ANSI Standard: Comply with ANSI Z358.1, "Emergency Eyewash and Shower Equipment."

C. NSF Standard: Comply with NSF 61 Annex G, "Drinking Water System Components - Health Effects," for fixture materials that will be in contact with potable water.

D. Regulatory Requirements: Comply with requirements in ICC/ANSI A117.1, "Accessible and Usable Buildings and Facilities"; Public Law 90-480, "Architectural Barriers Act"; and Public Law 101-336, "Americans with Disabilities Act"; for plumbing fixtures for people with disabilities.

PART 2 - PRODUCTS

2.1 EMERGENCY SHOWERS

A. Freestanding, Plumbed Emergency Showers,:

1. Manufacturers: Subject to compliance with requirements, provide products by one of the following:

a. Bradley Corporation.
b. Guardian Equipment Co.
c. WaterSaver Faucet Co.

2. Capacity: Not less than 20 gpm for at least 15 minutes.
3. Supply Piping: chrome-plated brass or stainless steel with flow regulator and stay-open control valve.
4. Control-Valve Actuator: Foot treadle.
5. Shower Head: 8-inch-minimum diameter, chrome-plated brass, stainless steel, or plastic.
6. Mounting: Pedestal.

B. Off-Floor, Plumbed Emergency Showers,:

1. Manufacturers: Subject to compliance with requirements, provide products by one of the following:

a. Bradley Corporation.
b. Guardian Equipment Co.
c. Stingray Systems LLC.
d. WaterSaver Faucet Co.

2. Capacity: Not less than 20 gpm for at least 15 minutes.
3. Supply Piping: NPS 1 chrome-plated brass or stainless steel with flow regulator and stay-open control valve.
4. Control-Valve Actuator: Pull rod.
5. Shower Head: 8-inch-minimum diameter, chrome-plated brass, stainless steel, or plastic.
6. Mounting: Horizontal from wall and supported from piping.

C. Freeze-Protected, Plumbed Emergency Showers,:

1. Manufacturers: Subject to compliance with requirements, provide products by one of the following:

a. Bradley Corporation.
b. Guardian Equipment Co.

2. Capacity: Not less than 20 gpm for at least 15 minutes.
3. Supply Piping: NPS 1-1/4 galvanized steel with flow regulator and stay-open control valve.
4. Control-Valve Actuator: Pull rod.
5. Shower Head: 8-inch-minimum diameter, chrome-plated brass, stainless steel, or plastic.
6. Heating System: 120-V ac electric, and insulation with protective jacket.
7. Mounting: Pedestal.

2.2 EYEWASH EQUIPMENT

A. Standard, Freestanding, Plumbed Eyewash Units,:

1. Manufacturers: Subject to compliance with requirements, provide products by one of the following:

a. Bradley Corporation.
b. Guardian Equipment Co.
c. Stingray Systems LLC.
d. WaterSaver Faucet Co.

2. Capacity: Not less than 0.4 gpm for at least 15 minutes.
3. Supply Piping: NPS 1/2 chrome-plated brass or stainless steel with flow regulator and stay-open control valve.
4. Control-Valve Actuator: Treadle.
5. Spray-Head Assembly: Two receptor-mounted spray heads.
6. Receptor: Chrome-plated brass or stainless-steel bowl.
7. Drain Piping: NPS 1-1/4 minimum, chrome-plated brass, receptor drain, P-trap, waste to wall, and wall flange complying with ASME A112.18.2/CSA B125.2.
8. Mounting: Pedestal.

B. Accessible, Freestanding, Plumbed Eyewash Units,:

1. Manufacturers: Subject to compliance with requirements, provide products by one of the following:

a. Bradley Corporation.
b. Guardian Equipment Co.
c. WaterSaver Faucet Co.

2. Capacity: Not less than 0.4 gpm for at least 15 minutes.
3. Supply Piping: NPS 1/2 chrome-plated brass or stainless steel with flow regulator and stay-open control valve.
4. Control-Valve Actuator: Paddle.
5. Spray-Head Assembly: Two receptor-mounted spray heads.
6. Receptor: Chrome-plated brass or stainless-steel bowl.
7. Drain Piping: NPS 1-1/4 minimum, chrome-plated brass, receptor drain, P-trap, waste to wall, and wall flange complying with ASME A112.18.2/CSA B125.2.
8. Mounting: Offset pedestal.
9. Special Construction: Comply with ICC/ANSI A117.1.

C. Standard, Wall-Mounted, Plumbed Eyewash Units,:

1. Manufacturers: Subject to compliance with requirements, provide products by one of the following:

a. Bradley Corporation.
b. Guardian Equipment Co.
c. Stingray Systems LLC.
d. WaterSaver Faucet Co.

2. Capacity: Not less than 0.4 gpm for at least 15 minutes.
3. Supply Piping: NPS 1/2 chrome-plated brass or stainless steel with flow regulator and stay-open control valve.
4. Control-Valve Actuator: Paddle.
5. Spray-Head Assembly: Two receptor-mounted spray heads.
6. Receptor: Chrome-plated brass or stainless-steel bowl.
7. Drain Piping: NPS 1-1/4 minimum, chrome-plated brass, receptor drain, P-trap, waste to wall, and wall flange complying with ASME A112.18.2/CSA B125.2.
8. Mounting: Wall bracket.

D. Accessible, Wall-Mounted, Plumbed Eyewash Units,:

1. Manufacturers: Subject to compliance with requirements, provide products by one of the following:

a. Bradley Corporation.
b. Guardian Equipment Co.

2. Capacity: Not less than 0.4 gpm for at least 15 minutes.
3. Supply Piping: NPS 1/2 chrome-plated brass or stainless steel with flow regulator and stay-open control valve.
4. Control-Valve Actuator: Paddle.
5. Spray-Head Assembly: Two receptor-mounted spray heads.
6. Receptor: Chrome-plated brass or stainless-steel bowl.
7. Drain Piping: NPS 1-1/4 minimum, chrome-plated brass, receptor drain, P-trap, waste to wall, and wall flange complying with ASME A112.18.2/CSA B125.2.
8. Mounting: Wall bracket.
9. Special Construction: Comply with ICC/ANSI A117.1.

E. Sink, Fixed-Position, Plumbed Eyewash Unit, Insert drawing designation:

1. Manufacturers: Subject to compliance with requirements, provide products by one of the following:

    a. Bradley Corporation.
    b. Guardian Equipment Co.
    c. WaterSaver Faucet Co.

2. Capacity: Not less than 0.4 gpm for at least 15 minutes.
3. Supply Piping: NPS 1/2 chrome-plated brass or stainless steel with flow regulator and stay-open control valve.
4. Control-Valve Actuator: Paddle.
5. Spray-Head Assembly: Two spray heads positioned over sink.
6. Mounting: Attached to sink receptor.

F. Sink, Swivel-Type, Plumbed Eyewash Unit,:

1. Manufacturers: Subject to compliance with requirements, provide products by one of the following:

    a. Bradley Corporation.
    b. Guardian Equipment Co.
    c. WaterSaver Faucet Co.

2. Capacity: Not less than 0.4 gpm for at least 15 minutes.
3. Supply Piping: NPS 1/2 chrome-plated brass or stainless steel with flow regulator and stay-open control valve.
4. Control-Valve Actuator: Movement of spray-head assembly to position over sink.
5. Spray-Head Assembly: Two spray heads with offset piping.
6. Mounting: Deck next to sink.

G. Portable, Self-Contained Eyewash Units,:

1. Manufacturers: Subject to compliance with requirements, provide products by one of the following:

    a. Bradley Corporation.
    b. Guardian Equipment Co.
    c. WaterSaver Faucet Co.

2. Capacity: Not less than 0.4 gpm for at least 15 minutes.
3. Pressure Tank: 10 gal., stainless steel, cylindrical, with pressure gage, and suitable for on-floor installation.
4. Flushing Fluid: Medically acceptable solution manufactured and labeled according to applicable regulations.
5. Spray-Head Assembly: Chrome-plated copper alloy or stainless-steel piping with flow regulator; paddle-actuated, stay-open control valve; and two spray heads mounted on tank.
6. Drench Hose: Hand-held spray head with squeeze-handle actuation and hose attached to tank.

H. Standard, Self-Contained Eyewash Units,:

1. Manufacturers: Subject to compliance with requirements, provide products by one of the following:

a. Bradley Corporation.
b. Guardian Equipment Co.
c. WaterSaver Faucet Co.

2. Capacity: Not less than 0.4 gpm for at least 15 minutes.
3. Gravity Tank: 14 gal. minimum, plastic, and suitable for shelf mounting.
4. Flushing Fluid: Medically acceptable solution manufactured and labeled according to applicable regulations.
5. Actuator: Pull-down front panel.
6. Spray Heads: Protected, two mounted on tank.

I. Freeze-Protected, Self-Contained Eyewash Units,:

1. Manufacturers: Subject to compliance with requirements, provide products by one of the following:

a. Bradley Corporation.
b. Guardian Equipment Co.

2. Capacity: Not less than 0.4 gpm for at least 15 minutes.
3. Gravity Tank: 20 gal. minimum, plastic, and suitable for shelf mounting.
4. Flushing Fluid: Medically acceptable solution manufactured and labeled according to applicable regulations.
5. Actuator: Pull-down front panel.
6. Spray Heads: Protected, two mounted on tank.
7. Heating System: Electric, 120-V ac; and insulation with protective jacket.

2.3 EYE/FACE WASH EQUIPMENT

A. Standard, Freestanding, Plumbed, Eye/Face Wash Units,:

1. Manufacturers: Subject to compliance with requirements, provide products by one of the following:

a. Bradley Corporation.
b. Guardian Equipment Co.
c. WaterSaver Faucet Co.

2. Capacity: Not less than 3.0 gpm for at least 15 minutes.
3. Supply Piping: NPS 1/2 chrome-plated brass or stainless steel with flow regulator and stay-open control valve.
4. Control-Valve Actuator: Treadle.
5. Spray-Head Assembly: Two or four receptor-mounted spray heads.
6. Receptor: Chrome-plated brass or stainless-steel bowl.
7. Drain Piping: NPS 1-1/4 minimum, chrome-plated brass, receptor drain, P-trap, waste to wall, and wall flange complying with ASME A112.18.2/CSA B125.2.
8. Mounting: Pedestal.

B. Accessible, Freestanding, Plumbed, Eye/Face Wash Units,:

1. Manufacturers: Subject to compliance with requirements, provide products by one of the following:

a. Bradley Corporation.

b. Guardian Equipment Co.
c. WaterSaver Faucet Co.

2. Capacity: Not less than 3 gpm for at least 15 minutes.
3. Supply Piping: NPS 1/2 chrome-plated brass or stainless steel with flow regulator and stay-open control valve.
4. Control-Valve Actuator: Paddle.
5. Spray-Head Assembly: Two or four receptor-mounted spray heads.
6. Receptor: Chrome-plated brass or stainless-steel bowl.
7. Drain Piping: NPS 1-1/4 minimum, chrome-plated brass, receptor drain, P-trap, waste to wall, and wall flange complying with ASME A112.18.2/CSA B125.2.
8. Mounting: Offset pedestal.
9. Special Construction: Comply with ICC/ANSI A117.1.

C. Standard, Wall-Mounted, Plumbed, Eye/Face Wash Units,:

1. Manufacturers: Subject to compliance with requirements, provide products by one of the following:

a. Bradley Corporation.
b. Guardian Equipment Co.
c. Stingray Systems LLC.
d. WaterSaver Faucet Co.

2. Capacity: Not less than 3.0 gpm for at least 15 minutes.
3. Supply Piping: NPS 1/2 chrome-plated brass or stainless steel with flow regulator and stay-open control valve.
4. Control-Valve Actuator: Paddle.
5. Spray-Head Assembly: Two or four receptor-mounted spray heads.
6. Receptor: Chrome-plated brass or stainless-steel bowl.
7. Drain Piping: NPS 1-1/4 minimum, chrome-plated brass, receptor drain, P-trap, waste to wall, and wall flange complying with ASME A112.18.2/CSA B125.2.
8. Mounting: Wall bracket.

D. Accessible, Wall-Mounted, Plumbed, Eye/Face Wash Units,:

1. Manufacturers: Subject to compliance with requirements, provide products by one of the following:

a. Bradley Corporation.
b. Guardian Equipment Co.
c. WaterSaver Faucet Co.

2. Capacity: Not less than 3.0 gpm for at least 15 minutes.
3. Supply Piping: NPS 1/2 chrome-plated brass or stainless steel with flow regulator and stay-open control valve.
4. Control-Valve Actuator: Paddle.
5. Spray-Head Assembly: Two or four receptor-mounted spray heads.
6. Receptor: Chrome-plated brass or stainless-steel bowl.
7. Mounting: Wall bracket.
8. Special Construction: Comply with ICC/ANSI A117.1.

E. Sink, Fixed-Position, Plumbed, Eye/Face Wash Unit,:

1. Manufacturers: Subject to compliance with requirements, provide products by one of the following:

    a. Bradley Corporation.
    b. Guardian Equipment Co.
    c. WaterSaver Faucet Co.

2. Capacity: Not less than 3 gpm for at least 15 minutes.
3. Supply Piping: NPS 1/2 chrome-plated brass or stainless steel with flow regulator and stay-open control valve.
4. Control-Valve Actuator: Paddle.
5. Spray-Head Assembly: Two or four spray heads positioned over sink.
6. Receptor: Chrome-plated brass or stainless-steel bowl.
7. Mounting: Attached to sink receptor.

2.4 COMBINATION UNITS

A. Standard, Plumbed Emergency Shower with Eyewash Combination Units,:

1. Manufacturers: Subject to compliance with requirements, provide products by one of the following:

    a. Bradley Corporation.
    b. Guardian Equipment Co.
    c. WaterSaver Faucet Co.

2. Piping:

    a. Material: Chrome-plated brass or stainless steel.
    b. Unit Drain: Outlet at back or side near bottom.

3. Shower:

    a. Capacity: Not less than 20 gpm for at least 15 minutes.
    b. Supply Piping: NPS 1 with flow regulator and stay-open control valve.
    c. Control-Valve Actuator: Treadle.
    d. Shower Head: 8-inch-minimum diameter, chrome-plated brass or stainless steel.
    e. Mounting: Pedestal.

4. Eyewash Unit:

    a. Capacity: Not less than 0.4 gpm for at least 15 minutes.
    b. Supply Piping: NPS 1/2 with flow regulator and stay-open control valve.
    c. Control-Valve Actuator: Paddle.
    d. Spray-Head Assembly: Two receptor-mounted spray heads.
    e. Receptor: Chrome-plated brass or stainless-steel bowl.
    f. Mounting: Attached shower pedestal.
    g. Drench-Hose Option: May be provided instead of eyewash unit.

        1) Capacity: Not less than 0.4 gpm for at least 15 minutes.
        2) Drench Hose: Hand-held spray head with squeeze-handle actuator and hose.
        3) Mounting: Bracket on shower pedestal.

B. Accessible, Plumbed Emergency Shower with Eyewash Combination Units,:

1. Manufacturers: Subject to compliance with requirements, provide products by one of the following:

    a. Bradley Corporation.
    b. Guardian Equipment Co.
    c. WaterSaver Faucet Co.

2. Piping:

    a. Material: Chrome-plated brass or stainless steel.
    b. Unit Drain: Outlet at back or side near bottom.

3. Shower:

    a. Capacity: Not less than 20 gpm for at least 15 minutes.
    b. Supply Piping: NPS 1 with flow regulator and stay-open control valve.
    c. Control-Valve Actuator: Pull rod.
    d. Shower Head: 8-inch-minimum diameter, chrome-plated brass or stainless steel.
    e. Mounting: Pedestal.

4. Eyewash Unit:

    a. Capacity: Not less than 0.4 gpm for at least 15 minutes.
    b. Supply Piping: NPS 1/2 with flow regulator and stay-open control valve.
    c. Control-Valve Actuator: Paddle.
    d. Spray-Head Assembly: Two receptor-mounted spray heads.
    e. Receptor: Chrome-plated brass or stainless-steel bowl.
    f. Mounting: Attached shower pedestal.
    g. Drench-Hose Option: May be provided instead of eyewash unit.

        1) Capacity: Not less than 0.4 gpm for at least 15 minutes.
        2) Drench Hose: Hand-held spray head with squeeze-handle actuator and hose.
        3) Mounting: Bracket on shower pedestal.

C. Standard, Plumbed Emergency Shower with Eye/Face Wash Combination Units,:

1. Manufacturers: Subject to compliance with requirements, provide products by one of the following:

    a. Bradley Corporation.
    b. Guardian Equipment Co.
    c. WaterSaver Faucet Co.

2. Piping:

    a. Material: Chrome-plated brass or stainless steel.
    b. Unit Drain: Outlet at back or side near bottom.

3. Shower:

    a. Capacity: Not less than 20 gpm for at least 15 minutes.
    b. Supply Piping: NPS 1 with flow regulator and stay-open control valve.

c. Control-Valve Actuator: Treadle.
d. Shower Head: 8-inch-minimum diameter, chrome-plated brass or stainless steel.
e. Mounting: Pedestal.

4. Eye/Face Wash Unit:

a. Capacity: Not less than 3 gpm for at least 15 minutes.
b. Supply Piping: NPS 1/2 with flow regulator and stay-open control valve.
c. Control-Valve Actuator: Paddle.
d. Spray-Head Assembly: Two or four receptor-mounted spray heads.
e. Receptor: Chrome-plated brass or stainless-steel bowl.
f. Mounting: Attached shower pedestal.
g. Drench-Hose Option: May be provided instead of eye/face wash unit.

1) Capacity: Not less than 3 gpm for at least 15 minutes.
2) Drench Hose: Hand-held spray head with squeeze-handle actuator and hose.
3) Mounting: Bracket on shower pedestal.

D. Accessible, Plumbed Emergency Shower with Eye/Face Wash Combination Units,:

1. Manufacturers: Subject to compliance with requirements, provide products by one of the following:

a. Bradley Corporation.
b. Guardian Equipment Co.
c. WaterSaver Faucet Co.

2. Piping:

a. Material: Chrome-plated brass or stainless steel.
b. Unit Drain: Outlet at back or side near bottom.

3. Shower:

a. Capacity: Not less than 20 gpm for at least 15 minutes.
b. Supply Piping: NPS 1 with flow regulator and stay-open control valve.
c. Control-Valve Actuator: Pull rod.
d. Shower Head: 8-inch-minimum diameter, chrome-plated brass or stainless steel.
e. Mounting: Pedestal.

4. Eye/Face Wash Unit:

a. Capacity: Not less than 3 gpm for at least 15 minutes.
b. Supply Piping: NPS 1/2 with flow regulator and stay-open control valve.
c. Control-Valve Actuator: Paddle.
d. Spray-Head Assembly: Two or four receptor-mounted spray heads.
e. Receptor: Chrome-plated brass or stainless-steel bowl.
f. Mounting: Attached to shower pedestal.
g. Drench-Hose Option: May be provided instead of eye/face wash unit.

1) Capacity: Not less than 3 gpm for at least 15 minutes.
2) Drench Hose: Hand-held spray head with squeeze-handle actuator and hose.
3) Mounting: Bracket on shower pedestal.

E. Freeze-Protected, Plumbed Emergency Shower with Eyewash Combination Units,:

1. Manufacturers: Subject to compliance with requirements, provide products by one of the following:

   a. Bradley Corporation.
   b. Guardian Equipment Co.

2. Piping: Galvanized steel.

   a. Unit Supply from bottom.

3. Heating System: Electric, 120-V ac; and insulation with protective jacket and thermometer.

   a. Heating Capacity: 10 deg F minimum above ambient temperature.

4. Shower:

   a. Shower Capacity: Not less than 20 gpm for at least 15 minutes.
   b. Supply Piping: NPS 1 with flow regulator and stay-open control valve.
   c. Control-Valve Actuator: Pull rod.
   d. Shower Head: 8-inch-minimum diameter, chrome-plated brass or stainless steel.
   e. Mounting: Pedestal.

5. Eyewash Unit:

   a. Capacity: Not less than 0.4 gpm for at least 15 minutes.
   b. Supply Piping: NPS 1/2 with flow regulator and stay-open control valve.
   c. Control-Valve Actuator: Paddle.

6. Eye/Face Wash Unit:

   a. Capacity: Not less than 3 gpm for at least 15 minutes.
   b. Control-Valve Actuator: Paddle.

2.5 SUPPLEMENTAL EQUIPMENT

A. Self-Contained, Personal Eyewash Units, Insert drawing designation:

1. Manufacturers: Subject to compliance with requirements, provide products by one of the following:

   a. Bradley Corporation.
   b. Guardian Equipment Co.

2. Capacity: Not less than 0.4 gpm.
3. Pressure Tank: 5 gal., stainless steel, cylindrical, with pressure gage and base suitable for on-floor installation.
4. Flushing Fluid: Medically acceptable solution manufactured and labeled according to applicable regulations.
5. Spray-Head Assembly: Chrome-plated copper alloy or stainless-steel piping with flow regulator; paddle-actuated, stay-open control valve; and two spray heads mounted on tank.

B. Deck-Mounted, Plumbed Drench Hoses,:

1. Manufacturers: Subject to compliance with requirements, provide products by one of the following:

    a. Bradley Corporation.
    b. Guardian Equipment Co.
    c. Stingray Systems LLC.
    d. WaterSaver Faucet Co.

2. Capacity: Not less than 0.4 gpm.
3. Supply Fitting: NPS 1/2 brass with flow regulator.
4. Drench Hose: Hand-held spray head with squeeze-handle actuation and hose.
5. Mounting: In hole in deck.

C. Wall-Mounted, Plumbed Drench Hoses,:

1. Manufacturers: Subject to compliance with requirements, provide products by one of the following:

    a. Bradley Corporation.
    b. Guardian Equipment Co.
    c. WaterSaver Faucet Co.

2. Capacity: Not less than 3.0 gpm for at least 15 minutes.
3. Supply Fitting: NPS 1/2 brass with flow regulator.
4. Drench Hose: Hand-held spray head with squeeze-handle actuation and hose.
5. Mounting: Wall bracket.

2.6 WATER-TEMPERING EQUIPMENT

A. Hot- and Cold-Water, Water-Tempering Equipment,:

1. Manufacturers: Subject to compliance with requirements, provide products by one of the following:

    a. Bradley Corporation.
    b. Guardian Equipment Co.
    c. Stingray Systems LLC.

2. Description: Factory-fabricated equipment with thermostatic mixing valve.

    a. Thermostatic Mixing Valve: Designed to provide 85 deg F tepid, potable water at emergency plumbing fixtures, to maintain temperature at plus or minus 5 deg F throughout required 15-minute test period, and in case of unit failure to continue cold-water flow, with union connections, controls, metal piping, and corrosion-resistant enclosure.
    b. Supply Connections: For hot and cold water.

B. Steam and Cold-Water, Water-Tempering Equipment,:

1. Manufacturers: Subject to compliance with requirements, provide products by the following:

a. Therm-Omega-Tech, Inc.

2. Description: Factory-fabricated equipment with thermostatic mixing valve.

a. Thermostatic Mixing Valve: Designed to provide 85 deg F tepid, potable water at emergency plumbing fixtures, to maintain temperature at plus or minus 5 deg F throughout required 15-minute test period, and in case of unit failure to continue cold-water flow, with union connections, steam controls, heat exchanger, high-temperature-limit and freeze-protection devices, metal piping, and corrosion-resistant enclosure.
b. Supply Connections: For steam and cold water.

C. Electric Water-Tempering Equipment,:

1. Manufacturers: Subject to compliance with requirements, provide products by the following:

a. Chronomite Laboratories, Inc; a division of Morris Group International.

2. Description: Factory-fabricated equipment with electric heating.

a. Heating System: Electric, designed to provide 85 deg F tepid, potable water at emergency plumbing fixtures, to maintain temperature at plus or minus 5 deg F throughout required 15-minute test period, and in case of unit failure to continue cold-water flow, with union connections, controls, heating coils, high-temperature-limit device, metal piping, and corrosion-resistant enclosure.

2.7 SOURCE QUALITY CONTROL

A. Certify performance of emergency plumbing fixtures by independent testing organization acceptable to authorities having jurisdiction.

1. Exception: .

PART 3 - EXECUTION

3.1 EXAMINATION

A. Examine roughing-in for water and waste piping systems to verify actual locations of piping connections before plumbed emergency plumbing fixture installation.

B. Proceed with installation only after unsatisfactory conditions have been corrected.

3.2 EMERGENCY PLUMBING FIXTURE INSTALLATION

A. Assemble emergency plumbing fixture piping, fittings, control valves, and other components.

B. Install fixtures level and plumb.

C. Fasten fixtures to substrate.

D. Install shutoff valves in water-supply piping to fixtures. Use ball or gate valve if specific type valve is not indicated. Install valves chained or locked in open position if permitted. Install valves in locations where they can easily be reached for operation. Comply with requirements for valves specified in Section 22 0523.12 "Ball Valves for Plumbing Piping" and Section 22 0523.15 "Gate Valves for Plumbing Piping."

1. Exception: Omit shutoff valve on supply to group of plumbing fixtures that includes emergency equipment.
2. Exception: Omit shutoff valve on supply to emergency equipment if prohibited by authorities having jurisdiction.

E. Install shutoff valve and strainer in steam piping and shutoff valve in condensate return piping. Comply with requirements for steam and condensate piping specified in Section 23 2213 "Steam and Condensate Heating Piping" and Section 23 2216 "Steam and Condensate Piping Specialties."

F. Install dielectric fitting in supply piping to emergency equipment if piping and equipment connections are made of different metals. Comply with requirements for dielectric fittings specified in Section 22 1116 "Domestic Water Piping."

G. Install thermometers in supply and outlet piping connections to water-tempering equipment. Comply with requirements for thermometers specified in Section 22 0519 "Meters and Gages for Plumbing Piping."

H. Install trap and waste piping on drain outlet of emergency equipment receptors that are indicated to be directly connected to drainage system. Comply with requirements for waste piping specified in Section 22 1316 "Sanitary Waste and Vent Piping."

I. Install indirect waste piping on drain outlet of emergency equipment receptors that are indicated to be indirectly connected to drainage system. Comply with requirements for waste piping specified in Section 22 1316 "Sanitary Waste and Vent Piping."

J. Install escutcheons on piping wall and ceiling penetrations in exposed, finished locations. Comply with requirements for escutcheons specified in Section 22 0518 "Escutcheons for Plumbing Piping."

K. Fill self-contained fixtures with flushing fluid.

3.3 CONNECTIONS

A. Connect cold-water-supply piping to plumbed emergency plumbing fixtures not having water-tempering equipment. Comply with requirements for cold-water piping specified in Section 22 1116 "Domestic Water Piping."

B. Connect hot- and cold-water-supply piping to hot- and cold-water, water-tempering equipment. Connect output from water-tempering equipment to emergency plumbing fixtures. Comply with requirements for hot- and cold-water piping specified in Section 22 1116 "Domestic Water Piping."

C. Connect steam and cold-water-supply and condensate return piping to steam and cold water-tempering equipment. Connect output from water-tempering equipment to emergency plumbing fixtures. Comply with requirements for cold-water piping specified in Section 22 1116 "Domestic Water Piping" and comply with requirements for steam and condensate piping specified in

Section 23 2213 "Steam and Condensate Heating Piping" and Section 23 2216 "Steam and Condensate Piping Specialties."

D. Connect cold water and electrical power to electric heating water-tempering equipment. Comply with requirements for cold-water piping specified in Section 22 1116 "Domestic Water Piping."

E. Directly connect emergency plumbing fixture receptors with trapped drain outlet to sanitary waste and vent piping. Comply with requirements for waste piping specified in Section 22 1316 "Sanitary Waste and Vent Piping."

F. Indirectly connect emergency plumbing fixture receptors without trapped drain outlet to sanitary waste or storm drainage piping.

G. Where installing piping adjacent to emergency plumbing fixtures, allow space for service and maintenance of fixtures.

3.4 IDENTIFICATION

A. Install equipment nameplates or equipment markers on emergency plumbing fixtures and equipment and equipment signs on water-tempering equipment. Comply with requirements for identification materials specified in Section 22 0553 "Identification for Plumbing Piping and Equipment."

3.5 FIELD QUALITY CONTROL

A. Mechanical-Component Testing: After plumbing connections have been made, test for compliance with requirements. Verify ability to achieve indicated capacities.

B. Tests and Inspections:

1. Perform each visual and mechanical inspection.
2. Leak Test: After installation, charge system and test for leaks. Repair leaks and retest until no leaks exist.
3. Operational Test: After electrical circuitry has been energized, start units to confirm proper unit operation.
4. Test and adjust controls and safeties. Replace damaged and malfunctioning controls and equipment.

C. Emergency plumbing fixtures and water-tempering equipment will be considered defective if they do not pass tests and inspections.

D. Prepare test and inspection reports.

3.6 ADJUSTING

A. Adjust or replace fixture flow regulators for proper flow.

B. Adjust equipment temperature settings.

END OF SECTION

CSI MASTER FORMAT 2012 GUIDE SPECIFICATION FOR HWAT

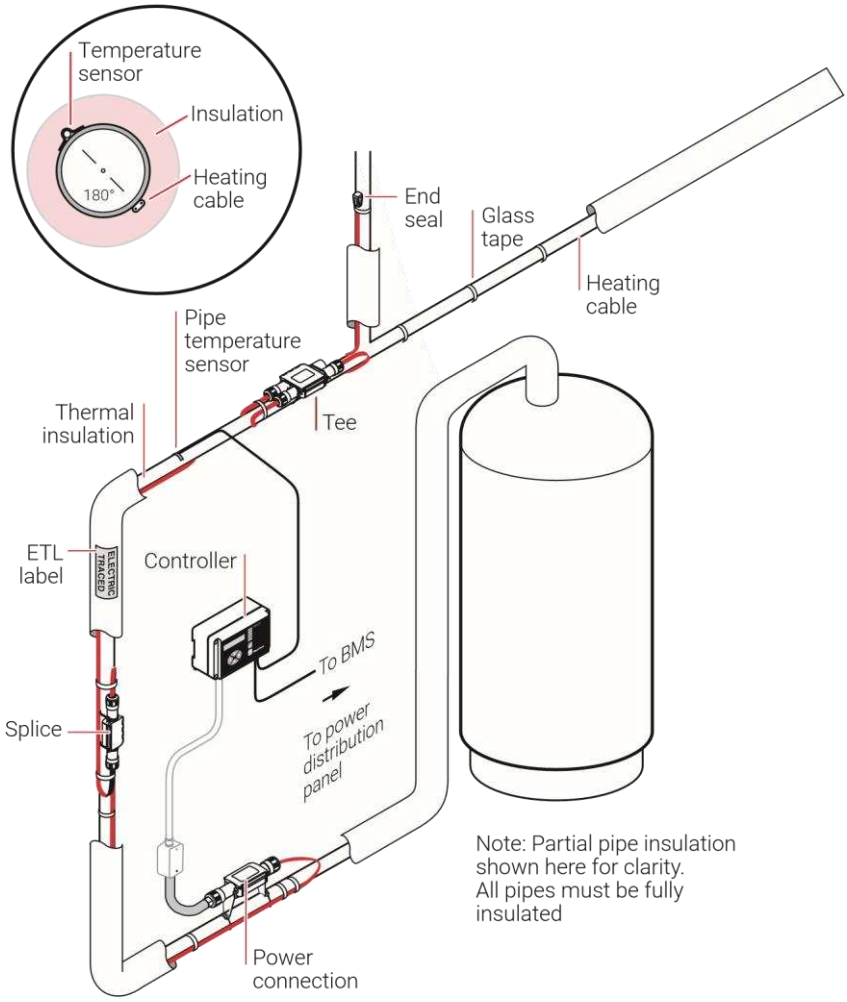

System for temperature maintenance of domestic hot water supply systems with energy efficient time based control and BMS communication capabilities.

SCOPE

This specification describes an energy efficient system for temperature maintenance of domestic hot water supply systems without the need for recirculation designs.

This page gives a general overview of the system and the CSI formatted specification begins on page four (4).

SYSTEM DESCRIPTION

The HWAT system complies with local energy codes, including California Title 24, due to a time based control methodology and an energy efficient thermal insulation schedule.

Self-Regulating Heating Cable nVent RAYCHEM HWAT self-regulating heating cable (HWAT-R2) with plasticizer diffusion shield, heavy tinned copper braid and polyolefin outer jacket. The heating cable shall be part of a UL Listed, CSA Certified and FM Approved system.

CSI MASTER FORMAT 2012 GUIDE SPECIFICATION FOR HWAT

System Connection Kits

RAYCHEM RayClic connection kits for power connections, tees/splices and end seals.

Controller

Single Circuit Control **Distributed Group Control**

RAYCHEM HWAT-ECO digital controller with: RAYCHEM ACS-30 Multi-circuit digital control system with:

- Flexible temperature control from 105 – 140°F • Pre-programmed application based heattracing controller
- Three programmable temperature set points for maximum • Touch-screen user interface (ACS-UIT2) communicates with up energy efficiency: to 52 ACS-PCM2-5 modular control panels.The RAYCHEM C910-
  - Maintain 485 controller may be used in the ACS-30 system for single circuit extensions
  - Economy

• BMS interface

- Off
  - Controls up to 260 heat-tracing circuits with up to 388
  - Heat cycle setting temperature inputs (RTDs)
  - 24/7 time based control • Proportional Ambient Sensing Control (PASC).
  - Nine pre-defined temperature • 30 A switching capacity rating setpoint programs
  - Enclosure
  - BMS interface
- ACS-UIT2: NEMA 4
- Pipe temperature sensor

– ACS-PCM2-5: NEMA 4/12

- Master/slave function
- 24 A switching capacity rating
- NEMA 12 enclosure **Device Server**

RAYCHEM ProtoNode: A multi-protocol device server to interface the ACS-30 with a building management system (BMS).

Thermal Pipe Insulation

Flame retardant insulation (closed-cell or fiberglass) with waterproof covering is required following nVent insulation schedule as detailed in the HWAT Product Selection and Design Guide.

SYSTEM DESCRIPTION

Designer Notes

1. For proper cable selection refer to the HWAT product selection and design guide.
2. External 30-mA ground-fault circuit protection is required when using the HWAT-ECO. Ground-fault circuit protection (adjustable) is integrated in the ACS-30 controller and does not need to be provided separately.
3. No temperature sensors are required for pipe temperature control. Temperature sensors can be used to monitor the water heater or mixing valve output. With ACS-30, additional temperature sensors can be used to monitor the overall performance of the system.
4. The HWAT-ECO may be connected to the BMS using two conductor twisted pair shielded RS-485 cable (PTM Catalog Number: MONI-RS485-WIRE). The installation of the communication wiring is included in specification section 25 50 00.
5. The ACS-30 may be connected to the BMS through the ProtoNode using two conductor twisted pair shielded RS-485 cable (PTM Catalog Number: MONI-RS485-WIRE). The ProtoNode is connected to the BMS by Ethernet or RS-485. The installation of the communication wiring is included in specification section 25 50 00.
6. The HWAT-ECO is a wall mounted controller with a NEMA 12 rated enclosure for indoor installation.
7. ACS-UIT2 should be centrally located in the building connected to the remote ACS-PCM2-5 control panels using RS-485 cable. The ACS-PCM2-5 control panels may be located indoors or outdoors throughout the installation.
8. The location of the controller, power connection, tees/splices and end seals must be shown on the drawings.

Drawing Details

Installation details can be found at CADdetails.com under Hot Water Temperature Maintenance (HWAT) folder.

SECTION 22 5214

HEAT TRACING FOR PLUMBING PIPING

PART 1 – GENERAL

1.01 SUMMARY

A. This Section includes a UL Listed, CSA Certified and FM Approved heat tracing system for temperature maintenance of domestic hot water supply systems consisting of self-regulating heating cable, connection kits and energy efficient time based control.

B. The system complies with California Title 24 energy requirements.

1.02 RELATED SECTIONS

A. Section 22 0533 – Heat Tracing for Plumbing Piping

B. Section 22 0719 – Plumbing Piping Insulation

C. Section 25 3400 – Integrated Automation Instrumentation and Terminal Devices for Plumbing

D. Section 25 5400 – Integrated Automation Control of Plumbing

1.03 SYSTEM DESCRIPTION

A. System for temperature maintenance of domestic hot water supply systems with energy efficient time based control, monitoring, and Building Management System (BMS) communication capabilities.

1.04 SUBMITTALS

A. Product Data

1. Heating cable data sheet
2. UL, CSA, FM approval certificates for hot water temperature maintenance systems
3. Hot water temperature maintenance design guide
4. System installation and operation manual
5. System installation details
6. Connection kits and accessories data sheet
7. Controller data sheet
8. Controller wiring diagram

1.05 QUALITY ASSURANCE

A. Manufacturers' Qualifications

1. Manufacturer to show minimum of thirty (30) years experience in manufacturing electric self-regulating heating cables.
2. Manufacturer will be ISO-9001 registered.
3. Manufacturer to provide products consistent with IEEE 515.1 and CSA 22.2 No 130-03 requirements.

B. Installer Qualifications

1. System installer shall have complete understanding of product and product literature from manufacturer or authorized representative prior to installation. Electrical connections shall be performed by a licensed electrician.

C. Regulatory Requirements and Approvals

1. The system (heating cable, connection kits, and controller) shall be UL Listed, CSA Certified and FM Approved for hot water temperature maintenance.

D. Electrical Components, Devices, and Accessories: Listed and labelled as defined in NFPA 70, Article 100, by a Nationally Recognized Testing Laboratory (NRTL), and marked for intended use.

1.06 DELIVERY, STORAGE AND HANDLING

A. General Requirements: Deliver, store and handle products to prevent their deterioration or damage due to moisture, temperature changes, contaminates or other causes.

B. Delivery and Acceptance Requirements: Deliver products to site in original, unopened containers or packages with intact and legible manufacturers' labels identifying the following:

1. Product and Manufacturer
2. Length/Quantity
3. Lot Number
4. Installation and Operation Manual
5. MSDS (if applicable)

C. Storage and Handling Requirements

1. Store the heating cable in a clean, dry location with a temperature range 0°F (–18°C) to 140°F (60°C).
2. Protect the heating cable from mechanical damage.

1.07 WARRANTY

A. Extended Warranty

1. Manufacturer shall offer a ten (10) year warranty for all heating cables and components. Provide one (1) year warranty for all heat trace controllers.
2. Contractor shall submit to owner results of installation tests required by the manufacturer.

PART 2 – PRODUCTS

2.01 MANUFACTURERS AND PRODUCTS

A. Contract Documents are based on manufacturer and products named below to establish a standard of quality.

B. Basis of Design

1. Basis of Design Product Selections

a. Manufacturer

1. Manufacturers shall have more than thirty (30) years' experience with manufacture & installation self-regulating heating cables.
2. Manufacturer shall provide UL, CSA, FM approval certificates for hot water temperature maintenance system
3. Manufacturer shall be nVent, LLC, located at, 7433 Harwin Drive, Houston, TX 77036 Tel: (800) 545-6258, nVent.com.

b. Hot Water Temperature Maintenance System

1. RAYCHEM HWAT self-regulating heating cables with plasticizer diffusion shield, heavy tinned copper braid and polyolefin outer jacket.
2. RAYCHEM RayClic and accessories.
3. RAYCHEM HWAT-ECO digital controller.
4. RAYCHEM ProtoNode multi-protocol device server.
5. The HWAT system complies with local energy codes, including California Title 24, due to a time based control methodology (HWAT-ECO) and an energy efficient thermal insulation schedule.

2.02 PRODUCTS, GENERAL

A. Single Source Responsibility: Furnish heat tracing system for the temperature maintenance of domestic hot water supply systems from a single manufacturer.

B. The system (heating cable, connection kits, and controller) shall be UL Listed, CSA Certified and FM Approved for hot water temperature maintenance. No parts of the system may be substituted or exchanged.

2.03 PRODUCTS

A. Self-Regulating Heating Cable

1. Heating cable shall be RAYCHEM HWAT self-regulating heating cable manufactured by nVent. a. Model Numbers: HWAT-R2
2. The heating cable shall consist of a continuous core of conductive polymer that is radiation crosslinked, extruded between two (2) 16 AWG nickel-plated copper bus wires that varies its power output in response to pipe temperature changes.
3. The heating cable shall have a modified polyolefin inner jacket for dielectric integrity.
4. The heating cable shall have a plasticizer diffusion shield.
5. The heating cable shall have a thicker gauge (5/24) tinned copper braid for ground path and mechanical ruggedness.
6. The heating cable shall have a color coded polyolefin outer jacket.
7. The heating cable shall have a self-regulating factor of at least 70 percent for HWAT-R2. The self-regulating factor is defined as the percent reduction of the heating cable power output going from a 40°F pipe temperature to 150°F pipe temperature.
8. The heating cable shall operate on line voltages without the use of transformers.
9. The heating cable shall be UL part of a UL Listed, CSA Certified and FM Approved system.
10. The outer jacket of the heating cable shall have the following markings:
    a. Heating cable model number
    b. Agency listings
    c. Meter mark
    d. Lot/Batch ID

B. Heating Cable Connection Kits

1. Heating cable connection kits shall be RAYCHEM RayClic connection kits.
2. Manufacturer shall provide power connection, splice/tee and end seal kits compatible with selected heating cable.
3. Installation shall not require the installing contractor to cut into the heating-cable core to expose the bus wires.
4. Connection kits shall be rated NEMA 4X to prevent water ingress and corrosion. All components shall be UV stabilized.
5. Connection kits shall be UL Listed and CSA Certified.

C. Heating Cable Installation Accessories

1. High temperature, glass filament tape for attachment of heating cable to fire sprinkler piping. Cable ties are not permitted. (PTM Catalog Number: GT-66)
2. Plastic Piping – provide an aluminium self-adhesive tape over the heating cable on all plastic piping if required. (PTM Catalog Number: AT-180)
3. Labels – Provide warning labels every 10 feet on exterior of insulation, opposite sides of pipe. (PTM Catalog Number: ETL)

D. Energy Efficient Time Based Control

1. Multiple Circuit Distributed Digital Control System

a. Distributed digital control system shall be RAYCHEM ACS-30 heat-trace control system.
b. Heating cable manufacturer shall provide a distributed digital control system with preprogrammed parameters to provide concurrent control for heating cables used for pipe freeze protection, flow maintenance, hot water temperature maintenance, surface snow melting, roof and gutter de-icing, freezer frost heave prevention and floor heating applications.
c. All programming shall be done through the central User Interface Terminal (ACS-UIT2).
d. The ACS-UIT2 shall be a color LCD touch-screen display with password protection to prevent unauthorized access to the system.
e. The ACS-UIT2 shall communicate with up to fifty-two (52) ACS Power Control Panels (ACSPCM2-5) where each panel can control up to five (5) circuits and accept up to five (5) temperature inputs. C910-485 controllers may also be added to the ACS-30 system for single circuit extensions.
f. Digital control system shall be capable of assigning up to four (4) RTD temperature inputs per heat-tracing circuit.
g. The ACS-UIT2 shall communicate with up to sixteen (16) Remote Monitoring Modules (RMM2), where each module can accept up to 8 temperature inputs.
h. The ACS-UIT2 shall have a USB port to allow for quick and easy software update.
i. The ACS-UIT2 shall have three (3) programmable alarm contacts including an alarm light on the enclosure cover.
j. A separate offline software tool shall be made available to allow users to pre-program the digital control system and transfer program via a USB drive or Ethernet.
k. The ACS-UIT2 enclosure shall be NEMA 4 for indoor or outdoor locations.
l. The ACS-PCM2-5 panel shall be in a NEMA 4/12 enclosure approved for nonhazardous indoor and outdoor locations.
m.The ACS-PCM2-5 panel shall provide ground-fault and line current sensing, alarming, switching and temperature inputs for five (5) heat tracing circuits.
n. Each ACS-PCM2-5 panel shall have five (5) 3-pole, 30 A contactors (EMR type).
o. The ACS-PCM2-5 panel shall be capable of operating at 120 V to 277 V.
p. The ACS-PCM2-5 shall have an alarm contact including an alarm light on the panel cover.
q. Digital controller shall have an integrated adjustable GFPD (10 – 200 mA).
r. Digital control system can be configured for On/Off, ambient sensing, PASC and timed duty cycle control (HWAT only) modes based on the application. PASC control proportionally energizes the power to the heating cable to minimize energy based on ambient sensed conditions.
s. Upon communication loss with the user interface terminal (ACS-UIT2) the ACS-PCM2-5 panels shall control with the last downloaded set point.
t. In HWAT control mode, the ACS-30 shall have time based control algorithm with three programmable temperature setpoints for maximum energy efficiency (Maintain, Economy and Off)
u. In HWAT control mode, the pre-programmed duty cycles shall be based on RAYCHEM HWAT heating cables only. No other heating cables may be used in the HWAT control mode.
v. Digital control system will have a built-in self-test feature to verify proper functionality of heating cable system.

w. Digital control system will also be able to communicate with BMS by one of the following protocols using the RAYCHEM ProtoNode multi-protocol gateway. BACnet® [ProtoNode-RER]

x. The following variables will be monitored by the digital controller and reported back to the BMS.

1. Temperature
2. Ground-fault
3. Current draw
4. Power consumption
5. Associated alarms

y. The ACS-UIT2 shall be c-CSA-us Certified. The ACS-PCM2-5 panel shall be c-UL-us Listed.

E. Thermal Pipe Insulation

1. Pipes must be thermally insulated in accordance with the HWAT Design Guide requirements.
2. Thermal insulation must be a type that is flame retardant (closed-cell or fiberglass) with waterproof covering.

2.04 SYSTEM LISTING

A. The system (heating cable, connection kits, and controller) shall be UL Listed, CSA Certified and FM Approved for hot water temperature maintenance.

B. The temperature maintenance system shall have a design, installation and operating manual specific to domestic hot water piping.

PART 3 - EXECUTION

3.01 INSTALLERS

A. Acceptable Installers

1. Subject to compliance with requirements of Contract Documents, installer shall be familiar with installing heat-trace cable and equipment.

3.02 INSTALLATION

A. Comply with manufacturer's recommendations in the HWAT System Installation and Operation Manual.

B. Apply the heating cable linearly on the pipe after piping has successfully completed any pressure tests. Secure the heating cable to piping with fiberglass tape.

C. Install electric heating cable according to the drawings and the manufacturer's instructions. The installer shall be responsible for providing a complete functional system, installed in accordance with applicable national and local requirements.

D. Grounding of controller shall be equipment according to Section 26 0526 "Grounding and Bonding for Electrical Systems." E. Connection of all electrical wiring shall be according to Section 26 0519 "Low-Voltage Electrical Power Conductors and Cables."

F. Pipes must be thermally insulated in accordance with the HWAT design guide requirements.

3.03 FIELD QUALITY CONTROL

A. Initial start-up and field testing (commissioning) of the system shall be performed by factory technician or factory representative per the owner's requirements.

B. Field Testing and Inspections

1. The system shall be commissioned in accordance to the HWAT Installation and Operation manual.
2. The heating cable circuit integrity shall be tested using a 2500 Vdc megohmmeter at the following intervals; a. Before installing the heating cable
   b. After heating cable has been installed onto the pipe
   c. After installing connection kits
   d. After the thermal insulation is installed onto the pipe
   e. Prior to initial start-up (commissioning)
   f. As part of the regular system maintenance
   g. Minimum acceptable insulation resistance shall be 1000 megohms or greater
3. The technician shall verify the insulation schedule is in compliance with the HWAT Installation and Operation manual.
4. The technician shall verify that the HWAT-ECO control parameters are set to the application requirements.
5. The technician shall verify that the HWAT-ECO alarm contacts are corrected connected to the BMS.
6. The technician shall verify that the ProtoNode-RER/-LER are configured correctly with the BMS.
7. All commissioning results will be recorded and presented to the owner.

3.04 MAINTENANCE

A. Maintenance Service

1. Comply with manufacturer's recommendations in HWAT System Installation and Operation Manual.

END OF SECTION

SECTION 22 6213

VACUUM PIPING FOR LABORATORY AND HEALTHCARE FACILITIES

PART 1 - GENERAL

1.1 RELATED DOCUMENTS

A. Drawings and general provisions of the Contract, including General and Supplementary Conditions and Division 01 Specification Sections, apply to this Section.

1.2 SUMMARY

A. Section Includes:

1. Medical-surgical vacuum piping, designated "medical vacuum."
2. Waste anesthetic gas disposal piping, designated "WAGD."
3. Dental vacuum piping, designated "dental vacuum."

B. Related Requirements:
1. Section 22 6219 "Vacuum Equipment for Laboratory and Healthcare Facilities" for vacuum producers and accessories.
2. Section 22 6400 "Medical Gas Alarms" for vacuum piping alarms.

1.3 DEFINITIONS

A. HVE: High-volume (oral) evacuation.

B. WAGD: Waste anesthetic gas disposal.

C. Medical vacuum piping systems include medical vacuum, WAGD, dental vacuum, HVE, and medical laboratory vacuum piping systems.

D. Nonmedical laboratory vacuum piping systems include laboratory low-vacuum and laboratory high-vacuum piping systems.

1.4 ACTION SUBMITTALS

A. Product Data: For each type of product.

1.5 INFORMATIONAL SUBMITTALS

A. Qualification Data: For Installer and testing agency.

B. Material Certificates: Signed by Installer certifying that medical vacuum piping materials comply with requirements in NFPA 99.

C. Brazing certificates.

D. Field quality-control reports.

1.6 CLOSEOUT SUBMITTALS

A. Operation and Maintenance Data: For vacuum piping specialties to include in emergency, operation, and maintenance manuals.

1.7 MAINTENANCE MATERIAL SUBMITTALS

A. Furnish extra materials that match products installed and that are packaged with protective covering for storage and identified with labels describing contents.

1. Quick-Coupler Service Connections: Furnish complete noninterchangeable medical vacuum suction inlets.

    a. Medical Vacuum: Equal to 10 percent of amount installed, but no fewer than one units.
    b. WAGD: Equal to 10 percent of amount installed, but no fewer than one units.

2. D.I.S.S. Service Connections: Furnish complete medical vacuum suction inlets complying with CGA V-5.

    a. Medical Vacuum D.I.S.S. No. 1220: Equal to 10 percent of amount installed, but no fewer than one units.
    b. WAGD D.I.S.S. No. 2220: Equal to 10 percent of amount installed, but no fewer than one units.

1.8 QUALITY ASSURANCE

A. Installer Qualifications:

1. Medical Vacuum Piping Systems for Healthcare Facilities: According to ASSE Standard #6010 for medical-gas-system installers.
2. Shape-Memory-Metal Coupling Joints: An authorized representative who is trained and approved by manufacturer.

B. Testing Agency Qualifications: An independent testing agency, with the experience and capability to conduct the vacuum piping testing indicated, that is a member of the Medical Gas Professional Healthcare Organization or is an NRTL, and that is acceptable to authorities having jurisdiction.

1. Qualify testing personnel according to ASSE Standard #6020 for medical-gas-system inspectors and ASSE Standard #6030 for medical-gas-system verifiers.

C. Brazing: Qualify processes and operators according to ASME Boiler and Pressure Vessel Code, Section IX, "Welding and Brazing Qualifications"; or AWS B2.2, "Standard for Brazing Procedure and Performance Qualification."

PART 2 - PRODUCTS

2.1 SYSTEM DESCRIPTION

A. Medical vacuum operating at 30 in. Hg.

B. WAGD operating at 15 in. Hg.

C. Dental vacuum operating at 12 in. Hg.

D. HVE operating at 8 in. Hg.

E. Medical laboratory vacuum operating at 24 in. Hg.

F. Laboratory low vacuum operating at 20 in. Hg.

G. Laboratory high vacuum operating at 29 in. Hg.

2.2 PIPES, TUBES, AND FITTINGS

A. Comply with NFPA 99 for medical vacuum piping materials.

B. Copper Medical Gas Tube: ASTM B 819, Type L, seamless, drawn temper that has been manufacturer cleaned, purged, and sealed for medical gas service or according to CGA G-4.1 for oxygen service. Include standard color marking "OXY," "MED," "OXY/MED," "OXY/ACR," or "ACR/MED" in blue.

C. Wrought-Copper Fittings: ASME B16.22, solder-joint pressure type that has been manufacturer cleaned, purged, and sealed for medical gas service or according to CGA G-4.1 for oxygen service.

D. Copper Unions: ASME B16.22 or MSS SP-123, wrought-copper or cast-copper alloy.

E. Cast-Copper-Alloy Flanges: ASME B16.24, Class 150.

1. Pipe-Flange Gasket Materials: ASME B16.21, nonmetallic, flat, asbestos-free, 1/8-inch maximum thickness, full-face type.
2. Flange Bolts and Nuts: ASME B18.2.1, carbon steel.

F. Shape-Memory-Metal Couplings:

1. Manufacturers: Subject to compliance with requirements, available manufacturers offering products that may be incorporated into the Work include, but are not limited to, the following:

   a. Aerofit, Inc.
   b. Smart Tap, Inc.

2. Description: Cryogenic compression fitting made of nickel-titanium, shape-memory alloy, and that has been manufacturer cleaned, purged, and sealed for oxygen service according to CGA G-4.1.

G. Flexible Pipe Connectors:

1. Manufacturers: Subject to compliance with requirements, available manufacturers offering products that may be incorporated into the Work include, but are not limited to, the following:

a. Flex-Hose Co., Inc.
b. Flexicraft Industries.
c. Hyspan Precision Products, Inc.
d. Mercer Gasket & Shim, Inc.
e. Metraflex Company (The).
f. Proco Products, Inc.
g. Unaflex.
h. Universal Metal Hose; a Hyspan Co.

2. Description: Corrugated-bronze tubing with bronze wire-braid covering and ends brazed to inner tubing.

a. Working-Pressure Rating: 200 psig minimum.
b. End Connections: Plain-end copper tube.

2.3 JOINING MATERIALS

A. Brazing Filler Metals: AWS A5.8/A5.8M, BCuP Series, copper-phosphorus alloys.

2.4 VALVES

A. General Requirements for Valves: Manufacturer cleaned, purged, and bagged according to CGA G-4.1 for oxygen service.

1. Exception: Factory cleaning and bagging are not required for valves for WAGD service.

B. Zone-Valve Box Assemblies: Box with medical gas valves, tube extensions, and gages.

1. Zone-Valve Boxes:

a. Steel Box with Aluminum Cover:

1) Manufacturers: Subject to compliance with requirements, provide products by one of the following:

a) Allied Healthcare Products Inc.
b) Amico Corporation.
c) Ohio Medical Corporation.

b. Description: Formed steel box with cover, anchors for recessed mounting, holes with grommets in box sides for tubing extension protection, and of size for single or multiple valves with pressure gages and in sizes required to permit manual operation of valves. Medical air and medical vacuum tubing, valves, and gages may be incorporated in zone valve boxes for medical gases.

1) Interior Finish: Factory-applied white enamel.

2) Cover Plate: Aluminum with frangible or removable windows.
3) Valve-Box Windows: Clear or tinted transparent plastic with labeling that includes rooms served, according to NFPA 99.

C. Copper-Alloy Ball Valves:

1. Manufacturers: Subject to compliance with requirements, provide products by one of the following:

a. Allied Healthcare Products Inc.; Chemetron Division.
b. Amico Corporation.
c. BeaconMedaes.
d. Conbraco Industries, Inc.
e. Marwin Valve; a division of Richards Industries.
f. NIBCO INC.
g. Ohio Medical Corporation.
h. Tri-Tech Medical Inc.

2. Description: Three-piece body, brass or bronze.
3. Pressure Rating: 300 psig minimum.
4. Ball: Full-port, chrome-plated brass.
5. Seats: PTFE or TFE.
6. Handle: Lever type with locking device.
7. Stem: Blowout proof with PTFE or TFE seal.
8. Ends: Manufacturer-installed ASTM B 819, copper-tube extensions and manufacturer-installed ASTM B 819, copper-tube extensions with pressure gage on one copper-tube extension.

D. Check Valves:

1. Manufacturers: Subject to compliance with requirements, provide products by one of the following:

a. Allied Healthcare Products Inc.; Chemetron Division.
b. Amico Corporation.
c. BeaconMedaes.
d. Conbraco Industries, Inc.
e. Ohio Medical Corporation.
f. Tri-Tech Medical Inc.

2. Description: In-line pattern, bronze.
3. Pressure Rating: 300 psig minimum.
4. Operation: Spring loaded.
5. Ends: Manufacturer-installed ASTM B 819, copper-tube extensions.

2.5 MEDICAL VACUUM SERVICE CONNECTIONS

A. Manufacturers: Subject to compliance with requirements, provide products by one of the following:

1. Allied Healthcare Products Inc.; Chemetron Division.
2. Amico Corporation.
3. BeaconMedaes.
4. Ohio Medical Corporation.

5. Oxequip Health Industries; a division of Allied Healthcare Products Inc.
6. Tri-Tech Medical Inc.

B. General Requirements for Medical Vacuum Service Connections:

1. Suitable for specific medical vacuum service listed.
2. Include roughing-in assemblies, finishing assemblies, and cover plates.
3. Individual cover plates are not required if service connection is in multiple unit or assembly with cover plate.
4. Recessed-type units made for concealed piping unless otherwise indicated.

C. Roughing-in Assembly:

1. Steel outlet box for recessed mounting and concealed piping.
2. Brass-body inlet block.
3. Seals that will prevent vacuum leakage.
4. ASTM B 819, NPS 3/8 copper outlet tube brazed to valve with service marking and tube-end dust cap.

D. Finishing Assembly:

1. Brass housing with primary check valve.
2. Seals that will prevent vacuum leakage.
3. Cover plate with gas-service label.

E. Quick-Coupler Suction Service Connections:

1. Inlets for medical vacuum and WAGD with noninterchangeable keyed indexing to prevent interchange between services.
2. Constructed to permit one-handed connection and removal of equipment.
3. With positive-locking ring that retains equipment stem in valve during use.

F. D.I.S.S. Suction Service Connections:

1. Inlets complying with CGA V-5.
2. Threaded indexing to prevent interchange between services.
3. Constructed to permit one-handed connection and removal of equipment.
4. Medical Vacuum: CGA V-5, D.I.S.S. No. 1220.
5. WAGD: CGA V-5, D.I.S.S. No. 2220.

G. Vacuum Bottle Brackets: One piece, with pattern and finish matching corresponding service cover plate.

H. Cover Plates:

1. One piece.
2. Aluminum or stainless steel.
3. Permanent, color-coded, identifying label matching corresponding service.

2.6 NITROGEN

A. Comply with USP 32 - NF 27 for oil-free dry nitrogen.

PART 3 - EXECUTION

3.1 PREPARATION

A. Cleaning of Medical Gas Tubing: If manufacturer-cleaned and -capped fittings or tubing is not available or if precleaned fittings or tubing must be recleaned because of exposure, have supplier or separate agency acceptable to authorities having jurisdiction perform the following procedures:

1. Clean medical gas tube and fittings, valves, gages, and other components of oil, grease, and other readily oxidizable materials as required for oxygen service according to CGA G-4.1.
2. Wash medical gas tubing and components in hot, alkaline-cleaner-water solution of sodium carbonate or trisodium phosphate in proportion of 1 lb of chemical to 3 gal. of water.

    a. Scrub to ensure complete cleaning.
    b. Rinse with clean, hot water to remove cleaning solution.

3.2 PIPING INSTALLATION

A. Drawing plans, schematics, and diagrams indicate general location and arrangement of vacuum piping. Indicated locations and arrangements were used to size pipe and calculate friction loss, expansion, vacuum producer sizing, and other design considerations. Install piping as indicated unless deviations to layout are approved on coordination drawings.

B. Comply with NFPA 99 for installation of vacuum piping.

C. Install piping concealed from view and protected from physical contact by building occupants unless otherwise indicated and except in equipment rooms and service areas.

D. Install piping indicated to be exposed and piping in equipment rooms and service areas at right angles or parallel to building walls. Diagonal runs are prohibited unless specifically indicated otherwise.

E. Install piping above accessible ceilings to allow sufficient space for ceiling panel removal and coordinate with other services occupying that space.

F. Install piping adjacent to equipment and specialties to allow service and maintenance.

G. Install vacuum piping with 1 percent slope downward in direction of flow.

H. Install nipples, unions, special fittings, and valves with pressure ratings same as or higher than piping pressure rating used in applications specified in "Piping Schedule" Article unless otherwise indicated.

I. Install eccentric reducers, if available, where vacuum piping is reduced in direction of flow, with bottoms of both pipes and reducer fitting flush.

J. Provide drain leg and drain trap at end of each main and branch and at low points.

K. Install thermometer and vacuum gage on inlet piping to each vacuum producer and on each

receiver and separator. Comply with requirements in Section 22 0519 "Meters and Gages for Plumbing Piping."

L. Install piping to permit valve servicing.

M. Install piping free of sags and bends.

N. Install fittings for changes in direction and for branch connections. Extruded-tee branch outlets in copper tubing may be made where specified.

O. Install medical vacuum piping from medical vacuum service connections specified in this Section, to equipment specified in Section 22 6219 "Vacuum Equipment for Laboratory and Healthcare Facilities," and to equipment specified in other Sections requiring medical vacuum service.

P. Install medical vacuum service connections recessed in walls. Attach roughing-in assembly to substrate; attach finishing assembly to roughing-in assembly.

Q. Install medical vacuum bottle bracket adjacent to each wall-mounted medical vacuum service connection suction inlet.

R. Connect vacuum piping to vacuum producers and to equipment requiring vacuum service.

S. Install unions in copper vacuum tubing adjacent to each valve and at final connection to each machine, specialty, and piece of equipment.

T. Install sleeves for piping penetrations of walls, ceilings, and floors. Comply with requirements for sleeves specified in Section 22 0517 "Sleeves and Sleeve Seals for Plumbing Piping."

U. Install escutcheons for piping penetrations of walls, ceilings, and floors. Comply with requirements for escutcheons specified in Section 22 0518 "Escutcheons for Plumbing Piping."

3.3 VALVE INSTALLATION

A. Install shutoff valve at each connection to and from vacuum equipment and specialties.

B. Install check valves to maintain correct direction of vacuum flow to vacuum-producing equipment.

C. Install valve boxes recessed in wall and anchored to substrate. Single boxes may be used for multiple valves that serve same area or function.

D. Install zone valves and gages in valve boxes. Rotate valves to angle that prevents closure of cover when valve is in closed position.

E. Install flexible pipe connectors in suction inlet piping to each vacuum producer.

3.4 JOINT CONSTRUCTION

A. Ream ends of pipes and tubes and remove burrs.

B. Remove scale, slag, dirt, and debris from outside of cleaned tubing and fittings before

assembly.

C. Remove scale, slag, dirt, and debris from inside and outside of pipe and fittings before assembly.

D. Brazed Joints: Join copper tube and fittings according to CDA's "Copper Tube Handbook," "Brazed Joints" chapter. Do not use flux. Continuously purge joint with oil-free dry nitrogen during brazing.

E. Flanged Joints:

1. Copper Tubing: Install flange on copper tubes. Use pipe-flange gasket between flanges. Join flanges with gasket and bolts according to ASME B31.9 for bolting procedure.

F. Shape-Memory-Metal Coupling Joints: Join new copper tube to existing tube according to procedures developed by fitting manufacturer for installation of shape-memory-metal coupling joints.

3.5 HANGER AND SUPPORT INSTALLATION

A. Comply with requirements in Section 22 0548 "Vibration and Seismic Controls for Plumbing Piping and Equipment" for seismic-restraint devices.

B. Comply with requirements in Section 22 0529 "Hangers and Supports for Plumbing Piping and Equipment" for pipe hanger and support devices.

C. Vertical Piping: MSS Type 8 or Type 42, clamps.

D. Individual, Straight, Horizontal Piping Runs:

1. 100 Feet and Less: MSS Type 1, adjustable, steel, clevis hangers.
2. Longer Than 100 Feet: MSS Type 43, adjustable, roller hangers.

E. Multiple, Straight, Horizontal Piping Runs 100 Feet or Longer: MSS Type 44, pipe rolls. Support pipe rolls on trapeze. Comply with requirements in Section 22 0529 "Hangers and Supports for Plumbing Piping and Equipment" for trapeze hangers.

F. Base of Vertical Piping: MSS Type 52, spring hangers.

G. Support horizontal piping within 12 inches of each fitting and coupling.

H. Rod diameter may be reduced one size for double-rod hangers, with 3/8-inch- minimum rods.

I. Install hangers for copper tubing with the following maximum horizontal spacing and minimum rod diameters:

1. NPS 1/4: 60 inches with 3/8-inch rod.
2. NPS 3/8 and NPS 1/2: 72 inches with 3/8-inch rod.
3. NPS 3/4: 84 inches with 3/8-inch rod.
4. NPS 1: 96 inches with 3/8-inch rod.
5. NPS 1-1/4: 108 inches with 3/8-inch rod.
6. NPS 1-1/2: 10 feet with 3/8-inch rod.
7. NPS 2: 11 feet with 3/8-inch rod.

8. NPS 2-1/2: 13 feet with 1/2-inch rod.
9. NPS 3: 14 feet with 1/2-inch rod.
10. NPS 3-1/2: 15 feet with 1/2-inch rod.
11. NPS 4: 16 feet with 1/2-inch rod.
12. NPS 5: 18 feet with 1/2-inch rod.
13. NPS 6: 20 feet with 5/8-inch rod.
14. NPS 8: 23 feet with 3/4-inch rod.

J. Install supports for vertical copper tubing every 10 feet.

3.6 IDENTIFICATION

A. Install identifying labels and devices for laboratory vacuum piping, valves, and specialties. Comply with requirements in Section 22 0553 "Identification for Plumbing Piping and Equipment."

B. Install identifying labels and devices for medical vacuum piping systems according to NFPA 99. Use the following or similar captions and color-coding for piping products where required by NFPA 99:

1. Medical Vacuum: Black letters on white background.
2. WAGD: White letters on violet background.
3. Dental Vacuum: Black boxed letters on white-and-black diagonal stripe background.
4. HVE: Black boxed letters on white-and-black diagonal stripe background.
5. Medical Laboratory Vacuum: Black boxed letters on white-and-black checkerboard background.

3.7 FIELD QUALITY CONTROL FOR HEALTHCARE FACILITY MEDICAL VACUUM PIPING

A. Testing Agency: Engage a qualified testing agency to perform tests and inspections of medical vacuum piping systems in healthcare facilities and to prepare test and inspection reports.

B. Tests and Inspections:

1. Medical Vacuum Testing Coordination: Perform tests, inspections, verifications, and certification of medical vacuum piping systems concurrently with tests, inspections, and certification of medical compressed-air piping and medical gas piping systems.
2. Preparation: Perform the following Installer tests according to requirements in NFPA 99 and ASSE Standard #6010:

    a. Initial blowdown.
    b. Initial pressure test.
    c. Cross-connection test.
    d. Piping purge test.
    e. Standing pressure test for vacuum systems.
    f. Repair leaks and retest until no leaks exist.

3. System Verification: Perform the following tests and inspections according to NFPA 99, ASSE Standard #6020, and ASSE Standard #6030:

    a. Standing pressure test.
    b. Individual-pressurization or pressure-differential cross-connection test.
    c. Valve test.

d. Master and area alarm tests.
e. Piping purge test.
f. Final tie-in test.
g. Operational vacuum test.
h. Verify correct labeling of equipment and components.

4. Testing Certification: Certify that specified tests, inspections, and procedures have been performed and certify report results. Include the following:

a. Inspections performed.
b. Procedures, materials, and gases used.
c. Test methods used.
d. Results of tests.

C. Remove and replace components that do not pass tests and inspections and retest as specified above.

3.8 FIELD QUALITY CONTROL FOR LABORATORY FACILITY NONMEDICAL VACUUM PIPING

A. Testing Agency: Engage qualified testing agency to perform field tests and inspections of vacuum piping in nonmedical laboratory facilities and to prepare test and inspection reports.

B. Tests and Inspections:

1. Piping Leak Tests for Vacuum Piping: Test new and modified parts of existing piping. Cap and fill vacuum piping with oil-free, dry nitrogen. Isolate test source and let stand for four hours to equalize temperature. Refill system, if required, to test pressure; hold for two hours with no drop in pressure.

a. Test Pressure for Copper Tubing: 100 psig.

2. Repair leaks and retest until no leaks exist.
3. Inspect filters for proper operation.

C. Remove and replace components that do not pass tests and inspections and retest as specified above.

3.9 PROTECTION

A. Protect tubing from damage.

B. Retain sealing plugs in tubing, fittings, and specialties until installation.

C. Clean tubing not properly sealed, and where sealing is damaged, according to "Preparation" Article.

3.10 PIPING SCHEDULE

A. Connect new copper tubing to existing copper tubing with memory-metal couplings.

B. Flanges may be used where connection to flanged equipment is required.

C. Medical Vacuum Piping: Use copper medical gas tube, wrought-copper fittings, and brazed joints.

D. WAGD Piping: Use copper medical gas tube, wrought-copper fittings, and brazed joints.

E. Dental Vacuum Piping: Use copper water tube, wrought-copper fittings, and brazed joints.

3.11 VALVE SCHEDULE

A. Shutoff Valves:

1. Copper Tubing: Copper-alloy ball valve with manufacturer-installed ASTM B 819, copper-tube extensions.

B. Zone Valves: Copper-alloy ball valve with manufacturer-installed ASTM B 819, copper-tube extensions with pressure gage on one copper-tube extension.

END OF SECTION

SECTION 22 6219

VACUUM EQUIPMENT FOR LABORATORY AND HEALTHCARE FACILITIES

PART 1 - GENERAL

1.1 RELATED DOCUMENTS

A. Drawings and general provisions of the Contract, including General and Supplementary Conditions and Division 01 Specification Sections, apply to this Section.

1.2 SUMMARY

A. Section Includes:

1. Reciprocating vacuum pumps.
2. Liquid-ring vacuum pumps.
3. Oil-sealed, rotary-screw vacuum pumps.
4. Rotary, dry-claw vacuum pumps.
5. Rotary, sliding-vane vacuum pumps.
6. Turbine exhausters.
7. Diaphragm vacuum pumps.
8. Dental vacuum pumps.
9. Dental vacuum pump control panels.

B. Related Requirements:

1. Section 22 6400 "Medical Gas Alarms" for vacuum equipment local alarms.

1.3 DEFINITIONS

A. Actual Air: Air delivered at vacuum producer inlet. Flow rate is air measured in acfm.

B. HVE: High-volume oral evacuation for dental applications in healthcare facilities.

C. Laboratory Vacuum Equipment: Vacuum producers and accessories for nonmedical laboratory facilities.

D. Medical Vacuum Equipment: Includes medical WAGD dental HVE and healthcare laboratory vacuum producers and accessories for healthcare facilities.

E. Standard Air: Free air at 68 deg F and 1 atmosphere before compression or expansion and measured in scfm.

F. WAGD: Waste anesthetic gas disposal for medical-surgical applications in healthcare facilities.

1.4 ACTION SUBMITTALS

A. Product Data: For each type of product.

B. Shop Drawings: For vacuum producers.

1. Include plans, elevations, sections, and mounting details.
2. Include details of equipment assemblies. Indicate dimensions, weights, loads, required clearances, method of field assembly, components, and location and size of each field connection.
3. Vibration Isolation Base Details: Detail fabrication including anchorages and attachments to structure and to supported equipment. Include adjustable motor bases, rails, and frames for equipment mounting.
4. Include diagrams for power, signal, and control wiring.

1.5 INFORMATIONAL SUBMITTALS

A. Qualification Data: For Installer and testing agency.

B. Seismic Qualification Certificates: For vacuum producers, accessories, and components, from manufacturer.

1. Basis for Certification: Indicate whether withstand certification is based on actual test of assembled components or on calculation.
2. Dimensioned Outline Drawings of Equipment Unit: Identify center of gravity and locate and describe mounting and anchorage provisions.
3. Detailed description of equipment anchorage devices on which the certification is based and their installation requirements.

C. Field quality-control reports.

1.6 CLOSEOUT SUBMITTALS

A. Operation and Maintenance Data: For vacuum equipment to include in operation and maintenance manuals.

1.7 MAINTENANCE MATERIAL SUBMITTALS

A. Furnish extra materials that match products installed and that are packaged with protective covering for storage and identified with labels describing contents.

1. Belts: Two for each belt-driven vacuum producer.

1.8 QUALITY ASSURANCE

A. Installer Qualifications:

1. Laboratory Vacuum Equipment for Nonmedical Laboratory Facilities: An employer of workers trained and approved by manufacturer.
2. Medical Vacuum Equipment for Healthcare Facilities: Qualify installers according to

ASSE 6010.

B. Testing Agency Qualifications: An independent testing agency, with the experience and capability to conduct the vacuum equipment testing indicated, that is a member of the Medical Gas Professional Healthcare Organization or is an NRTL, and that is acceptable to authorities having jurisdiction.

1. Qualify testing personnel according to ASSE 6020 for inspectors and ASSE 6030 for verifiers.

PART 2 - PRODUCTS

2.1 PERFORMANCE REQUIREMENTS

A. Delegated Design: Engage a qualified professional engineer, as defined in Section 01 4000 "Quality Requirements," to design vacuum equipment mounting.

B. Seismic Performance: Vacuum producers and accessories shall withstand the effects of earthquake motions determined according to ASCE/SEI 7.

1. The term "withstand" means "the vacuum producer and receiver or separator will remain in place without separation of any parts when subjected to the seismic forces specified and the unit will be fully operational after the seismic event."
2. Component Importance Factor: 1.5.
3. Insert requirements for Component Amplification Factor and Component Response Modification Factor.

2.2 GENERAL REQUIREMENTS FOR VACUUM PUMPS

A. Electrical Components, Devices, and Accessories: Listed and labeled as defined in NFPA 70, by a qualified testing agency, and marked for intended location and application.

B. Comply with NFPA 99, "Health Care Facilities," for vacuum equipment and accessories for medical vacuum systems.

C. Comply with UL 544, "Medical and Dental Equipment," for medical vacuum equipment.

D. Description: Factory-assembled, -wired, -piped, and -tested; electric-motor-driven; air-cooled; continuous-duty vacuum pumps and receivers.

E. Control Panels: Automatic control station with load control and protection functions. Comply with NEMA ICS 2 and UL 508.

1. Enclosure: NEMA ICS 6, Type 12 control panel unless otherwise indicated.
2. Motor Controllers: Full-voltage, combination-magnetic type with undervoltage release feature and motor-circuit-protector-type disconnecting means and short-circuit protective device.
3. Control Voltage: 120-V ac or less, using integral control power transformer.
4. Motor Overload Protection: Overload relay in each phase.
5. Starting Devices: Hand-off-automatic selector switch in cover of control panel, plus pilot device for automatic control.

6. Automatic control switches to sequence lead-lag vacuum pumps for multiplex vacuum pumps.
7. Instrumentation: Include vacuum pump inlet and receiver vacuum gages, hour meter, vacuum pump discharge-air and coolant temperature gages, and control transformer.
8. Alarm Signal Devices: For connection to alarm system to indicate when backup vacuum pump is operating.

F. Receivers: Steel tank constructed according to ASME Boiler and Pressure Vessel Code, Section VIII, Division 1; bearing appropriate code symbols.

1. Interior Finish: Corrosion-resistant coating.
2. Accessories: Include vacuum relief valve, vacuum gage, and drain.

G. Mounting Frames: Fabricate base and attachment to vacuum pump and components with reinforcement strong enough to resist movement during a seismic event when base is anchored to building structure.

2.3 RECIPROCATING VACUUM PUMPS

A. Reciprocating Vacuum Pumps:

1. Manufacturers: Subject to compliance with requirements, provide products by one of the following:

   a. Allied Healthcare Products Inc.
   b. Gardner Denver, Inc.
   c. Ingersoll-Rand.

2. Description: Packaged unit.
3. Vacuum Pump(s): Lubricated, reciprocating-piston type.

   a. Inlet filters.
   b. Low-lubrication oil pressure switches, submerged gear-type oil pumps, and oil filters.
   c. Belt guards totally enclosing pulleys and belts.

4. Receiver: ASME construction steel tank with vacuum relief valve.
5. Outlet silencers and oil-mist separators on discharge piping.

B. Capacities and Characteristics:

1. Vacuum Service: Medical WAGD Dental Medical laboratory Nonmedical laboratory vacuum.
2. Vacuum Pump(s): Three.
3. Vacuum Required: 26 in. Hg.
4. Mounting: Tank mounted.
5. The equipment descriptions listed in the section may not all be used on this project. Refer to the Equipment Schedules on the drawings for the specific application for each product or material. Products not shown on the schedule for the specific application may not be substituted without pre-approval from the Engineer. Where there is a conflict between the drawing schedules and specifications, the drawing schedules shall take precedent

6. Receiver:

a. Orientation: Vertical arrangement.
b. Pressure Rating: 100 psig minimum.
c. Interior Finish: Epoxy.
d. Drain: Automatic valve.

2.4 LIQUID-RING VACUUM PUMPS

A. Liquid-Ring Vacuum Pumps:

1. Manufacturers: Subject to compliance with requirements, provide products by one of the following:

a. Allied Healthcare Products Inc.
b. Gardner Denver, Inc.
c. Ohio Medical Corporation.

2. Description: Packaged unit.
3. Vacuum Pump(s): Nonpulsating, rotary, liquid-ring type.

a. Construction: Bronze body and rotor.
b. Coupling: Nonlubricated, flexible type.
c. Sealing Fluid: Potable water with up to 90 percent recirculation.

4. Receiver: ASME construction steel tank with vacuum relief valve.
5. Outlet silencers and water-vapor separators on discharge connections.

B. Capacities and Characteristics:

1. Vacuum Service: Medical WAGD Dental Medical laboratory Nonmedical laboratory vacuum.
2. Vacuum Pump(s): Three.
3. Vacuum Required: 12 in. Hg.
4. Mounting: Tank mounted.
5. The equipment descriptions listed in the section may not all be used on this project. Refer to the Equipment Schedules on the drawings for the specific application for each product or material. Products not shown on the schedule for the specific application may not be substituted without pre-approval from the Engineer. Where there is a conflict between the drawing schedules and specifications, the drawing schedules shall take precedent

6. Receiver:

a. Orientation: Vertical arrangement.
b. Pressure Rating: 100 psig minimum.
c. Interior Finish: Epoxy.
d. Drain: Automatic valve.

2.5 OIL-SEALED, ROTARY-SCREW VACUUM PUMPS

A. Oil-Sealed, Rotary-Screw Vacuum Pumps:

1. Manufacturers: Subject to compliance with requirements, provide products by the

following:

a. Quincy Compressor.

2. Description: Packaged unit.
3. Vacuum Pump(s): Single-stage, oil-sealed, rotary, helical-screw type.

a. Coupling: Nonlubricated, flexible type.
b. Cooling/Lubrication System: Unit-mounted, air-cooled exchanger package prepiped to unit; with air-pressure circulation system with coolant stop valve, full-flow coolant filter, and thermal-bypass valve.
c. Air/Coolant Receiver and Separation Systems: 150-psig-rated steel tank with ASME safety valve, coolant-level gage, multistage air-coolant separator element, minimum pressure valve, blowdown valve, discharge check valve, coolant stop valve, full-flow coolant filter, and thermal-bypass valve.
d. Capacity Control: Capacity modulation between zero and 100 percent vacuum delivery. Include necessary control to hold constant vacuum. When vacuum demand is zero, unload unit by using vacuum switch and blowdown valve.

4. Receiver: ASME construction steel tank with vacuum relief valve.
5. Outlet silencers on discharge connections.

B. Capacities and Characteristics:

1. Vacuum Service: Medical WAGD Dental Medical laboratory Nonmedical laboratory vacuum.
2. Vacuum Pump(s): Three.
3. Vacuum Required: 26 in. Hg.
4. The equipment descriptions listed in the section may not all be used on this project. Refer to the Equipment Schedules on the drawings for the specific application for each product or material. Products not shown on the schedule for the specific application may not be substituted without pre-approval from the Engineer. Where there is a conflict between the drawing schedules and specifications, the drawing schedules shall take precedent

5. Receiver:

a. Orientation: Vertical arrangement.
b. Pressure Rating: 100 psig minimum.
c. Interior Finish: Epoxy.
d. Drain: Automatic valve.

2.6 ROTARY, DRY-CLAW VACUUM PUMPS

A. Rotary, Dry-Claw Vacuum Pumps:

1. Manufacturers: Subject to compliance with requirements, provide products by one of the following:

a. Allied Healthcare Products Inc.
b. Ohio Medical Corporation.

2. Description: Packaged unit.
3. Vacuum Pump(s): Single-stage, rotary, dry-claw type.

a. Coupling: Nonlubricated, flexible type.
b. Cooling System: Air cooled.
c. Capacity Control: Capacity modulation between zero and 100 percent vacuum delivery. Include necessary control to hold constant vacuum. When vacuum demand is zero, unload unit by using vacuum switch and blowdown valve.

4. Receiver: ASME construction steel tank with vacuum relief valve.
5. Outlet silencers on discharge connections.

B. Capacities and Characteristics:

1. Vacuum Service: Medical WAGD Dental Medical laboratory Nonmedical laboratory vacuum.
2. Vacuum Pump(s): Three.
3. Vacuum Required: 26 in. Hg.
4. The equipment descriptions listed in the section may not all be used on this project. Refer to the Equipment Schedules on the drawings for the specific application for each product or material. Products not shown on the schedule for the specific application may not be substituted without pre-approval from the Engineer. Where there is a conflict between the drawing schedules and specifications, the drawing schedules shall take precedent

5. Receiver:

a. Orientation: Vertical arrangement.
b. Pressure Rating: 100 psig minimum.
c. Interior Finish: Epoxy.
d. Drain: Automatic valve.

2.7 ROTARY, SLIDING-VANE VACUUM PUMPS

A. Oil-Free, Rotary, Sliding-Vane Vacuum Pumps:

1. Manufacturers: Subject to compliance with requirements, provide products by one of the following:

a. Allied Healthcare Products Inc.
b. Becker Pumps Corp.
c. Gardner Denver, Inc.

2. Description: Packaged unit.
3. Vacuum Pump(s): Nonpulsating, oil-free, rotary, sliding-vane type.

a. Cleanable inlet screens.

4. Outlet silencers on discharge connections.

B. Oil-Sealed, Rotary, Sliding-Vane Vacuum Pumps:

1. Manufacturers: Subject to compliance with requirements, provide products by one of the following:

a. Allied Healthcare Products Inc.

b. Becker Pumps Corp.
c. Ohio Medical Corporation.
d. Quincy Compressor.

2. Description: Packaged unit.
3. Vacuum Pumps: Nonpulsating, oil-sealed, rotary, sliding-vane type.

a. Cleanable inlet screens.
b. Outlet silencers and oil-mist separators on discharge connections.

4. Receiver: ASME construction steel tank with vacuum relief valve.

C. Capacities and Characteristics:

1. Vacuum Service: Medical WAGD Dental Medical laboratory Nonmedical laboratory vacuum.
2. Vacuum Pump(s): Three.
3. Vacuum Required: 26 in. Hg.
4. Mounting: Tank mounted.
5. The equipment descriptions listed in the section may not all be used on this project. Refer to the Equipment Schedules on the drawings for the specific application for each product or material. Products not shown on the schedule for the specific application may not be substituted without pre-approval from the Engineer. Where there is a conflict between the drawing schedules and specifications, the drawing schedules shall take precedent

6. Receiver:

a. Orientation: Vertical arrangement.
b. Pressure Rating: 100 psig minimum.
c. Interior Finish: Epoxy.
d. Drain: Automatic valve.

2.8 TURBINE EXHAUSTERS

A. Turbine Exhausters:

1. Manufacturers: Subject to compliance with requirements, provide products by the following:

a. Gardner Denver, Inc.

2. Electrical Components, Devices, and Accessories: Listed and labeled as defined in NFPA 70, by a qualified testing agency, and marked for intended location and application.
3. Comply with NFPA 99, "Health Care Facilities," for vacuum equipment and accessories for medical vacuum systems.
4. Comply with UL 544, "Medical and Dental Equipment," for medical vacuum equipment.
5. Description: Factory-assembled, -wired, -piped, -tested, and -packaged; electric-motor-driven; air-cooled; continuous-duty turbine exhausters and separators suitable for HVE applications and capable of producing not less than 12 in. Hg.
6. Control Panel: Automatic control station with load control and protection functions. Comply with NEMA ICS 2 and UL 508.

a. Enclosure: NEMA ICS 6, Type 12 control panel unless otherwise indicated.
b. Motor Controller: Full-voltage, combination-magnetic type with undervoltage release feature and motor-circuit-protector-type disconnecting means and short-circuit protective device.
c. Control Voltage: 120-V ac or less, using integral control power transformer.
d. Motor Overload Protection: Overload relay in each phase.
e. Starting Devices: Hand-off-automatic selector switch in cover of control panel, plus pilot device for automatic control.
f. Automatic control switches to alternate lead-lag turbine exhausters for duplex turbine exhausters.
g. Instrumentation: Include inlet turbine exhauster and separator vacuum gages, hour meter, discharge-air temperature gage, and control transformer.
h. Alarm Signal Device: For connection to alarm system to indicate when backup turbine exhauster is operating.
i. Air-Water Wet Separator: Vertical, steel tank constructed according to ASME Boiler and Pressure Vessel Code, Section VIII, Division 1; bearing appropriate code symbols; and shall withstand not less than 25 in. Hg.

1) Airflow Inlet: Tangential, in sidewall near top.
2) Wash-Down Assembly: Electric timer with devices to operate water spray nozzle.
3) Water Spray Nozzle: Water inlet connection and nozzle in top head.
4) Airflow Outlet: Centered, in top head.
5) Cleanout: Handhold, in sidewall near bottom.
6) Drain: Automatic type, and check valve in sidewall at bottom.
7) Safety Valve: Vacuum relief valve.
8) Gage: Vacuum gage, tank mounted or furnish for piping mounting.
9) Directional Flow Valve: For installation in separator inlet piping.
10) Silencer: For installation in turbine exhauster outlet piping.

7. Miscellaneous Devices: Safety valves, inlet vacuum gages, and shutoff valves.
8. Mounting Frame: Fabricate base and attachment to separator with reinforcement strong enough to resist packaged equipment movement during a seismic event when base is anchored to building structure.

B. Capacities and Characteristics:

1. Vacuum Service: HVE vacuum.
2. Turbine Exhauster(s): Two.
3. Vacuum Required: 10 in. Hg.
4. The equipment descriptions listed in the section may not all be used on this project. Refer to the Equipment Schedules on the drawings for the specific application for each product or material. Products not shown on the schedule for the specific application may not be substituted without pre-approval from the Engineer. Where there is a conflict between the drawing schedules and specifications, the drawing schedules shall take precedent

5. Separator:
a. Pressure Rating: 100 psig minimum.
b. Interior Finish: Epoxy.
c. Liquid-Level Sensors: Automatic electric or mechanical float switch to operate drain valve.

2.9 DIAPHRAGM VACUUM PUMPS

A. Diaphragm Vacuum Pumps:

1. Manufacturers: Subject to compliance with requirements, provide products by the following:

    a. Gardner Denver, Inc.

2. Description: Simplex, single-stage, oil-free, diaphragm vacuum pump.

    a. Option: Construction may be articulating-piston, reciprocating-piston, or rotary-sliding-vane type.

3. Control: Adjustable vacuum switch.
4. Cleanable inlet screen.
5. Outlet silencer and oil-mist separator on discharge.
6. Mounting: Freestanding.

B. Capacities and Characteristics:

1. Vacuum Service: laboratory vacuum.
2. Vacuum Pump:
3. Vacuum Required: 12 in. Hg.

2.10 DENTAL VACUUM PUMPS

A. Dental Vacuum Pumps:

1. Manufacturers: Subject to compliance with requirements, provide products by the following:

    a. CustomAir.

2. Description: Factory-assembled, -tested, and -packaged; duplex; automatic, dental vacuum system; suitable for dental applications and capable of producing not less than 12 in. Hg.
3. Simplex Vacuum Pump: For mounting on base or on floor.

    a. Vacuum Pump: Brass water-injection or liquid-ring type with rubber isolators on feet. Include fitting and tubing for circulation of approximately 80 percent of water through vacuum pump.
    b. Cabinet: Enameled steel; open construction with sound-insulated cover. Include control panel with adjustable vacuum control, manual on-off switch, on light, and vacuum gage.
    c. Dual-Voltage Control: Conversion unit for connection to 208- or 230-V ac power.
    d. Water Filter: For installation in inlet water supply.
    e. Backflow Preventer: Integral with unit or separate reduced-pressure-zone type for field installation in inlet-water supply piping. See Section 22 1119 "Domestic Water Piping Specialties" for separate backflow preventers.
    f. Check Valve: For installation in vacuum pump suction.
    g. Vacuum Relief Valve: For installation in vacuum pump suction.
    h. Air-Water Separator: With integral control to release wastewater when unit is shut

off.
i. Waste Muffler: For installation in vacuum pump waste piping.

4. Duplex Vacuum Pumps: For mounting on base or on floor.

a. Vacuum Pumps: Brass water-injection or liquid-ring type with rubber isolators on feet. Include fitting and tubing for circulation of approximately 80 percent of water through vacuum pump.
b. Cabinet: Enameled steel; open construction with sound-insulated cover. Include control panel with alternator, adjustable vacuum control for each vacuum pump, manual on-off switches, on light, and vacuum gage.
c. Dual-Voltage Control: Conversion unit for connection to 208- or 230-V ac power.
d. Water Filter: For installation in inlet water supply.
e. Backflow Preventer: Integral with unit or separate reduced-pressure-zone type for field installation in inlet-water supply piping. See Section 22 1319 "Sanitary Waste Piping Specialties" for separate backflow preventers.
f. Check Valves: For installation in each vacuum pump suction.
g. Vacuum Relief Valves: For installation in each vacuum pump suction.
h. Air-Water Separators: With integral control to release wastewater when unit is shut off.
i. Waste Mufflers: For installation in each vacuum pump waste piping.

B. Capacities and Characteristics:

1. Vacuum Service: Dental vacuum HVE.
2. Vacuum Pumps: Two.
3. Vacuum Required: 12 in. Hg.
4. The equipment descriptions listed in the section may not all be used on this project. Refer to the Equipment Schedules on the drawings for the specific application for each product or material. Products not shown on the schedule for the specific application may not be substituted without pre-approval from the Engineer. Where there is a conflict between the drawing schedules and specifications, the drawing schedules shall take precedent

2.11 DENTAL VACUUM PUMP CONTROL PANELS

A. Dental Vacuum Pump Control Panels:

1. Manufacturers: Subject to compliance with requirements, provide products by the following:

a. CustomAir.

2. Electrical Components, Devices, and Accessories: Listed and labeled as defined in NFPA 70, by a qualified testing agency, and marked for intended location and application.
3. Comply with NFPA 99, "Health Care Facilities," for vacuum equipment and accessories for medical vacuum systems.
4. Comply with UL 544, "Medical and Dental Equipment," for medical vacuum equipment.
5. Description: Wall-mounted type with visual indicators to indicate equipment in operation and to perform the following:

a. Shut off dental vacuum equipment.
b. Shut off water supply to dental vacuum equipment. Include solenoid-operated

valve for installation in water piping.

B. Control panels may be combined with dental air compressor control panels in single dental equipment control panels.

2.12 MOTORS

A. Comply with NEMA designation, temperature rating, service factor, and efficiency requirements for motors specified in Section 22 0513 "Common Motor Requirements for Plumbing Equipment."

1. Enclosure: Totally enclosed, fan cooled.
2. Enclosure Materials: Cast iron.
3. Unusual Service Conditions:

4. Efficiency: Premium efficient.

PART 3 - EXECUTION

3.1 PREPARATION

A. Clean vacuum equipment, accessories, and components that have not been cleaned for oxygen service and sealed or that are furnished unsuitable for laboratory vacuum and medical vacuum applications, according to CGA G4.1, "Cleaning Equipment for Oxygen Service."

3.2 VACUUM EQUIPMENT INSTALLATION

A. Install vacuum equipment for healthcare facilities according to ASSE 6010 and NFPA 99.

B. Equipment Mounting:

1. Install vacuum producers on cast-in-place concrete equipment base(s). Comply with requirements for equipment bases and foundations specified in Section 03 3000 "Cast-in-Place Concrete."
2. Comply with requirements for vibration isolation and seismic control devices specified in Section 22 0548 "Vibration and Seismic Controls for Plumbing Piping and Equipment"
3. Comply with requirements for vibration isolation devices specified in Section 22 0548.13 "Vibration Controls for Plumbing Piping and Equipment."

C. Install vacuum equipment anchored to substrate.

D. Orient equipment so controls and devices are accessible for servicing.

E. Maintain manufacturer's recommended clearances for service and maintenance.

F. Install the following devices on vacuum equipment:

1. Thermometer, Vacuum Gage, and Pressure Relief Valve: Install on each vacuum pump receiver.
2. Drain Valves: Install on receivers and separators. Discharge receiver condensate over

nearest floor drain. Discharge separator oral evacuation fluids by direct connection into sanitary waste piping system.

G. Dental Vacuum System Equipment Installation:

1. Install according to ASSE 6010 and NFPA 99.
2. Install dental vacuum system units on concrete bases with restrained elastomeric mounts with a minimum deflection of 2". Vibration isolation devices and installation requirements are specified in Section 22 0548 "Vibration and Seismic Controls for Plumbing Piping and Equipment."
3. Maintain manufacturer's recommended clearances for service and maintenance.
4. Install control panels for dental vacuum equipment on wall near equipment.

3.3 CONNECTIONS

A. Comply with requirements for water-supply piping specified in Section 22 1116 "Domestic Water Piping." Drawings indicate general arrangement of piping, fittings, and specialties.

B. Comply with requirements for drain piping specified in Section 22 1316 "Sanitary Waste and Vent Piping." Drawings indicate general arrangement of piping, fittings, and specialties.

C. Comply with requirements for vacuum piping specified in Section 22 6213 "Vacuum Piping for Laboratory and Healthcare Facilities." Drawings indicate general arrangement of piping, fittings, and specialties.

D. Where installing piping adjacent to equipment, allow space for service and maintenance.

E. Connect vacuum piping to vacuum equipment, accessories, and specialties with shutoff valve and union or flanged connection.

F. Connect water supply to vacuum equipment that requires water. Include backflow preventer. Backflow preventers are specified in Section 22 1119 "Domestic Water Piping Specialties."

3.4 IDENTIFICATION

A. Identify nonmedical laboratory vacuum equipment system components. Comply with requirements for identification specified in Section 22 0553 "Identification for Plumbing Piping and Equipment."

B. Identify medical vacuum equipment system components. Comply with requirements for identification specified in Section 22 0553 "Identification for Plumbing Piping and Equipment." and with NFPA 99.

3.5 FIELD QUALITY CONTROL FOR HEALTHCARE-FACILITY MEDICAL VACUUM EQUIPMENT

A. Testing Agency: Engage a qualified testing agency to perform tests and inspections.

B. Manufacturer's Field Service: Engage a factory-authorized service representative to test and inspect components, assemblies, and equipment installations, including connections.

C. Perform the following tests and inspections with the assistance of a factory-authorized service representative:

1. Medical Vacuum Equipment Testing Coordination: Perform tests, inspections, verifications, and certification of medical vacuum equipment concurrently with tests, inspections, and certification of medical compressed-air equipment medical compressed-air piping medical vacuum piping and medical gas piping systems.
2. Preparation: Perform medical vacuum equipment tests according to requirements in NFPA 99 for the following:

    a. System operation test.

3. Equipment Verification: Comply with requirements in ASSE 6020, ASSE 6030, and NFPA 99 for verification of medical vacuum equipment.
4. Replace damaged and malfunctioning controls and equipment.
5. Testing Certification: Certify that specified tests, inspections, and procedures have been performed and certify report results. Include the following:

    a. Inspections performed.
    b. Procedures and materials used.
    c. Test methods used.
    d. Results of tests.

D. Components will be considered defective if they do not pass tests and inspections.

E. Prepare test and inspection reports.

3.6 STARTUP SERVICE

A. Engage a factory-authorized service representative to perform startup service.

1. Complete installation and startup checks according to manufacturer's written instructions.
2. Check for lubricating oil in lubricated-type equipment.
3. Check belt drives for proper tension.
4. Verify that vacuum producer outlet piping is clear.
5. Check for equipment vibration-control supports and flexible pipe connectors and verify that equipment is properly attached to substrate.
6. Check safety valves for correct settings.
7. Check for proper seismic restraints.
8. Drain receiver and separator tank(s).
9. Operational Test: After electrical circuitry has been energized, start units to confirm proper motor rotation and unit operation.
10. Test and adjust controls and safeties.

B. Verify that vacuum equipment is installed and connected according to the Contract Documents.

C. Verify that electrical wiring installation complies with manufacturer's submittal and written installation requirements in electrical Sections.

D. Prepare written report documenting testing procedures and results.

3.7 DEMONSTRATION

A. Engage a factory-authorized service representative to train Owner's maintenance personnel to adjust, operate, and maintain vacuum producers.

END OF SECTION

SECTION 23 0513

COMMON MOTOR REQUIREMENTS FOR HVAC EQUIPMENT

PART 1 - GENERAL

1.1 RELATED DOCUMENTS

A. Drawings and general provisions of the Contract, including General and Supplementary Conditions and Division 01 Specification Sections, apply to this Section.

1.2 SUMMARY

A. Section includes general requirements for single-phase and polyphase, general-purpose, horizontal, small and medium, squirrel-cage induction motors for use on ac power systems up to 600 V and installed at equipment manufacturer's factory or shipped separately by equipment manufacturer for field installation.

1.3 COORDINATION

A. Coordinate features of motors, installed units, and accessory devices to be compatible with the following:

1. Motor controllers.
2. Torque, speed, and horsepower requirements of the load.
3. Ratings and characteristics of supply circuit and required control sequence.
4. Ambient and environmental conditions of installation location.

PART 2 - PRODUCTS

2.1 GENERAL MOTOR REQUIREMENTS

A. Comply with NEMA MG 1 unless otherwise indicated.

B. Comply with IEEE 841 for severe-duty motors.

2.2 MOTOR CHARACTERISTICS

A. Duty: Continuous duty at ambient temperature of 40 deg C and at altitude of 3300 feet above sea level.

B. Capacity and Torque Characteristics: Sufficient to start, accelerate, and operate connected loads at designated speeds, at installed altitude and environment, with indicated operating sequence, and without exceeding nameplate ratings or considering service factor.

2.3 POLYPHASE MOTORS

A. Description: NEMA MG 1, Design B, medium induction motor.

B. Efficiency: Energy efficient, as defined in NEMA MG 1.

C. Service Factor: 1.15.

D. Multispeed Motors: Variable torque.

1. For motors with 2:1 speed ratio, consequent pole, single winding.
2. For motors with other than 2:1 speed ratio, separate winding for each speed.

E. Multispeed Motors: Separate winding for each speed.

F. Rotor: Random-wound, squirrel cage.

G. Bearings: Regreasable, shielded, antifriction ball bearings suitable for radial and thrust loading.

H. Temperature Rise: Match insulation rating.

I. Insulation: Class F.

J. Code Letter Designation:

1. Motors 15 HP and Larger: NEMA starting Code F or Code G.
2. Motors Smaller than 15 HP: Manufacturer's standard starting characteristic.

K. Enclosure Material: Cast iron for motor frame sizes 324T and larger; rolled steel for motor frame sizes smaller than 324T.

2.4 POLYPHASE MOTORS WITH ADDITIONAL REQUIREMENTS

A. Motors Used with Reduced-Voltage and Multispeed Controllers: Match wiring connection requirements for controller with required motor leads. Provide terminals in motor terminal box, suited to control method.

B. Motors Used with Variable Frequency Controllers: Ratings, characteristics, and features coordinated with and approved by controller manufacturer.

1. Windings: Copper magnet wire with moisture-resistant insulation varnish, designed and tested to resist transient spikes, high frequencies, and short time rise pulses produced by pulse-width modulated inverters.
2. Energy- and Premium-Efficient Motors: Class B temperature rise; Class F insulation.
3. Inverter-Duty Motors: Class F temperature rise; Class H insulation.
4. Thermal Protection: Comply with NEMA MG 1 requirements for thermally protected motors.

2.5 SINGLE-PHASE MOTORS

A. Motors larger than 1/20 hp shall be one of the following, to suit starting torque and requirements of specific motor application:

1. Permanent-split capacitor.
2. Split phase.
3. Capacitor start, inductor run.
4. Capacitor start, capacitor run.

B. Bearings: Prelubricated, antifriction ball bearings or sleeve bearings suitable for radial and thrust loading.

C. Motors 1/20 HP and Smaller: Shaded-pole type.

D. Thermal Protection: Internal protection to automatically open power supply circuit to motor when winding temperature exceeds a safe value calibrated to temperature rating of motor insulation. Thermal-protection device shall automatically reset when motor temperature returns to normal range.

PART 3 - EXECUTION (Not Applicable)

END OF SECTION

SECTION 23 0517

SLEEVES AND SLEEVE SEALS FOR HVAC PIPING

PART 1 - GENERAL

1.1 SUMMARY

A. Section Includes:

1. Sleeves.
2. Sleeve-seal systems.
3. Grout.

1.2 ACTION SUBMITTALS

A. Product Data: For each type of product indicated.

PART 2 - PRODUCTS

2.1 SLEEVES

A. Cast-Iron Wall Pipes: Cast or fabricated of cast or ductile iron and equivalent to ductile-iron pressure pipe, with plain ends and integral waterstop unless otherwise indicated.

B. Galvanized-Steel Wall Pipes: ASTM A 53/A 53M, Schedule 40, with plain ends and welded steel collar; zinc coated.

C. Galvanized-Steel-Pipe Sleeves: ASTM A 53/A 53M, Type E, Grade B, Schedule 40, zinc coated, with plain ends.

D. PVC-Pipe Sleeves: ASTM D 1785, Schedule 40.

E. Galvanized-Steel-Sheet Sleeves: 0.0239-inch minimum thickness; round tube closed with welded longitudinal joint.

2.2 SLEEVE-SEAL SYSTEMS

A. Manufacturers: Subject to compliance with requirements, available manufacturers offering products that may be incorporated into the Work include, but are not limited to, the following:

1. Advance Products & Systems, Inc.
2. CALPICO, Inc.
3. Metraflex Company (The).
4. Pipeline Seal and Insulator, Inc.
5. Proco Products, Inc.

B. Description: Modular sealing-element unit, designed for field assembly, for filling annular space between piping and sleeve.

1. Sealing Elements: NBR interlocking links shaped to fit surface of pipe. Include type and number required for pipe material and size of pipe.
2. Pressure Plates: Carbon steel.
3. Connecting Bolts and Nuts: Carbon steel, with corrosion-resistant coating, of length required to secure pressure plates to sealing elements.

2.3 GROUT

A. Standard: ASTM C 1107/C 1107M, Grade B, post-hardening and volume-adjusting, dry, hydraulic-cement grout.

B. Characteristics: Nonshrink; recommended for interior and exterior applications.

C. Design Mix: 5000-psi, 28-day compressive strength.

D. Packaging: Premixed and factory packaged.

PART 3 - EXECUTION

3.1 SLEEVE INSTALLATION

A. Install sleeves for piping passing through penetrations in floors, partitions, roofs, and walls.

B. For sleeves that will have sleeve-seal system installed, select sleeves of size large enough to provide 1-inch annular clear space between piping and concrete slabs and walls.

1. Sleeves are not required for core-drilled holes.

C. Install sleeves in concrete floors, concrete roof slabs, and concrete walls as new slabs and walls are constructed.

1. Cut sleeves to length for mounting flush with both surfaces.

a. Exception: Extend sleeves installed in floors of mechanical equipment areas or other wet areas 2 inches above finished floor level.

2. Using grout, seal the space outside of sleeves in slabs and walls without sleeve-seal system.

D. Install sleeves for pipes passing through interior partitions.

1. Cut sleeves to length for mounting flush with both surfaces.
2. Install sleeves that are large enough to provide 1/4-inch annular clear space between sleeve and pipe or pipe insulation.
3. Seal annular space between sleeve and piping or piping insulation; use joint sealants appropriate for size, depth, and location of joint. Comply with requirements for sealants specified in Section 07 9200 "Joint Sealants."

E. Fire-Barrier Penetrations: Maintain indicated fire rating of walls, partitions, ceilings, and floors at pipe penetrations. Seal pipe penetrations with firestop materials. Comply with requirements for firestopping specified in Section 07 8413 "Penetration Firestopping."

3.2 SLEEVE-SEAL-SYSTEM INSTALLATION

A. Install sleeve-seal systems in sleeves in exterior concrete walls and slabs-on-grade at service piping entries into building.

B. Select type, size, and number of sealing elements required for piping material and size and for sleeve ID or hole size. Position piping in center of sleeve. Center piping in penetration, assemble sleeve-seal system components, and install in annular space between piping and sleeve. Tighten bolts against pressure plates that cause sealing elements to expand and make a watertight seal.

3.3 SLEEVE AND SLEEVE-SEAL SCHEDULE

A. Use sleeves and sleeve seals for the following piping-penetration applications:

1. Exterior Concrete Walls above Grade:

   a. Piping Smaller Than NPS 6: Galvanized-steel wall sleeves.
   b. Piping NPS 6 and Larger: Galvanized-steel wall sleeves.

2. Exterior Concrete Walls below Grade:

   a. Piping Smaller Than NPS 6: Cast-iron wall sleeves with sleeve-seal system.

      1) Select sleeve size to allow for 1-inch annular clear space between piping and sleeve for installing sleeve-seal system.

   b. Piping NPS 6 and Larger: Cast-iron wall sleeves with sleeve-seal system.

      1) Select sleeve size to allow for 1-inch annular clear space between piping and sleeve for installing sleeve-seal system.

3. Concrete Slabs above Grade:

   a. Piping Smaller Than NPS 6: Galvanized-steel-pipe sleeves.
   b. Piping NPS 6 and Larger: Galvanized-steel-pipe sleeves.

4. Interior Partitions:

   a. Piping Smaller Than NPS 6: Galvanized-steel-pipe sleeves.
   b. Piping NPS 6 and Larger: Galvanized-steel-sheet sleeves.

END OF SECTION

SECTION 23 0529

HANGERS AND SUPPORTS FOR HVAC PIPING AND EQUIPMENT

PART 1 - GENERAL

1.1 SUMMARY

A. Section Includes:

1. Metal pipe hangers and supports.
2. Trapeze pipe hangers.
3. Fastener systems.
4. Equipment supports.

1.2 ACTION SUBMITTALS

A. Product Data: For each type of product indicated.

B. Shop Drawings: Show fabrication and installation details and include calculations for the following; include Product Data for components:

1. Trapeze pipe hangers.
2. Equipment supports.

C. Delegated-Design Submittal: For trapeze hangers indicated to comply with performance requirements and design criteria, including analysis data signed and sealed by the qualified professional engineer responsible for their preparation.

1.3 INFORMATIONAL SUBMITTALS

A. Welding certificates.

1.4 QUALITY ASSURANCE

A. Structural Steel Welding Qualifications: Qualify procedures and personnel according to AWS D1.1/D1.1M, "Structural Welding Code - Steel."

B. Pipe Welding Qualifications: Qualify procedures and operators according to ASME Boiler and Pressure Vessel Code.

PART 2 - PRODUCTS

2.1 METAL PIPE HANGERS AND SUPPORTS

A. Carbon-Steel Pipe Hangers and Supports:

1. Description: MSS SP-58, Types 1 through 58, factory-fabricated components.
2. Galvanized Metallic Coatings: Pregalvanized or hot dipped.
3. Nonmetallic Coatings: Plastic coating, jacket, or liner.
4. Padded Hangers: Hanger with fiberglass or other pipe insulation pad or cushion to support bearing surface of piping.

5. Hanger Rods: Continuous-thread rod, nuts, and washer made of carbon steel.

B. Copper Pipe Hangers:

1. Description: MSS SP-58, Types 1 through 58, copper-coated-steel, factory-fabricated components.
2. Hanger Rods: Continuous-thread rod, nuts, and washer made of copper-coated steel.

2.2 TRAPEZE PIPE HANGERS

A. Description: MSS SP-69, Type 59, shop- or field-fabricated pipe-support assembly made from structural carbon-steel shapes with MSS SP-58 carbon-steel hanger rods, nuts, saddles, and U-bolts.

2.3 FASTENER SYSTEMS

A. Powder-Actuated Fasteners: Threaded-steel stud, for use in hardened portland cement concrete with pull-out, tension, and shear capacities appropriate for supported loads and building materials where used.

B. Mechanical-Expansion Anchors: Insert-wedge-type, zinc-coated steel anchors, for use in hardened portland cement concrete; with pull-out, tension, and shear capacities appropriate for supported loads and building materials where used.

2.4 EQUIPMENT SUPPORTS

A. Description: Welded, shop- or field-fabricated equipment support made from structural carbon-steel shapes.

2.5 MISCELLANEOUS MATERIALS

A. Structural Steel: ASTM A 36/A 36M, carbon-steel plates, shapes, and bars; black and galvanized.

B. Grout: ASTM C 1107, factory-mixed and -packaged, dry, hydraulic-cement, nonshrink and nonmetallic grout; suitable for interior and exterior applications.

1. Properties: Nonstaining, noncorrosive, and nongaseous.
2. Design Mix: 5000-psi, 28-day compressive strength.

PART 3 - EXECUTION

3.1 HANGER AND SUPPORT INSTALLATION

A. Metal Pipe-Hanger Installation: Comply with MSS SP-69 and MSS SP-89. Install hangers, supports, clamps, and attachments as required to properly support piping from the building structure.

B. Metal Trapeze Pipe-Hanger Installation: Comply with MSS SP-69 and MSS SP-89. Arrange for grouping of parallel runs of horizontal piping, and support together on field-fabricated trapeze pipe hangers.

1. Pipes of Various Sizes: Support together and space trapezes for smallest pipe size or install intermediate supports for smaller diameter pipes as specified for individual pipe

hangers.

2. Field fabricate from ASTM A 36/A 36M, carbon-steel shapes selected for loads being supported. Weld steel according to AWS D1.1/D1.1M.

C. Fastener System Installation:

1. Install powder-actuated fasteners for use in lightweight concrete or concrete slabs less than 4 inches thick in concrete after concrete is placed and completely cured. Use operators that are licensed by powder-actuated tool manufacturer. Install fasteners according to powder-actuated tool manufacturer's operating manual.
2. Install mechanical-expansion anchors in concrete after concrete is placed and completely cured. Install fasteners according to manufacturer's written instructions.

D. Install hangers and supports complete with necessary attachments, inserts, bolts, rods, nuts, washers, and other accessories.

E. Equipment Support Installation: Fabricate from welded-structural-steel shapes.

F. Install hangers and supports to allow controlled thermal movement of piping systems, to permit freedom of movement between pipe anchors, and to facilitate action of expansion joints, expansion loops, expansion bends, and similar units.

G. Install building attachments within concrete slabs or attach to structural steel. Install additional attachments at concentrated loads, including valves, flanges, and strainers, NPS 2-1/2 and larger and at changes in direction of piping. Install concrete inserts before concrete is placed; fasten inserts to forms and install reinforcing bars through openings at top of inserts.

H. Load Distribution: Install hangers and supports so that piping live and dead loads will not be transmitted to connected equipment.

I. Pipe Slopes: Install hangers and supports to provide indicated pipe slopes and to not exceed maximum pipe deflections allowed by ASME B31.9 for building services piping.

J. Insulated Piping:

1. Attach clamps and spacers to piping.

   a. Piping Operating above Ambient Air Temperature: Clamp may project through insulation.
   b. Piping Operating below Ambient Air Temperature: Use thermal-hanger shield insert with clamp sized to match OD of insert.
   c. Do not exceed pipe stress limits allowed by ASME B31.9 for building services piping.

2. Install MSS SP-58, Type 39, protection saddles if insulation without vapor barrier is indicated. Fill interior voids with insulation that matches adjoining insulation.

   a. Option: Thermal-hanger shield inserts may be used. Include steel weight-distribution plate for pipe NPS 4 and larger if pipe is installed on rollers.

3. Install MSS SP-58, Type 40, protective shields on cold piping with vapor barrier. Shields shall span an arc of 180 degrees.

   a. Option: Thermal-hanger shield inserts may be used. Include steel weight-

distribution plate for pipe NPS 4 and larger if pipe is installed on rollers.

4. Shield Dimensions for Pipe: Not less than the following:

   a. NPS 1/4 to NPS 3-1/2: 12 inches long and 0.048 inch thick.

   b. NPS 4: 12 inches long and 0.06 inch thick.

   c. NPS 5 and NPS 6: 18 inches long and 0.06 inch thick.

   d. NPS 8 to NPS 14: 24 inches long and 0.075 inch thick.

   e. NPS 16 to NPS 24: 24 inches long and 0.105 inch thick.

5. Pipes NPS 8 and Larger: Include wood or reinforced calcium-silicate-insulation inserts of length at least as long as protective shield.
6. Thermal-Hanger Shields: Install with insulation same thickness as piping insulation.

3.2 EQUIPMENT SUPPORTS

A. Fabricate structural-steel stands to suspend equipment from structure overhead or to support equipment above floor.

B. Grouting: Place grout under supports for equipment and make bearing surface smooth.

3.3 METAL FABRICATIONS

A. Cut, drill, and fit miscellaneous metal fabrications for trapeze pipe hangers and equipment supports.

B. Fit exposed connections together to form hairline joints. Field weld connections that cannot be shop welded because of shipping size limitations.

C. Field Welding: Comply with AWS D1.1/D1.1M procedures for shielded, metal arc welding; appearance and quality of welds; and methods used in correcting welding work; and with the following:

1. Use materials and methods that minimize distortion and develop strength and corrosion resistance of base metals.
2. Obtain fusion without undercut or overlap.
3. Remove welding flux immediately.
4. Finish welds at exposed connections so no roughness shows after finishing and so contours of welded surfaces match adjacent contours.

3.4 ADJUSTING

A. Hanger Adjustments: Adjust hangers to distribute loads equally on attachments and to achieve indicated slope of pipe.

B. Trim excess length of continuous-thread hanger and support rods to 1-1/2 inches.

3.5 PAINTING

A. Touchup: Clean field welds and abraded areas of shop paint. Paint exposed areas immediately after erecting hangers and supports. Use same materials as used for shop

painting. Comply with SSPC-PA 1 requirements for touching up field-painted surfaces.

1. Apply paint by brush or spray to provide a minimum dry film thickness of 2.0 mils.

B. Galvanized Surfaces: Clean welds, bolted connections, and abraded areas and apply galvanizing-repair paint to comply with ASTM A 780.

3.6 HANGER AND SUPPORT SCHEDULE

A. Specific hanger and support requirements are in Sections specifying piping systems and equipment.

B. Comply with MSS SP-69 for pipe-hanger selections and applications that are not specified in piping system Sections.

C. Use hangers and supports with galvanized metallic coatings for piping and equipment that will not have field-applied finish.

D. Use nonmetallic coatings on attachments for electrolytic protection where attachments are in direct contact with copper tubing.

E. Use carbon-steel pipe hangers and supports and metal trapeze pipe hangers and attachments for general service applications.

F. Use stainless-steel pipe hangers and stainless-steel or corrosion-resistant attachments for hostile environment applications.

G. Use copper-plated pipe hangers and copper or stainless-steel attachments for copper piping and tubing.

H. Use padded hangers for piping that is subject to scratching.

I. Use thermal-hanger shield inserts for insulated piping and tubing.

J. Horizontal-Piping Hangers and Supports: Unless otherwise indicated and except as specified in piping system Sections, install the following types:

1. Adjustable, Steel Clevis Hangers (MSS Type 1): For suspension of noninsulated or insulated, stationary pipes NPS 1/2 to NPS 30.
2. Yoke-Type Pipe Clamps (MSS Type 2): For suspension of up to 1050 deg F, pipes NPS 4 to NPS 24, requiring up to 4 inches of insulation.
3. Carbon- or Alloy-Steel, Double-Bolt Pipe Clamps (MSS Type 3): For suspension of pipes NPS 3/4 to NPS 36, requiring clamp flexibility and up to 4 inches of insulation.
4. Adjustable, Steel Band Hangers (MSS Type 7): For suspension of noninsulated, stationary pipes NPS 1/2 to NPS 8.
5. U-Bolts (MSS Type 24): For support of heavy pipes NPS 1/2 to NPS 30.
6. Pipe Saddle Supports (MSS Type 36): For support of pipes NPS 4 to NPS 36, with steel-pipe base stanchion support and cast-iron floor flange or carbon-steel plate.
7. Pipe Stanchion Saddles (MSS Type 37): For support of pipes NPS 4 to NPS 36, with steel-pipe base stanchion support and cast-iron floor flange or carbon-steel plate, and with U-bolt to retain pipe.
8. Single-Pipe Rolls (MSS Type 41): For suspension of pipes NPS 1 to NPS 30, from two rods if longitudinal movement caused by expansion and contraction might occur.
9. Complete Pipe Rolls (MSS Type 44): For support of pipes NPS 2 to NPS 42 if longitudinal movement caused by expansion and contraction might occur but vertical

adjustment is not necessary.

K. Vertical-Piping Clamps: Unless otherwise indicated and except as specified in piping system Sections, install the following types:

1. Extension Pipe or Riser Clamps (MSS Type 8): For support of pipe risers NPS 3/4 to NPS 24.
2. Carbon- or Alloy-Steel Riser Clamps (MSS Type 42): For support of pipe risers NPS 3/4 to NPS 24 if longer ends are required for riser clamps.

L. Hanger-Rod Attachments: Unless otherwise indicated and except as specified in piping system Sections, install the following types:

1. Steel Turnbuckles (MSS Type 13): For adjustment up to 6 inches for heavy loads.
2. Steel Clevises (MSS Type 14): For 120 to 450 deg F piping installations.

M. Building Attachments: Unless otherwise indicated and except as specified in piping system Sections, install the following types:

1. Steel or Malleable Concrete Inserts (MSS Type 18): For upper attachment to suspend pipe hangers from concrete ceiling.
2. Top-Beam C-Clamps (MSS Type 19): For use under roof installations with bar-joist construction, to attach to top flange of structural shape.
3. Side-Beam or Channel Clamps (MSS Type 20): For attaching to bottom flange of beams, channels, or angles.
4. Center-Beam Clamps (MSS Type 21): For attaching to center of bottom flange of beams.
5. Welded Beam Attachments (MSS Type 22): For attaching to bottom of beams if loads are considerable and rod sizes are large.
6. C-Clamps (MSS Type 23): For structural shapes.
7. Welded-Steel Brackets: For support of pipes from below, or for suspending from above by using clip and rod. Use one of the following for indicated loads:

    a. Light (MSS Type 31): 750 lb.
    b. Medium (MSS Type 32): 1500 lb.
    c. Heavy (MSS Type 33): 3000 lb.

8. Side-Beam Brackets (MSS Type 34): For sides of steel or wooden beams.
9. Plate Lugs (MSS Type 57): For attaching to steel beams if flexibility at beam is required.

N. Saddles and Shields: Unless otherwise indicated and except as specified in piping system Sections, install the following types:

1. Steel-Pipe-Covering Protection Saddles (MSS Type 39): To fill interior voids with insulation that matches adjoining insulation.
2. Protection Shields (MSS Type 40): Of length recommended in writing by manufacturer to prevent crushing insulation.
3. Thermal-Hanger Shield Inserts: For supporting insulated pipe.

O. Spring Hangers and Supports: Unless otherwise indicated and except as specified in piping system Sections, install the following types:

1. Spring Cushions (MSS Type 48): For light loads if vertical movement does not exceed 1-1/4 inches.
2. Spring-Cushion Roll Hangers (MSS Type 49): For equipping Type 41, roll hanger with springs.

3. Variable-Spring Base Supports (MSS Type 52): Preset to indicated load and limit variability factor to 25 percent to allow expansion and contraction of piping system from base support.

P. Comply with MSS SP-69 for trapeze pipe-hanger selections and applications that are not specified in piping system Sections.

Q. Use powder-actuated fasteners or mechanical-expansion anchors instead of building attachments where required in concrete construction.

END OF SECTION

SECTION 23 0548

VIBRATION AND SEISMIC CONTROLS FOR HVAC PIPING AND EQUIPMENT

PART 1 - GENERAL

1.1 SUMMARY

A. This Section includes the following:

1. Isolation pads.
2. Isolation mounts.
3. Restrained elastomeric isolation mounts.
4. Freestanding and restrained spring isolators.
5. Housed spring mounts.
6. Elastomeric hangers.
7. Spring hangers.
8. Spring hangers with vertical-limit stops.
9. Pipe riser resilient supports.
10. Resilient pipe guides.
11. Restraining braces and cables.

1.2 ACTION SUBMITTALS

A. Product Data: For each product indicated.

B. Delegated-Design Submittal: For vibration isolation and seismic-restraint calculations and details indicated to comply with performance requirements and design criteria, including analysis data signed and sealed by the qualified professional engineer responsible for their preparation.

1.3 INFORMATIONAL SUBMITTALS

A. Qualification Data: For professional engineer.

B. Welding certificates.

C. Field quality-control test reports.

1.4 QUALITY ASSURANCE

A. Welding: Qualify procedures and personnel according to AWS D1.1/D1.1M, "Structural Welding Code - Steel."

PART 2 - PRODUCTS

2.1 VIBRATION ISOLATORS

A. Available Manufacturers: Subject to compliance with requirements, manufacturers offering products that may be incorporated into the Work include, but are not limited to, the following:

B. Manufacturers: Subject to compliance with requirements, provide products by one of the following:

C. Basis-of-Design Product: Subject to compliance with requirements, provide the product indicated on Drawings or a comparable product by one of the following:
   1. Amber/Booth Company, Inc.
   2. Kinetics Noise Control.
   3. Mason Industries.
   4. Vibration Eliminator Co., Inc.

D. Pads: Arranged in single or multiple layers of sufficient stiffness for uniform loading over pad area, molded with a nonslip pattern and galvanized-steel baseplates, and factory cut to sizes that match requirements of supported equipment.

   1. Resilient Material: Oil- and water-resistant neoprene, rubber, or hermetically sealed compressed fiberglass.

E. Mounts: Double-deflection type, with molded, oil-resistant rubber, hermetically sealed compressed fiberglass, or neoprene isolator elements with factory-drilled, encapsulated top plate for bolting to equipment and with baseplate for bolting to structure. Color-code or otherwise identify to indicate capacity range.

   1. Materials: Cast-ductile-iron or welded steel housing containing two separate and opposing, oil-resistant rubber or neoprene elements that prevent central threaded element and attachment hardware from contacting the housing during normal operation.
   2. Neoprene: Shock-absorbing materials compounded according to the standard for bridge-bearing neoprene as defined by AASHTO.

F. Restrained Mounts: All-directional mountings with seismic restraint.

   1. Materials: Cast-ductile-iron or welded steel housing containing two separate and opposing, oil-resistant rubber or neoprene elements that prevent central threaded element and attachment hardware from contacting the housing during normal operation.
   2. Neoprene: Shock-absorbing materials compounded according to the standard for bridge-bearing neoprene as defined by AASHTO.

G. Spring Isolators: Freestanding, laterally stable, open-spring isolators.

   1. Outside Spring Diameter: Not less than 80 percent of the compressed height of the spring at rated load.
   2. Minimum Additional Travel: 50 percent of the required deflection at rated load.
   3. Lateral Stiffness: More than 80 percent of rated vertical stiffness.
   4. Overload Capacity: Support 200 percent of rated load, fully compressed, without deformation or failure.
   5. Baseplates: Factory drilled for bolting to structure and bonded to 1/4-inch-thick, rubber isolator pad attached to baseplate underside. Baseplates shall limit floor load to 500 psig.

6. Top Plate and Adjustment Bolt: Threaded top plate with adjustment bolt and cap screw to fasten and level equipment.

H. Restrained Spring Isolators: Freestanding, steel, open-spring isolators with seismic or limit-stop restraint.

1. Housing: Steel with resilient vertical-limit stops to prevent spring extension due to weight being removed; factory-drilled baseplate bonded to 1/4-inch-thick, neoprene or rubber isolator pad attached to baseplate underside; and adjustable equipment mounting and leveling bolt that acts as blocking during installation.
2. Restraint: Seismic or limit stop as required for equipment and authorities having jurisdiction.
3. Outside Spring Diameter: Not less than 80 percent of the compressed height of the spring at rated load.
4. Minimum Additional Travel: 50 percent of the required deflection at rated load.
5. Lateral Stiffness: More than 80 percent of rated vertical stiffness.
6. Overload Capacity: Support 200 percent of rated load, fully compressed, without deformation or failure.

I. Housed Spring Mounts: Housed spring isolator with integral seismic snubbers.

1. Housing: Ductile-iron or steel housing to provide all-directional seismic restraint.
2. Base: Factory drilled for bolting to structure.
3. Snubbers: Vertically adjustable to allow a maximum of 1/4-inch travel up or down before contacting a resilient collar.

J. Elastomeric Hangers: Single or double-deflection type, fitted with molded, oil-resistant elastomeric isolator elements bonded to steel housings with threaded connections for hanger rods. Color-code or otherwise identify to indicate capacity range.

K. Spring Hangers: Combination coil-spring and elastomeric-insert hanger with spring and insert in compression.

1. Frame: Steel, fabricated for connection to threaded hanger rods and to allow for a maximum of 30 degrees of angular hanger-rod misalignment without binding or reducing isolation efficiency.
2. Outside Spring Diameter: Not less than 80 percent of the compressed height of the spring at rated load.
3. Minimum Additional Travel: 50 percent of the required deflection at rated load.
4. Lateral Stiffness: More than 80 percent of rated vertical stiffness.
5. Overload Capacity: Support 200 percent of rated load, fully compressed, without deformation or failure.
6. Elastomeric Element: Molded, oil-resistant rubber or neoprene. Steel-washer-reinforced cup to support spring and bushing projecting through bottom of frame.
7. Self-centering hanger rod cap to ensure concentricity between hanger rod and support spring coil.

L. Spring Hangers with Vertical-Limit Stop: Combination coil-spring and elastomeric-insert hanger with spring and insert in compression and with a vertical-limit stop.

1. Frame: Steel, fabricated for connection to threaded hanger rods and to allow for a maximum of 30 degrees of angular hanger-rod misalignment without binding or reducing isolation efficiency.
2. Outside Spring Diameter: Not less than 80 percent of the compressed height of the spring at rated load.

3. Minimum Additional Travel: 50 percent of the required deflection at rated load.
4. Lateral Stiffness: More than 80 percent of rated vertical stiffness.
5. Overload Capacity: Support 200 percent of rated load, fully compressed, without deformation or failure.
6. Elastomeric Element: Molded, oil-resistant rubber or neoprene.
7. Adjustable Vertical Stop: Steel washer with neoprene washer "up-stop" on lower threaded rod.
8. Self-centering hanger rod cap to ensure concentricity between hanger rod and support spring coil.

M. Pipe Riser Resilient Support: All-directional, acoustical pipe anchor consisting of 2 steel tubes separated by a minimum of 1/2-inch-thick neoprene. Include steel and neoprene vertical-limit stops arranged to prevent vertical travel in both directions. Design support for a maximum load on the isolation material of 500 psig and for equal resistance in all directions.

N. Resilient Pipe Guides: Telescopic arrangement of 2 steel tubes or post and sleeve arrangement separated by a minimum of 1/2-inch-thick neoprene. Where clearances are not readily visible, a factory-set guide height with a shear pin to allow vertical motion due to pipe expansion and contraction shall be fitted. Shear pin shall be removable and reinsertable to allow for selection of pipe movement. Guides shall be capable of motion to meet location requirements.

PART 3 - EXECUTION

3.1 APPLICATIONS

A. Multiple Pipe Supports: Secure pipes to trapeze member with clamps approved for application by an agency acceptable to authorities having jurisdiction.

B. Hanger Rod Stiffeners: Install hanger rod stiffeners where indicated or scheduled on Drawings to receive them and where required to prevent buckling of hanger rods due to seismic forces.

C. Strength of Support and Seismic-Restraint Assemblies: Where not indicated, select sizes of components so strength will be adequate to carry present and future static and seismic loads within specified loading limits.

3.2 VIBRATION-CONTROL AND SEISMIC-RESTRAINT DEVICE INSTALLATION

A. Comply with requirements in Section 07 7200 "Roof Accessories" for installation of roof curbs, equipment supports, and roof penetrations.

B. Install cables so they do not bend across edges of adjacent equipment or building structure.

C. Install bushing assemblies for anchor bolts for floor-mounted equipment, arranged to provide resilient media between anchor bolt and mounting hole in concrete base.

D. Attachment to Structure: If specific attachment is not indicated, anchor bracing to structure at flanges of beams, at upper truss chords of bar joists, or at concrete members.

E. Drilled-in Anchors:

1. Identify position of reinforcing steel and other embedded items prior to drilling holes for anchors. Do not damage existing reinforcing or embedded items during coring or drilling. Notify the structural engineer if reinforcing steel or other embedded items are encountered during drilling. Locate and avoid prestressed tendons, electrical and telecommunications conduit, and gas lines.
2. Do not drill holes in concrete or masonry until concrete, mortar, or grout has achieved full design strength.
3. Wedge Anchors: Protect threads from damage during anchor installation. Heavy-duty sleeve anchors shall be installed with sleeve fully engaged in the structural element to which anchor is to be fastened.
4. Set anchors to manufacturer's recommended torque, using a torque wrench.
5. Install zinc-coated steel anchors for interior and stainless-steel anchors for exterior applications.

3.3 FIELD QUALITY CONTROL

A. Perform tests and inspections.

B. Tests and Inspections:

1. Provide evidence of recent calibration of test equipment by a testing agency acceptable to authorities having jurisdiction.
2. Schedule test with Owner, through Architect, before connecting anchorage device to restrained component (unless postconnection testing has been approved), and with at least seven days' advance notice.
3. Obtain Architect's approval before transmitting test loads to structure. Provide temporary load-spreading members.
4. Test at least four of each type and size of installed anchors and fasteners selected by Architect.
5. Test to 90 percent of rated proof load of device.
6. Measure isolator restraint clearance.
7. Measure isolator deflection.
8. If a device fails test, modify all installations of same type and retest until satisfactory results are achieved.

C. Remove and replace malfunctioning units and retest as specified above.

D. Prepare test and inspection reports.

3.4 ADJUSTING

A. Adjust isolators after piping system is at operating weight.

B. Adjust limit stops on restrained spring isolators to mount equipment at normal operating height. After equipment installation is complete, adjust limit stops so they are out of contact during normal operation.

C. Adjust active height of spring isolators.

D. Adjust restraints to permit free movement of equipment within normal mode of operation.

3.5 HVAC VIBRATION-CONTROL AND SEISMIC-RESTRAINT DEVICE SCHEDULE

A. Supported or Suspended Equipment: Refer to drawings for equipment vibration isolators.

END OF SECTION

SECTION 23 0553

IDENTIFICATION FOR HVAC PIPING AND EQUIPMENT

PART 1 - GENERAL

1.1 SUMMARY

A. Section Includes:

1. Equipment labels.
2. Warning signs and labels.
3. Pipe labels.
4. Duct labels.
5. Valve tags.

1.2 ACTION SUBMITTAL

A. Product Data: For each type of product indicated.

B. Equipment Label Schedule: Include a listing of all equipment to be labeled with the proposed content for each label.

C. Valve numbering scheme.

D. Valve Schedules: For each piping system to include in maintenance manuals.

PART 2 - PRODUCTS

2.1 EQUIPMENT LABELS

A. Plastic Labels for Equipment:

1. Material and Thickness: Multilayer, multicolor, plastic labels for mechanical engraving, 1/16 inch thick, and having predrilled holes for attachment hardware.
2. Letter Color: White.
3. Background Color: Black.
4. Maximum Temperature: Able to withstand temperatures up to 160 deg F.
5. Minimum Label Size: Length and width vary for required label content, but not less than 2-1/2 by 3/4 inch.
6. Minimum Letter Size: 1/4 inch for name of units if viewing distance is less than 24 inches, 1/2 inch for viewing distances up to 72 inches, and proportionately larger lettering for greater viewing distances. Include secondary lettering two-thirds to three-fourths the size of principal lettering.
7. Fasteners: Stainless-steel rivets or self-tapping screws.
8. Adhesive: Contact-type permanent adhesive, compatible with label and with substrate.

B. Label Content: Include equipment's Drawing designation or unique equipment number, Drawing numbers where equipment is indicated (plans, details, and schedules), plus the

Specification Section number and title where equipment is specified.

C. Equipment Label Schedule: For each item of equipment to be labeled, on 8-1/2-by-11-inch bond paper. Tabulate equipment identification number and identify Drawing numbers where equipment is indicated (plans, details, and schedules), plus the Specification Section number and title where equipment is specified. Equipment schedule shall be included in operation and maintenance data.

2.2 WARNING SIGNS AND LABELS

A. Material and Thickness: Multilayer, multicolor, plastic labels for mechanical engraving, 1/16 inch thick, and having predrilled holes for attachment hardware.

B. Letter Color: Black.

C. Background Color: Yellow.

D. Maximum Temperature: Able to withstand temperatures up to 160 deg F.

E. Minimum Label Size: Length and width vary for required label content, but not less than 2-1/2 by 3/4 inch.

F. Minimum Letter Size: 1/4 inch for name of units if viewing distance is less than 24 inches, 1/2 inch for viewing distances up to 72 inches, and proportionately larger lettering for greater viewing distances. Include secondary lettering two-thirds to three-fourths the size of principal lettering.

G. Fasteners: Stainless-steel rivets or self-tapping screws.

H. Adhesive: Contact-type permanent adhesive, compatible with label and with substrate.

I. Label Content: Include caution and warning information, plus emergency notification instructions.

2.3 PIPE LABELS

A. General Requirements for Manufactured Pipe Labels: Preprinted, color-coded, with lettering indicating service, and showing flow direction.

B. Pretensioned Pipe Labels: Precoiled, semirigid plastic formed to cover full circumference of pipe and to attach to pipe without fasteners or adhesive.

C. Self-Adhesive Pipe Labels: Printed plastic with contact-type, permanent-adhesive backing.

D. Pipe Label Contents: Include identification of piping service using same designations or abbreviations as used on Drawings, pipe size, and an arrow indicating flow direction.

1. Flow-Direction Arrows: Integral with piping system service lettering to accommodate both directions, or as separate unit on each pipe label to indicate flow direction.
2. Lettering Size: At least 1-1/2 inches high.

2.4 VALVE TAGS

A. Valve Tags: Stamped or engraved with 1/4-inch letters for piping system abbreviation and 1/2-inch numbers.

1. Tag Material: Brass, 0.032-inch Stainless steel, 0.025-inch Aluminum, 0.032-inch or anodized aluminum, 0.032-inch minimum thickness, and having predrilled or stamped holes for attachment hardware.
2. Fasteners: Brass wire-link or beaded chain; or S-hook.

B. Valve Schedules: For each piping system, on 8-1/2-by-11-inch bond paper. Tabulate valve number, piping system, system abbreviation (as shown on valve tag), location of valve (room or space), normal-operating position (open, closed, or modulating), and variations for identification. Mark valves for emergency shutoff and similar special uses.

1. Valve-tag schedule shall be included in operation and maintenance data.

PART 3 - EXECUTION

3.1 PREPARATION

A. Clean piping and equipment surfaces of substances that could impair bond of identification devices, including dirt, oil, grease, release agents, and incompatible primers, paints, and encapsulants.

3.2 EQUIPMENT LABEL INSTALLATION

A. Install or permanently fasten labels on each major item of mechanical equipment.

B. Locate equipment labels where accessible and visible.

3.3 PIPE LABEL INSTALLATION

A. Locate pipe labels where piping is exposed or above accessible ceilings in finished spaces; machine rooms; accessible maintenance spaces such as shafts, tunnels, and plenums; and exterior exposed locations as follows:

1. Near each valve and control device.
2. Near each branch connection, excluding short takeoffs for fixtures and terminal units. Where flow pattern is not obvious, mark each pipe at branch.
3. Near penetrations through walls, floors, ceilings, and inaccessible enclosures.
4. At access doors, manholes, and similar access points that permit view of concealed piping.
5. Near major equipment items and other points of origination and termination.
6. Spaced at maximum intervals of 50 feet along each run. Reduce intervals to 25 feet in areas of congested piping and equipment.
7. On piping above removable acoustical ceilings. Omit intermediately spaced labels.

3.4 VALVE-TAG INSTALLATION

A. Install tags on valves and control devices in piping systems, except check valves; valves within factory-fabricated equipment units; shutoff valves; faucets; convenience and lawn-watering hose connections; and HVAC terminal devices and similar roughing-in connections of end-use fixtures and units. List tagged valves in a valve schedule.

END OF SECTION

SECTION 23 0593

TESTING, ADJUSTING, AND BALANCING FOR HVAC

PART 1 - GENERAL

1.1 SUMMARY

A. Section Includes:

1. Balancing Air Systems:

   a. Constant-volume air systems.
   b. Variable-air-volume systems.

2. Balancing Hydronic Piping Systems:

   a. Constant-flow hydronic systems.
   b. Variable-flow hydronic systems.

1.2 DEFINITIONS

A. AABC: Associated Air Balance Council.

B. NEBB: National Environmental Balancing Bureau.

C. TAB: Testing, adjusting, and balancing.

D. TABB: Testing, Adjusting, and Balancing Bureau.

E. TAB Specialist: An entity engaged to perform TAB Work.

1.3 INFORMATIONAL SUBMITTALS

A. Strategies and Procedures Plan: Within 60 days of Contractor's Notice to Proceed, submit TAB strategies and step-by-step procedures as specified in "Preparation" Article.

B. Certified TAB reports.

1.4 QUALITY ASSURANCE

A. TAB Contractor Qualifications: Engage an Independent TAB entity certified by AABC, NEBB, or TABB.

B. Certify TAB field data reports and perform the following:

1. Review field data reports to validate accuracy of data and to prepare certified TAB reports.
2. Certify that the TAB team complied with the approved TAB plan and the procedures specified and referenced in this Specification.

C. TAB Report Forms: Use standard TAB contractor's forms approved by Architect.

D. Instrumentation Type, Quantity, Accuracy, and Calibration: As described in ASHRAE 111, Section 5, "Instrumentation."

E. ASHRAE Compliance: Applicable requirements in ASHRAE 62.1-2007, Section 7.2.2 - "Air Balancing."

F. ASHRAE/IESNA Compliance: Applicable requirements in ASHRAE/IESNA 90.1-2007, Section 6.7.2.3 - "System Balancing."

PART 2 - PRODUCTS (Not Applicable)

PART 3 - EXECUTION

3.1 EXAMINATION

A. Examine the Contract Documents to become familiar with Project requirements and to discover conditions in systems' designs that may preclude proper TAB of systems and equipment.

B. Examine systems for installed balancing devices, such as test ports, gage cocks, thermometer wells, flow-control devices, balancing valves and fittings, and manual volume dampers. Verify that locations of these balancing devices are accessible.

C. Examine the approved submittals for HVAC systems and equipment.

D. Examine design data including HVAC system descriptions, statements of design assumptions for environmental conditions and systems' output, and statements of philosophies and assumptions about HVAC system and equipment controls.

E. Examine ceiling plenums and underfloor air plenums used for supply, return, or relief air to verify that they meet the leakage class of connected ducts as specified in Section 23 3113 "Metal Ducts" and are properly separated from adjacent areas. Verify that penetrations in plenum walls are sealed and fire-stopped if required.

F. Examine equipment performance data including fan and pump curves.

1. Relate performance data to Project conditions and requirements, including system effects that can create undesired or unpredicted conditions that cause reduced capacities in all or part of a system.
2. Calculate system-effect factors to reduce performance ratings of HVAC equipment when installed under conditions different from the conditions used to rate equipment performance. To calculate system effects for air systems, use tables and charts found in AMCA 201, "Fans and Systems," or in SMACNA's "HVAC Systems - Duct Design." Compare results with the design data and installed conditions.

G. Examine system and equipment installations and verify that field quality-control testing, cleaning, and adjusting specified in individual Sections have been performed.

H. Examine test reports specified in individual system and equipment Sections.

I. Examine HVAC equipment and filters and verify that bearings are greased, belts are aligned and tight, and equipment with functioning controls is ready for operation.

J. Examine terminal units, such as variable-air-volume boxes, and verify that they are accessible

and their controls are connected and functioning.

K. Examine strainers. Verify that startup screens are replaced by permanent screens with indicated perforations.

L. Examine three-way valves for proper installation for their intended function of diverting or mixing fluid flows.

M. Examine heat-transfer coils for correct piping connections and for clean and straight fins.

N. Examine system pumps to ensure absence of entrained air in the suction piping.

O. Examine operating safety interlocks and controls on HVAC equipment.

P. Report deficiencies discovered before and during performance of TAB procedures. Observe and record system reactions to changes in conditions. Record default set points if different from indicated values.

3.2 PREPARATION

A. Prepare a TAB plan that includes strategies and step-by-step procedures.

B. Complete system-readiness checks and prepare reports. Verify the following:

1. Permanent electrical-power wiring is complete.
2. Hydronic systems are filled, clean, and free of air.
3. Automatic temperature-control systems are operational.
4. Equipment and duct access doors are securely closed.
5. Balance, smoke, and fire dampers are open.
6. Isolating and balancing valves are open and control valves are operational.
7. Ceilings are installed in critical areas where air-pattern adjustments are required and access to balancing devices is provided.
8. Windows and doors can be closed so indicated conditions for system operations can be met.

3.3 GENERAL PROCEDURES FOR TESTING AND BALANCING

A. Perform testing and balancing procedures on each system according to the procedures contained in AABC's "National Standards for Total System Balance" or NEBB's "Procedural Standards for Testing, Adjusting, and Balancing of Environmental Systems" and in this Section.

1. Comply with requirements in ASHRAE 62.1-2007, Section 7.2.2 - "Air Balancing."

B. Cut insulation, ducts, pipes, and equipment cabinets for installation of test probes to the minimum extent necessary for TAB procedures.

1. After testing and balancing, patch probe holes in ducts with same material and thickness as used to construct ducts.
2. Install and join new insulation that matches removed materials. Restore insulation, coverings, vapor barrier, and finish according to Section 23 0713 "Duct Insulation," Section 23 0716 "HVAC Equipment Insulation," Section 23 0719 "HVAC Piping Insulation."

C. Mark equipment and balancing devices, including damper-control positions, valve position indicators, fan-speed-control levers, and similar controls and devices, with paint or other

suitable, permanent identification material to show final settings.

D. Take and report testing and balancing measurements in inch-pound (IP) units.

3.4 GENERAL PROCEDURES FOR BALANCING AIR SYSTEMS

A. Prepare test reports for both fans and outlets. Obtain manufacturer's outlet factors and recommended testing procedures. Crosscheck the summation of required outlet volumes with required fan volumes.

B. Prepare schematic diagrams of systems' "as-built" duct layouts.

C. For variable-air-volume systems, develop a plan to simulate diversity.

D. Determine the best locations in main and branch ducts for accurate duct-airflow measurements.

E. Check airflow patterns from the outdoor-air louvers and dampers and the return- and exhaust-air dampers through the supply-fan discharge and mixing dampers.

F. Locate start-stop and disconnect switches, electrical interlocks, and motor starters.

G. Verify that motor starters are equipped with properly sized thermal protection.

H. Check dampers for proper position to achieve desired airflow path.

I. Check for airflow blockages.

J. Check condensate drains for proper connections and functioning.

K. Check for proper sealing of air-handling-unit components.

L. Verify that air duct system is sealed as specified in Section 23 3113 "Metal Ducts."

3.5 PROCEDURES FOR CONSTANT-VOLUME AIR SYSTEMS

A. Adjust fans to deliver total indicated airflows within the maximum allowable fan speed listed by fan manufacturer.

1. Measure total airflow.

    a. Where sufficient space in ducts is unavailable for Pitot-tube traverse measurements, measure airflow at terminal outlets and inlets and calculate the total airflow.

2. Measure fan static pressures as follows to determine actual static pressure:

    a. Measure outlet static pressure as far downstream from the fan as practical and upstream from restrictions in ducts such as elbows and transitions.
    b. Measure static pressure directly at the fan outlet or through the flexible connection.
    c. Measure inlet static pressure of single-inlet fans in the inlet duct as near the fan as possible, upstream from the flexible connection, and downstream from duct restrictions.
    d. Measure inlet static pressure of double-inlet fans through the wall of the plenum that houses the fan.

3. Measure static pressure across each component that makes up an air-handling unit, rooftop unit, and other air-handling and -treating equipment.

    a. Report the cleanliness status of filters and the time static pressures are measured.

4. Measure static pressures entering and leaving other devices, such as sound traps, heat-recovery equipment, and air washers, under final balanced conditions.
5. Review Record Documents to determine variations in design static pressures versus actual static pressures. Calculate actual system-effect factors. Recommend adjustments to accommodate actual conditions.
6. Obtain approval from Architect for adjustment of fan speed higher or lower than indicated speed. Comply with requirements in Sections for air-handling units for adjustment of fans, belts, and pulley sizes to achieve indicated air-handling-unit performance.
7. Do not make fan-speed adjustments that result in motor overload. Consult equipment manufacturers about fan-speed safety factors. Modulate dampers and measure fan-motor amperage to ensure that no overload will occur. Measure amperage in full-cooling, full-heating, economizer, and any other operating mode to determine the maximum required brake horsepower.

B. Adjust volume dampers for main duct, submain ducts, and major branch ducts to indicated airflows within specified tolerances.

1. Measure airflow of submain and branch ducts.

    a. Where sufficient space in submain and branch ducts is unavailable for Pitot-tube traverse measurements, measure airflow at terminal outlets and inlets and calculate the total airflow for that zone.

2. Measure static pressure at a point downstream from the balancing damper, and adjust volume dampers until the proper static pressure is achieved.
3. Remeasure each submain and branch duct after all have been adjusted. Continue to adjust submain and branch ducts to indicated airflows within specified tolerances.

C. Measure air outlets and inlets without making adjustments.

1. Measure terminal outlets using a direct-reading hood or outlet manufacturer's written instructions and calculating factors.

D. Adjust air outlets and inlets for each space to indicated airflows within specified tolerances of indicated values. Make adjustments using branch volume dampers rather than extractors and the dampers at air terminals.

1. Adjust each outlet in same room or space to within specified tolerances of indicated quantities without generating noise levels above the limitations prescribed by the Contract Documents.
2. Adjust patterns of adjustable outlets for proper distribution without drafts.

3.6 PROCEDURES FOR VARIABLE-AIR-VOLUME SYSTEMS

A. Compensating for Diversity: When the total airflow of all terminal units is more than the indicated airflow of the fan, place a selected number of terminal units at a minimum set-point airflow with the remainder at maximum airflow condition until the total airflow of the terminal units equals the indicated airflow of the fan. Select the reduced-airflow terminal units so they are distributed evenly among the branch ducts.

B. Pressure-Independent, Variable-Air-Volume Systems: After the fan systems have been adjusted, adjust the variable-air-volume systems as follows:

1. Set outdoor-air dampers at minimum, and set return- and exhaust-air dampers at a position that simulates full-cooling load.
2. Select the terminal unit that is most critical to the supply-fan airflow and static pressure. Measure static pressure. Adjust system static pressure so the entering static pressure for the critical terminal unit is not less than the sum of the terminal-unit manufacturer's recommended minimum inlet static pressure plus the static pressure needed to overcome terminal-unit discharge system losses.
3. Measure total system airflow. Adjust to within indicated airflow.
4. Set terminal units at maximum airflow and adjust controller or regulator to deliver the designed maximum airflow. Use terminal-unit manufacturer's written instructions to make this adjustment. When total airflow is correct, balance the air outlets downstream from terminal units the same as described for constant-volume air systems.
5. Set terminal units at minimum airflow and adjust controller or regulator to deliver the designed minimum airflow. Check air outlets for a proportional reduction in airflow the same as described for constant-volume air systems.

    a. If air outlets are out of balance at minimum airflow, report the condition but leave outlets balanced for maximum airflow.

6. Remeasure the return airflow to the fan while operating at maximum return airflow and minimum outdoor airflow.

    a. Adjust the fan and balance the return-air ducts and inlets the same as described for constant-volume air systems.

7. Measure static pressure at the most critical terminal unit and adjust the static-pressure controller at the main supply-air sensing station to ensure that adequate static pressure is maintained at the most critical unit.
8. Record final fan-performance data.

C. Pressure-Dependent, Variable-Air-Volume Systems without Diversity: After the fan systems have been adjusted, adjust the variable-air-volume systems as follows:

1. Balance variable-air-volume systems the same as described for constant-volume air systems.
2. Set terminal units and supply fan at full-airflow condition.
3. Adjust inlet dampers of each terminal unit to indicated airflow and verify operation of the static-pressure controller. When total airflow is correct, balance the air outlets downstream from terminal units the same as described for constant-volume air systems.
4. Readjust fan airflow for final maximum readings.
5. Measure operating static pressure at the sensor that controls the supply fan if one is installed, and verify operation of the static-pressure controller.
6. Set supply fan at minimum airflow if minimum airflow is indicated. Measure static pressure to verify that it is being maintained by the controller.
7. Set terminal units at minimum airflow and adjust controller or regulator to deliver the designed minimum airflow. Check air outlets for a proportional reduction in airflow the same as described for constant-volume air systems.

    a. If air outlets are out of balance at minimum airflow, report the condition but leave the outlets balanced for maximum airflow.

8. Measure the return airflow to the fan while operating at maximum return airflow and

minimum outdoor airflow.

a. Adjust the fan and balance the return-air ducts and inlets the same as described for constant-volume air systems.

D. Pressure-Dependent, Variable-Air-Volume Systems with Diversity: After the fan systems have been adjusted, adjust the variable-air-volume systems as follows:

1. Set system at maximum indicated airflow by setting the required number of terminal units at minimum airflow. Select the reduced-airflow terminal units so they are distributed evenly among the branch ducts.
2. Adjust supply fan to maximum indicated airflow with the variable-airflow controller set at maximum airflow.
3. Set terminal units at full-airflow condition.
4. Adjust terminal units starting at the supply-fan end of the system and continuing progressively to the end of the system. Adjust inlet dampers of each terminal unit to indicated airflow. When total airflow is correct, balance the air outlets downstream from terminal units the same as described for constant-volume air systems.
5. Adjust terminal units for minimum airflow.
6. Measure static pressure at the sensor.
7. Measure the return airflow to the fan while operating at maximum return airflow and minimum outdoor airflow. Adjust the fan and balance the return-air ducts and inlets the same as described for constant-volume air systems.

3.7 GENERAL PROCEDURES FOR HYDRONIC SYSTEMS

A. Prepare test reports with pertinent design data, and number in sequence starting at pump to end of system. Check the sum of branch-circuit flows against the approved pump flow rate. Correct variations that exceed plus or minus 5 percent.

B. Prepare schematic diagrams of systems' "as-built" piping layouts.

C. Prepare hydronic systems for testing and balancing according to the following, in addition to the general preparation procedures specified above:

1. Open all manual valves for maximum flow.
2. Check liquid level in expansion tank.
3. Check makeup water-station pressure gage for adequate pressure for highest vent.
4. Check flow-control valves for specified sequence of operation, and set at indicated flow.
5. Set differential-pressure control valves at the specified differential pressure. Do not set at fully closed position when pump is positive-displacement type unless several terminal valves are kept open.
6. Set system controls so automatic valves are wide open to heat exchangers.
7. Check pump-motor load. If motor is overloaded, throttle main flow-balancing device so motor nameplate rating is not exceeded.
8. Check air vents for a forceful liquid flow exiting from vents when manually operated.

3.8 PROCEDURES FOR CONSTANT-FLOW HYDRONIC SYSTEMS

A. Measure water flow at pumps. Use the following procedures except for positive-displacement pumps:

1. Verify impeller size by operating the pump with the discharge valve closed. Read pressure differential across the pump. Convert pressure to head and correct for differences in gage heights. Note the point on manufacturer's pump curve at zero flow

and verify that the pump has the intended impeller size.

a. If impeller sizes must be adjusted to achieve pump performance, obtain approval from Architect and comply with requirements in Section 23 2123 "Hydronic Pumps."

2. Check system resistance. With all valves open, read pressure differential across the pump and mark pump manufacturer's head-capacity curve. Adjust pump discharge valve until indicated water flow is achieved.

a. Monitor motor performance during procedures and do not operate motors in overload conditions.

3. Verify pump-motor brake horsepower. Calculate the intended brake horsepower for the system based on pump manufacturer's performance data. Compare calculated brake horsepower with nameplate data on the pump motor. Report conditions where actual amperage exceeds motor nameplate amperage.
4. Report flow rates that are not within plus or minus 10 percent of design.

B. Measure flow at all automatic flow control valves to verify that valves are functioning as designed.

C. Measure flow at all pressure-independent characterized control valves, with valves in fully open position, to verify that valves are functioning as designed.

D. Set calibrated balancing valves, if installed, at calculated presettings.

E. Measure flow at all stations and adjust, where necessary, to obtain first balance.

1. System components that have Cv rating or an accurately cataloged flow-pressure-drop relationship may be used as a flow-indicating device.

F. Measure flow at main balancing station and set main balancing device to achieve flow that is 5 percent greater than indicated flow.

G. Adjust balancing stations to within specified tolerances of indicated flow rate as follows:

1. Determine the balancing station with the highest percentage over indicated flow.
2. Adjust each station in turn, beginning with the station with the highest percentage over indicated flow and proceeding to the station with the lowest percentage over indicated flow.
3. Record settings and mark balancing devices.

H. Measure pump flow rate and make final measurements of pump amperage, voltage, rpm, pump heads, and systems' pressures and temperatures including outdoor-air temperature.

I. Measure the differential-pressure-control-valve settings existing at the conclusion of balancing.

J. Check settings and operation of each safety valve. Record settings.

3.9 PROCEDURES FOR VARIABLE-FLOW HYDRONIC SYSTEMS

A. Balance systems with automatic two- and three-way control valves by setting systems at maximum flow through heat-exchange terminals and proceed as specified above for hydronic systems.

3.10 PROCEDURES FOR MOTORS

A. Motors, 1/2 HP and Larger: Test at final balanced conditions and record the following data:

1. Manufacturer's name, model number, and serial number.
2. Motor horsepower rating.
3. Motor rpm.
4. Efficiency rating.
5. Nameplate and measured voltage, each phase.
6. Nameplate and measured amperage, each phase.
7. Starter thermal-protection-element rating.

B. Motors Driven by Variable-Frequency Controllers: Test for proper operation at speeds varying from minimum to maximum. Test the manual bypass of the controller to prove proper operation. Record observations including name of controller manufacturer, model number, serial number, and nameplate data.

3.11 PROCEDURES FOR CONDENSING UNITS

A. Verify proper rotation of fans.

B. Measure entering- and leaving-air temperatures.

C. Record compressor data.

3.12 PROCEDURES FOR CHILLERS AND BOILERS

A. Measure and record entering- and leaving-water temperatures and water flow.

3.13 PROCEDURES FOR HEAT-TRANSFER COILS

A. Measure, adjust, and record the following data for each water coil:

1. Entering- and leaving-water temperature.
2. Water flow rate.
3. Water pressure drop.
4. Dry-bulb temperature of entering and leaving air.
5. Wet-bulb temperature of entering and leaving air for cooling coils.
6. Airflow.
7. Air pressure drop.

B. Measure, adjust, and record the following data for each electric heating coil:

1. Nameplate data.
2. Airflow.
3. Entering- and leaving-air temperature at full load.
4. Voltage and amperage input of each phase at full load and at each incremental stage.
5. Calculated kilowatt at full load.
6. Fuse or circuit-breaker rating for overload protection.

C. Measure, adjust, and record the following data for each steam coil:

1. Dry-bulb temperature of entering and leaving air.
2. Airflow.
3. Air pressure drop.

4. Inlet steam pressure.

D. Measure, adjust, and record the following data for each refrigerant coil:

1. Dry-bulb temperature of entering and leaving air.
2. Wet-bulb temperature of entering and leaving air.
3. Airflow.
4. Air pressure drop.
5. Refrigerant suction pressure and temperature.

3.14 TOLERANCES

A. Set HVAC system's air flow rates and water flow rates within the following tolerances:

1. Supply, Return, and Exhaust Fans and Equipment with Fans: Plus or minus 10 percent.
2. Air Outlets and Inlets:
   a. General Rooms: Plus or minus 10 percent.
   b. Negative Rooms: Laboratories, Chemical Storage, Bio Hazard, Soiled Rooms, Isolation Rooms, Decontamination, Anesthesia Workroom, Medical and Dental Gas Storage:
      1) Outlets: Plus 0 percent, minus 10 percent.
      2) Inlets: Plus 10 percent, minus 0 percent.
   c. Positive Rooms: Clean Workrooms, Clean Utility, Dispensing Workroom, IV Workroom, Sterile Supply and Storage, Procedure Rooms, Dental Workroom Sterile:
      1) Outlets: Plus 10 percent, minus 0 percent.
      2) Inlets: Plus 0 percent, minus 10 percent.
3. Heating-Water Flow Rate: Plus or minus 10 percent.
4. Cooling-Water Flow Rate: Plus or minus 10 percent.

3.15 REPORTING

A. Initial Construction-Phase Report: Based on examination of the Contract Documents as specified in "Examination" Article, prepare a report on the adequacy of design for systems' balancing devices. Recommend changes and additions to systems' balancing devices to facilitate proper performance measuring and balancing. Recommend changes and additions to HVAC systems and general construction to allow access for performance measuring and balancing devices.

B. Status Reports: Prepare monthly progress reports to describe completed procedures, procedures in progress, and scheduled procedures. Include a list of deficiencies and problems found in systems being tested and balanced. Prepare a separate report for each system and each building floor for systems serving multiple floors.

3.16 FINAL REPORT

A. General: Prepare a certified written report; tabulate and divide the report into separate sections for tested systems and balanced systems.

1. Include a certification sheet at the front of the report's binder, signed and sealed by the certified testing and balancing engineer.
2. Include a list of instruments used for procedures, along with proof of calibration.

B. Final Report Contents: In addition to certified field-report data, include the following:

1. Pump curves.
2. Fan curves.
3. Manufacturers' test data.
4. Field test reports prepared by system and equipment installers.
5. Other information relative to equipment performance; do not include Shop Drawings and product data.

C. General Report Data: In addition to form titles and entries, include the following data:

1. Title page.
2. Name and address of the TAB contractor.
3. Project name.
4. Project location.
5. Architect's name and address.
6. Engineer's name and address.
7. Contractor's name and address.
8. Report date.
9. Signature of TAB supervisor who certifies the report.
10. Table of Contents with the total number of pages defined for each section of the report. Number each page in the report.
11. Summary of contents including the following:

    a. Indicated versus final performance.
    b. Notable characteristics of systems.
    c. Description of system operation sequence if it varies from the Contract Documents.

12. Nomenclature sheets for each item of equipment.
13. Data for terminal units, including manufacturer's name, type, size, and fittings.
14. Notes to explain why certain final data in the body of reports vary from indicated values.
15. Test conditions for fans and pump performance forms including the following:

    a. Settings for outdoor-, return-, and exhaust-air dampers.
    b. Conditions of filters.
    c. Cooling coil, wet- and dry-bulb conditions.
    d. Face and bypass damper settings at coils.
    e. Fan drive settings including settings and percentage of maximum pitch diameter.
    f. Inlet vane settings for variable-air-volume systems.
    g. Settings for supply-air, static-pressure controller.
    h. Other system operating conditions that affect performance.

D. System Diagrams: Include schematic layouts of air and hydronic distribution systems. Present each system with single-line diagram and include the following:

1. Quantities of outdoor, supply, return, and exhaust airflows.
2. Water and steam flow rates.
3. Duct, outlet, and inlet sizes.
4. Pipe and valve sizes and locations.
5. Terminal units.
6. Balancing stations.
7. Position of balancing devices.

3.17 ADDITIONAL TESTS

A. Within 90 days of completing TAB, perform additional TAB to verify that balanced conditions are

being maintained throughout and to correct unusual conditions.

B. Seasonal Periods: If initial TAB procedures were not performed during near-peak summer and winter conditions, perform additional TAB during near-peak summer and winter conditions.

END OF SECTION

SECTION 23 0713

DUCT INSULATION

PART 1 - GENERAL

1.1 SUMMARY

A. Section includes insulating the following duct services:

1. Indoor, concealed supply and outdoor air.
2. Indoor, exposed supply and outdoor air.
3. Indoor, concealed return located in unconditioned space.
4. Indoor, exposed return located in unconditioned space.
5. Indoor, concealed exhaust between isolation damper and penetration of building exterior.
6. Indoor, exposed exhaust between isolation damper and penetration of building exterior.
7. Outdoor, concealed supply and return.
8. Outdoor, exposed supply and return.

B. Related Sections:

1. Section 23 0719 "HVAC Piping Insulation."
2. Section 23 3113 "Metal Ducts" for duct liners.

1.2 ACTION SUBMITTALS

A. Product Data: For each type of product indicated.

B. Shop Drawings: Include plans, elevations, sections, details, and attachments to other work.

1. Detail application of protective shields, saddles, and inserts at hangers for each type of insulation and hanger.
2. Detail insulation application at elbows, fittings, dampers, specialties and flanges for each type of insulation.
3. Detail application of field-applied jackets.
4. Detail application at linkages of control devices.

1.3 INFORMATIONAL SUBMITTALS

A. Field quality-control reports.

1.4 QUALITY ASSURANCE

A. Surface-Burning Characteristics: For insulation and related materials, as determined by testing identical products according to ASTM E 84, by a testing agency acceptable to authorities having jurisdiction. Factory label insulation and jacket materials and adhesive, mastic, tapes, and cement material containers, with appropriate markings of applicable testing agency.

1. Insulation Installed Indoors: Flame-spread index of 25 or less, and smoke-developed index of 50 or less.
2. Insulation Installed Outdoors: Flame-spread index of 75 or less, and smoke-developed index of 150 or less.

PART 2 - PRODUCTS

2.1 INSULATION MATERIALS

A. Comply with requirements in "Duct Insulation Schedule, General," "Indoor Duct and Plenum Insulation Schedule," and "Aboveground, Outdoor Duct and Plenum Insulation Schedule" articles for where insulating materials shall be applied.

B. Products shall not contain asbestos, lead, mercury, or mercury compounds.

C. Products that come in contact with stainless steel shall have a leachable chloride content of less than 50 ppm when tested according to ASTM C 871.

D. Insulation materials for use on austenitic stainless steel shall be qualified as acceptable according to ASTM C 795.

E. Foam insulation materials shall not use CFC or HCFC blowing agents in the manufacturing process.

F. Mineral-Fiber Blanket Insulation: Mineral or glass fibers bonded with a thermosetting resin. Comply with ASTM C 553, Type II and ASTM C 1290, Type II with factory-applied vinyl jacket. Factory-applied jacket requirements are specified in "Factory-Applied Jackets" Article.

1. Products: Subject to compliance with requirements, provide one of the following:

    a. CertainTeed Corp.; SoftTouch Duct Wrap.

    b. Johns Manville; Microlite.

    c. Knauf Insulation; Friendly Feel Duct Wrap.

    d. Owens Corning; SOFTR All-Service Duct Wrap.

G. Mineral-Fiber Board Insulation: Mineral or glass fibers bonded with a thermosetting resin. Comply with ASTM C 612, Type IA or Type IB. For duct and plenum applications, provide insulation without factory-applied jacket. Factory-applied jacket requirements are specified in "Factory-Applied Jackets" Article.

1. Products: Subject to compliance with requirements, provide one of the following:

    a. CertainTeed Corp.; Commercial Board.

    b. Johns Manville; 800 Series Spin-Glas.

    c. Knauf Insulation; Insulation Board.

    d. Owens Corning; Fiberglas 700 Series.

2.2 ADHESIVES

A. Materials shall be compatible with insulation materials, jackets, and substrates and for bonding insulation to itself and to surfaces to be insulated unless otherwise indicated.

B. Mineral-Fiber Adhesive: Comply with MIL-A-3316C, Class 2, Grade A.

1. Products: Subject to compliance with requirements, provide one of the following:

a. Childers Brand, Specialty Construction Brands, Inc., a business of H. B. Fuller Company; CP-127.

b. Eagle Bridges - Marathon Industries; 225.

c. Foster Brand, Specialty Construction Brands, Inc., a business of H. B. Fuller Company; 85-60/85-70.

d. Mon-Eco Industries, Inc.; 22-25.

C. ASJ Adhesive, and FSK Jacket Adhesive: Comply with MIL-A-3316C, Class 2, Grade A for bonding insulation jacket lap seams and joints.

1. Products: Subject to compliance with requirements, provide one of the following:

a. Childers Brand, Specialty Construction Brands, Inc., a business of H. B. Fuller Company; CP-82.

b. Eagle Bridges - Marathon Industries; 225.

c. Foster Brand, Specialty Construction Brands, Inc., a business of H. B. Fuller Company; 85-50.

d. Mon-Eco Industries, Inc.; 22-25.

D. PVC Jacket Adhesive: Compatible with PVC jacket.

1. Products: Subject to compliance with requirements, provide one of the following:

a. Dow Corning Corporation; 739, Dow Silicone.

b. Johns Manville; Zeston Perma-Weld, CEEL-TITE Solvent Welding Adhesive.

c. P.I.C. Plastics, Inc.; Welding Adhesive.

d. Speedline Corporation; Polyco VP Adhesive.

2.3 MASTICS

A. Materials shall be compatible with insulation materials, jackets, and substrates; comply with MIL-PRF-19565C, Type II.

1. For indoor applications, use mastics that have a VOC content of 50 g/L or less when calculated according to 40 CFR 59, Subpart D (EPA Method 24).

B. Vapor-Barrier Mastic: Water based; suitable for indoor use on below ambient services.

1. Products: Subject to compliance with requirements, provide one of the following:

a. Foster Brand, Specialty Construction Brands, Inc., a business of H. B. Fuller Company; 30-80/30-90.

b. Vimasco Corporation; 749.

2. Water-Vapor Permeance: ASTM E 96/E 96M, Procedure B, 0.013 perm at 43-mil dry film thickness.
3. Service Temperature Range: Minus 20 to plus 180 deg F.
4. Solids Content: ASTM D 1644, 58 percent by volume and 70 percent by weight.
5. Color: White.

C. Breather Mastic: Water based; suitable for indoor and outdoor use on above ambient services.

1. Products: Subject to compliance with requirements, provide one of the following:

a. Childers Brand, Specialty Construction Brands, Inc., a business of H. B. Fuller Company; CP-10.

b. Eagle Bridges - Marathon Industries; 550.

c. Foster Brand, Specialty Construction Brands, Inc., a business of H. B. Fuller Company; 46-50.

d. Mon-Eco Industries, Inc.; 55-50.

e. Vimasco Corporation; WC-1/WC-5.

2. Water-Vapor Permeance: ASTM F 1249, 1.8 perms at 0.0625-inch dry film thickness.
3. Service Temperature Range: Minus 20 to plus 180 deg F.
4. Solids Content: 60 percent by volume and 66 percent by weight.
5. Color: White.

2.4 SEALANTS

A. FSK and Metal Jacket Flashing Sealants:

1. Products: Subject to compliance with requirements, provide one of the following:

a. Childers Brand, Specialty Construction Brands, Inc., a business of H. B. Fuller Company; CP-76.

b. Eagle Bridges - Marathon Industries; 405.

c. Foster Brand, Specialty Construction Brands, Inc., a business of H. B. Fuller Company; 95-44.

d. Mon-Eco Industries, Inc.; 44-05.

2. Materials shall be compatible with insulation materials, jackets, and substrates.
3. Fire- and water-resistant, flexible, elastomeric sealant.

4. Service Temperature Range: Minus 40 to plus 250 deg F.
5. Color: Aluminum.

B. ASJ Flashing Sealants, and Vinyl and PVC Jacket Flashing Sealants:

1. Products: Subject to compliance with requirements, available products that may be incorporated into the Work include, but are not limited to, the following:

a. Childers Brand, Specialty Construction Brands, Inc., a business of H. B. Fuller Company; CP-76.

2. Materials shall be compatible with insulation materials, jackets, and substrates.
3. Fire- and water-resistant, flexible, elastomeric sealant.
4. Service Temperature Range: Minus 40 to plus 250 deg F.
5. Color: White.

2.5 FACTORY-APPLIED JACKETS

A. Insulation system schedules indicate factory-applied jackets on various applications. When factory-applied jackets are indicated, comply with the following:

1. ASJ: White, kraft-paper, fiberglass-reinforced scrim with aluminum-foil backing; complying with ASTM C 1136, Type I.
2. ASJ-SSL: ASJ with self-sealing, pressure-sensitive, acrylic-based adhesive covered by a removable protective strip; complying with ASTM C 1136, Type I.
3. FSK Jacket: Aluminum-foil, fiberglass-reinforced scrim with kraft-paper backing; complying with ASTM C 1136, Type II.
4. FSP Jacket: Aluminum-foil, fiberglass-reinforced scrim with polyethylene backing; complying with ASTM C 1136, Type II.
5. Vinyl Jacket: White vinyl with a permeance of 1.3 perms when tested according to ASTM E 96/E 96M, Procedure A, and complying with NFPA 90A and NFPA 90B.

2.6 FIELD-APPLIED JACKETS

A. Field-applied jackets shall comply with ASTM C 921, Type I, unless otherwise indicated.

B. FSK Jacket: Aluminum-foil-face, fiberglass-reinforced scrim with kraft-paper backing.

C. PVC Jacket: High-impact-resistant, UV-resistant PVC complying with ASTM D 1784, Class 16354-C; thickness as scheduled; roll stock ready for shop or field cutting and forming. Thickness is indicated in field-applied jacket schedules.

1. Products: Subject to compliance with requirements, provide one of the following:

a. Johns Manville; Zeston.

b. P.I.C. Plastics, Inc.; FG Series.

c. Proto Corporation; LoSmoke.

d. Speedline Corporation; SmokeSafe.

2. Adhesive: As recommended by jacket material manufacturer.

3. Color: Color-code jackets based on system. Color as selected by Architect].

D. Aluminum Jacket: Comply with ASTM B 209, Alloy 3003, 3005, 3105, or 5005, Temper H-14.

1. Products: Subject to compliance with requirements, provide one of the following:

a. Childers Brand, Specialty Construction Brands, Inc., a business of H. B. Fuller Company; Metal Jacketing Systems.

b. ITW Insulation Systems; Aluminum and Stainless Steel Jacketing.

c. RPR Products, Inc.; Insul-Mate.

2. Sheet and roll stock ready for shop or field sizing.
3. Finish and thickness are indicated in field-applied jacket schedules.
4. Moisture Barrier for Indoor Applications: 1-mil-thick, heat-bonded polyethylene and kraft paper.
5. Moisture Barrier for Outdoor Applications: 3-mil-thick, heat-bonded polyethylene and kraft paper.

2.7 TAPES

A. ASJ Tape: White vapor-retarder tape matching factory-applied jacket with acrylic adhesive, complying with ASTM C 1136.

1. Products: Subject to compliance with requirements, provide one of the following:

a. ABI, Ideal Tape Division; 428 AWF ASJ.

b. Avery Dennison Corporation, Specialty Tapes Division; Fasson 0836.

c. Compac Corporation; 104 and 105.

d. Venture Tape; 1540 CW Plus, 1542 CW Plus, and 1542 CW Plus/SQ.

2. Width: 3 inches.
3. Thickness: 11.5 mils.
4. Adhesion: 90 ounces force/inch in width.
5. Elongation: 2 percent.
6. Tensile Strength: 40 lbf/inch in width.
7. ASJ Tape Disks and Squares: Precut disks or squares of ASJ tape.

B. Aluminum-Foil Tape: Vapor-retarder tape with acrylic adhesive.

1. Products: Subject to compliance with requirements, provide one of the following:

a. ABI, Ideal Tape Division; 488 AWF.

b. Avery Dennison Corporation, Specialty Tapes Division; Fasson 0800.

c. Compac Corporation; 120.

d. Venture Tape; 3520 CW.

2. Width: 2 inches.
3. Thickness: 3.7 mils.
4. Adhesion: 100 ounces force/inch in width.
5. Elongation: 5 percent.
6. Tensile Strength: 34 lbf/inch in width.

PART 3 - EXECUTION

3.1 PREPARATION

A. Surface Preparation: Clean and dry surfaces to receive insulation. Remove materials that will adversely affect insulation application.

3.2 GENERAL INSTALLATION REQUIREMENTS

A. Install insulation materials, accessories, and finishes with smooth, straight, and even surfaces; free of voids throughout the length of ducts and fittings.

B. Install insulation materials, vapor barriers or retarders, jackets, and thicknesses required for each item of duct system as specified in insulation system schedules.

C. Install accessories compatible with insulation materials and suitable for the service. Install accessories that do not corrode, soften, or otherwise attack insulation or jacket in either wet or dry state.

D. Install insulation with longitudinal seams at top and bottom of horizontal runs.

E. Install multiple layers of insulation with longitudinal and end seams staggered.

F. Keep insulation materials dry during application and finishing.

G. Install insulation with tight longitudinal seams and end joints. Bond seams and joints with adhesive recommended by insulation material manufacturer.

H. Install insulation with least number of joints practical.

I. Where vapor barrier is indicated, seal joints, seams, and penetrations in insulation at hangers, supports, anchors, and other projections with vapor-barrier mastic.

1. Install insulation continuously through hangers and around anchor attachments.
2. For insulation application where vapor barriers are indicated, extend insulation on anchor legs from point of attachment to supported item to point of attachment to structure. Taper and seal ends at attachment to structure with vapor-barrier mastic.
3. Install insert materials and install insulation to tightly join the insert. Seal insulation to insulation inserts with adhesive or sealing compound recommended by insulation material manufacturer.

J. Apply adhesives, mastics, and sealants at manufacturer's recommended coverage rate and wet and dry film thicknesses.

K. Install insulation with factory-applied jackets as follows:

1. Draw jacket tight and smooth.
2. Cover circumferential joints with 3-inch-wide strips, of same material as insulation jacket. Secure strips with adhesive and outward clinching staples along both edges of strip, spaced 4 inches o.c.
3. Overlap jacket longitudinal seams at least 1-1/2 inches. Clean and dry surface to receive self-sealing lap. Staple laps with outward clinching staples along edge at 4 inches o.c.

    a. For below ambient services, apply vapor-barrier mastic over staples.

4. Cover joints and seams with tape, according to insulation material manufacturer's written instructions, to maintain vapor seal.
5. Where vapor barriers are indicated, apply vapor-barrier mastic on seams and joints and at ends adjacent to duct flanges and fittings.

L. Cut insulation in a manner to avoid compressing insulation more than 75 percent of its nominal thickness.

M. Finish installation with systems at operating conditions. Repair joint separations and cracking due to thermal movement.

N. Repair damaged insulation facings by applying same facing material over damaged areas. Extend patches at least 4 inches beyond damaged areas. Adhere, staple, and seal patches similar to butt joints.

3.3 PENETRATIONS

A. Insulation Installation at Roof Penetrations: Install insulation continuously through roof penetrations.

1. Seal penetrations with flashing sealant.
2. For applications requiring only indoor insulation, terminate insulation above roof surface and seal with joint sealant. For applications requiring indoor and outdoor insulation, install insulation for outdoor applications tightly joined to indoor insulation ends. Seal joint with joint sealant.
3. Extend jacket of outdoor insulation outside roof flashing at least 2 inches below top of roof flashing.
4. Seal jacket to roof flashing with flashing sealant.

B. Insulation Installation at Aboveground Exterior Wall Penetrations: Install insulation continuously through wall penetrations.

1. Seal penetrations with flashing sealant.
2. For applications requiring only indoor insulation, terminate insulation inside wall surface and seal with joint sealant. For applications requiring indoor and outdoor insulation, install insulation for outdoor applications tightly joined to indoor insulation ends. Seal joint with joint sealant.
3. Extend jacket of outdoor insulation outside wall flashing and overlap wall flashing at least 2 inches.
4. Seal jacket to wall flashing with flashing sealant.

C. Insulation Installation at Interior Wall and Partition Penetrations (That Are Not Fire Rated): Install insulation continuously through walls and partitions.

D. Insulation Installation at Fire-Rated Wall and Partition Penetrations: Terminate insulation at fire damper sleeves for fire-rated wall and partition penetrations. Externally insulate damper sleeves to match adjacent insulation and overlap duct insulation at least 2 inches.

1. Comply with requirements in Section 07 8413 "Penetration Firestopping" for firestopping and fire-resistive joint sealers.

E. Insulation Installation at Floor Penetrations:

1. Duct: For penetrations through fire-rated assemblies, terminate insulation at fire damper sleeves and externally insulate damper sleeve beyond floor to match adjacent duct insulation. Overlap damper sleeve and duct insulation at least 2 inches.
2. Seal penetrations through fire-rated assemblies. Comply with requirements in Section 07 8413 "Penetration Firestopping."

3.4 INSTALLATION OF MINERAL-FIBER INSULATION

A. Blanket Insulation Installation on Ducts and Plenums: Secure with adhesive and insulation pins.

1. Apply adhesives according to manufacturer's recommended coverage rates per unit area, for 50 percent coverage of duct and plenum surfaces.
2. Apply adhesive to entire circumference of ducts and to all surfaces of fittings and transitions.
3. Install either capacitor-discharge-weld pins and speed washers or cupped-head, capacitor-discharge-weld pins on sides and bottom of horizontal ducts and sides of vertical ducts as follows:

    a. On duct sides with dimensions 18 inches and smaller, place pins along longitudinal centerline of duct. Space 3 inches maximum from insulation end joints, and 16 inches o.c.
    b. On duct sides with dimensions larger than 18 inches, place pins 16 inches o.c. each way, and 3 inches maximum from insulation joints. Install additional pins to hold insulation tightly against surface at cross bracing.
    c. Pins may be omitted from top surface of horizontal, rectangular ducts and plenums.
    d. Do not overcompress insulation during installation.
    e. Impale insulation over pins and attach speed washers.
    f. Cut excess portion of pins extending beyond speed washers or bend parallel with insulation surface. Cover exposed pins and washers with tape matching insulation facing.

4. For ducts and plenums with surface temperatures below ambient, install a continuous unbroken vapor barrier. Create a facing lap for longitudinal seams and end joints with insulation by removing 2 inches from one edge and one end of insulation segment. Secure laps to adjacent insulation section with 1/2-inch outward-clinching staples, 1 inch o.c. Install vapor barrier consisting of factory- or field-applied jacket, adhesive, vapor-barrier mastic, and sealant at joints, seams, and protrusions.

    a. Repair punctures, tears, and penetrations with tape or mastic to maintain vapor-barrier seal.
    b. Install vapor stops for ductwork and plenums operating below 50 deg F at 18-foot intervals. Vapor stops shall consist of vapor-barrier mastic applied in a Z-shaped pattern over insulation face, along butt end of insulation, and over the surface.

Cover insulation face and surface to be insulated a width equal to two times the insulation thickness, but not less than 3 inches.

5. Overlap unfaced blankets a minimum of 2 inches on longitudinal seams and end joints. At end joints, secure with steel bands spaced a maximum of 18 inches o.c.
6. Install insulation on rectangular duct elbows and transitions with a full insulation section for each surface. Install insulation on round and flat-oval duct elbows with individually mitered gores cut to fit the elbow.
7. Insulate duct stiffeners, hangers, and flanges that protrude beyond insulation surface with 6-inch-wide strips of same material used to insulate duct. Secure on alternating sides of stiffener, hanger, and flange with pins spaced 6 inches o.c.

B. Board Insulation Installation on Ducts and Plenums: Secure with adhesive and insulation pins.

1. Apply adhesives according to manufacturer's recommended coverage rates per unit area, for 100 percent coverage of duct and plenum surfaces.
2. Apply adhesive to entire circumference of ducts and to all surfaces of fittings and transitions.
3. Install either capacitor-discharge-weld pins and speed washers or cupped-head, capacitor-discharge-weld pins on sides and bottom of horizontal ducts and sides of vertical ducts as follows:

    a. On duct sides with dimensions 18 inches and smaller, place pins along longitudinal centerline of duct. Space 3 inches maximum from insulation end joints, and 16 inches o.c.
    b. On duct sides with dimensions larger than 18 inches, space pins 16 inches o.c. each way, and 3 inches maximum from insulation joints. Install additional pins to hold insulation tightly against surface at cross bracing.
    c. Pins may be omitted from top surface of horizontal, rectangular ducts and plenums.
    d. Do not overcompress insulation during installation.
    e. Cut excess portion of pins extending beyond speed washers or bend parallel with insulation surface. Cover exposed pins and washers with tape matching insulation facing.

4. For ducts and plenums with surface temperatures below ambient, install a continuous unbroken vapor barrier. Create a facing lap for longitudinal seams and end joints with insulation by removing 2 inches from one edge and one end of insulation segment. Secure laps to adjacent insulation section with 1/2-inch outward-clinching staples, 1 inch o.c. Install vapor barrier consisting of factory- or field-applied jacket, adhesive, vapor-barrier mastic, and sealant at joints, seams, and protrusions.

    a. Repair punctures, tears, and penetrations with tape or mastic to maintain vapor-barrier seal.
    b. Install vapor stops for ductwork and plenums operating below 50 deg F at 18-foot intervals. Vapor stops shall consist of vapor-barrier mastic applied in a Z-shaped pattern over insulation face, along butt end of insulation, and over the surface. Cover insulation face and surface to be insulated a width equal to two times the insulation thickness, but not less than 3 inches.

5. Install insulation on rectangular duct elbows and transitions with a full insulation section for each surface. Groove and score insulation to fit as closely as possible to outside and inside radius of elbows. Install insulation on round and flat-oval duct elbows with individually mitered gores cut to fit the elbow.

6. Insulate duct stiffeners, hangers, and flanges that protrude beyond insulation surface with 6-inch-wide strips of same material used to insulate duct. Secure on alternating sides of stiffener, hanger, and flange with pins spaced 6 inches o.c.

3.5 FIELD-APPLIED JACKET INSTALLATION

A. Where FSK jackets are indicated, install as follows:

1. Draw jacket material smooth and tight.
2. Install lap or joint strips with same material as jacket.
3. Secure jacket to insulation with manufacturer's recommended adhesive.
4. Install jacket with 1-1/2-inch laps at longitudinal seams and 3-inch-wide joint strips at end joints.
5. Seal openings, punctures, and breaks in vapor-retarder jackets and exposed insulation with vapor-barrier mastic.

B. Where PVC jackets are indicated, install with 1-inch overlap at longitudinal seams and end joints; for horizontal applications, install with longitudinal seams along top and bottom of tanks and vessels. Seal with manufacturer's recommended adhesive.

1. Apply two continuous beads of adhesive to seams and joints, one bead under lap and the finish bead along seam and joint edge.

C. Where metal jackets are indicated, install with 2-inch overlap at longitudinal seams and end joints. Overlap longitudinal seams arranged to shed water. Seal end joints with weatherproof sealant recommended by insulation manufacturer. Secure jacket with stainless-steel bands 12 inches o.c. and at end joints.

3.6 FINISHES

A. Insulation with ASJ or Other Paintable Jacket Material: Paint jacket with paint system identified below and as specified in Section 09 9113 "Exterior Painting" and Section 09 9123 "Interior Painting."

1. Flat Acrylic Finish: Two finish coats over a primer that is compatible with jacket material and finish coat paint. Add fungicidal agent to render fabric mildew proof.

a. Finish Coat Material: Interior, flat, latex-emulsion size.

B. Color: Final color as selected by Architect. Vary first and second coats to allow visual inspection of the completed Work.

C. Do not field paint aluminum or stainless-steel jackets.

3.7 FIELD QUALITY CONTROL

A. Perform tests and inspections.

B. All insulation applications will be considered defective Work if sample inspection reveals noncompliance with requirements.

3.8 DUCT INSULATION SCHEDULE, GENERAL

A. Refer to schedules on drawings for material and thickness application to duct systems.

B. Plenums and Ducts Requiring Insulation:

1. Indoor, concealed supply and outdoor air.
2. Indoor, exposed supply and outdoor air.
3. Indoor, concealed return located in unconditioned space.
4. Indoor, exposed return located in unconditioned space.
5. Indoor, concealed exhaust between isolation damper and penetration of building exterior.
6. Indoor, exposed exhaust between isolation damper and penetration of building exterior.
7. Outdoor, concealed supply and return.
8. Outdoor, exposed supply and return.

C. Items Not Insulated:

1. Fibrous-glass ducts.
2. Metal ducts with duct liner of sufficient thickness to comply with energy code and ASHRAE/IESNA 90.1-2007.
3. Factory-insulated flexible ducts.
4. Factory-insulated plenums and casings.
5. Flexible connectors.
6. Vibration-control devices.
7. Factory-insulated access panels and doors.

END OF SECTION

SECTION 23 0716

HVAC EQUIPMENT INSULATION

PART 1 - GENERAL

1.1 SUMMARY

A. Section includes insulating the following HVAC equipment that is not factory insulated:
   1. Chilled-water pumps.
   2. Heating, hot-water pumps.
   3. Expansion/compression tanks.
   4. Air separators.

B. Related Sections:

   1. Section 23 0713 "Duct Insulation."
   2. Section 23 0719 "HVAC Piping Insulation."

1.2 ACTION SUBMITTALS

A. Product Data: For each type of product indicated.

B. Shop Drawings: Include plans, elevations, sections, details, and attachments to other work.

   1. Detail application of protective shields, saddles, and inserts at hangers for each type of insulation and hanger.
   2. Detail attachment and covering of heat tracing inside insulation.
   3. Detail removable insulation at equipment connections.
   4. Detail application of field-applied jackets.
   5. Detail application at linkages of control devices.
   6. Detail field application for each equipment type.

1.3 INFORMATIONAL SUBMITTALS

A. Field quality-control reports.

1.4 QUALITY ASSURANCE

A. Surface-Burning Characteristics: For insulation and related materials, as determined by testing identical products according to ASTM E 84, by a testing agency acceptable to authorities having jurisdiction. Factory label insulation and jacket materials and adhesive, mastic, tapes, and cement material containers, with appropriate markings of applicable testing agency.

   1. Insulation Installed Indoors: Flame-spread index of 25 or less, and smoke-developed index of 50 or less.
   2. Insulation Installed Outdoors: Flame-spread index of 75 or less, and smoke-developed index of 150 or less.

PART 2 - PRODUCTS

2.1 INSULATION MATERIALS

A. Products shall not contain asbestos, lead, mercury, or mercury compounds.

B. Products that come in contact with stainless steel shall have a leachable chloride content of less than 50 ppm when tested according to ASTM C 871.

C. Insulation materials for use on austenitic stainless steel shall be qualified as acceptable according to ASTM C 795.

D. Foam insulation materials shall not use CFC or HCFC blowing agents in the manufacturing process.

E. Cellular Glass: Inorganic, incombustible, foamed or cellulated glass with annealed, rigid, hermetically sealed cells. Factory-applied jacket requirements are specified in "Factory-Applied Jackets" Article.

1. Products: Subject to compliance with requirements, available products that may be incorporated into the Work include, but are not limited to, the following:

a. Pittsburgh Corning Corporation; Foamglas.

2. Block Insulation: ASTM C 552, Type I.
3. Special-Shaped Insulation: ASTM C 552, Type III.
4. Board Insulation: ASTM C 552, Type IV.
5. Factory fabricate shapes according to ASTM C 450 and ASTM C 585.

F. Flexible Elastomeric Insulation: Closed-cell, sponge- or expanded-rubber materials. Comply with ASTM C 534, Type I for tubular materials and Type II for sheet materials.

1. Products: Subject to compliance with requirements, provide one of the following:

a. Aeroflex USA, Inc.; Aerocel.

b. Armacell LLC; AP Armaflex.

c. K-Flex USA; Insul-Sheet and K-FLEX LS.

G. Mineral-Fiber Blanket Insulation: Mineral or glass fibers bonded with a thermosetting resin. Comply with ASTM C 553, Type II and ASTM C 1290, Type I. Factory-applied jacket requirements are specified in "Factory-Applied Jackets" Article.

1. Products: Subject to compliance with requirements, provide one of the following:

a. CertainTeed Corp.; SoftTouch Duct Wrap.

b. Johns Manville; Microlite.

c. Knauf Insulation; Friendly Feel Duct Wrap.

d. Manson Insulation Inc.; Alley Wrap.

e. Owens Corning; SOFTR All-Service Duct Wrap.

H. Mineral-Fiber, Pipe and Tank Insulation: Mineral or glass fibers bonded with a thermosetting resin. Semirigid board material with factory-applied ASJ complying with ASTM C 1393, Type II or Type IIIA Category 2, or with properties similar to ASTM C 612, Type IB. Nominal density is 2.5 lb/cu. ft. or more. Thermal conductivity (k-value) at 100 deg F is 0.29 Btu x in./h x sq. ft. x deg F or less. Factory-applied jacket requirements are specified in "Factory-Applied Jackets" Article.

1. Products: Subject to compliance with requirements, provide one of the following:

a. CertainTeed Corp.; CrimpWrap.

b. Johns Manville; MicroFlex.

c. Knauf Insulation; Pipe and Tank Insulation.

d. Manson Insulation Inc.; AK Flex.

e. Owens Corning; Fiberglas Pipe and Tank Insulation.

2.2 ADHESIVES

A. Materials shall be compatible with insulation materials, jackets, and substrates and for bonding insulation to itself and to surfaces to be insulated unless otherwise indicated.

B. Cellular-Glass Adhesive: Two-component, thermosetting urethane adhesive containing no flammable solvents, with a service temperature range of minus 100 to plus 200 deg F.

1. Products: Subject to compliance with requirements, available products that may be incorporated into the Work include, but are not limited to, the following:

a. Foster Brand, Specialty Construction Brands, Inc., a business of H. B. Fuller Company; 81-84.

C. Flexible Elastomeric and Polyolefin Adhesive: Comply with MIL-A-24179A, Type II, Class I.

1. Products: Subject to compliance with requirements, provide one of the following:

a. Aeroflex USA, Inc.; Aeroseal.

b. Armacell LLC; Armaflex 520 Adhesive.

c. Foster Brand, Specialty Construction Brands, Inc., a business of H. B. Fuller Company; 85-75.

d. K-Flex USA; R-373 Contact Adhesive.

D. Mineral-Fiber Adhesive: Comply with MIL-A-3316C, Class 2, Grade A.

1. Products: Subject to compliance with requirements, provide one of the following:

a. Childers Brand, Specialty Construction Brands, Inc., a business of H. B. Fuller Company; CP-127.

b. Eagle Bridges - Marathon Industries; 225.

c. Foster Brand, Specialty Construction Brands, Inc., a business of H. B. Fuller Company; 85-60/85-70.

d. Mon-Eco Industries, Inc.; 22-25.

E. ASJ Adhesive, and FSK and PVDC Jacket Adhesive: Comply with MIL-A-3316C, Class 2, Grade A for bonding insulation jacket lap seams and joints.

1. Products: Subject to compliance with requirements, provide one of the following:

a. Childers Brand, Specialty Construction Brands, Inc., a business of H. B. Fuller Company; CP-82.

b. Eagle Bridges - Marathon Industries; 225.

c. Foster Brand, Specialty Construction Brands, Inc., a business of H. B. Fuller Company; 85-50.

d. Mon-Eco Industries, Inc.; 22-25.

F. PVC Jacket Adhesive: Compatible with PVC jacket.

1. Products: Subject to compliance with requirements, provide one of the following:

a. Dow Corning Corporation; 739, Dow Silicone.

b. Johns Manville; Zeston Perma-Weld, CEEL-TITE Solvent Welding Adhesive.

c. P.I.C. Plastics, Inc.; Welding Adhesive.

d. Speedline Corporation; Polyco VP Adhesive.

2.3 MASTICS

A. Materials shall be compatible with insulation materials, jackets, and substrates; comply with MIL-PRF-19565C, Type II.

B. Vapor-Barrier Mastic: Water based; suitable for indoor and outdoor use on below ambient services.

1. Products: Subject to compliance with requirements, available products that may be incorporated into the Work include, but are not limited to, the following:

a. Foster Brand, Specialty Construction Brands, Inc., a business of H .B. Fuller Company; 30-80/30-90.

b. Vimasco Corporation; 749.

2. Water-Vapor Permeance: ASTM E 96/E 96M, Procedure B, 0.013 perm at 43-mil dry film thickness.
3. Service Temperature Range: Minus 20 to plus 180 deg F.
4. Solids Content: ASTM D 1644, 58 percent by volume and 70 percent by weight.

5. Color: White.

C. Breather Mastic: Water based; suitable for indoor and outdoor use on above ambient services.

1. Products: Subject to compliance with requirements, provide one of the following:

a. Childers Brand, Specialty Construction Brands, Inc., a business of H. B. Fuller Company; CP-10.

b. Eagle Bridges - Marathon Industries; 550.

c. Foster Brand, Specialty Construction Brands, Inc., a business of H. B. Fuller Company; 46-50.

d. Mon-Eco Industries, Inc.; 55-50.

e. Vimasco Corporation; WC-1/WC-5.

2. Water-Vapor Permeance: ASTM F 1249, 1.8 perms at 0.0625-inch dry film thickness.
3. Service Temperature Range: Minus 20 to plus 180 deg F.
4. Solids Content: 60 percent by volume and 66 percent by weight.
5. Color: White.

2.4 SEALANTS

A. Joint Sealants:

1. Joint Sealants for Cellular-Glass Products: Subject to compliance with requirements, provide one of the following:

a. Childers Brand, Specialty Construction Brands, Inc., a business of H. B. Fuller Company; CP-76.

b. Eagle Bridges - Marathon Industries; 405.

c. Foster Brand, Specialty Construction Brands, Inc., a business of H. B. Fuller Company; 30-45.

d. Mon-Eco Industries, Inc.; 44-05.

e. Pittsburgh Corning Corporation; Pittseal 444.

2. Materials shall be compatible with insulation materials, jackets, and substrates.
3. Permanently flexible, elastomeric sealant.
4. Service Temperature Range: Minus 100 to plus 300 deg F.
5. Color: White or gray.

B. FSK and Metal Jacket Flashing Sealants:

1. Products: Subject to compliance with requirements, provide one of the following:

a. Childers Brand, Specialty Construction Brands, Inc., a business of H. B. Fuller Company; CP-76.

b. Eagle Bridges - Marathon Industries; 405.

c. Foster Brand, Specialty Construction Brands, Inc., a business of H. B. Fuller Company; 95-44.

d. Mon-Eco Industries, Inc.; 44-05.

2. Materials shall be compatible with insulation materials, jackets, and substrates.
3. Fire- and water-resistant, flexible, elastomeric sealant.
4. Service Temperature Range: Minus 40 to plus 250 deg F.
5. Color: Aluminum.

C. ASJ Flashing Sealants, and Vinyl, PVDC, and PVC Jacket Flashing Sealants:

1. Products: Subject to compliance with requirements, available products that may be incorporated into the Work include, but are not limited to, the following:

a. Childers Brand, Specialty Construction Brands, Inc., a business of H. B. Fuller Company; CP-76.

2. Materials shall be compatible with insulation materials, jackets, and substrates.
3. Fire- and water-resistant, flexible, elastomeric sealant.
4. Service Temperature Range: Minus 40 to plus 250 deg F.
5. Color: White.

2.5 FACTORY-APPLIED JACKETS

A. Insulation system schedules indicate factory-applied jackets on various applications. When factory-applied jackets are indicated, comply with the following:

1. ASJ: White, kraft-paper, fiberglass-reinforced scrim with aluminum-foil backing; complying with ASTM C 1136, Type I.
2. ASJ-SSL: ASJ with self-sealing, pressure-sensitive, acrylic-based adhesive covered by a removable protective strip; complying with ASTM C 1136, Type I.
3. FSK Jacket: Aluminum-foil, fiberglass-reinforced scrim with kraft-paper backing; complying with ASTM C 1136, Type II.
4. FSP Jacket: Aluminum-foil, fiberglass-reinforced scrim with polyethylene backing; complying with ASTM C 1136, Type II.

2.6 FIELD-APPLIED JACKETS

A. Field-applied jackets shall comply with ASTM C 921, Type I, unless otherwise indicated.

B. FSK Jacket: Aluminum-foil-face, fiberglass-reinforced scrim with kraft-paper backing.

C. PVC Jacket: High-impact-resistant, UV-resistant PVC complying with ASTM D 1784, Class 16354-C; thickness as scheduled; roll stock ready for shop or field cutting and forming. Thickness is indicated in field-applied jacket schedules.

1. Products: Subject to compliance with requirements, provide one of the following:

a. Johns Manville; Zeston.

b. P.I.C. Plastics, Inc.; FG Series.

c. Proto Corporation; LoSmoke.

d. Speedline Corporation; SmokeSafe.

2. Adhesive: As recommended by jacket material manufacturer.
3. Color: White.
4. Factory-fabricated tank heads and tank side panels.

D. Aluminum Jacket: Comply with ASTM B 209, Alloy 3003, 3005, 3105, or 5005, Temper H-14.

1. Products: Subject to compliance with requirements, provide one of the following:

a. Childers Brand, Specialty Construction Brands, Inc., a business of H. B. Fuller Company; Metal Jacketing Systems.

b. ITW Insulation Systems; Aluminum and Stainless Steel Jacketing.

c. RPR Products, Inc.; Insul-Mate.

2. Finish and thickness are indicated in field-applied jacket schedules.
3. Moisture Barrier for Indoor Applications: 1-mil-thick, heat-bonded polyethylene and kraft paper.
4. Moisture Barrier for Outdoor Applications: 3-mil-thick, heat-bonded polyethylene and kraft paper.
5. Factory-Fabricated Fitting Covers:

a. Same material, finish, and thickness as jacket.

b. Preformed two-piece or gore, 45- and 90-degree, short- and long-radius elbows.

c. Tee covers.

d. Flange and union covers.

e. End caps.

f. Beveled collars.

g. Valve covers.

h. Field fabricate fitting covers only if factory-fabricated fitting covers are not available.

E. Self-Adhesive Outdoor Jacket: 60-mil-thick, laminated vapor barrier and waterproofing membrane for installation over insulation located aboveground outdoors; consisting of a rubberized bituminous resin on a crosslaminated polyethylene film covered with white aluminum-foil facing.

1. Products: Subject to compliance with requirements, available products that may be incorporated into the Work include, but are not limited to, the following:

a. Polyguard Products, Inc.; Alumaguard 60.

2.7 TAPES

A. ASJ Tape: White vapor-retarder tape matching factory-applied jacket with acrylic adhesive, complying with ASTM C 1136.

1. Products: Subject to compliance with requirements, provide one of the following:

   a. ABI, Ideal Tape Division; 428 AWF ASJ.

   b. Avery Dennison Corporation, Specialty Tapes Division; Fasson 0836.

   c. Compac Corporation; 104 and 105.

   d. <Insert manufacturer's name; product name or designation>.

2. Width: 3 inches.
3. Thickness: 11.5 mils.
4. Adhesion: 90 ounces force/inch in width.
5. Elongation: 2 percent.
6. Tensile Strength: 40 lbf/inch in width.
7. ASJ Tape Disks and Squares: Precut disks or squares of ASJ tape.

B. FSK Tape: Foil-face, vapor-retarder tape matching factory-applied jacket with acrylic adhesive; complying with ASTM C 1136.

1. Products: Subject to compliance with requirements, provide one of the following:

   a. ABI, Ideal Tape Division; 491 AWF FSK.

   b. Avery Dennison Corporation, Specialty Tapes Division; Fasson 0827.

   c. Compac Corporation; 110 and 111.

   d. Venture Tape; 1525 CW NT, 1528 CW, and 1528 CW/SQ.

2. Width: 3 inches.
3. Thickness: 6.5 mils.
4. Adhesion: 90 ounces force/inch in width.
5. Elongation: 2 percent.
6. Tensile Strength: 40 lbf/inch in width.
7. FSK Tape Disks and Squares: Precut disks or squares of FSK tape.

C. PVC Tape: White vapor-retarder tape matching field-applied PVC jacket with acrylic adhesive; suitable for indoor and outdoor applications.

1. Products: Subject to compliance with requirements, provide one of the following:

   a. ABI, Ideal Tape Division; 370 White PVC tape.

   b. Compac Corporation; 130.

   c. Venture Tape; 1506 CW NS.

2. Width: 2 inches.
3. Thickness: 6 mils.

4. Adhesion: 64 ounces force/inch in width.
5. Elongation: 500 percent.
6. Tensile Strength: 18 lbf/inch in width.

D. Aluminum-Foil Tape: Vapor-retarder tape with acrylic adhesive.

1. Products: Subject to compliance with requirements, provide one of the following:

a. ABI, Ideal Tape Division; 488 AWF.

b. Avery Dennison Corporation, Specialty Tapes Division; Fasson 0800.

c. Compac Corporation; 120.

d. Venture Tape; 3520 CW.

2. Width: 2 inches.
3. Thickness: 3.7 mils.
4. Adhesion: 100 ounces force/inch in width.
5. Elongation: 5 percent.
6. Tensile Strength: 34 lbf/inch in width.

2.8 SECUREMENTS

A. Aluminum Bands: ASTM B 209, Alloy 3003, 3005, 3105, or 5005; Temper H-14, 0.020 inch thick, 1/2 inch wide with wing seal or closed seal.

1. Products: Subject to compliance with requirements, available products that may be incorporated into the Work include, but are not limited to, the following:

a. ITW Insulation Systems; Gerrard Strapping and Seals.

b. RPR Products, Inc.; Insul-Mate Strapping, Seals, and Springs.

B. Insulation Pins and Hangers:

1. Metal, Adhesively Attached, Perforated-Base Insulation Hangers: Baseplate welded to projecting spindle that is capable of holding insulation, of thickness indicated, securely in position indicated when self-locking washer is in place.

a. Products: Subject to compliance with requirements, available products that may be incorporated into the Work include, but are not limited to, the following:

1) AGM Industries, Inc.; Tactoo Perforated Base Insul-Hangers.
2) GEMCO; Perforated Base.
3) Midwest Fasteners, Inc.; Spindle.

b. Baseplate: Perforated, galvanized carbon-steel sheet, 0.030 inch thick by 2 inches square.

c. Spindle: Aluminum, fully annealed, 0.106-inch-diameter shank, length to suit depth of insulation indicated.

d. Adhesive: Recommended by hanger manufacturer. Product with demonstrated capability to bond insulation hanger securely to substrates indicated without damaging insulation, hangers, and substrates.

2. Insulation-Retaining Washers: Self-locking washers formed from 0.016-inch-thick, galvanized-steel sheet, with beveled edge sized as required to hold insulation securely in place but not less than 1-1/2 inches in diameter.

a. Products: Subject to compliance with requirements, available products that may be incorporated into the Work include, but are not limited to, the following:

1) AGM Industries, Inc.; RC-150.
2) GEMCO; R-150.
3) Midwest Fasteners, Inc.; WA-150.
4) Nelson Stud Welding; Speed Clips.

b. Protect ends with capped self-locking washers incorporating a spring steel insert to ensure permanent retention of cap in exposed locations.

C. Staples: Outward-clinching insulation staples, nominal 3/4-inch-wide, stainless steel or Monel.

2.9 CORNER ANGLES

A. PVC Corner Angles: 30 mils thick, minimum 1 by 1 inch, PVC according to ASTM D 1784, Class 16354-C. White or color-coded to match adjacent surface.

B. Aluminum Corner Angles: 0.040 inch thick, minimum 1 by 1 inch, aluminum according to ASTM B 209, Alloy 3003, 3005, 3105, or 5005; Temper H-14.

PART 3 - EXECUTION

3.1 PREPARATION

A. Surface Preparation: Clean and dry surfaces to receive insulation. Remove materials that will adversely affect insulation application.

B. Coordinate insulation installation with the trade installing heat tracing. Comply with requirements for heat tracing that apply to insulation.

C. Mix insulating cements with clean potable water; if insulating cements are to be in contact with stainless-steel surfaces, use demineralized water.

3.2 GENERAL INSTALLATION REQUIREMENTS

A. Install insulation materials, accessories, and finishes with smooth, straight, and even surfaces; free of voids throughout the length of equipment.

B. Install insulation materials, forms, vapor barriers or retarders, jackets, and thicknesses required for each item of equipment as specified in insulation system schedules.

C. Install accessories compatible with insulation materials and suitable for the service. Install accessories that do not corrode, soften, or otherwise attack insulation or jacket in either wet or dry state.

D. Install insulation with longitudinal seams at top and bottom of horizontal runs.

E. Install multiple layers of insulation with longitudinal and end seams staggered.

F. Keep insulation materials dry during application and finishing.

G. Install insulation with tight longitudinal seams and end joints. Bond seams and joints with adhesive recommended by insulation material manufacturer.

H. Install insulation with least number of joints practical.

I. Where vapor barrier is indicated, seal joints, seams, and penetrations in insulation at hangers, supports, anchors, and other projections with vapor-barrier mastic.

1. Install insulation continuously through hangers and around anchor attachments.
2. For insulation application where vapor barriers are indicated, extend insulation on anchor legs from point of attachment to supported item to point of attachment to structure. Taper and seal ends at attachment to structure with vapor-barrier mastic.
3. Install insert materials and install insulation to tightly join the insert. Seal insulation to insulation inserts with adhesive or sealing compound recommended by insulation material manufacturer.
4. Cover inserts with jacket material matching adjacent insulation. Install shields over jacket, arranged to protect jacket from tear or puncture by hanger, support, and shield.

J. Apply adhesives, mastics, and sealants at manufacturer's recommended coverage rate and wet and dry film thicknesses.

K. Install insulation with factory-applied jackets as follows:

1. Draw jacket tight and smooth.
2. Cover circumferential joints with 3-inch-wide strips, of same material as insulation jacket. Secure strips with adhesive and outward clinching staples along both edges of strip, spaced 4 inches o.c.
3. Overlap jacket longitudinal seams at least 1-1/2 inches. Clean and dry surface to receive self-sealing lap. Staple laps with outward clinching staples along edge at 2 inches o.c.

    a. For below ambient services, apply vapor-barrier mastic over staples.

4. Cover joints and seams with tape, according to insulation material manufacturer's written instructions, to maintain vapor seal.
5. Where vapor barriers are indicated, apply vapor-barrier mastic on seams and joints.

L. Cut insulation in a manner to avoid compressing insulation more than 75 percent of its nominal thickness.

M. Finish installation with systems at operating conditions. Repair joint separations and cracking due to thermal movement.

N. Repair damaged insulation facings by applying same facing material over damaged areas. Extend patches at least 4 inches beyond damaged areas. Adhere, staple, and seal patches similar to butt joints.

O. For above ambient services, do not install insulation to the following:

1. Vibration-control devices.
2. Testing agency labels and stamps.
3. Nameplates and data plates.
4. Manholes.
5. Handholes.
6. Cleanouts.

3.3 INSTALLATION OF EQUIPMENT, TANK, AND VESSEL INSULATION

A. Mineral-Fiber, Pipe and Tank Insulation Installation for Tanks and Vessels: Secure insulation with adhesive and anchor pins and speed washers.

1. Apply adhesives according to manufacturer's recommended coverage rates per unit area, for 50 percent coverage of tank and vessel surfaces.
2. Groove and score insulation materials to fit as closely as possible to equipment, including contours. Bevel insulation edges for cylindrical surfaces for tight joints. Stagger end joints.
3. Protect exposed corners with secured corner angles.
4. Install adhesively attached or self-sticking insulation hangers and speed washers on sides of tanks and vessels as follows:

    a. Do not weld anchor pins to ASME-labeled pressure vessels.

    b. Select insulation hangers and adhesive that are compatible with service temperature and with substrate.

    c. On tanks and vessels, maximum anchor-pin spacing is 3 inches from insulation end joints, and 16 inches o.c. in both directions.

    d. Do not overcompress insulation during installation.

    e. Cut and miter insulation segments to fit curved sides and domed heads of tanks and vessels.

    f. Impale insulation over anchor pins and attach speed washers.

    g. Cut excess portion of pins extending beyond speed washers or bend parallel with insulation surface. Cover exposed pins and washers with tape matching insulation facing.

5. Secure each layer of insulation with stainless-steel or aluminum bands. Select band material compatible with insulation materials.
6. Where insulation hangers on equipment and vessels are not permitted or practical and where insulation support rings are not provided, install a girdle network for securing insulation. Stretch prestressed aircraft cable around the diameter of vessel and make taut with clamps, turnbuckles, or breather springs. Place one circumferential girdle around equipment approximately 6 inches from each end. Install wire or cable between two circumferential girdles 12 inches o.c. Install a wire ring around each end and around outer periphery of center openings, and stretch prestressed aircraft cable radially from the wire ring to nearest circumferential girdle. Install additional circumferential girdles along the body of equipment or tank at a minimum spacing of 48 inches o.c. Use this network for securing insulation with tie wire or bands.

7. Stagger joints between insulation layers at least 3 inches.
8. Install insulation in removable segments on equipment access doors, manholes, handholes, and other elements that require frequent removal for service and inspection.
9. Bevel and seal insulation ends around manholes, handholes, ASME stamps, and nameplates.
10. For equipment with surface temperatures below ambient, apply mastic to open ends, joints, seams, breaks, and punctures in insulation.

B. Flexible Elastomeric Thermal Insulation Installation for Tanks and Vessels: Install insulation over entire surface of tanks and vessels.

1. Apply 100 percent coverage of adhesive to surface with manufacturer's recommended adhesive.
2. Seal longitudinal seams and end joints.

C. Insulation Installation on Pumps:

1. Fabricate metal boxes lined with insulation. Fit boxes around pumps and coincide box joints with splits in pump casings. Fabricate joints with outward bolted flanges. Bolt flanges on 6-inch centers, starting at corners. Install 3/8-inch-diameter fasteners with wing nuts. Alternatively, secure the box sections together using a latching mechanism.
2. Fabricate boxes from galvanized steel, at least 0.040 inch thick.
3. For below ambient services, install a vapor barrier at seams, joints, and penetrations. Seal between flanges with replaceable gasket material to form a vapor barrier.

3.4 FIELD-APPLIED JACKET INSTALLATION

A. Where FSK jackets are indicated, install as follows:

1. Draw jacket material smooth and tight.
2. Install lap or joint strips with same material as jacket.
3. Secure jacket to insulation with manufacturer's recommended adhesive.
4. Install jacket with 1-1/2-inch laps at longitudinal seams and 3-inch-wide joint strips at end joints.
5. Seal openings, punctures, and breaks in vapor-retarder jackets and exposed insulation with vapor-barrier mastic.

B. Where PVC jackets are indicated, install with 1-inch overlap at longitudinal seams and end joints; for horizontal applications, install with longitudinal seams along top and bottom of tanks and vessels. Seal with manufacturer's recommended adhesive.

1. Apply two continuous beads of adhesive to seams and joints, one bead under lap and the finish bead along seam and joint edge.

3.5 FINISHES

A. Equipment Insulation with ASJ, Glass-Cloth, or Other Paintable Jacket Material: Paint jacket with paint system identified below and as specified in Section 09 9113 "Exterior Painting" and Section 09 9123 "Interior Painting."

1. Flat Acrylic Finish: Two finish coats over a primer that is compatible with jacket material and finish coat paint. Add fungicidal agent to render fabric mildew proof.

a. Finish Coat Material: Interior, flat, latex-emulsion size.

B. Flexible Elastomeric Thermal Insulation: After adhesive has fully cured, apply two coats of insulation manufacturer's recommended protective coating.

C. Color: Final color as selected by Architect. Vary first and second coats to allow visual inspection of the completed Work.

D. Do not field paint aluminum or stainless-steel jackets.

3.6 FIELD QUALITY CONTROL

A. Perform tests and inspections.

B. Tests and Inspections: Inspect field-insulated equipment, randomly selected by Architect, by removing field-applied jacket and insulation in layers in reverse order of their installation. Extent of inspection shall be limited to one location(s) for each type of equipment defined in the "Equipment Insulation Schedule" Article. For large equipment, remove only a portion adequate to determine compliance.

C. All insulation applications will be considered defective Work if sample inspection reveals noncompliance with requirements.

3.7 EQUIPMENT INSULATION SCHEDULE

A. Insulation materials and thicknesses are identified below. If more than one material is listed for a type of equipment, selection from materials listed is Contractor's option.

B. Insulate indoor and outdoor equipment that is not factory insulated.

C. Chilled-water pump insulation shall be one of the following:

1. Cellular Glass: 3 inches thick.
2. Mineral-Fiber Board: 2 inches thick and 2-lb/cu. ft. nominal density.

D. Heating-Hot-Water Pump Insulation: Mineral-Fiber Board: 2 inches thick and 2-lb/cu. ft. nominal density.

E. Chilled-water expansion/compression tank insulation shall be one of the following:

1. Cellular Glass: 1-1/2 inches thick.
2. Flexible Elastomeric: 1 inch thick.
3. Mineral-Fiber Pipe and Tank: 1 inch thick.

F. Heating-Hot-Water Expansion/Compression Tank Insulation: Mineral-Fiber Pipe and Tank: 1 inch thick.

G. Chilled-water air-separator insulation shall be one of the following:

1. Cellular Glass: 2 inches thick.
2. Flexible Elastomeric: 1 inch thick.
3. Mineral-Fiber Pipe and Tank: 1 inch thick.

H. Heating-Hot-Water Air-Separator Insulation: Mineral-Fiber Pipe and Tank: 2 inches thick.

3.8 INDOOR, FIELD-APPLIED JACKET SCHEDULE

A. Install jacket over insulation material. For insulation with factory-applied jacket, install the field-applied jacket over the factory-applied jacket.

B. If more than one material is listed, selection from materials listed is Contractor's option.

C. Equipment, Concealed:

1. None.

D. Equipment, Exposed, up to 48 Inches in Diameter or with Flat Surfaces up to 72 Inches:
1. PVC: 20 mils thick.

END OF SECTION

SECTION 23 2300

REFRIGERANT PIPING

PART 1 - GENERAL

1.1 SUMMARY

A. This Section includes refrigerant piping used for air-conditioning applications.

1.2 PERFORMANCE REQUIREMENTS

A. Line Test Pressure for Refrigerant R-134a:

1. Suction Lines for Air-Conditioning Applications: 115 psig.
2. Suction Lines for Heat-Pump Applications: 225 psig.
3. Hot-Gas and Liquid Lines: 225 psig.

B. Line Test Pressure for Refrigerant R-407C:

1. Suction Lines for Air-Conditioning Applications: 230 psig.
2. Suction Lines for Heat-Pump Applications: 380 psig.
3. Hot-Gas and Liquid Lines: 380 psig.

C. Line Test Pressure for Refrigerant R-410A:

1. Suction Lines for Air-Conditioning Applications: 300 psig.
2. Suction Lines for Heat-Pump Applications: 535 psig.
3. Hot-Gas and Liquid Lines: 535 psig.

1.3 ACTION SUBMITTALS

A. Product Data: For each type of valve and refrigerant piping specialty indicated. Include pressure drop based on manufacturer's test data.

B. Shop Drawings: Show layout of refrigerant piping and specialties, including pipe, tube, and fitting sizes, flow capacities, valve arrangements and locations, slopes of horizontal runs, oil traps, double risers, wall and floor penetrations, and equipment connection details. Show interface and spatial relationships between piping and equipment.

1. Refrigerant piping indicated on Drawings is schematic only. Size piping and design actual piping layout, including oil traps, double risers, specialties, and pipe and tube sizes to accommodate, as a minimum, equipment provided, elevation difference between compressor and evaporator, and length of piping to ensure proper operation and compliance with warranties of connected equipment.

1.4 INFORMATIONAL SUBMITTALS

A. Field quality-control test reports.

1.5 CLOSEOUT SUBMITTALS

A. Operation and maintenance data.

1.6 QUALITY ASSURANCE

A. Comply with ASHRAE 15, "Safety Code for Refrigeration Systems."

B. Comply with ASME B31.5, "Refrigeration Piping and Heat Transfer Components."

1.7 PRODUCT STORAGE AND HANDLING

A. Store piping in a clean and protected area with end caps in place to ensure that piping interior and exterior are clean when installed.

PART 2 - PRODUCTS

2.1 COPPER TUBE AND FITTINGS

A. Copper Tube: ASTM B 280, Type ACR.

B. Wrought-Copper Fittings: ASME B16.22.

C. Wrought-Copper Unions: ASME B16.22.

D. Solder Filler Metals: ASTM B 32. Use 95-5 tin antimony or alloy HB solder to join copper socket fittings on copper pipe.

E. Brazing Filler Metals: AWS A5.8.

F. Flexible Connectors:

1. Body: Tin-bronze bellows with woven, flexible, tinned-bronze-wire-reinforced protective jacket.
2. End Connections: Socket ends.
3. Offset Performance: Capable of minimum 3/4-inch misalignment in minimum 7-inch-long assembly.
4. Pressure Rating: Factory test at minimum 500 psig.
5. Maximum Operating Temperature: 250 deg F.

PART 3 - EXECUTION

3.1 PIPING APPLICATIONS

A. Hot-Gas and Liquid Lines, and Suction Lines: Copper, Type ACR, drawn-temper tubing and wrought-copper fittings with soldered joints.

3.2 PIPING INSTALLATION

A. Drawing plans, schematics, and diagrams indicate general location and arrangement of piping systems; indicated locations and arrangements were used to size pipe and calculate friction loss, expansion, pump sizing, and other design considerations. Install piping as indicated unless deviations to layout are approved on Shop Drawings.

B. Install refrigerant piping according to ASHRAE 15.

C. Install piping in concealed locations unless otherwise indicated and except in equipment rooms and service areas.

D. Install piping indicated to be exposed and piping in equipment rooms and service areas at right angles or parallel to building walls. Diagonal runs are prohibited unless specifically indicated otherwise.

E. Install piping above accessible ceilings to allow sufficient space for ceiling panel removal.

F. Install piping adjacent to machines to allow service and maintenance.

G. Install piping free of sags and bends.

H. Install fittings for changes in direction and branch connections.

I. Select system components with pressure rating equal to or greater than system operating pressure.

J. Install piping as short and direct as possible, with a minimum number of joints, elbows, and fittings.

K. Arrange piping to allow inspection and service of refrigeration equipment. Install valves and specialties in accessible locations to allow for service and inspection. Install access doors or panels as specified in Section 08 3113 "Access Doors and Frames" if valves or equipment requiring maintenance is concealed behind finished surfaces.

L. Install refrigerant piping in protective conduit where installed belowground.

M. Install refrigerant piping in rigid or flexible conduit in locations where exposed to mechanical injury.

N. Slope refrigerant piping as follows:

1. Install horizontal hot-gas discharge piping with a uniform slope downward away from compressor.
2. Install horizontal suction lines with a uniform slope downward to compressor.
3. Install traps and double risers to entrain oil in vertical runs.
4. Liquid lines may be installed level.

O. When brazing or soldering, remove solenoid-valve coils and sight glasses; also remove valve stems, seats, and packing, and accessible internal parts of refrigerant specialties. Do not apply heat near expansion-valve bulb.

P. Install piping with adequate clearance between pipe and adjacent walls and hangers or between pipes for insulation installation.

Q. Identify refrigerant piping and valves according to Section 23 0553 "Identification for HVAC Piping and Equipment."

R. Install sleeves for piping penetrations of walls, ceilings, and floors. Comply with requirements for sleeves specified in Section 23 0517 "Sleeves and Sleeve Seals for HVAC Piping."

S. Install sleeve seals for piping penetrations of concrete walls and slabs. Comply with requirements for sleeve seals specified in Section 23 0517 "Sleeves and Sleeve Seals for HVAC Piping."

T. Install escutcheons for piping penetrations of walls, ceilings, and floors. Comply with requirements for escutcheons specified in Section 23 0518 "Escutcheons for HVAC Piping."

3.3 PIPE JOINT CONSTRUCTION

A. Soldered Joints: Construct joints according to ASTM B 828 or CDA's "Copper Tube Handbook."

B. Brazed Joints: Construct joints according to AWS's "Brazing Handbook," Chapter "Pipe and Tube."

1. Use Type BcuP, copper-phosphorus alloy for joining copper socket fittings with copper pipe.
2. Use Type BAg, cadmium-free silver alloy for joining copper with bronze or steel.

3.4 HANGERS AND SUPPORTS

A. Hanger, support, and anchor products are specified in Section 23 0529 "Hangers and Supports for HVAC Piping and Equipment."

B. Install the following pipe attachments:

1. Adjustable steel clevis hangers for individual horizontal runs less than 20 feet long.
2. Roller hangers and spring hangers for individual horizontal runs 20 feet or longer.
3. Pipe Roller: MSS SP-58, Type 44 for multiple horizontal piping 20 feet or longer, supported on a trapeze.
4. Spring hangers to support vertical runs.
5. Copper-clad hangers and supports for hangers and supports in direct contact with copper pipe.

C. Install hangers for copper tubing with the following maximum spacing and minimum rod sizes:

1. NPS 1/2: Maximum span, 60 inches; minimum rod size, 1/4 inch.

2. NPS 5/8: Maximum span, 60 inches; minimum rod size, 1/4 inch.

3. NPS 1: Maximum span, 72 inches; minimum rod size, 1/4 inch.

4. NPS 1-1/4: Maximum span, 96 inches; minimum rod size, 3/8 inch.

5. NPS 1-1/2: Maximum span, 96 inches; minimum rod size, 3/8 inch.

6. NPS 2: Maximum span, 96 inches; minimum rod size, 3/8 inch.

7. NPS 2-1/2: Maximum span, 108 inches; minimum rod size, 3/8 inch.

8. NPS 3: Maximum span, 10 feet; minimum rod size, 3/8 inch.

9. NPS 4: Maximum span, 12 feet; minimum rod size, 1/2 inch.

D. Support multifloor vertical runs at least at each floor.

3.5 FIELD QUALITY CONTROL

A. Perform tests and inspections and prepare test reports.

B. Tests and Inspections:

1. Comply with ASME B31.5, Chapter VI.

2. Test refrigerant piping and specialties. Isolate compressor, condenser, evaporator, and safety devices from test pressure if they are not rated above the test pressure.
3. Test high- and low-pressure side piping of each system separately at not less than the pressures indicated in Part 1 "Performance Requirements" Article.

    a. Fill system with nitrogen to the required test pressure.
    b. System shall maintain test pressure at the manifold gage throughout duration of test.
    c. Test joints and fittings with electronic leak detector or by brushing a small amount of soap and glycerin solution over joints.
    d. Remake leaking joints using new materials, and retest until satisfactory results are achieved.

3.6 SYSTEM CHARGING

A. Charge system using the following procedures:

1. Install core in filter dryers after leak test but before evacuation.
2. Evacuate entire refrigerant system with a vacuum pump to 500 micrometers. If vacuum holds for 12 hours, system is ready for charging.
3. Break vacuum with refrigerant gas, allowing pressure to build up to 2 psig.
4. Charge system with a new filter-dryer core in charging line.

3.7 ADJUSTING

A. Adjust thermostatic expansion valve to obtain proper evaporator superheat.

B. Adjust high- and low-pressure switch settings to avoid short cycling in response to fluctuating suction pressure.

C. Adjust set-point temperature of air-conditioning or chilled-water controllers to the system design temperature.

D. Perform the following adjustments before operating the refrigeration system, according to manufacturer's written instructions:

1. Open shutoff valves in condenser water circuit.
2. Verify that compressor oil level is correct.
3. Open compressor suction and discharge valves.
4. Open refrigerant valves except bypass valves that are used for other purposes.
5. Check open compressor-motor alignment and verify lubrication for motors and bearings.

E. Replace core of replaceable filter dryer after system has been adjusted and after design flow rates and pressures are established.

END OF SECTION

SECTION 23 3113

METAL DUCTS

PART 1 - GENERAL

1.1 SUMMARY

A. Section Includes:

1. Rectangular ducts and fittings.
2. Round ducts and fittings.
3. Sheet metal materials.
4. Duct liner.
5. Sealants and gaskets.
6. Hangers and supports.

B. Related Sections:

1. Section 23 0593 "Testing, Adjusting, and Balancing for HVAC" for testing, adjusting, and balancing requirements for metal ducts.
2. Section 23 3300 "Air Duct Accessories" for dampers, sound-control devices, duct-mounting access doors and panels, turning vanes, and flexible ducts.

1.2 PERFORMANCE REQUIREMENTS

A. Airstream Surfaces: Surfaces in contact with the airstream shall comply with requirements in ASHRAE 62.1-2007.

1.3 ACTION SUBMITTALS

A. Product Data: For each type of product indicated.

B. Shop Drawings:

1. Fabrication, assembly, and installation, including plans, elevations, sections, components, and attachments to other work.
2. Factory- and shop-fabricated ducts and fittings.
3. Duct layout indicating sizes, configuration, and static-pressure classes.
4. Elevation of top of ducts.
5. Dimensions of main duct runs from building grid lines.
6. Fittings.
7. Reinforcement and spacing.
8. Seam and joint construction.
9. Penetrations through fire-rated and other partitions.
10. Equipment installation based on equipment being used on Project.
11. Locations for duct accessories, including dampers, turning vanes, and access doors and panels.
12. Hangers and supports, including methods for duct and building attachment and vibration isolation.

1.4 INFORMATIONAL SUBMITTALS

A. Coordination Drawings: Plans, drawn to scale, on which the following items are shown and coordinated with each other, using input from installers of the items involved:

1. Duct installation in congested spaces, indicating coordination with general construction, building components, and other building services. Indicate proposed changes to duct layout.
2. Suspended ceiling components.
3. Structural members to which duct will be attached.
4. Size and location of initial access modules for acoustical tile.
5. Penetrations of smoke barriers and fire-rated construction.
6. Items penetrating finished ceiling including the following:

a. Lighting fixtures.
b. Air outlets and inlets.
c. Speakers.
d. Sprinklers.
e. Access panels.
f. Perimeter moldings.

B. Welding certificates.

1.5 QUALITY ASSURANCE

A. ASHRAE Compliance: Applicable requirements in ASHRAE 62.1-2007, Section 5 - "Systems and Equipment" and Section 7 - "Construction and System Start-up."

B. ASHRAE/IESNA Compliance: Applicable requirements in ASHRAE/IESNA 90.1-2007, Section 6.4.4 - "HVAC System Construction and Insulation."

PART 2 - PRODUCTS

2.1 RECTANGULAR DUCTS AND FITTINGS

A. General Fabrication Requirements: Comply with SMACNA's "HVAC Duct Construction Standards - Metal and Flexible" based on indicated static-pressure class unless otherwise indicated.

B. Transverse Joints: Select joint types and fabricate according to SMACNA's "HVAC Duct Construction Standards - Metal and Flexible," Figure 2-1, "Rectangular Duct/Transverse Joints," for static-pressure class, applicable sealing requirements, materials involved, duct-support intervals, and other provisions in SMACNA's "HVAC Duct Construction Standards - Metal and Flexible."

C. Longitudinal Seams: Select seam types and fabricate according to SMACNA's "HVAC Duct Construction Standards - Metal and Flexible," Figure 2-2, "Rectangular Duct/Longitudinal Seams," for static-pressure class, applicable sealing requirements, materials involved, duct-support intervals, and other provisions in SMACNA's "HVAC Duct Construction Standards - Metal and Flexible."

D. Elbows, Transitions, Offsets, Branch Connections, and Other Duct Construction: Select types and fabricate according to SMACNA's "HVAC Duct Construction Standards - Metal and Flexible," Chapter 4, "Fittings and Other Construction," for static-pressure class, applicable sealing requirements, materials involved, duct-support intervals, and other provisions in SMACNA's "HVAC Duct Construction Standards - Metal and Flexible."

2.2 ROUND AND FLAT OVAL DUCTS AND FITTINGS

A. General Fabrication Requirements: Comply with SMACNA's "HVAC Duct Construction Standards - Metal and Flexible," Chapter 3, "Round, Oval, and Flexible Duct," based on indicated static-pressure class unless otherwise indicated.

1. Manufacturers: Subject to compliance with requirements, available manufacturers offering products that may be incorporated into the Work include, but are not limited to, the following:

a. Lindab Inc.

b. McGill AirFlow LLC.

c. SEMCO Incorporated.

d. Sheet Metal Connectors, Inc.

e. Spiral Manufacturing Co., Inc.

B. Transverse Joints: Select joint types and fabricate according to SMACNA's "HVAC Duct Construction Standards - Metal and Flexible," Figure 3-1, "Round Duct Transverse Joints," for static-pressure class, applicable sealing requirements, materials involved, duct-support intervals, and other provisions in SMACNA's "HVAC Duct Construction Standards - Metal and Flexible."

1. Transverse Joints in Ducts Larger Than 60 Inches in Diameter: Flanged.

C. Longitudinal Seams: Select seam types and fabricate according to SMACNA's "HVAC Duct Construction Standards - Metal and Flexible," Figure 3-2, "Round Duct Longitudinal Seams," for static-pressure class, applicable sealing requirements, materials involved, duct-support intervals, and other provisions in SMACNA's "HVAC Duct Construction Standards - Metal and Flexible."

1. Fabricate round ducts larger Than 90 inches in diameter with butt-welded longitudinal seams.

D. Tees and Laterals: Select types and fabricate according to SMACNA's "HVAC Duct Construction Standards - Metal and Flexible," Figure 3-5, "90 Degree Tees and Laterals," and Figure 3-6, "Conical Tees," for static-pressure class, applicable sealing requirements, materials involved, duct-support intervals, and other provisions in SMACNA's "HVAC Duct Construction Standards - Metal and Flexible."

2.3 DOUBLE-WALL ROUND AND FLAT-OVAL DUCTS AND FITTINGS

A. Manufacturers: Subject to compliance with requirements, available manufacturers offering products that may be incorporated into the Work include, but are not limited to, the following:

1. Lindab Inc.
2. McGill AirFlow LLC.
3. SEMCO Incorporated.
4. Sheet Metal Connectors, Inc.

B. Flat-Oval Ducts: Indicated dimensions are the duct width (major dimension) and diameter of the round sides connecting the flat portions of the duct (minor dimension) of the inner duct.

C. Outer Duct: Comply with SMACNA's "HVAC Duct Construction Standards - Metal and Flexible," Chapter 3, "Round, Oval, and Flexible Duct," based on static-pressure class unless otherwise indicated.

1. Transverse Joints: Select joint types and fabricate according to SMACNA's "HVAC Duct Construction Standards - Metal and Flexible," Figure 3-1, "Round Duct Transverse Joints," for static-pressure class, applicable sealing requirements, materials involved, duct-support intervals, and other provisions in SMACNA's "HVAC Duct Construction Standards - Metal and Flexible."
   a. Transverse Joints in Ducts Larger Than 60 Inches in Diameter: Flanged.

2. Longitudinal Seams: Select seam types and fabricate according to SMACNA's "HVAC Duct Construction Standards - Metal and Flexible," Figure 3-2, "Round Duct Longitudinal Seams," for static-pressure class, applicable sealing requirements, materials involved, duct-support intervals, and other provisions in SMACNA's "HVAC Duct Construction Standards - Metal and Flexible."
   a. Fabricate round ducts larger than 90 inches in diameter with butt-welded longitudinal seams.
   b. Fabricate flat-oval ducts larger than 72 inches in width (major dimension) with butt-welded longitudinal seams.

3. Tees and Laterals: Select types and fabricate according to SMACNA's "HVAC Duct Construction Standards - Metal and Flexible," Figure 3-5, "90 Degree Tees and Laterals," and Figure 3-6, "Conical Tees," for static-pressure class, applicable sealing requirements, materials involved, duct-support intervals, and other provisions in SMACNA's "HVAC Duct Construction Standards - Metal and Flexible."

D. Inner Duct: Minimum 0.028-inch perforated galvanized sheet steel having 3/32-inch-diameter perforations, with overall open area of 23 percent.

E. Interstitial Insulation: Fibrous-glass liner complying with ASTM C 1071, NFPA 90A, or NFPA 90B; and with NAIMA AH124, "Fibrous Glass Duct Liner Standard."

1. Maximum Thermal Conductivity: 0.27 Btu x in./h x sq. ft. x deg F at 75 deg F mean temperature.
2. Install spacers that position the inner duct at uniform distance from outer duct without compressing insulation.
3. Coat insulation with antimicrobial coating.
4. Cover insulation with polyester film complying with UL 181, Class 1.

2.4 SHEET METAL MATERIALS

A. General Material Requirements: Comply with SMACNA's "HVAC Duct Construction Standards - Metal and Flexible" for acceptable materials, material thicknesses, and duct construction methods unless otherwise indicated. Sheet metal materials shall be free of pitting, seam marks, roller marks, stains, discolorations, and other imperfections.

B. Galvanized Sheet Steel: Comply with ASTM A 653/A 653M.

1. Galvanized Coating Designation: G60.
2. Finishes for Surfaces Exposed to View: Mill phosphatized.

C. Carbon-Steel Sheets: Comply with ASTM A 1008/A 1008M, with oiled, matte finish for exposed ducts.

D. Stainless-Steel Sheets: Comply with ASTM A 480/A 480M, Type 304 or 316, as indicated in the "Duct Schedule" Article; cold rolled, annealed, sheet. Exposed surface finish shall be No. 2B, No. 2D, No. 3, or No. 4 as indicated in the "Duct Schedule" Article.

E. Aluminum Sheets: Comply with ASTM B 209 Alloy 3003, H14 temper; with mill finish for concealed ducts, and standard, one-side bright finish for duct surfaces exposed to view.

F. Reinforcement Shapes and Plates: ASTM A 36/A 36M, steel plates, shapes, and bars; black and galvanized.

1. Where black- and galvanized-steel shapes and plates are used to reinforce aluminum ducts, isolate the different metals with butyl rubber, neoprene, or EPDM gasket materials.

G. Tie Rods: Galvanized steel, 1/4-inch minimum diameter for lengths 36 inches or less; 3/8-inch minimum diameter for lengths longer than 36 inches.

2.5 DUCT LINER

A. Fibrous-Glass Duct Liner: Comply with ASTM C 1071, NFPA 90A, or NFPA 90B; and with NAIMA AH124, "Fibrous Glass Duct Liner Standard."

1. Manufacturers: Subject to compliance with requirements, provide products by one of the following:

a. CertainTeed Corporation; Insulation Group.
b. Johns Manville.
c. Knauf Insulation.
d. Owens Corning.

2. Maximum Thermal Conductivity:
a. Type I, Flexible: 0.27 Btu x in./h x sq. ft. x deg F at 75 deg F mean temperature.

3. Antimicrobial Erosion-Resistant Coating: Apply to the surface of the liner that will form the interior surface of the duct to act as a moisture repellent and erosion-resistant coating. Antimicrobial compound shall be tested for efficacy by an NRTL and registered by the EPA for use in HVAC systems.
4. Water-Based Liner Adhesive: Comply with NFPA 90A or NFPA 90B and with ASTM C 916.

B. Insulation Pins and Washers:

1. Cupped-Head, Capacitor-Discharge-Weld Pins: Copper- or zinc-coated steel pin, fully annealed for capacitor-discharge welding, 0.106-inch-diameter shank, length to suit depth of insulation indicated with integral 1-1/2-inch galvanized carbon-steel washer.

2. Insulation-Retaining Washers: Self-locking washers formed from 0.016-inch-thick galvanized steel; with beveled edge sized as required to hold insulation securely in place but not less than 1-1/2 inches in diameter.

C. Shop Application of Duct Liner: Comply with SMACNA's "HVAC Duct Construction Standards - Metal and Flexible," Figure 7-11, "Flexible Duct Liner Installation."

1. Adhere a single layer of indicated thickness of duct liner with at least 90 percent adhesive coverage at liner contact surface area. Attaining indicated thickness with multiple layers of duct liner is prohibited.
2. Apply adhesive to transverse edges of liner facing upstream that do not receive metal nosing.
3. Butt transverse joints without gaps, and coat joint with adhesive.
4. Fold and compress liner in corners of rectangular ducts or cut and fit to ensure butted-edge overlapping.
5. Do not apply liner in rectangular ducts with longitudinal joints, except at corners of ducts, unless duct size and dimensions of standard liner make longitudinal joints necessary.
6. Apply adhesive coating on longitudinal seams in ducts with air velocity of 2500 fpm.
7. Secure liner with mechanical fasteners 4 inches from corners and at intervals not exceeding 12 inches transversely; at 3 inches from transverse joints and at intervals not exceeding 18 inches longitudinally.
8. Secure transversely oriented liner edges facing the airstream with metal nosings that have either channel or "Z" profiles or are integrally formed from duct wall. Fabricate edge facings at the following locations:

    a. Fan discharges.
    b. Intervals of lined duct preceding unlined duct.
    c. Upstream edges of transverse joints in ducts where air velocities are higher than 2500 fpm or where indicated.

9. Secure insulation between perforated sheet metal inner duct of same thickness as specified for outer shell. Use mechanical fasteners that maintain inner duct at uniform distance from outer shell without compressing insulation.

    a. Sheet Metal Inner Duct Perforations: 3/32-inch diameter, with an overall open area of 23 percent.

10. Terminate inner ducts with buildouts attached to fire-damper sleeves, dampers, turning vane assemblies, or other devices. Fabricated buildouts (metal hat sections) or other buildout means are optional; when used, secure buildouts to duct walls with bolts, screws, rivets, or welds.

2.6 SEALANT AND GASKETS

A. General Sealant and Gasket Requirements: Surface-burning characteristics for sealants and gaskets shall be a maximum flame-spread index of 25 and a maximum smoke-developed index of 50 when tested according to UL 723; certified by an NRTL.

B. Water-Based Joint and Seam Sealant:

1. Application Method: Brush on.
2. Solids Content: Minimum 65 percent.
3. Shore A Hardness: Minimum 20.
4. Water resistant.

5. Mold and mildew resistant.
6. VOC: Maximum 75 g/L (less water).
7. Maximum Static-Pressure Class: 10-inch wg, positive and negative.
8. Service: Indoor or outdoor.
9. Substrate: Compatible with galvanized sheet steel (both PVC coated and bare), stainless steel, or aluminum sheets.

C. Flanged Joint Sealant: Comply with ASTM C 920.

1. General: Single-component, acid-curing, silicone, elastomeric.
2. Type: S.
3. Grade: NS.
4. Class: 25.
5. Use: O.

D. Flange Gaskets: Butyl rubber, neoprene, or EPDM polymer with polyisobutylene plasticizer.

E. Round Duct Joint O-Ring Seals:

1. Seal shall provide maximum 3 cfm/100 sq. ft. at 1-inch wg and shall be rated for10-inch wg static-pressure class, positive or negative.
2. EPDM O-ring to seal in concave bead in coupling or fitting spigot.
3. Double-lipped, EPDM O-ring seal, mechanically fastened to factory-fabricated couplings and fitting spigots.

2.7 HANGERS AND SUPPORTS

A. Hanger Rods for Noncorrosive Environments: Cadmium-plated steel rods and nuts.

B. Hanger Rods for Corrosive Environments: Electrogalvanized, all-thread rods or galvanized rods with threads painted with zinc-chromate primer after installation.

C. Strap and Rod Sizes: Comply with SMACNA's "HVAC Duct Construction Standards - Metal and Flexible," Table 5-1, "Rectangular Duct Hangers Minimum Size," and Table 5-2, "Minimum Hanger Sizes for Round Duct."

D. Steel Cables for Galvanized-Steel Ducts: Galvanized steel complying with ASTM A 603.

E. Steel Cables for Stainless-Steel Ducts: Stainless steel complying with ASTM A 492.

F. Steel Cable End Connections: Cadmium-plated steel assemblies with brackets, swivel, and bolts designed for duct hanger service; with an automatic-locking and clamping device.

G. Duct Attachments: Sheet metal screws, blind rivets, or self-tapping metal screws; compatible with duct materials.

H. Trapeze and Riser Supports:

1. Supports for Galvanized-Steel Ducts: Galvanized-steel shapes and plates.
2. Supports for Stainless-Steel Ducts: Stainless-steel shapes and plates.
3. Supports for Aluminum Ducts: Aluminum or galvanized steel coated with zinc chromate.

PART 3 - EXECUTION

3.1 DUCT INSTALLATION

A. Drawing plans, schematics, and diagrams indicate general location and arrangement of duct system. Indicated duct locations, configurations, and arrangements were used to size ducts and calculate friction loss for air-handling equipment sizing and for other design considerations. Install duct systems as indicated unless deviations to layout are approved on Shop Drawings and Coordination Drawings.

B. Install ducts according to SMACNA's "HVAC Duct Construction Standards - Metal and Flexible" unless otherwise indicated.

C. Install round ducts in maximum practical lengths.

D. Install ducts with fewest possible joints.

E. Install factory- or shop-fabricated fittings for changes in direction, size, and shape and for branch connections.

F. Unless otherwise indicated, install ducts vertically and horizontally, and parallel and perpendicular to building lines.

G. Install ducts close to walls, overhead construction, columns, and other structural and permanent enclosure elements of building.

H. Install ducts with a clearance of 1 inch, plus allowance for insulation thickness.

I. Route ducts to avoid passing through transformer vaults and electrical equipment rooms and enclosures.

J. Where ducts pass through non-fire-rated interior partitions and exterior walls and are exposed to view, cover the opening between the partition and duct or duct insulation with sheet metal flanges of same metal thickness as the duct. Overlap openings on four sides by at least 1-1/2 inches.

K. Where ducts pass through fire-rated interior partitions and exterior walls, install fire dampers. Comply with requirements in Section 23 3300 "Air Duct Accessories" for fire and smoke dampers.

L. Protect duct interiors from moisture, construction debris and dust, and other foreign materials. Comply with SMACNA's "IAQ Guidelines for Occupied Buildings Under Construction," Appendix G, "Duct Cleanliness for New Construction Guidelines."

M. In congested areas (with respect to other building components / services), coordinate the installed duct connection to its air device so as to provide the designed air flow without any restrictions.

3.2 INSTALLATION OF EXPOSED DUCTWORK

A. Protect ducts exposed in finished spaces from being dented, scratched, or damaged.

B. Trim duct sealants flush with metal. Create a smooth and uniform exposed bead. Do not use two-part tape sealing system.

C. Grind welds to provide smooth surface free of burrs, sharp edges, and weld splatter. When welding stainless steel with a No. 3 or 4 finish, grind the welds flush, polish the exposed welds, and treat the welds to remove discoloration caused by welding.

D. Maintain consistency, symmetry, and uniformity in the arrangement and fabrication of fittings, hangers and supports, duct accessories, and air outlets.

E. Repair or replace damaged sections and finished work that does not comply with these requirements.

3.3 ADDITIONAL INSTALLATION REQUIREMENTS FOR COMMERCIAL KITCHEN HOOD EXHAUST DUCT

A. Install commercial kitchen hood exhaust ducts without dips and traps that may hold grease, and sloped a minimum of 2 percent to drain grease back to the hood.

B. Install fire-rated access panel assemblies at each change in direction and at maximum intervals of 20 feet in horizontal ducts, and at every floor for vertical ducts, or as indicated on Drawings. Locate access panel on top or sides of duct a minimum of 1-1/2 inches from bottom of duct.

C. Do not penetrate fire-rated assemblies except as allowed by applicable building codes and authorities having jurisdiction.

3.4 DUCT SEALING

A. Seal ducts for duct static-pressure, seal classes, and leakage classes specified in "Duct Schedule" Article according to SMACNA's "HVAC Duct Construction Standards - Metal and Flexible."

3.5 HANGER AND SUPPORT INSTALLATION

A. Comply with SMACNA's "HVAC Duct Construction Standards - Metal and Flexible," Chapter 5, "Hangers and Supports."

B. Building Attachments: Concrete inserts, powder-actuated fasteners, or structural-steel fasteners appropriate for construction materials to which hangers are being attached.

1. Where practical, install concrete inserts before placing concrete.
2. Install powder-actuated concrete fasteners after concrete is placed and completely cured.
3. Use powder-actuated concrete fasteners for standard-weight aggregate concretes or for slabs more than 4 inches thick.
4. Do not use powder-actuated concrete fasteners for lightweight-aggregate concretes or for slabs less than 4 inches thick.

C. Hanger Spacing: Comply with SMACNA's "HVAC Duct Construction Standards - Metal and Flexible," Table 5-1, "Rectangular Duct Hangers Minimum Size," and Table 5-2, "Minimum Hanger Sizes for Round Duct," for maximum hanger spacing; install hangers and supports within 24 inches of each elbow and within 48 inches of each branch intersection.

D. Hangers Exposed to View: Threaded rod and angle or channel supports.

E. Support vertical ducts with steel angles or channel secured to the sides of the duct with welds, bolts, sheet metal screws, or blind rivets; support at each floor and at a maximum intervals of 16 feet.

F. Install upper attachments to structures. Select and size upper attachments with pull-out, tension, and shear capacities appropriate for supported loads and building materials where used.

3.6 CONNECTIONS

A. Make connections to equipment with flexible connectors complying with Section 23 3300 "Air Duct Accessories."

B. Comply with SMACNA's "HVAC Duct Construction Standards - Metal and Flexible" for branch, outlet and inlet, and terminal unit connections.

3.7 START UP

A. Air Balance: Comply with requirements in Section 23 0593 "Testing, Adjusting, and Balancing for HVAC."

3.8 DUCT CLEANING

A. Clean new duct system(s) before testing, adjusting, and balancing.

B. Use service openings for entry and inspection.

1. Create new openings and install access panels appropriate for duct static-pressure class if required for cleaning access. Provide insulated panels for insulated or lined duct. Patch insulation and liner as recommended by duct liner manufacturer. Comply with Section 23 3300 "Air Duct Accessories" for access panels and doors.
2. Disconnect and reconnect flexible ducts as needed for cleaning and inspection.
3. Remove and reinstall ceiling to gain access during the cleaning process.

C. Clean the following components by removing surface contaminants and deposits:

1. Air outlets and inlets (registers, grilles, and diffusers).
2. Supply, return, and exhaust fans including fan housings, plenums (except ceiling supply and return plenums), scrolls, blades or vanes, shafts, baffles, dampers, and drive assemblies.
3. Air-handling unit internal surfaces and components including mixing box, coil section, air wash systems, spray eliminators, condensate drain pans, humidifiers and dehumidifiers, filters and filter sections, and condensate collectors and drains.
4. Coils and related components.
5. Return-air ducts, dampers, actuators, and turning vanes except in ceiling plenums and mechanical equipment rooms.
6. Supply-air ducts, dampers, actuators, and turning vanes.
7. Dedicated exhaust and ventilation components and makeup air systems

3.9 DUCT SCHEDULE

A. Fabricate ducts with galvanized sheet steel except as otherwise indicated.

B. Supply Ducts:

1. Ducts Connected to Fan Coil Units, Furnaces, Heat Pumps, and Terminal Units:

a. Pressure Class: Positive 2-inch wg.
b. Minimum SMACNA Seal Class: A.
c. SMACNA Leakage Class for Rectangular: 12.
d. SMACNA Leakage Class for Round and Flat Oval: 12.

2. Ducts Connected to Constant-Volume Air-Handling Units:

a. Pressure Class: Positive 2-inch wg.
b. Minimum SMACNA Seal Class: A.
c. SMACNA Leakage Class for Rectangular: 6.
d. SMACNA Leakage Class for Round and Flat Oval: 6.

3. Ducts Connected to Variable-Air-Volume Air-Handling Units:
a. Pressure Class: Positive 6-inch wg.
b. Minimum SMACNA Seal Class: A.
c. SMACNA Leakage Class for Rectangular: 3.
d. SMACNA Leakage Class for Round and Flat Oval: 3.

4. Ducts Connected to Equipment Not Listed Above:

a. Pressure Class: Positive 4-inch wg.
b. Minimum SMACNA Seal Class: A.
c. SMACNA Leakage Class for Rectangular: 3.
d. SMACNA Leakage Class for Round and Flat Oval: 3.

C. Return Ducts:

1. Ducts Connected to Fan Coil Units, Furnaces, Heat Pumps, and Terminal Units:

a. Pressure Class: Positive or negative 2-inch wg.
b. Minimum SMACNA Seal Class: A .
c. SMACNA Leakage Class for Rectangular: 12.
d. SMACNA Leakage Class for Round and Flat Oval: 12.

2. Ducts Connected to Air-Handling Units:

a. Pressure Class: Positive or negative 2-inch wg.
b. Minimum SMACNA Seal Class: A.
c. SMACNA Leakage Class for Rectangular: 6.
d. SMACNA Leakage Class for Round and Flat Oval: 6.

3. Ducts Connected to Equipment Not Listed Above:

a. Pressure Class: Positive or negative 4-inch wg.
b. Minimum SMACNA Seal Class: A.
c. SMACNA Leakage Class for Rectangular: 3.
d. SMACNA Leakage Class for Round and Flat Oval: 3.

D. Exhaust Ducts:

1. Ducts Connected to Fans Exhausting (ASHRAE 62.1-2007, Class 1 and 2) Air:

    a. Pressure Class: Negative 2-inch wg.
    b. Minimum SMACNA Seal Class: A if negative pressure, and A if positive pressure.
    c. SMACNA Leakage Class for Rectangular: 12.
    d. SMACNA Leakage Class for Round and Flat Oval: 6.

2. Ducts Connected to Air-Handling Units:

    a. Pressure Class: Positive or negative 2-inch wg.
    b. Minimum SMACNA Seal Class: A if negative pressure, and A if positive pressure.
    c. SMACNA Leakage Class for Rectangular: 6.
    d. SMACNA Leakage Class for Round and Flat Oval: 6.

3. Ducts Connected to Commercial Kitchen Hoods: Comply with NFPA 96.

    a. Exposed to View: Type 304, stainless-steel sheet, No. 4 finish.
    b. Concealed: Carbon-steel sheet.
    c. Welded seams and joints.
    d. Pressure Class: Positive or negative 4-inch wg.
    e. Minimum SMACNA Seal Class: Welded seams, joints, and penetrations.
    f. SMACNA Leakage Class: 3.

4. Ducts Connected to Dishwasher Hoods:

    a. Type 304, stainless-steel sheet.
    b. Exposed to View: No. 4 finish.
    c. Concealed: No. 2D finish.
    d. Welded seams and flanged joints with watertight EPDM gaskets.
    e. Pressure Class: Positive or negative 3-inch wg.
    f. Minimum SMACNA Seal Class: Welded

E. Outdoor-Air (Not Filtered, Heated, or Cooled) Ducts:

1. Ducts Connected to Fan Coil Units, Furnaces, Heat Pumps, and Terminal Units:

    a. Pressure Class: Positive or negative 2-inch wg.
    b. Minimum SMACNA Seal Class: A.
    c. SMACNA Leakage Class for Rectangular: 12.
    d. SMACNA Leakage Class for Round and Flat Oval: 12.

2. Ducts Connected to Air-Handling Units:

    a. Pressure Class: Positive or negative 2-inch wg.
    b. Minimum SMACNA Seal Class: A.
    c. SMACNA Leakage Class for Rectangular: 6.
    d. SMACNA Leakage Class for Round and Flat Oval: 6.

3. Ducts Connected to Equipment Not Listed Above:

    a. Pressure Class: Positive or negative 2-inch wg.
    b. Minimum SMACNA Seal Class: A.
    c. SMACNA Leakage Class for Rectangular: 3.

d. SMACNA Leakage Class for Round and Flat Oval: 3.

F. Intermediate Reinforcement:

1. Galvanized-Steel Ducts: Galvanized steel.

2. Stainless-Steel Ducts:

a. Exposed to Airstream: Match duct material.
b. Not Exposed to Airstream: Galvanized.

3. Aluminum Ducts: Aluminum.

G. Liner:

1. Supply Air Ducts: Fibrous glass, Type I, 1 inch thick, only where noted otherwise on drawings.
2. Return Air Ducts: Fibrous glass, Type I, 1 inch thick, only where noted otherwise on drawings.

H. Elbow Configuration:

1. Rectangular Duct: Comply with SMACNA's "HVAC Duct Construction Standards - Metal and Flexible," Figure 4-2, "Rectangular Elbows."

a. Radius Type RE 1 with minimum 1.5 radius-to-diameter ratio.
b. Radius Type RE 3 with minimum 1.0 radius-to-diameter ratio and two vanes.
c. Mitered Type RE 2 with vanes complying with SMACNA's "HVAC Duct Construction Standards - Metal and Flexible," Figure 4-3, "Vanes and Vane Runners," and Figure 4-4, "Vane Support in Elbows."

2. Round Duct: Comply with SMACNA's "HVAC Duct Construction Standards - Metal and Flexible," Figure 3-4, "Round Duct Elbows."

a. Minimum Radius-to-Diameter Ratio and Elbow Segments: Comply with SMACNA's "HVAC Duct Construction Standards - Metal and Flexible," Table 3-1, "Mitered Elbows." Elbows with less than 90-degree change of direction have proportionately fewer segments.

1) Radius-to Diameter Ratio: 1.5.

b. Round Elbows, 12 Inches and Smaller in Diameter: Stamped or pleated.
c. Round Elbows, 14 Inches and Larger in Diameter: Welded.

I. Branch Configuration:

1. Rectangular Duct: Comply with SMACNA's "HVAC Duct Construction Standards - Metal and Flexible," Figure 4-6, "Branch Connection."

a. Rectangular Main to Rectangular Branch: 45-degree entry.
b. Rectangular Main to Round Branch: Spin in.

2. Round: Comply with SMACNA's "HVAC Duct Construction Standards - Metal and Flexible," Figure 3-5, "90 Degree Tees and Laterals," and Figure 3-6, "Conical Tees." Saddle taps are permitted in existing duct.

a. Velocity 1000 fpm or Lower: 90-degree tap.
b. Velocity 1000 to 1500 fpm: Conical tap.
c. Velocity 1500 fpm or Higher: 45-degree lateral.

3.10 FIELD QUALITY CONTROL

A. Perform tests and inspections.

B. Leakage Tests:

1. Comply with SMACNA's "HVAC Air Duct Leakage Test Manual." Submit a test report for each test.
2. Test the following systems:
   a. Supply Ducts with a Pressure Class of 2-Inch wg or Higher: Test representative duct sections, from sections installed, totaling no less than 25 percent of total installed duct area for each designated pressure class.

3. Disassemble, reassemble, and seal segments of systems to accommodate leakage testing and for compliance with test requirements.
4. Test for leaks before applying external insulation.
5. Conduct tests at static pressures equal to maximum design pressure of system or section being tested. If static-pressure classes are not indicated, test system at maximum system design pressure. Do not pressurize systems above maximum design operating pressure.
6. Give seven days advance notice for testing.

C. Duct System Cleanliness Tests:

1. Visually inspect duct system to ensure that no visible contaminants are present.

D. Duct system will be considered defective if it does not pass tests and inspections.

E. Prepare test and inspection reports.

END OF SECTION

SECTION 23 3300

AIR DUCT ACCESSORIES

PART 1 - GENERAL

1.1 SUMMARY

A. Section Includes:
1. Backdraft and pressure relief dampers.
2. Manual volume dampers.
3. Control dampers.
4. Fire dampers.
5. Smoke dampers.
6. Flange connectors.
7. Turning vanes.
8. Duct-mounted access doors.
9. Flexible connectors.
10. Flexible ducts.
11. Duct accessory hardware.

B. Related Requirements:
1. Section 28 3111 "Digital, Addressable Fire-Alarm System" for duct-mounted fire and smoke detectors.

1.2 ACTION SUBMITTALS

A. Product Data: For each type of product.

B. Shop Drawings: For duct accessories. Include plans, elevations, sections, details and attachments to other work.
1. Detail duct accessories fabrication and installation in ducts and other construction. Include dimensions, weights, loads, and required clearances; and method of field assembly into duct systems and other construction. Include the following:

a. Special fittings.
b. Manual volume damper installations.
c. Control-damper installations.
d. Fire-damper and smoke-damper installations, including sleeves; and duct-mounted access doors.
e. Wiring Diagrams: For power, signal, and control wiring.

1.3 CLOSEOUT SUBMITTALS

A. Operation and maintenance data.

PART 2 - PRODUCTS

2.1 ASSEMBLY DESCRIPTION

A. Comply with NFPA 90A, "Installation of Air Conditioning and Ventilating Systems," and with NFPA 90B, "Installation of Warm Air Heating and Air Conditioning Systems."

B. Comply with SMACNA's "HVAC Duct Construction Standards - Metal and Flexible" for acceptable materials, material thicknesses, and duct construction methods unless otherwise indicated. Sheet metal materials shall be free of pitting, seam marks, roller marks, stains, discolorations, and other imperfections.

2.2 MATERIALS

A. Galvanized Sheet Steel: Comply with ASTM A 653/A 653M.
   1. Galvanized Coating Designation: G60.
   2. Exposed-Surface Finish: Mill phosphatized.

B. Stainless-Steel Sheets: Comply with ASTM A 480/A 480M, Type 304, and having a No. 2 finish for concealed ducts and finish for exposed ducts.

C. Aluminum Sheets: Comply with ASTM B 209, Alloy 3003, Temper H14; with mill finish for concealed ducts and standard, 1-side bright finish for exposed ducts.

D. Extruded Aluminum: Comply with ASTM B 221, Alloy 6063, Temper T6.

E. Reinforcement Shapes and Plates: Galvanized-steel reinforcement where installed on galvanized sheet metal ducts; compatible materials for aluminum and stainless-steel ducts.

F. Tie Rods: Galvanized steel, 1/4-inch minimum diameter for lengths 36 inches or less; 3/8-inch minimum diameter for lengths longer than 36 inches.

2.3 BACKDRAFT AND PRESSURE RELIEF DAMPERS

A. Basis-of-Design Product: Subject to compliance with requirements, provide product indicated on Drawings or comparable product by one of the following:
   1. Greenheck Fan Corporation.
   2. Nailor Industries Inc.
   3. Ruskin Company.
   4. Vent Products Company, Inc.
   5. United Enertech
   6. Dace

B. Description: Gravity balanced.

C. Maximum Air Velocity: 2000 fpm.

D. Maximum System Pressure: 2-inch wg.

E. Frame: Hat-shaped, 0.05-inch-thick, galvanized sheet steel, with welded corners or mechanically attached and mounting flange.

F. Blades: Multiple single-piece blades, center pivoted, maximum 6-inch width, 0.025-inch-thick, roll-formed aluminum with sealed edges.

G. Blade Action: Parallel.

H. Blade Seals: Felt.

I. Blade Axles:
   1. Material: Nonferrous metal.
   2. Diameter: 0.20 inch.

J. Tie Bars and Brackets: Galvanized steel.

K. Return Spring: Adjustable tension.

L. Bearings: Steel ball or synthetic pivot bushings.

M. Accessories:
1. Adjustment device to permit setting for varying differential static pressure.
2. Counterweights and spring-assist kits for vertical airflow installations.
3. Screen Mounting: Rear mounted.
4. Screen Material: Galvanized steel.
5. Screen Type: Insect.
6. 90-degree stops.

2.4 MANUAL VOLUME DAMPERS

A. Standard, Steel, Manual Volume Dampers:
1. Manufacturers: Subject to compliance with requirements, provide products by one of the following:
a. Greenheck Fan Corporation.
b. McGill AirFlow LLC.
c. Nailor Industries Inc.
d. Ruskin Company.
e. Vent Products Company, Inc.
f. United Enertech
g. Dace
h. Carnes
2. Standard leakage rating, with linkage outside airstream.
3. Suitable for horizontal or vertical applications.
4. Frames:
a. Frame: Hat-shaped, 0.094-inch-thick, galvanized sheet steel.
b. Mitered and welded corners.
c. Flanges for attaching to walls and flangeless frames for installing in ducts.
5. Blades:
a. Multiple or single blade.
b. Parallel- or opposed-blade design.
c. Stiffen damper blades for stability.
d. Galvanized-steel, 0.064 inch thick.
6. Blade Axles: Galvanized steel.
7. Bearings:
a. Oil-impregnated bronze.
b. Dampers in ducts with pressure classes of 3-inch wg or less shall have axles full length of damper blades and bearings at both ends of operating shaft.
8. Tie Bars and Brackets: Galvanized steel.

B. Jackshaft:
1. Size: 1-inch diameter.
2. Material: Galvanized-steel pipe rotating within pipe-bearing assembly mounted on supports at each mullion and at each end of multiple-damper assemblies.
3. Length and Number of Mountings: As required to connect linkage of each damper in multiple-damper assembly.

C. Damper Hardware:

1. Zinc-plated, die-cast core with dial and handle made of 3/32-inch-thick zinc-plated steel, and a 3/4-inch hexagon locking nut.
2. Include center hole to suit damper operating-rod size.
3. Include elevated platform for insulated duct mounting.

2.5 CONTROL DAMPERS

A. Manufacturers: Subject to compliance with requirements, provide products by one of the following:
1. Arrow United Industries; a division of Mestek, Inc.
2. Carnes.
3. Greenheck Fan Corporation.
4. McGill AirFlow LLC.
5. Metal Form Manufacturing, Inc.
6. Nailor Industries Inc.
7. Ruskin Company.
8. Vent Products Company, Inc.
9. Young Regulator Company.

B. Frames:
1. Hat shaped.
2. 0.094-inch-thick, galvanized sheet steel.
3. Mitered and welded corners.

C. Blades:
1. Multiple blade with maximum blade width of 8 inches.
2. Parallel- and opposed-blade design.
3. Galvanized-steel.
4. 0.064 inch thick single skin.
5. Blade Edging: Closed-cell neoprene.

D. Blade Axles: 1/2-inch-diameter; stainless steel; blade-linkage hardware of zinc-plated steel and brass; ends sealed against blade bearings.
1. Operating Temperature Range: From minus 40 to plus 200 deg F.

E. Bearings:
1. Oil-impregnated bronze, molded synthetic or stainless-steel sleeve.
2. Dampers in ducts with pressure classes of 3-inch wg or less shall have axles full length of damper blades and bearings at both ends of operating shaft.
3. Thrust bearings at each end of every blade.

2.6 FIRE DAMPERS

A. Manufacturers: Subject to compliance with requirements, provide products by one of the following:
1. Arrow United Industries; a division of Mestek, Inc.
2. Carnes.
3. Greenheck Fan Corporation.
4. Nailor Industries Inc.
5. Prefco; Perfect Air Control, Inc.
6. Ruskin Company.
7. Vent Products Company, Inc.

B. Type: Static and dynamic; rated and labeled according to UL 555 by an NRTL.

C. Closing rating in ducts up to 4-inch wg static pressure class and minimum 2000-fpm velocity.

D. Fire Rating: 1-1/2 and 3 hours.

E. Frame: Fabricated with roll-formed, 0.034-inch-thick galvanized steel; with mitered and interlocking corners.

F. Mounting Sleeve: Factory- or field-installed, galvanized sheet steel.
   1. Minimum Thickness: 0.05 thick, as indicated, and of length to suit application.
   2. Exception: Omit sleeve where damper-frame width permits direct attachment of perimeter mounting angles on each side of wall or floor; thickness of damper frame must comply with sleeve requirements.

G. Mounting Orientation: Vertical or horizontal as indicated.

H. Blades: Roll-formed, interlocking, 0.034-inch-thick, galvanized sheet steel. In place of interlocking blades, use full-length, 0.034-inch-thick, galvanized-steel blade connectors.

I. Horizontal Dampers: Include blade lock and stainless-steel closure spring.

J. Heat-Responsive Device: Replaceable, 165 deg F rated, fusible links.

2.7 SMOKE DAMPERS

A. Manufacturers: Subject to compliance with requirements, provide products by one of the following :
   1. Air Balance Inc.; a division of Mestek, Inc.
   2. Carnes.
   3. Greenheck Fan Corporation.
   4. Nailor Industries Inc.
   5. Ruskin Company.

B. General Requirements: Label according to UL 555S by an NRTL.

C. Smoke Detector: Provided by fire alarm contractor.

D. Frame: Hat-shaped, 0.094-inch-thick, galvanized sheet steel, with welded or corners and mounting flange.

E. Blades: Roll-formed, horizontal, interlocking, 0.034-inch-thick, galvanized sheet steel.

F. Leakage: Class I.

G. Rated pressure and velocity to exceed design airflow conditions.

H. Mounting Sleeve: Factory-installed, 0.05-inch-thick, galvanized sheet steel; length to suit wall or floor application.

I. Damper Motors: Modulating or two-position action.

J. Comply with NEMA designation, temperature rating, service factor, enclosure type, and efficiency requirements for motors specified in Section 23 0513 "Common Motor Requirements for HVAC Equipment."
   1. Motor Sizes: Minimum size as indicated. If not indicated, large enough so driven load will not require motor to operate in service factor range above 1.0.

2. Controllers, Electrical Devices, and Wiring: Comply with requirements for electrical devices and connections specified in Section 23 0900 "Instrumentation and Control for HVAC."
3. Permanent-Split-Capacitor or Shaded-Pole Motors: With oil-immersed and sealed gear trains.
4. Spring-Return Motors: Equip with an integral spiral-spring mechanism where indicated. Enclose entire spring mechanism in a removable housing designed for service or adjustments. Size for running torque rating of 150 in. x lbf and breakaway torque rating of 150 in. x lbf.
5. Outdoor Motors and Motors in Outdoor-Air Intakes: Equip with O-ring gaskets designed to make motors weatherproof. Equip motors with internal heaters to permit normal operation at minus 40 deg F.
6. Nonspring-Return Motors: For dampers larger than 25 sq. ft., size motor for running torque rating of 150 in. x lbf and breakaway torque rating of 300 in. x lbf.

K. Accessories:
1. Auxiliary switches for signaling fan control or position indication.
2. Test and reset switches, damper mounted.

2.8 FLANGE CONNECTORS

A. Manufacturers: Subject to compliance with requirements, provide products by the following provide products by one of the following:
1. Ductmate Industries, Inc.
2. Nexus PDQ; Division of Shilco Holdings Inc.
3. Ward Industries, Inc.; a division of Hart & Cooley, Inc.

B. Description: Add-on or roll-formed, factory-fabricated, slide-on transverse flange connectors, gaskets, and components.

C. Material: Galvanized steel.

D. Gage and Shape: Match connecting ductwork.

2.9 TURNING VANES

A. Manufacturers: Subject to compliance with requirements, provide products by one of the following:
1. Ductmate Industries, Inc.
2. Duro Dyne Inc.
3. METALAIRE, Inc.
4. SEMCO Incorporated.
5. Ward Industries, Inc.; a division of Hart & Cooley, Inc.

B. Manufactured Turning Vanes for Metal Ducts: Curved blades of galvanized sheet steel; support with bars perpendicular to blades set; set into vane runners suitable for duct mounting.
1. Acoustic Turning Vanes: Fabricate airfoil-shaped aluminum extrusions with perforated faces and fibrous-glass fill.

C. General Requirements: Comply with SMACNA's "HVAC Duct Construction Standards - Metal and Flexible"; Figures 4-3, "Vanes and Vane Runners," and 4-4, "Vane Support in Elbows."

D. Vane Construction: Single wall for ducts up to 48 inches and double wall.for larger dimensions.

2.10 DUCT-MOUNTED ACCESS DOORS

A. Manufacturers: Subject to compliance with requirements, provide products by one of the following:
   1. American Warming and Ventilating; a division of Mestek, Inc.
   2. Cesco Products; a division of Mestek, Inc.
   3. Ductmate Industries, Inc.
   4. Flexmaster U.S.A., Inc.
   5. Greenheck Fan Corporation.
   6. McGill AirFlow LLC.
   7. Nailor Industries Inc.
   8. Ventfabrics, Inc.
   9. Ward Industries, Inc.; a division of Hart & Cooley, Inc.

B. Duct-Mounted Access Doors: Fabricate access panels according to SMACNA's "HVAC Duct Construction Standards - Metal and Flexible"; Figures 7-2, "Duct Access Doors and Panels," and 7-3, "Access Doors - Round Duct."
   1. Door:
      a. Double wall, rectangular.
      b. Galvanized sheet metal with insulation fill and thickness as indicated for duct pressure class.
      c. Vision panel.
      d. Hinges and Latches: 1-by-1-inchbutt or piano hinge and cam latches.
      e. Fabricate doors airtight and suitable for duct pressure class.
   2. Frame: Galvanized sheet steel, with bend-over tabs and foam gaskets.
   3. Number of Hinges and Locks:
      a. Access Doors Less Than 12 Inches Square: No hinges and two sash locks.
      b. Access Doors up to 18 Inches Square: Two hinges and two sash locks.
      c. Access Doors up to 24 by 48 Inches: Continuous and two compression latches.
      d. Access Doors Larger Than 24 by 48 Inches: Continuous and two compression latches with outside and inside handles.

C. Pressure Relief Access Door:
   1. Door and Frame Material: Galvanized sheet steel.
   2. Door: Double wall with insulation fill with metal thickness applicable for duct pressure class.
   3. Operation: Open outward for positive-pressure ducts and inward for negative-pressure ducts.
   4. Factory set at 3.0- to 8.0-inch wg.
   5. Doors close when pressures are within set-point range.
   6. Hinge: Continuous piano.
   7. Latches: Cam.
   8. Seal: Neoprene or foam rubber.
   9. Insulation Fill: 1-inch-thick, fibrous-glass or polystyrene-foam board.

2.11 DUCT ACCESS PANEL ASSEMBLIES

A. Manufacturers: Subject to compliance with requirements, provide products by one of the following:
   1. Ductmate Industries, Inc.
   2. Flame Gard, Inc.
   3. 3M.

B. Labeled according to UL 1978 by an NRTL.

C. Panel and Frame: Minimum thickness 0.0528-inch carbon steel.

D. Fasteners: Carbon steel. Panel fasteners shall not penetrate duct wall.

E. Gasket: Comply with NFPA 96; grease-tight, high-temperature ceramic fiber, rated for minimum 2000 deg F.

F. Minimum Pressure Rating: 10-inch wg, positive or negative.

2.12 FLEXIBLE CONNECTORS

A. Manufacturers: Subject to compliance with requirements, provide products by one of the following:
1. Ductmate Industries, Inc.
2. Duro Dyne Inc.
3. Ventfabrics, Inc.
4. Ward Industries, Inc.; a division of Hart & Cooley, Inc.

B. Materials: Flame-retardant or noncombustible fabrics.

C. Coatings and Adhesives: Comply with UL 181, Class 1.

D. Metal-Edged Connectors: Factory fabricated with a fabric strip 3-1/2 inches wide attached to two strips of 2-3/4-inch-wide, 0.028-inch-thick, galvanized sheet steel or 0.032-inch-thick aluminum sheets. Provide metal compatible with connected ducts.

E. Indoor System, Flexible Connector Fabric: Glass fabric double coated with neoprene.
1. Minimum Weight: 26 oz./sq. yd..
2. Tensile Strength: 480 lbf/inch in the warp and 360 lbf/inch in the filling.
3. Service Temperature: Minus 40 to plus 200 deg F.

F. Outdoor System, Flexible Connector Fabric: Glass fabric double coated with weatherproof, synthetic rubber resistant to UV rays and ozone.
1. Minimum Weight: 24 oz./sq. yd..
2. Tensile Strength: 530 lbf/inch in the warp and 440 lbf/inch in the filling.
3. Service Temperature: Minus 50 to plus 250 deg F.

2.13 FLEXIBLE DUCTS

A. Manufacturers: Subject to compliance with requirements, provide products by one of the following:
1. Flexmaster U.S.A., Inc.
2. McGill AirFlow LLC.
3. Ward Industries, Inc.; a division of Hart & Cooley, Inc.

B. Noninsulated, Flexible Duct: UL 181, Class 1, 2-ply vinyl film supported by helically wound, spring-steel wire.
1. Pressure Rating: 10-inch wg positive and 1.0-inch wg negative.
2. Maximum Air Velocity: 4000 fpm.
3. Temperature Range: Minus 10 to plus 160 deg F.

C. Insulated, Flexible Duct: UL 181, Class 1, aluminum laminate and polyester film with latex adhesive supported by helically wound, spring-steel wire; fibrous-glass insulation; vapor-barrier film.
1. Pressure Rating: 10-inch wg positive and 1.0-inch wg negative.
2. Maximum Air Velocity: 4000 fpm.

3. Temperature Range: Minus 20 to plus 210 deg F.
4. Insulation R-value: Comply with ASHRAE/IESNA 90.1-2007.

D. Flexible Duct Connectors:
1. Clamps: Nylon strap in sizes 3 through 18 inches, to suit duct size.

2.14 DUCT ACCESSORY HARDWARE

A. Instrument Test Holes: Cast iron or cast aluminum to suit duct material, including screw cap and gasket. Size to allow insertion of pitot tube and other testing instruments and of length to suit duct-insulation thickness.

B. Adhesives: High strength, quick setting, neoprene based, waterproof, and resistant to gasoline and grease.

PART 3 - EXECUTION

3.1 INSTALLATION

A. Install duct accessories according to applicable details in SMACNA's "HVAC Duct Construction Standards - Metal and Flexible" for metal ducts and in NAIMA AH116, "Fibrous Glass Duct Construction Standards," for fibrous-glass ducts.

B. Install duct accessories of materials suited to duct materials; use galvanized-steel accessories in galvanized-steel and fibrous-glass ducts, stainless-steel accessories in stainless-steel ducts, and aluminum accessories in aluminum ducts.

C. Install volume dampers at points on supply, return, and exhaust systems where branches extend from larger ducts. Where dampers are installed in ducts having duct liner, install dampers with hat channels of same depth as liner, and terminate liner with nosing at hat channel.
1. Install steel volume dampers in steel ducts.
2. Install aluminum volume dampers in aluminum ducts.

D. Set dampers to fully open position before testing, adjusting, and balancing.

E. Install test holes at fan inlets and outlets and elsewhere as indicated.

F. Install fire and smoke dampers according to UL listing.

G. Install duct access doors on sides of ducts to allow for inspecting, adjusting, and maintaining accessories and equipment at the following locations:
1. On both sides of duct coils.
2. Upstream and downstream from duct filters.
3. At outdoor-air intakes and mixed-air plenums.
4. At drain pans and seals.
5. Downstream from manual volume dampers, control dampers, backdraft dampers, and equipment.
6. Adjacent to and close enough to fire or smoke dampers, to reset or reinstall fusible links. Access doors for access to fire or smoke dampers having fusible links shall be pressure relief access doors and shall be outward operation for access doors installed upstream from dampers and inward operation for access doors installed downstream from dampers.
7. Upstream or downstream from duct silencers.
8. Control devices requiring inspection.

9. Elsewhere as indicated.

H. Install access doors with swing against duct static pressure.

I. Access Door Sizes:
1. One-Hand or Inspection Access: 8 by 5 inches.
2. Two-Hand Access: 12 by 6 inches.
3. Head and Hand Access: 18 by 10 inches.
4. Head and Shoulders Access: 21 by 14 inches.
5. Body Access: 25 by 14 inches.
6. Body plus Ladder Access: 25 by 17 inches.

J. Label access doors according to Section 23 0553 "Identification for HVAC Piping and Equipment" to indicate the purpose of access door.

K. Install flexible connectors to connect ducts to equipment.

L. Connect terminal units to supply ducts directly or with maximum 12-inch lengths of flexible duct. Do not use flexible ducts to change directions.

M. Connect diffusers or light troffer boots to ducts directly or with maximum 72-inch lengths of flexible duct clamped or strapped in place, except use rigid elbow for final connection to all diffusers. Limit to, except no flex duct allowed above gypsum ceilings. Support flex duct with strap that is ≥ 1” in width.

N. Connect flexible ducts to metal ducts with draw bands.

O. Install duct test holes where required for testing and balancing purposes.

3.2 FIELD QUALITY CONTROL

A. Tests and Inspections:
1. Operate dampers to verify full range of movement.
2. Inspect locations of access doors and verify that purpose of access door can be performed.
3. Operate fire and smoke dampers to verify full range of movement and verify that proper heat-response device is installed.
4. Inspect turning vanes for proper and secure installation.

END OF SECTION

SECTION 23 3423

HVAC POWER VENTILATORS

PART 1 - GENERAL

1.1 SUMMARY

A. Section Includes:
   1. Ceiling-mounted ventilators.

1.2 ACTION SUBMITTALS

A. Product Data: For each type of product indicated.

B. Shop Drawings: Include plans, elevations, sections, details, and attachments to other work.

   1. Detail equipment assemblies and indicate dimensions, weights, loads, required clearances, method of field assembly, components, and location and size of each field connection.
   2. Wiring Diagrams: For power, signal, and control wiring.
   3. Vibration Isolation Base Details: Detail fabrication including anchorages and attachments to structure and to supported equipment. Include adjustable motor bases, rails, and frames for equipment mounting.

1.3 CLOSEOUT SUBMITTALS

A. Operation and maintenance data.

1.4 QUALITY ASSURANCE

A. Electrical Components, Devices, and Accessories: Listed and labeled as defined in NFPA 70, by a qualified testing agency, and marked for intended location and application.

B. AMCA Compliance: Fans shall have AMCA-Certified performance ratings and shall bear the AMCA-Certified Ratings Seal.

PART 2 - PRODUCTS

2.1 CEILING-MOUNTED VENTILATORS

A. Basis-of-Design Product: Subject to compliance with requirements, provide product indicated on Drawings or comparable product by one of the following:
   1. Broan-NuTone LLC.
   2. Carnes Company.
   3. Greenheck Fan Corporation.
   4. Loren Cook Company.
   5. PennBarry.
   6. Twin City.

B. Housing: Steel, lined with acoustical insulation.

C. Fan Wheel: Centrifugal wheels directly mounted on motor shaft. Fan shrouds, motor, and fan wheel shall be removable for service.

D. Grille: Painted aluminum, louvered grille with flange on intake and thumbscrew attachment to fan housing.

E. Electrical Requirements: Junction box for electrical connection on housing and receptacle for motor plug-in.

F. Accessories:

1. Variable-Speed Controller: Solid-state control to reduce speed from 100 to less than 50 percent.
2. Manual Starter Switch: Single-pole rocker switch assembly with cover and pilot light.
3. Time-Delay Switch: Assembly with single-pole rocker switch, timer, and cover plate.
4. Motion Sensor: Motion detector with adjustable shutoff timer.
5. Ceiling Radiation Damper: Fire-rated assembly with ceramic blanket, stainless-steel springs, and fusible link.
6. Filter: Washable aluminum to fit between fan and grille.
7. Isolation: Rubber-in-shear vibration isolators.
8. Manufacturer's standard roof jack or wall cap, and transition fittings.

2.2 MOTORS

A. Comply with NEMA designation, temperature rating, service factor, enclosure type, and efficiency requirements for motors specified in Section 23 0513 "Common Motor Requirements for HVAC Equipment."

1. Motor Sizes: Minimum size as indicated. If not indicated, large enough so driven load will not require motor to operate in service factor range above 1.0.

2.3 SOURCE QUALITY CONTROL

A. Certify sound-power level ratings according to AMCA 301, "Methods for Calculating Fan Sound Ratings from Laboratory Test Data." Factory test fans according to AMCA 300, "Reverberant Room Method for Sound Testing of Fans." Label fans with the AMCA-Certified Ratings Seal.

B. Certify fan performance ratings, including flow rate, pressure, power, air density, speed of rotation, and efficiency by factory tests according to AMCA 210, "Laboratory Methods of Testing Fans for Aerodynamic Performance Rating." Label fans with the AMCA-Certified Ratings Seal.

PART 3 - EXECUTION

3.1 INSTALLATION

A. Secure roof-mounted fans to roof curbs with cadmium-plated hardware. .

B. Support units using restrained spring isolators having a static deflection of 1 inchVibration control devices are specified in Section 23 0548 "Vibration and Seismic Controls for HVAC Piping and Equipment."

C. Ceiling Units: Suspend units from structure; use steel wire or metal straps.

D. Support suspended units from structure using threaded steel rods and elastomeric hangers or spring hangers having a static deflection of 1 inch Install units with clearances for service and maintenance.

E. Label units according to requirements specified in Section 23 0553 "Identification for HVAC Piping and Equipment."

3.2 CONNECTIONS

A. Drawings indicate general arrangement of ducts and duct accessories. Make final duct connections with flexible connectors. Flexible connectors are specified in Section 23 3300 "Air Duct Accessories."

B. Install ducts adjacent to power ventilators to allow service and maintenance.

C. Ground equipment according to Section 26 0526 "Grounding and Bonding for Electrical Systems."

D. Connect wiring according to Section 26 0519 "Low-Voltage Electrical Power Conductors and Cables."

3.3 FIELD QUALITY CONTROL

A. Perform tests and inspections.

B. Tests and Inspections:

1. Verify that shipping, blocking, and bracing are removed.
2. Verify that unit is secure on mountings and supporting devices and that connections to ducts and electrical components are complete. Verify that proper thermal-overload protection is installed in motors, starters, and disconnect switches.
3. Verify that cleaning and adjusting are complete.
4. Disconnect fan drive from motor, verify proper motor rotation direction, and verify fan wheel free rotation and smooth bearing operation. Reconnect fan drive system, align and adjust belts, and install belt guards.
5. Adjust belt tension.
6. Adjust damper linkages for proper damper operation.
7. Verify lubrication for bearings and other moving parts.
8. Verify that manual and automatic volume control and fire and smoke dampers in connected ductwork systems are in fully open position.
9. Disable automatic temperature-control operators, energize motor and adjust fan to indicated rpm, and measure and record motor voltage and amperage.
10. Shut unit down and reconnect automatic temperature-control operators.
11. Remove and replace malfunctioning units and retest as specified above.

C. Test and adjust controls and safeties. Replace damaged and malfunctioning controls and equipment.

D. Prepare test and inspection reports.

3.4 ADJUSTING

A. Adjust damper linkages for proper damper operation.

B. Adjust belt tension.

C. Comply with requirements in Section 23 0593 "Testing, Adjusting, and Balancing for HVAC" for testing, adjusting, and balancing procedures.

D. Replace fan and motor pulleys as required to achieve design airflow.

E. Lubricate bearings.

END OF SECTION

SECTION 23 3600

AIR TERMINAL UNITS

PART 1 - GENERAL

1.1 SUMMARY

A. Section Includes:
   1. Shutoff, single-duct air terminal units.

1.2 ACTION SUBMITTALS

A. Product Data: For each type of product indicated.

B. Shop Drawings: For air terminal units. Include plans, elevations, sections, details, and attachments to other work.

C. Delegated-Design Submittal:
   1. Materials, fabrication, assembly, and spacing of hangers and supports.

1.3 INFORMATIONAL SUBMITTALS

A. Field quality-control reports.

1.4 CLOSEOUT SUBMITTALS

A. Operation and maintenance data.

1.5 QUALITY ASSURANCE

A. Electrical Components, Devices, and Accessories: Listed and labeled as defined in NFPA 70, by a qualified testing agency, and marked for intended location and application.

B. ASHRAE Compliance: Applicable requirements in ASHRAE 62.1-2007, Section 5 - "Systems and Equipment" and Section 7 - "Construction and System Start-Up."

1.6 WARRANTY

A. Special Warranty: Manufacturer agrees to repair or replace terminal units that fail in materials or workmanship within specified warranty period.
   1. Warranty Period: Five years from date of Substantial Completion.

PART 2 - PRODUCTS

2.1 SHUTOFF, SINGLE-DUCT AIR TERMINAL UNITS

A. Basis-of-Design Product: Subject to compliance with requirements, provide product indicated on Drawings or comparable product by one of the following:
   1. METALAIRE, Inc.
   2. Nailor Industries Inc.
   3. Price Industries.
   4. Titus.

5. Envirotec
6. Trane

B. Configuration: Volume-damper assembly inside unit casing with control components inside a protective metal shroud.

C. Casing: 0.034-inch steel, single wall.
1. Casing Lining: Adhesive attached, 1/2-inch-thick, coated, fibrous-glass duct liner complying with ASTM C 1071, and having a maximum flame-spread index of 25 and a maximum smoke-developed index of 50, for both insulation and adhesive, when tested according to ASTM E 84.

a. Cover liner with nonporous foil.
2. Air Inlet: Round stub connection or S-slip and drive connections for duct attachment.
3. Air Outlet: S-slip and drive connections, size matching inlet size.
4. Access: Removable panels for access to parts requiring service, adjustment, or maintenance; with airtight gasket.
5. Airstream Surfaces: Surfaces in contact with the airstream shall comply with requirements in ASHRAE 62.1-2007.

D. Regulator Assembly: System-air-powered bellows section incorporating polypropylene bellows for volume regulation and thermostatic control. Bellows shall operate at temperatures from 0 to 140 deg F, shall be impervious to moisture and fungus, shall be suitable for 10-inch wg static pressure, and shall be factory tested for leaks.

E. Volume Damper: Galvanized steel with peripheral gasket and self-lubricating bearings.
1. Maximum Damper Leakage: ARI 880 rated, 3 percent of nominal airflow at 6-inch wg inlet static pressure.
2. Damper Position: Normally open.

F. Hydronic Coils: Copper tube, with mechanically bonded aluminum fins spaced no closer than 0.1 inch, and rated for a minimum working pressure of 200 psig and a maximum entering-water temperature of 220 deg F. Include manual air vent and drain valve.

G. Direct Digital Controls: Bidirectional damper operators and microprocessor-based controller and room sensor.
1. Damper Actuator: 24 V, powered closed, spring return open.
2. Terminal Unit Controller: Pressure-independent, variable-air-volume controller with electronic airflow transducer with multipoint velocity sensor at air inlet, factory calibrated to minimum and maximum air volumes, and having the following features:

a. Occupied and unoccupied operating mode.
b. Remote reset of airflow or temperature set points.
c. Adjusting and monitoring with portable terminal.
d. Communication with existing temperature-control system.
3. Room Sensor: Wall mounted, with temperature set-point adjustment and access for connection of portable operator terminal.

2.2 HANGERS AND SUPPORTS

A. Hanger Rods for Noncorrosive Environments: Cadmium-plated steel rods and nuts.

B. Hanger Rods for Corrosive Environments: Electrogalvanized, all-thread rods or galvanized rods with threads painted with zinc-chromate primer after installation.

C. Steel Cables: Galvanized steel complying with ASTM A 603.

D. Steel Cable End Connections: Cadmium-plated steel assemblies with brackets, swivel, and bolts designed for duct hanger service; with an automatic-locking and clamping device.

E. Air Terminal Unit Attachments: Sheet metal screws, blind rivets, or self-tapping metal screws; compatible with duct materials.

F. Trapeze and Riser Supports: Steel shapes and plates for units with steel casings; aluminum for units with aluminum casings.

2.3 SOURCE QUALITY CONTROL

A. Factory Tests: Test assembled air terminal units according to ARI 880.
   1. Label each air terminal unit with plan number, nominal airflow, maximum and minimum factory-set airflows, coil type, and ARI certification seal.

PART 3 - EXECUTION

3.1 INSTALLATION

A. Install air terminal units according to NFPA 90A, "Standard for the Installation of Air Conditioning and Ventilating Systems."

B. Install air terminal units level and plumb. Maintain sufficient clearance for normal service and maintenance.

C. Install wall-mounted thermostats.

3.2 HANGER AND SUPPORT INSTALLATION

A. Comply with SMACNA's "HVAC Duct Construction Standards - Metal and Flexible," Chapter 5, "Hangers and Supports."

B. Building Attachments: Concrete inserts, powder-actuated fasteners, or structural-steel fasteners appropriate for construction materials to which hangers are being attached.
   1. Where practical, install concrete inserts before placing concrete.
   2. Install powder-actuated concrete fasteners after concrete is placed and completely cured.
   3. Use powder-actuated concrete fasteners for standard-weight aggregate concretes and for slabs more than 4 inches thick.
   4. Do not use powder-actuated concrete fasteners for lightweight-aggregate concretes and for slabs less than 4 inches thick.
   5. Do not use powder-actuated concrete fasteners for seismic restraints.

C. Hangers Exposed to View: Threaded rod and angle or channel supports.

D. Install upper attachments to structures. Select and size upper attachments with pull-out, tension, and shear capacities appropriate for supported loads and building materials where used.

3.3 CONNECTIONS

A. Install piping adjacent to air terminal unit to allow service and maintenance.

B. Hot-Water Piping: In addition to requirements in Section 23 2113 "Hydronic Piping" and Section 23 2116 "Hydronic Piping Specialties,"Section 15179 "Hydronic Piping Specialties,"

connect heating coils to supply with shutoff valve, strainer, control valve, and union or flange; and to return with balancing valve and union or flange.

C. Connect ducts to air terminal units according to Section 23 3113 "Metal Ducts."

D. Make connections to air terminal units with flexible connectors complying with requirements in Section 23 3300 "Air Duct Accessories."

3.4 IDENTIFICATION

A. Label each air terminal unit with plan number, nominal airflow, and maximum and minimum factory-set airflows. Comply with requirements in Section 23 0553 "Identification for HVAC Piping and Equipment" for equipment labels and warning signs and labels.

3.5 FIELD QUALITY CONTROL

A. Perform tests and inspections.
   1. Manufacturer's Field Service: Engage a factory-authorized service representative to inspect components, assemblies, and equipment installations, including connections, and to assist in testing.

B. Tests and Inspections:
   1. After installing air terminal units and after electrical circuitry has been energized, test for compliance with requirements.
   2. Leak Test: After installation, fill water coils and test for leaks. Repair leaks and retest until no leaks exist.
   3. Operational Test: After electrical circuitry has been energized, start units to confirm proper motor rotation and unit operation.
   4. Test and adjust controls and safeties. Replace damaged and malfunctioning controls and equipment.

C. Air terminal unit will be considered defective if it does not pass tests and inspections.

D. Prepare test and inspection reports.

3.6 STARTUP SERVICE

A. Perform startup service.
   1. Complete installation and startup checks according to manufacturer's written instructions.
   2. Verify that inlet duct connections are as recommended by air terminal unit manufacturer to achieve proper performance.
   3. Verify that controls and control enclosure are accessible.
   4. Verify that control connections are complete.
   5. Verify that nameplate and identification tag are visible.
   6. Verify that controls respond to inputs as specified.

3.7 DEMONSTRATION

A. Train Owner's maintenance personnel to adjust, operate, and maintain air terminal units.

END OF SECTION

SECTION 23 3713

DIFFUSERS, REGISTERS, AND GRILLES

PART 1 - GENERAL

1.1 SUMMARY

A. Section Includes:

1. Rectangular and square ceiling diffusers.
2. Perforated diffusers.
3. Louver face diffusers.
4. Linear slot diffusers.
5. Fixed face registers and grilles.
6. Linear bar grilles.
7. Fixed, extruded aluminum HVAC louvers.

B. Related Sections:

1. Section 23 3300 "Air Duct Accessories" for fire and smoke dampers and volume-control dampers not integral to diffusers, registers, and grilles.

1.2 ACTION SUBMITTALS

A. Product Data: For each type of product indicated, include the following:

1. Data Sheet: Indicate materials of construction, finish, and mounting details; and performance data including throw and drop, static-pressure drop, and noise ratings.
2. Diffuser, Register, and Grille Schedule: Indicate drawing designation, room location, quantity, model number, size, and accessories furnished.

PART 2 - PRODUCTS

2.1 CEILING DIFFUSERS

A. Rectangular and Square Ceiling Diffusers:

1. Basis-of-Design Product: Subject to compliance with requirements, provide product indicated on Drawings or comparable product by one of the following:
   a. Carnes.
   b. Krueger.
   c. METALAIRE, Inc.
   d. Nailor Industries Inc.
   e. Price Industries.
   f. Titus.
   g. Tuttle & Bailey

B. Perforated Diffuser:

1. Basis-of-Design Product: Subject to compliance with requirements, provide product indicated on Drawings or comparable product by one of the following:
   a. Carnes.
   b. Krueger.
   c. METALAIRE, Inc.
   d. Nailor Industries Inc.
   e. Price Industries.
   f. Titus.
   g. Tuttle & Bailey

C. Louver Face Diffuser:

1. Basis-of-Design Product: Subject to compliance with requirements, provide product indicated on Drawings or comparable product by one of the following:
   a. Carnes.
   b. Krueger.
   c. METALAIRE, Inc.
   d. Nailor Industries Inc.
   e. Price Industries.
   f. Titus.
   g. Tuttle & Bailey

2.2 CEILING LINEAR SLOT OUTLETS

A. Linear Bar Diffuser:

1. Basis-of-Design Product: Subject to compliance with requirements, provide product indicated on Drawings or comparable product by one of the following:
   a. Carnes.
   b. Krueger.
   c. METALAIRE, Inc.
   d. Nailor Industries Inc.
   e. Price Industries.
   f. Titus.
   g. Tuttle & Bailey

2.3 REGISTERS AND GRILLES

A. Register and Grilles:

1. Basis-of-Design Product: Subject to compliance with requirements, provide product indicated on Drawings or comparable product by one of the following:
   a. Carnes.
   b. Krueger.
   c. Nailor Industries Inc.
   d. Price Industries.
   e. Titus.
   f. Tuttle & Bailey

2.4 FIXED, EXTRUDED-ALUMINUM LOUVERS

A. Horizontal, Drainable-Blade Louver:

1. Basis-of-Design Product: Subject to compliance with requirements, provide product indicated on Drawings or comparable product by one of the following:
   a. Airolite Company, LLC (The).
   b. Arrow United Industries; a division of Mestek, Inc.
   c. Dowco Products Group; Safe Air of Illinois.
   d. Greenheck Fan Corporation.
   e. NCA Manufacturing, Inc.
   f. Ruskin Company; Tomkins PLC.
   g. United Enertech

2. Frame and Blade Nominal Thickness: Not less than 0.080 inch.
3. Mullion Type: Exposed.
4. AMCA Seal: Mark units with AMCA Certified Ratings Seal.
5. Louver Screens

   a. General: Provide screen at each exterior louver.

   b. Screen Location for Fixed Louvers: Interior face.

   c. Screening Type: Bird screening.

   d. Bird Screening: Aluminum, 1/2-inch-square mesh, 0.063-inch wire.

2.5 SOURCE QUALITY CONTROL

A. Verification of Performance: Rate diffusers, registers, and grilles according to ASHRAE 70, "Method of Testing for Rating the Performance of Air Outlets and Inlets."

PART 3 - EXECUTION

3.1 INSTALLATION

A. Install diffusers, registers, louvers, and grilles level and plumb.

B. Ceiling-Mounted Outlets and Inlets: Drawings indicate general arrangement of ducts, fittings, and accessories. Air outlet and inlet locations have been indicated to achieve design requirements for air volume, noise criteria, airflow pattern, throw, and pressure drop. Make final locations where indicated, as much as practical. For units installed in lay-in ceiling panels, locate units in the center of panel. Where architectural features or other items conflict with installation, notify Architect for a determination of final location.

C. Install diffusers, registers, and grilles with airtight connections to ducts and to allow service and maintenance of dampers, air extractors, and fire dampers.

D. Louver Installation.

1. Use concealed anchorages where possible. Provide brass or lead washers fitted to screws where required to protect metal surfaces and to make a weathertight connection.
2. Form closely fitted joints with exposed connections accurately located and secured.
3. Provide perimeter reveals and openings of uniform width for sealants and joint fillers, as indicated.

4. Protect unpainted galvanized and nonferrous-metal surfaces that are in contact with concrete, masonry, or dissimilar metals from corrosion and galvanic action by applying a heavy coating of bituminous paint or by separating surfaces with waterproof gaskets or nonmetallic flashing.
5. Install concealed gaskets, flashings, joint fillers, and insulation as louver installation progresses, where weathertight louver joints are required.

3.2 ADJUSTING

A. After installation, adjust diffusers, registers, and grilles to air patterns indicated, or as directed, before starting air balancing.

B. Restore louvers damaged during installation and construction so no evidence remains of corrective work. If results of restoration are unsuccessful, as determined by Architect, remove damaged units and replace with new units.

1. Touch up minor abrasions in finishes with air-dried coating that matches color and gloss of, and is compatible with, factory-applied finish coating.

END OF SECTION

SECTION 23 7413

PACKAGED, OUTDOOR, CENTRAL-STATION AIR-HANDLING UNITS

PART 1 - GENERAL

1.1 SUMMARY

A. This Section includes packaged, outdoor, central-station air-handling units (rooftop units) with the following components and accessories:
   1. Direct-expansion cooling.
   2. Gas furnace.
   3. Economizer outdoor- and return-air damper section.
   4. Integral, space temperature controls.
   5. Roof curbs.

1.2 DEFINITIONS

A. Outdoor-Air Refrigerant Coil: Refrigerant coil in the outdoor-air stream to reject heat during cooling operations and to absorb heat during heating operations. "Outdoor air" is defined as the air outside the building or taken from outdoors and not previously circulated through the system.

B. Outdoor-Air Refrigerant-Coil Fan: The outdoor-air refrigerant-coil fan in RTUs. "Outdoor air" is defined as the air outside the building or taken from outdoors and not previously circulated through the system.

C. RTU: Rooftop unit. As used in this Section, this abbreviation means packaged, outdoor, central-station air-handling units. This abbreviation is used regardless of whether the unit is mounted on the roof or on a concrete base on ground.

D. Supply-Air Fan: The fan providing supply-air to conditioned space. "Supply air" is defined as the air entering a space from air-conditioning, heating, or ventilating apparatus.

E. Supply-Air Refrigerant Coil: Refrigerant coil in the supply-air stream to absorb heat (provide cooling) during cooling operations and to reject heat (provide heating) during heating operations. "Supply air" is defined as the air entering a space from air-conditioning, heating, or ventilating apparatus.

1.3 ACTION SUBMITTALS

A. Product Data: Include manufacturer's technical data for each RTU, including rated capacities, dimensions, required clearances, characteristics, furnished specialties, and accessories.

B. Shop Drawings: Detail equipment assemblies and indicate dimensions, weights, loads, required clearances, method of field assembly, components, and location and size of each field connection.
   1. Wiring Diagrams: Power, signal, and control wiring.

1.4 INFORMATIONAL SUBMITTALS

A. Field quality-control test reports.

B. Warranty.

1.5 CLOSEOUT SUBMITTALS

A. Operation and maintenance data.

1.6 QUALITY ASSURANCE

A. ARI Compliance:
   1. Comply with ARI 210/240 and ARI 340/360 for testing and rating energy efficiencies for RTUs.
   2. Comply with ARI 270 for testing and rating sound performance for RTUs.

B. ASHRAE Compliance:
   1. Comply with ASHRAE 15 for refrigerant system safety.
   2. Comply with ASHRAE 33 for methods of testing cooling and heating coils.
   3. Comply with applicable requirements in ASHRAE 62.1, Section 5 - "Systems and Equipment" and Section 7 - "Construction and Startup."

C. ASHRAE/IESNA 90.1 Compliance: Applicable requirements in ASHRAE/IESNA 90.1, Section 6 - "Heating, Ventilating, and Air-Conditioning."

D. NFPA Compliance: Comply with NFPA 90A and NFPA 90B.

E. UL Compliance: Comply with UL 1995.

F. Electrical Components, Devices, and Accessories: Listed and labeled as defined in NFPA 70, Article 100, by a testing agency acceptable to authorities having jurisdiction, and marked for intended use.

1.7 WARRANTY

A. Special Warranty: Manufacturer's standard form in which manufacturer agrees to replace components of RTUs that fail in materials or workmanship within specified warranty period.
   1. Warranty Period for Compressors: Manufacturer's standard, but not less than five years from date of Substantial Completion.
   2. Warranty Period for Gas Furnace Heat Exchangers: Manufacturer's standard, but not less than five years from date of Substantial Completion.
   3. Warranty Period for Solid-State Ignition Modules: Manufacturer's standard.
   4. Warranty Period for Control Boards: Manufacturer's standard.

PART 2 - PRODUCTS

2.1 MANUFACTURERS

A. Basis-of-Design Product: Subject to compliance with requirements, provide the product indicated on Drawings or a comparable product by one of the following:
   1. AAON, Inc.
   2. Carrier Corporation.
   3. Lennox Industries Inc.
   4. Trane; American Standard Companies, Inc.
   5. Daikin McQuay International.
   6. York-Johnson Controls

2.2 CASING

A. General Fabrication Requirements for Casings: Formed and reinforced insulated panels, fabricated to allow removal for access to internal parts and components, with joints between sections sealed.

B. Exterior Casing Material: Galvanized steel with factory-painted finish, with pitched roof panels and knockouts with grommet seals for electrical and piping connections and lifting lugs.
   1. Exterior Casing Thickness: 0.052 inch thick.

C. Casing Insulation and Adhesive: Comply with NFPA 90A or NFPA 90B.
   1. Materials: ASTM C 1071, Type I.
   2. Thickness: 2 inch, R-13 minimum.

D. Condensate Drain Pans: Formed polymer complying with ASHRAE 62.1.
   1. Drain Connections: Threaded nipple.

E. Airstream Surfaces: Surfaces in contact with the airstream shall comply with requirements in ASHRAE 62.1.

2.3 FANS

A. Direct-Driven Supply-Air Fans: Forward curved, centrifugal plenum fan; with permanently lubricated, motor installed on an adjustable fan base resiliently mounted in the casing. Aluminum or painted-steel wheels, and galvanized- or painted-steel fan scrolls.

B. Condenser-Coil Fan: Propeller, mounted on shaft of permanently lubricated motor.

C. Fan Motor: Comply with requirements in Section 23 0513 "Common Motor Requirements for HVAC Equipment."

2.4 COILS

A. Supply-Air Refrigerant Coil:
   1. Aluminum-plate fin and seamless copper tube in steel casing with equalizing-type vertical distributor.
   2. Polymer strip shall prevent all copper coil from contacting steel coil frame or condensate

pan.
3. Coil Split: Interlaced.
4. Condensate Drain Pan: Polymer with pitch and drain connections complying with ASHRAE 62.1.

2.5 REFRIGERANT CIRCUIT COMPONENTS

A. Compressor: Hermetic scroll, mounted on vibration isolators; with internal overcurrent and high-temperature protection, internal pressure relief, and crankcase heater.

B. Refrigeration Specialties:
1. Refrigerant: R-410A.
2. Expansion valve with replaceable thermostatic element.
3. Refrigerant filter/dryer.
4. Manual-reset high-pressure safety switch.
5. Automatic-reset low-pressure safety switch.
6. Minimum off-time relay.
7. Automatic-reset compressor motor thermal overload.
8. Brass service valves installed in compressor suction and liquid lines.

2.6 AIR FILTRATION

A. Minimum arrestance according to ASHRAE 52.1, and a minimum efficiency reporting value (MERV) according to ASHRAE 52.2.
1. Pleated: Minimum 90 percent arrestance, and MERV 7.

2.7 GAS FURNACE

A. Description: Factory assembled, piped, and wired; complying with ANSI Z21.47 and NFPA 54.
1. CSA Approval: Designed and certified by and bearing label of CSA.

B. Burners: Stainless steel.
1. Fuel: Natural gas.
2. Ignition: Electronically controlled electric spark or hot-surface igniter with flame sensor.

C. Heat-Exchanger and Drain Pan: Aluminum coated steel.

D. Venting: Gravity vented with vertical extension.

E. Safety Controls:
1. Gas Control Valve: Single Stage.
2. Gas Train: Single-body, regulated, redundant, 24-V ac gas valve assembly containing pilot solenoid valve, pilot filter, pressure regulator, pilot shutoff, and manual shutoff.

2.8 DAMPERS

A. Outdoor- and Return-Air Mixing Dampers: Parallel- or opposed-blade galvanized-steel dampers mechanically fastened to cadmium plated for galvanized-steel operating rod in reinforced cabinet. .
1. Damper Motor: Modulating with adjustable minimum position.

2. Relief-Air Damper: Gravity actuated or motorized, as required by ASHRAE/IESNA 90.1, with bird screen and hood.

2.9 ELECTRICAL POWER CONNECTION

A. Provide for single connection of power to unit with field installed unit mounted disconnect switch and control-circuit transformer with built-in overcurrent protection.

2.10 CONTROLS

A. Basic Unit Controls:
1. Control-voltage transformer.
2. Wall-mounted thermostat or sensor with the following features:

a. Heat-cool-off switch.
b. Fan on-auto switch.
c. Fan-speed switch.
d. Automatic changeover.
e. Adjustable deadband.
f. Exposed set point.
g. Exposed indication.
h. Degree F indication.
i. Unoccupied-period-override push button.

2.11 ACCESSORIES

A. Hail guards of galvanized steel, painted to match casing.

2.12 ROOF CURBS

A. Materials: Galvanized steel with corrosion-protection coating, watertight gaskets, and factory-installed wood nailer; complying with NRCA standards

PART 3 - EXECUTION

3.1 INSTALLATION

A. Roof Curb: Install on roof structure or concrete base, level and secure, according to NRCA's "Low-Slope Membrane Roofing Construction Details Manual," Illustration "Raised Curb Detail for Rooftop Air Handling Units and Ducts." Install RTUs on curbs and coordinate roof penetrations and flashing with roof construction specified in Section 07 7200 "Roof Accessories." Secure RTUs to upper curb rail, and secure curb base to roof framing or concrete base with anchor bolts.

B. Install condensate drain, minimum connection size, with trap and indirect connection to nearest roof drain or area drain.

C. Install piping adjacent to RTUs to allow service and maintenance.

1. Gas Piping: Comply with applicable requirements in Section 23 1123 "Facility Natural-Gas Piping." Connect gas piping to burner, full size of gas train inlet, and connect with union and shutoff valve with sufficient clearance for burner removal and service.

D. Duct installation requirements are specified in other HVAC Sections. Drawings indicate the general arrangement of ducts.

3.2 FIELD QUALITY CONTROL

A. Manufacturer's Field Service: Engage a factory-authorized service representative to inspect, test, and adjust components, assemblies, and equipment installations, including connections. Report results in writing.

B. Perform tests and inspections and prepare test reports.
1. Manufacturer's Field Service: Engage a factory-authorized service representative to inspect components, assemblies, and equipment installations, including connections, and to assist in testing. Report results in writing.

C. Tests and Inspections:
1. After installing RTUs and after electrical circuitry has been energized, test units for compliance with requirements.
2. Inspect for and remove shipping bolts, blocks, and tie-down straps.
3. Operational Test: After electrical circuitry has been energized, start units to confirm proper motor rotation and unit operation.
4. Test and adjust controls and safeties. Replace damaged and malfunctioning controls and equipment.

D. Remove and replace malfunctioning units and retest as specified above.

3.3 CLEANING AND ADJUSTING

A. Occupancy Adjustments: When requested within 12 months of date of Substantial Completion, provide on-site assistance in adjusting system to suit actual occupied conditions. Provide up to one visit to site during other-than-normal occupancy hours for this purpose.

B. After completing system installation and testing, adjusting, and balancing RTU and air-distribution systems, clean filter housings and install new filters.

END OF SECTION

Oklahoma State University - Silencer Specification

SECTION 23 7500

HVAC SILENCERS

PART 1 - GENERAL

1.1 RELATED DOCUMENTS

A. Drawings and general provisions of the Contract, including General and Supplementary Conditions and Division 01 Specification Sections, apply to this Section.

1.2 SUMMARY

A. Section Includes:

1. Duct silencers.

B. Related Sections:

1. Division 23 Section "Vibration and Seismic Controls for HVAC Piping and Equipment".

1.3 SUBMITTALS

A. Performance Data:

1. Silencer manufacturer to provide submittal drawings detailing all duct silencer data specified in the mechanical drawing schedule.

2. The silencer manufacturer shall provide, for approval, acoustical system calculations for all duct systems with silencers to demonstrate that the submitted silencers will meet NC-35 in the classroom space.

PART 2 - PRODUCTS

2.1 DUCT SILENCERS

A. Basis-of-Design Product: Silencers shall be Vibro-Acoustics.

1. Alternate manufacturers must request and obtain written approval by the Engineer to bid the project at least 10 days prior to the bid due-date.

B. General Requirements:

1. Silencers shall be of the size, configuration, capacity and acoustic performance as scheduled on the drawings. All silencers shall be factory fabricated and supplied by the same manufacturer.
2. Silencer inlet and outlet connection dimensions must be equal to the duct sizes shown on the drawings. Duct transitions at silencers are not permitted unless shown on the contract drawings.
3. Silencers shall be constructed in accordance with ASHRAE and SMACNA standards for the pressure and velocity classification specified for the air distribution system in which it is installed. Material gauges noted in other sections are minimums. Material gauges shall be increased as required for the system pressure and velocity classification. The silencers shall not fail structurally when subjected to a differential air pressure of 8 inches water gauge.
4. All casing seams and joints shall be lock-formed and sealed or stitch welded and sealed to provide leakage-resistant construction. Airtight construction shall be achieved by use of a duct-sealing compound supplied and installed by the contractor at the jobsite.
5. All perforated steel shall be adequately stiffened to insure flatness and form. All spot welds shall be painted.
6. Fire-Performance Characteristics: Silencer assemblies, including acoustic media fill and sealants shall have flame-spread index not exceeding 25 and smoke-developed index not exceeding 50 when tested according to ASTM E 84, NFPA 255 or UL 723.
7. Airstream Surfaces: Surfaces in contact with the airstream shall comply with requirements in ASHRAE 62.1-2007.

C. Rectangular Elbow Silencers including models RED and EX-RED: Outer casing shall be ASTM A 653/A 653M, G90 galvanized sheet steel, 18 gauge. All acoustical splitters shall be internally radiused and aerodynamically designed for efficient turning of the air. Half and full splitters are required as necessary to achieve the scheduled insertion loss. All elbow silencers with a turning cross-section dimension greater than 48” shall have at least two half splitters and one full splitter.

D. Inner perforated metal liner: ASTM A 653/A 653M, G90 galvanized sheet steel.

1. Rectangular Elbow Silencers: 22 gauge.

E. Principal Sound-Absorbing Mechanism:

1. Dissipative silencers:

a. Models RED and EX-RED type with acoustic media. Media shall be of acoustic quality, shot-free glass fiber insulation with long, resilient fibers bonded with a thermosetting resin. Glass fiber density and compression shall be as required to insure conformance with laboratory test data. Glass fiber shall be packed with a minimum of 15% compression during silencer assembly. Media shall be resilient such that it will not crumble or break, and conform to irregular surfaces. Media shall not cause or accelerate corrosion of aluminum or steel. Mineral wool will not be permitted as a substitute for glass fiber.

F. Capacities and Characteristics:

1. See duct silencer performance schedule on mechanical drawings. Alternate manufacturer has to provide acoustical analysis to the Mechanical Consultant showing silencers meet the NC-35 in the classroom space.

PART 3 - EXECUTION

3.1 INSTALLATION

A. Install silencer according to manufacturer's written installation instructions.

3.2 FIELD QUALITY CONTROL

A. Tests and Inspections:

1. Ensure duct silencers are installed with airflow arrows in direction of airflow.

END OF SECTION

SECTION 23 8126

SPLIT-SYSTEM AIR-CONDITIONERS

PART 1 - GENERAL

1.1 SUMMARY

A. Section includes split-system air-conditioning and heat-pump units consisting of separate evaporator-fan and compressor-condenser components.

1.2 ACTION SUBMITTALS

A. Product Data: For each type of product indicated.

B. Shop Drawings: Include plans, elevations, sections, details, and attachments to other work.

1. Detail equipment assemblies and indicate dimensions, weights, loads, required clearances, method of field assembly, components, and location and size of each field connection.

1.3 INFORMATIONAL SUBMITTALS

A. Warranty: Sample of special warranty.

1.4 CLOSEOUT SUBMITTALS

A. Operation and maintenance data.

1.5 QUALITY ASSURANCE

A. Electrical Components, Devices, and Accessories: Listed and labeled as defined in NFPA 70, by a qualified testing agency, and marked for intended location and application.

B. ASHRAE Compliance:

1. Fabricate and label refrigeration system to comply with ASHRAE 15, "Safety Standard for Refrigeration Systems."

C. ASHRAE/IESNA Compliance: Applicable requirements in ASHRAE/IESNA 90.1-2007.

1.6 WARRANTY

A. Special Warranty: Manufacturer's standard form in which manufacturer agrees to repair or replace components of split-system air-conditioning units that fail in materials or workmanship within specified warranty period.

1. Warranty Period:

a. For Compressor: Five year(s) from date of Substantial Completion.

b. For Parts: Five year(s) from date of Substantial Completion.

c. For Labor: Five year(s) from date of Substantial Completion.

PART 2 - PRODUCTS

2.1 INDOOR UNITS (5 TONS **OR LESS)**

A. MANUFACTURERS
1. Basis-of-Design Product: Subject to compliance with requirements, provide product indicated on Drawings or comparable product by one of the following:
   a. Carrier Corporation; Home Comfort and HVAC Building & Industrial Systems.
   b. Lennox International Inc.
   c. Trane; a business of American Standard companies.
   d. Aaon
   e. York International Corp.; a division of Unitary Products Group.

B. Horizontal, Evaporator-Fan Components:

1. Cabinet: Enameled steel with removable panels on front and ends in color selected by Architect.

   a. Insulation: Faced, glass-fiber duct liner.

   b. Drain Pans: Galvanized steel, with connection for drain; insulated.

2. Refrigerant Coil: Copper tube, with mechanically bonded aluminum fins and thermal-expansion valve. Comply with ARI 210/240.
3. Electric Coil: Helical, nickel-chrome, resistance-wire heating elements; with refractory ceramic support bushings, automatic-reset thermal cutout, built-in magnetic contactors, manual-reset thermal cutout, airflow proving device, and one-time fuses in terminal box for overcurrent protection.
4. Fan: Direct drive, centrifugal.
5. Fan Motors:

   a. Comply with NEMA designation, temperature rating, service factor, enclosure type, and efficiency requirements specified in Section 23 0513 "Common Motor Requirements for HVAC Equipment."

   b. Multitapped, multispeed with internal thermal protection and permanent lubrication.

6. Air Filtration Section:

   a. General Requirements for Air Filtration Section:

      1) Comply with NFPA 90A.
      2) Minimum Arrestance: According to ASHRAE 52.1 and MERV according to ASHRAE 52.2.
      3) Filter-Holding Frames: Arranged for flat or angular orientation, with access doors on both sides of unit. Filters shall be removable from one side or lifted out from access plenum.

   b. Disposable Panel Filters:

      1) Factory-fabricated, viscous-coated, flat-panel type.
      2) Thickness: 1 inch.
      3) Merv according to ASHRAE 52.2: 7
      4) Media: Fibrous material formed into deep-V-shaped pleats and held by self-supporting wire grid.

5) Frame: Galvanized steel, with metal grid on outlet side, steel rod grid on inlet side, and hinged; with pull and retaining handles.

2.2 INDOOR WALL or CEILING MOUNTED (MINI-SPLIT) UNITS (5 TONS**OR LESS)**

A. MANUFACTURERS

1. Basis-of-Design Product: Subject to compliance with requirements, provide product indicated on Drawings by the following:
   a. LG.
   b. Sanyo
   c. Mitsubishi
   d. Panasonic
   e. Daikin
   f. Trane.

B. Wall-Mounted, Evaporator-Fan Components:

1. Cabinet: Enameled steel with removable panels on front and ends in color selected by Architect, and discharge drain pans with drain connection.
2. Refrigerant Coil: Copper tube, with mechanically bonded aluminum fins and thermal-expansion valve. Comply with ARI 210/240.
3. Fan: Direct drive, centrifugal.
4. Fan Motors:

   a. Comply with NEMA designation, temperature rating, service factor, enclosure type, and efficiency requirements specified in Section 23 0513 "Common Motor Requirements for HVAC Equipment."

   b. Multitapped, multispeed with internal thermal protection and permanent lubrication.

   c. NEMA Premium (TM) efficient motors as defined in NEMA MG 1.

   d. Controllers, Electrical Devices, and Wiring: Comply with requirements for electrical devices and connections specified in electrical Sections.

   e. Mount unit-mounted disconnect switches on interior of unit.

5. Airstream Surfaces: Surfaces in contact with the airstream shall comply with requirements in ASHRAE 62.1.

6. Condensate Drain Pans:

   a. Fabricated with one percent slope in at least two planes to collect condensate from cooling coils (including coil piping connections, coil headers, and return bends) and humidifiers, and to direct water toward drain connection.

   b. Single-wall, galvanized-steel sheet.

   c. Drain Connection: Located at lowest point of pan and sized to prevent overflow. Terminate with threaded nipple on one end of pan.

   d. Pan-Top Surface Coating: Asphaltic waterproofing compound.

7. Air Filtration Section:

a. General Requirements for Air Filtration Section:

1) Comply with NFPA 90A.
2) Minimum Arrestance: According to ASHRAE 52.1 and MERV according to ASHRAE 52.2.
3) Filter-Holding Frames: Arranged for flat or angular orientation, with access doors on both sides of unit. Filters shall be removable from one side or lifted out from access plenum.

2.3 OUTDOOR UNITS (5 TONS OR LESS)

A. Air-Cooled, Compressor-Condenser Components:

1. Casing: Steel, finished with baked enamel in color selected by Architect, with removable panels for access to controls, weep holes for water drainage, and mounting holes in base. Provide brass service valves, fittings, and gage ports on exterior of casing.
2. Compressor: Hermetically sealed with crankcase heater and mounted on vibration isolation device. Compressor motor shall have thermal- and current-sensitive overload devices, start capacitor, relay, and contactor.

a. Compressor Type: Scroll.

b. Refrigerant Charge: R-410A.

c. Refrigerant Coil: Copper tube, with mechanically bonded aluminum fins and liquid subcooler. Comply with ARI 210/240.

3. Fan: Aluminum-propeller type, directly connected to motor.
4. Motor: Permanently lubricated, with integral thermal-overload protection.
5. Low Ambient Kit: Permits operation down to 20 deg F
6. Mounting Base: Polyethylene.

2.4 ACCESSORIES

A. Thermostat: Low voltage with subbase to control compressor and evaporator fan.

B. Thermostat: Wireless infrared functioning to remotely control compressor and evaporator fan, with the following features:

1. Compressor time delay.
2. 24-hour time control of system stop and start.
3. Liquid-crystal display indicating temperature, set-point temperature, time setting, operating mode, and fan speed.
4. Fan-speed selection including auto setting.

C. Automatic-reset timer to prevent rapid cycling of compressor.

D. Refrigerant Line Kits: Soft-annealed copper suction and liquid lines factory cleaned, dried, pressurized, and sealed; factory-insulated suction line with flared fittings at both ends.

E. Drain Hose: For condensate.

PART 3 - EXECUTION

3.1 INSTALLATION

A. Install units level and plumb.

B. Install evaporator-fan components using manufacturer's standard mounting devices securely fastened to building structure.

C. Install ground-mounted, compressor-condenser components on 4-inch-hick, reinforced concrete base that is 4 inches larger, on each side, than unit. Concrete, reinforcement, and formwork are specified in Section 03 3000 "Cast-in-Place Concrete." Coordinate anchor installation with concrete base.

D. Install roof-mounted, compressor-condenser components on equipment supports specified in Section 07 7200 "Roof Accessories." Anchor units to supports with removable, cadmium-plated fasteners.

E. Install and connect precharged refrigerant tubing to component's quick-connect fittings. Install tubing to allow access to unit.

3.2 CONNECTIONS

A. Piping installation requirements are specified in other Sections. Drawings indicate general arrangement of piping, fittings, and specialties.

B. Where piping is installed adjacent to unit, allow space for service and maintenance of unit.

C. Duct Connections: Duct installation requirements are specified in Section 23 3113 "Metal Ducts." Drawings indicate the general arrangement of ducts. Connect supply and return ducts to split-system air-conditioning units with flexible duct connectors. Flexible duct connectors are specified in Section 23 3300 "Air Duct Accessories."

3.3 FIELD QUALITY CONTROL

A. Perform tests and inspections.

1. Manufacturer's Field Service: Engage a factory-authorized service representative to inspect components, assemblies, and equipment installations, including connections, and to assist in testing.

B. Tests and Inspections:

1. Leak Test: After installation, charge system and test for leaks. Repair leaks and retest until no leaks exist.
2. Operational Test: After electrical circuitry has been energized, start units to confirm proper motor rotation and unit operation.
3. Test and adjust controls and safeties. Replace damaged and malfunctioning controls and equipment.

C. Remove and replace malfunctioning units and retest as specified above.

D. Prepare test and inspection reports.

3.4 DEMONSTRATION

A. Train Owner's maintenance personnel to adjust, operate, and maintain units.

END OF SECTION

SECTION 23 8219

FAN COIL UNITS

PART 1 - GENERAL

1.1 RELATED DOCUMENTS

A. Drawings and general provisions of the Contract, including General and Supplementary Conditions and Division 01 Specification Sections, apply to this Section.

1.2 SUMMARY

A. This Section includes fan-coil units and accessories.

1.3 DEFINITIONS

A. BAS: Building automation system.

1.4 ACTION SUBMITTALS

A. Product Data: Include rated capacities, operating characteristics, furnished specialties, and accessories.

B. Shop Drawings: Detail equipment assemblies and indicate dimensions, weights, loads, required clearances, method of field assembly, components, and location and size of each field connection.

1. Wiring Diagrams: Power, signal, and control wiring.

1.5 INFORMATIONAL SUBMITTALS

A. Coordination Drawings: Floor plans, reflected ceiling plans, and other details, drawn to scale, on which the following items are shown and coordinated with each other, based on input from installers of the items involved:

1. Ceiling suspension components.
2. Structural members to which fan-coil units will be attached.
3. Method of attaching hangers to building structure.
4. Size and location of initial access modules for acoustical tile.
5. Items penetrating finished ceiling, including the following:

    a. Lighting fixtures.
    b. Air outlets and inlets.
    c. Speakers.
    d. Sprinklers.
    e. Access panels.

6. Perimeter moldings for exposed or partially exposed cabinets.

B. Field quality-control test reports.

C. Warranty: Special warranty specified in this Section.

1.6 CLOSEOUT SUBMITTALS

A. Operation and Maintenance Data: For fan-coil units to include in emergency, operation, and maintenance manuals. In addition to items specified in Section 01 7823 "Operation and Maintenance Data," include the following:

1. Maintenance schedules and repair part lists for motors, coils, integral controls, and filters.

1.7 MAINTENANCE MATERIAL SUBMITTALS

A. Furnish extra materials described below that match products installed and that are packaged with protective covering for storage and identified with labels describing contents.

1. Fan-Coil-Unit Filters: Furnish one spare filters for each filter installed.
2. Fan Belts: Furnish spare one fan belt for each unit installed.

1.8 QUALITY ASSURANCE

A. Electrical Components, Devices, and Accessories: Listed and labeled as defined in NFPA 70, Article 100, by a testing agency acceptable to authorities having jurisdiction, and marked for intended use.

B. ASHRAE Compliance: Applicable requirements in ASHRAE 62.1, Section 5 - "Systems and Equipment" and Section 7 - "Construction and Startup."

C. ASHRAE/IESNA 90.1 Compliance: Applicable requirements in ASHRAE/IESNA 90.1, Section 6 - "Heating, Ventilating, and Air-Conditioning."

1.9 COORDINATION

A. Coordinate layout and installation of fan-coil units and suspension system components with other construction that penetrates or is supported by ceilings, including light fixtures, HVAC equipment, fire-suppression-system components, and partition assemblies.

1.10 WARRANTY

A. Warranty Period: One year from date of Substantial Completion.

PART 2 - PRODUCTS

2.1 DUCTED FAN-COIL UNITS

A. Basis-of-Design Product: Provide product indicated on Drawings or a comparable product by one of the following:
   1. Carrier Corporation.
   2. Environmental Technologies, Inc.
   3. Trane.
   4. Titus.
   5. YORK International Corporation.

B. Description: Factory-packaged and -tested units rated according to ARI 440, ASHRAE 33, and UL 1995.

C. Coil Section Insulation: 1/2-inch thick coated glass fiber complying with ASTM C 1071 and attached with adhesive complying with ASTM C 916.

   1. Fire-Hazard Classification: Insulation and adhesive shall have a combined maximum flame-spread index of 25 and smoke-developed index of 50 when tested according to ASTM E 84.
   2. Airstream Surfaces: Surfaces in contact with the airstream shall comply with requirements in ASHRAE 62.1.

D. Drain Pans: Insulated galvanized steel. Fabricate pans and drain connections to comply with ASHRAE 62.1.

E. Chassis: Galvanized steel where exposed to moisture, with baked-enamel finish and removable access panels.

F. Cabinets: Steel with baked-enamel finish in manufacturer's standard paint color.
   1. Return-Air Plenum on Vertical units: Sheet metal plenum finished to match the chassis.
   2. Mixing Plenum: Sheet metal plenum finished and insulated to match the chassis with outdoor- and return-air, formed-steel dampers.
   3. Dampers: Galvanized steel with extruded-vinyl blade seals, flexible-metal jamb seals, and interlocking linkage.

G. Filters: Minimum arrestance according to ASHRAE 52.1, and a minimum efficiency reporting value (MERV) according to ASHRAE 52.2.

   1. Pleated Cotton-Polyester Media: 90 percent arrestance and 7 MERV.

H. Hydronic Coils: Copper tube, with mechanically bonded aluminum fins spaced no closer than 0.1 inch, rated for a minimum working pressure of 200 psig and a maximum entering-water temperature of 220 deg F. Include manual air vent and drain.

I. Direct-Driven Fans: Double width, forward curved, centrifugal; with permanently lubricated, multispeed motor resiliently mounted in the fan inlet. Aluminum or painted-steel wheels, and painted-steel or galvanized-steel fan scrolls.

J. Belt-Driven Fans: Double width, forward curved, centrifugal; with permanently lubricated, single-speed motor installed on an adjustable fan base resiliently mounted in the cabinet. Aluminum or painted-steel wheels, and painted-steel or galvanized-steel fan scrolls.

1. Motors: Comply with requirements in Section 23 0513 "Common Motor Requirements for HVAC Equipment."

K. Control devices and operational sequence are specified in Section 23 0548 "Vibration and Seismic Controls for HVAC Piping and Equipment."

L. Electrical Connection: Factory wire motors and controls for a single electrical connection.

PART 3 - EXECUTION

3.1 EXAMINATION

A. Examine areas to receive fan-coil units for compliance with requirements for installation tolerances and other conditions affecting performance.

B. Examine roughing-in for piping and electrical connections to verify actual locations before fan-coil-unit installation.

C. Proceed with installation only after unsatisfactory conditions have been corrected.

3.2 INSTALLATION

A. Install fan-coil units level and plumb.

B. Install fan-coil units to comply with NFPA 90A.

C. Suspend fan-coil units from structure with elastomeric hangers. Vibration isolators are specified in Section 23 0548 "Vibration and Seismic Controls for HVAC Piping and Equipment."

D. Verify locations of thermostats, humidistats, and other exposed control sensors with Drawings and room details before installation.

E. Install new filters in each fan-coil unit within two weeks after Substantial Completion.

3.3 CONNECTIONS

A. Piping installation requirements are specified in other Sections. Drawings indicate general arrangement of piping, fittings, and specialties. Specific connection requirements are as follows:

1. Install piping adjacent to machine to allow service and maintenance.
2. Connect piping to fan-coil-unit factory hydronic piping package. Install piping package if shipped loose.
3. Connect condensate drain to indirect waste.

    a. Install condensate trap of adequate depth to seal against the pressure of fan. Install cleanouts in piping at changes of direction.

B. Connect supply and return ducts to fan-coil units with flexible duct connectors specified in Section 23 3300 "Air Duct Accessories." Comply with safety requirements in UL 1995 for duct connections.

C. Ground equipment according to Section 26 0526 "Grounding and Bonding for Electrical Systems."

D. Connect wiring according to Section 26 0519 "Low-Voltage Electrical Power Conductors and Cables."

3.4 FIELD QUALITY CONTROL

A. Perform the following field tests and inspections and prepare test reports:

1. Operational Test: After electrical circuitry has been energized, start units to confirm proper motor rotation and unit operation.
2. Test and adjust controls and safety devices. Replace damaged and malfunctioning controls and equipment.

B. Remove and replace malfunctioning units and retest as specified above.

3.5 ADJUSTING

A. Adjust initial temperature and humidity set points.

3.6 DEMONSTRATION

A. Engage a factory-authorized service representative to train Owner's maintenance personnel to adjust, operate, and maintain fan-coil units. Refer to Section 01 7900 "Demonstration and Training."

END OF SECTION

SECTION 23 8233

ELECTRIC CONVECTORS

PART 1 - GENERAL

1.1 RELATED DOCUMENTS

A. Drawings and general provisions of the Contract, including General and Supplementary Conditions and other Division 01 Specification Sections, apply to this Section.

1.2 SUMMARY

A. Section includes electric convectors.

1.3 ACTION SUBMITTALS

A. Product Data: For each type of product.

1. Include rated capacities, operating characteristics, furnished specialties, and accessories.

B. Shop Drawings:

1. Include plans, elevations, sections, and details.
2. Include details of equipment assemblies. Indicate dimensions, weights, loads, required clearances, method of field assembly, components, and location and size of each field connection.
3. Include details and dimensions of custom-fabricated enclosures.
4. Indicate location and size of each field connection.
5. Indicate location and arrangement of piping valves and specialties.
6. Indicate location and arrangement of integral controls.
7. Include enclosure joints, corner pieces, access doors, and other accessories.
8. Include diagrams for power, signal, and control wiring.

C. Samples: For each exposed product and for each color and texture specified.

D. Color Samples for Initial Selection: For units with factory-applied color finishes.

E. Color Samples for Verification: For each type of exposed finish.

1.4 INFORMATIONAL SUBMITTALS

A. Coordination Drawings: Floor plans and other details, drawn to scale, on which the following items are shown and coordinated with each other, using input from installers of the items involved:

1. Structural members, including wall construction, to which convectors will be attached.
2. Method of attaching convectors to building structure.
3. Penetrations of fire-rated wall and floor assemblies.

B. Field quality-control reports.

PART 2 - PRODUCTS

2.1 ELECTRIC CONVECTORS

A. Manufacturers: Subject to compliance with requirements, provide products by one of the following:

1. Berko; Marley Engineered Products.
2. INDEECO.
3. Markel Products; TPI Corporation.
4. QMark; Marley Engineered Products.

B. Description: Factory-packaged units constructed according to UL 499, UL 1030, and UL 2021.

1. Electrical Components, Devices, and Accessories: Listed and labeled as defined in NFPA 70, by a qualified testing agency, and marked for intended location and application.

C. Heating Elements: Nickel-chromium-wire heating element enclosed in metallic sheath mechanically bonded to fins, with high-temperature cutout and sensor running the full length of element. Element supports shall eliminate thermal expansion noise.

D. Front and Top Panel: Minimum 0.0677-inch- thick steel with exposed corners rounded; removable front panels with tamper-resistant fasteners braced and reinforced for stiffness.

E. Wall-Mounted Back and End Panels: Minimum 0.0428-inch-thick steel.

F. Floor-Mounted Pedestals: Conceal conduit for power and control wiring at maximum 36-inch spacing. Pedestal-mounted back panel shall be solid panel matching front panel.

G. Support Brackets: Locate at maximum 36-inch spacing to support front panel and element.

H. Insulation: 1/2-inch-thick, fibrous glass on inside of the back of the enclosure.

I. Finish: Baked-enamel finish in manufacturer's custom color as selected by Architect.

J. Damper: Knob-operated internal damper.

K. Access Doors: Factory made, permanently hinged with tamper-resistant fastener, minimum size 6 by 7 inches, integral with enclosure.

L. Enclosure Style: Sloped top.

1. Front Inlet Grille: Punched louver; painted to match enclosure.
2. Front Inlet Grille: Extruded-aluminum linear bar grille; pencil-proof bar spacing.

    a. Mill-finish aluminum.
    b. Anodized finish, color as selected by Architect from manufacturer's custom colors.
    c. Painted to match enclosure.

3. Top Outlet Grille: Punched louver; painted to match enclosure.

4. Top Outlet Grille: Extruded-aluminum linear bar grille; pencil-proof bar spacing.

    a. Mill-finish aluminum.
    b. Anodized finish, color as selected by Architect from manufacturer's custom colors.
    c. Painted to match enclosure.

M. Unit Controls: Integral low-voltage relay and control transformer for remote thermostat.

N. Accessories: Integral disconnect switch, recessing flanges finished to match enclosure or overlapping front cover for fully recessed units, and rubber gaskets to seal cabinet at wall.

2.2 HOT-WATER CONVECTORS

A. Manufacturers: Subject to compliance with requirements, provide products by one of the following:

1. Sterling HVAC Products; a Mestek company.
2. Trane.

B. Heating Elements: Seamless copper tubing mechanically expanded into evenly spaced aluminum fins and rolled into cast- brass headers with inlet/outlet and air vent; steel side plates and supports. Factory-pressure-test element at minimum 100 psig.
1. Entering-Air Temperature: 65 deg F.

C. Front and Top Panel: Minimum 0.0677-inch- thick steel with exposed corners rounded; removable front panels with tamper-resistant fasteners braced and reinforced for stiffness.

D. Wall-Mounted Back and End Panels: Minimum 0.0428-inch-thick steel.

E. Floor-Mounted Pedestals: Conceal conduit for power and control wiring at maximum 36-inch spacing. Pedestal-mounted back panel shall be solid panel matching front panel.

F. Support Brackets: Locate at maximum 36-inch spacing to support front panel and element.

G. Insulation: 1/2-inch-thick, fibrous glass on inside of the back of the enclosure.

H. Finish: Baked-enamel finish in manufacturer's custom color as selected by Architect.

I. Damper: Knob-operated internal damper.

J. Access Doors: Factory made, permanently hinged with tamper-resistant fastener, minimum size 6 by 7 inches, integral with enclosure.

K. Enclosure Style: Sloped top.

1. Front Inlet Grille: Punched louver; painted to match enclosure.
2. Front Inlet Grille: Extruded-aluminum linear bar grille; pencil-proof bar spacing.

    a. Mill-finish aluminum.
    b. Anodized finish, color as selected by Architect from manufacturer's custom colors.
    c. Painted to match enclosure.

3. Top Outlet Grille: Punched louver; painted to match enclosure.
4. Top Outlet Grille: Extruded-aluminum linear bar grille; pencil-proof bar spacing.

a. Mill-finish aluminum.
b. Anodized finish, color as selected by Architect from manufacturer's custom colors.
c. Painted to match enclosure.

PART 3 - EXECUTION

3.1 EXAMINATION

A. Examine areas to receive convectors for compliance with requirements for installation tolerances and other conditions affecting performance of the Work.

B. Examine roughing-in for hydronic-piping electrical connections to verify actual locations before installation of convector.

C. Proceed with installation only after unsatisfactory conditions have been corrected.

3.2 INSTALLATION

A. Install convectors level and plumb.

B. Install valves within reach of access door provided in enclosure.

C. Install air-seal gasket between wall and recessed flanges or front cover of fully recessed unit.

D. Install piping within pedestals for freestanding units.

3.3 CONNECTIONS

A. Piping installation requirements are specified in Section 23 2113 "Hydronic Piping" and Section 23 2116 "Hydronic Piping Specialties." Drawings indicate general arrangement of piping, fittings, and specialties.

B. Connect hot-water convectors and components to piping according to Section 23 2113 "Hydronic Piping" and Section 23 2116 "Hydronic Piping Specialties."

1. Install shutoff valves on inlet and outlet, and balancing valve on outlet.

C. Connect steam convectors and components to piping according to Section 23 2213 "Steam and Condensate Heating Piping" and Section 23 2216 "Steam and Condensate Heating Piping Specialties."

1. Install shutoff valve on inlet; install strainer, steam trap, and shutoff valve on outlet.

D. Install control valves as required by Section 23 0923.11 "Control Valves."

E. Install piping adjacent to convectors to allow service and maintenance.

F. Ground electric convectors according to Section 26 0526 "Grounding and Bonding for Electrical Systems."

G. Connect wiring according to Section 26 0519 "Low-Voltage Electrical Power Conductors and Cables."

3.4 FIELD QUALITY CONTROL

A. Perform the following field tests and inspections:

1. Leak Test: After installation, charge system and test for leaks. Repair leaks and retest until no leaks exist.
2. Operational Test: After electrical circuitry has been energized, start convectors to confirm proper operation.
3. Test and adjust controls and safeties. Replace damaged and malfunctioning controls and equipment.

B. Convectors will be considered defective if they do not pass tests and inspections.

C. Prepare test and inspection reports.

END OF SECTION

CSI MASTER FORMAT 2012 GUIDE SPECIFICATION FOR HWAT

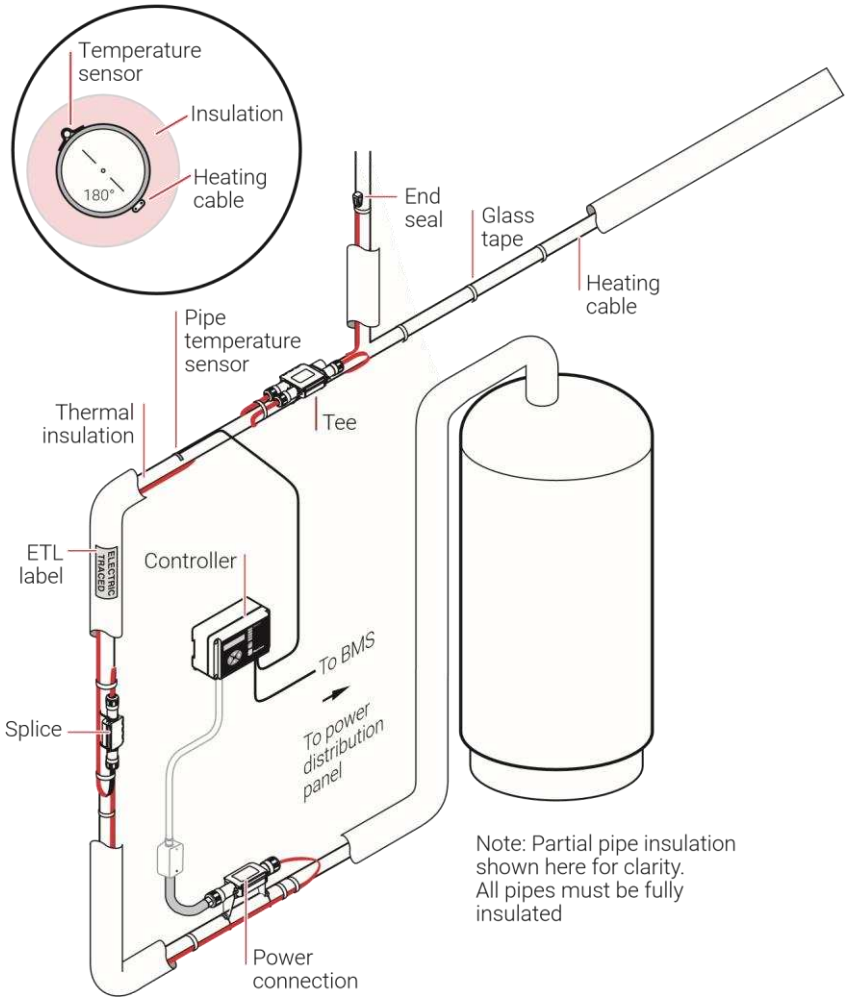

System for temperature maintenance of domestic hot water supply systems with energy efficient time based control and BMS communication capabilities.

SCOPE

This specification describes an energy efficient system for temperature maintenance of domestic hot water supply systems without the need for recirculation designs.

This page gives a general overview of the system and the CSI formatted specification begins on page four (4).

SYSTEM DESCRIPTION

The HWAT system complies with local energy codes, including California Title 24, due to a time based control methodology and an energy efficient thermal insulation schedule.

Self-Regulating Heating Cable nVent RAYCHEM HWAT self-regulating heating cable (HWAT-R2) with plasticizer diffusion shield, heavy tinned copper braid and polyolefin outer jacket. The heating cable shall be part of a UL Listed, CSA Certified and FM Approved system.

CSI MASTER FORMAT 2012 GUIDE SPECIFICATION FOR HWAT

System Connection Kits

RAYCHEM RayClic connection kits for power connections, tees/splices and end seals.

Controller

Single Circuit Control **Distributed Group Control**

RAYCHEM HWAT-ECO digital controller with: RAYCHEM ACS-30 Multi-circuit digital control system with:

- Flexible temperature control from 105 – 140°F • Pre-programmed application based heattracing controller
- Three programmable temperature set points for maximum • Touch-screen user interface (ACS-UIT2) communicates with up energy efficiency: to 52 ACS-PCM2-5 modular control panels.The RAYCHEM C910-
  - Maintain 485 controller may be used in the ACS-30 system for single circuit extensions
  - Economy

• BMS interface

- Off
  - Controls up to 260 heat-tracing circuits with up to 388
  - Heat cycle setting temperature inputs (RTDs)
  - 24/7 time based control • Proportional Ambient Sensing Control (PASC).
  - Nine pre-defined temperature • 30 A switching capacity rating setpoint programs
  - Enclosure
  - BMS interface
- ACS-UIT2: NEMA 4
- Pipe temperature sensor

– ACS-PCM2-5: NEMA 4/12

- Master/slave function
- 24 A switching capacity rating
- NEMA 12 enclosure **Device Server**

RAYCHEM ProtoNode: A multi-protocol device server to interface the ACS-30 with a building management system (BMS).

Thermal Pipe Insulation

Flame retardant insulation (closed-cell or fiberglass) with waterproof covering is required following nVent insulation schedule as detailed in the HWAT Product Selection and Design Guide.

SYSTEM DESCRIPTION

Designer Notes

1. For proper cable selection refer to the HWAT product selection and design guide.
2. External 30-mA ground-fault circuit protection is required when using the HWAT-ECO. Ground-fault circuit protection (adjustable) is integrated in the ACS-30 controller and does not need to be provided separately.
3. No temperature sensors are required for pipe temperature control. Temperature sensors can be used to monitor the water heater or mixing valve output. With ACS-30, additional temperature sensors can be used to monitor the overall performance of the system.
4. The HWAT-ECO may be connected to the BMS using two conductor twisted pair shielded RS-485 cable (PTM Catalog Number: MONI-RS485-WIRE). The installation of the communication wiring is included in specification section 25 50 00.
5. The ACS-30 may be connected to the BMS through the ProtoNode using two conductor twisted pair shielded RS-485 cable (PTM Catalog Number: MONI-RS485-WIRE). The ProtoNode is connected to the BMS by Ethernet or RS-485. The installation of the communication wiring is included in specification section 25 50 00.
6. The HWAT-ECO is a wall mounted controller with a NEMA 12 rated enclosure for indoor installation.
7. ACS-UIT2 should be centrally located in the building connected to the remote ACS-PCM2-5 control panels using RS-485 cable. The ACS-PCM2-5 control panels may be located indoors or outdoors throughout the installation.
8. The location of the controller, power connection, tees/splices and end seals must be shown on the drawings.

Drawing Details

Installation details can be found at CADdetails.com under Hot Water Temperature Maintenance (HWAT) folder.

SECTION 22 5214

HEAT TRACING FOR PLUMBING PIPING

PART 1 – GENERAL

1.01 SUMMARY

A. This Section includes a UL Listed, CSA Certified and FM Approved heat tracing system for temperature maintenance of domestic hot water supply systems consisting of self-regulating heating cable, connection kits and energy efficient time based control.

B. The system complies with California Title 24 energy requirements.

1.02 RELATED SECTIONS

A. Section 22 0533 – Heat Tracing for Plumbing Piping

B. Section 22 0719 – Plumbing Piping Insulation

C. Section 25 3400 – Integrated Automation Instrumentation and Terminal Devices for Plumbing

D. Section 25 5400 – Integrated Automation Control of Plumbing

1.03 SYSTEM DESCRIPTION [Select one]

A. [Select for HWAT-ECO] System for temperature maintenance of domestic hot water supply systems with energy efficient time based control, monitoring, and Building Management System (BMS) communication capabilities.

B. [Select for ACS-30] System for temperature maintenance of domestic hot water supply systems with energy efficient time based control, multi-point monitoring, integrated ground-fault circuit protection and Building Management System (BMS) communication capabilities.

1.04 SUBMITTALS

A. Product Data

1. Heating cable data sheet
2. UL, CSA, FM approval certificates for hot water temperature maintenance systems
3. Hot water temperature maintenance design guide
4. System installation and operation manual
5. System installation details
6. Connection kits and accessories data sheet
7. Controller data sheet
8. Controller wiring diagram

1.05 QUALITY ASSURANCE

A. Manufacturers' Qualifications

1. Manufacturer to show minimum of thirty (30) years experience in manufacturing electric self-regulating heating cables.
2. Manufacturer will be ISO-9001 registered.
3. Manufacturer to provide products consistent with IEEE 515.1 and CSA 22.2 No 130-03 requirements.

B. Installer Qualifications

1. System installer shall have complete understanding of product and product literature from manufacturer or authorized representative prior to installation. Electrical connections shall be performed by a licensed electrician.

C. Regulatory Requirements and Approvals

1. The system (heating cable, connection kits, and controller) shall be UL Listed, CSA Certified and FM Approved for hot water temperature maintenance.

D. Electrical Components, Devices, and Accessories: Listed and labelled as defined in NFPA 70, Article 100, by a Nationally Recognized Testing Laboratory (NRTL), and marked for intended use.

1.06 DELIVERY, STORAGE AND HANDLING

A. General Requirements: Deliver, store and handle products to prevent their deterioration or damage due to moisture, temperature changes, contaminates or other causes.

B. Delivery and Acceptance Requirements: Deliver products to site in original, unopened containers or packages with intact and legible manufacturers' labels identifying the following:

1. Product and Manufacturer
2. Length/Quantity
3. Lot Number
4. Installation and Operation Manual
5. MSDS (if applicable)

C. Storage and Handling Requirements

1. Store the heating cable in a clean, dry location with a temperature range 0°F (–18°C) to 140°F (60°C).
2. Protect the heating cable from mechanical damage.

1.07 WARRANTY

A. Extended Warranty

1. Manufacturer shall offer a ten (10) year warranty for all heating cables and components. Provide one (1) year warranty for all heat trace controllers.
2. Contractor shall submit to owner results of installation tests required by the manufacturer.

PART 2 – PRODUCTS

2.01 MANUFACTURERS AND PRODUCTS

A. Contract Documents are based on manufacturer and products named below to establish a standard of quality.

B. Basis of Design

1. Basis of Design Product Selections

a. Manufacturer

1. Manufacturers shall have more than thirty (30) years' experience with manufacture & installation self-regulating heating cables.
2. Manufacturer shall provide UL, CSA, FM approval certificates for hot water temperature maintenance system
3. Manufacturer shall be nVent, LLC, located at, 7433 Harwin Drive, Houston, TX 77036 Tel: (800) 545-6258, nVent.com.

b. Hot Water Temperature Maintenance System

1. RAYCHEM HWAT self-regulating heating cables with plasticizer diffusion shield, heavy tinned copper braid and polyolefin outer jacket.
2. RAYCHEM RayClic and accessories.

3. RAYCHEM HWAT-ECO or RAYCHEM ACS-30 **[Select one]** digital controller.
4. RAYCHEM ProtoNode multi-protocol device server.
5. The HWAT system complies with local energy codes, including California Title 24, due to a time based control methodology (HWAT-ECO or ACS-30 **[Select one]**) and an energy efficient thermal insulation schedule.

2.02 PRODUCTS, GENERAL

A. Single Source Responsibility: Furnish heat tracing system for the temperature maintenance of domestic hot water supply systems from a single manufacturer.
B. The system (heating cable, connection kits, and controller) shall be UL Listed, CSA Certified and FM Approved for hot water temperature maintenance. No parts of the system may be substituted or exchanged.

2.03 PRODUCTS

A. Self-Regulating Heating Cable
1. Heating cable shall be RAYCHEM HWAT self-regulating heating cable manufactured by nVent. a. Model Numbers: HWAT-R2
2. The heating cable shall consist of a continuous core of conductive polymer that is radiation crosslinked, extruded between two (2) 16 AWG nickel-plated copper bus wires that varies its power output in response to pipe temperature changes.
3. The heating cable shall have a modified polyolefin inner jacket for dielectric integrity.
4. The heating cable shall have a plasticizer diffusion shield.
5. The heating cable shall have a thicker gauge (5/24) tinned copper braid for ground path and mechanical ruggedness.
6. The heating cable shall have a color coded polyolefin outer jacket.
7. The heating cable shall have a self-regulating factor of at least 70 percent for HWAT-R2. The self-regulating factor is defined as the percent reduction of the heating cable power output going from a 40°F pipe temperature to 150°F pipe temperature.
8. The heating cable shall operate on line voltages of 208, 220, 240 or 277 volts without the use of transformers. **[Select one]**
9. The heating cable shall be UL part of a UL Listed, CSA Certified and FM Approved system.
10. The outer jacket of the heating cable shall have the following markings:
   a. Heating cable model number
   b. Agency listings
   c. Meter mark
   d. Lot/Batch ID

B. Heating Cable Connection Kits
1. Heating cable connection kits shall be RAYCHEM RayClic connection kits.
2. Manufacturer shall provide power connection, splice/tee and end seal kits compatible with selected heating cable.
3. Installation shall not require the installing contractor to cut into the heating-cable core to expose the bus wires.
4. Connection kits shall be rated NEMA 4X to prevent water ingress and corrosion. All components shall be UV stabilized.
5. Connection kits shall be UL Listed and CSA Certified.

C. Heating Cable Installation Accessories
1. High temperature, glass filament tape for attachment of heating cable to fire sprinkler piping. Cable ties are not permitted. (PTM Catalog Number: GT-66)

2. Plastic Piping – provide an aluminium self-adhesive tape over the heating cable on all plastic piping if required. (PTM Catalog Number: AT-180)
3. Labels – Provide warning labels every 10 feet on exterior of insulation, opposite sides of pipe. (PTM Catalog Number: ETL)

D. Energy Efficient Time Based Control **[Select one option]**

1. [Option 1] Single Circuit Local Digital Controller

a. Local digital controller shall be the RAYCHEM HWAT-ECO.
b. Digital controller shall operate on 208 – 240 V.
c. Pre-programmed duty cycles based on ambient temperature ranging from 60 – 80°F.
d. The pre-programmed duty cycles shall be based on RAYCHEM HWAT heating cables only. No other heating cables may be used with the HWAT-ECO controller.
e. Flexible temperature control from 105 – 140°F.
f. Three programmable temperature set points for maximum energy efficiency.
1. Maintain
2. Economy
3. Off
g. Controller shall have heat cycle setting.
h. Heating cable manufacturer shall provide a local digital controller with 24/7 pre-programmed time based profiles specific to the selected heating cable application such as schools, hospitals and prisons.
i. Controller shall have remote temperature setting through 0 – 10 Vdc BMS interface.
j. Controller shall have a pipe temperature sensor, low/high pipe temperatures alarms and high temperature cut-out.
1. To maximize the energy efficiency of the HWAT system by verifying that the hot pipe temperature is at the correct temperature (low temperature alarm).
2. To monitor and alarm if the pipe temperature is hotter than intended (high temperature alarm and cut-out)
k. Multiple HWAT-ECO controllers can be networked together (master/slave association):
1. Allows BMS to interface with a master HWAT-ECO to control cloned circuits
2. Minimizes the number of HWAT-ECO controllers that must be individually programmed
l. Controller shall have 24 A switching capacity rating.
m. Enclosure type shall be NEMA 12 (ABS).
n. Controller shall have NO/NC alarm contacts. Controller shall alarm on:
1. Loss of power
2. Controller reinitialized
3. Internal controller temperature too high
4. Pipe temperature too high
5. Pipe temperature too low
6. Master/slave error
o. Digital controller shall have c-UL-us approvals specifically for use with the HWAT-R2 heating cable.

2. [Option 2] Multiple Circuit Distributed Digital Control System

a. Distributed digital control system shall be RAYCHEM ACS-30 heat-trace control system.

b. Heating cable manufacturer shall provide a distributed digital control system with preprogrammed parameters to provide concurrent control for heating cables used for pipe freeze protection, flow maintenance, hot water temperature maintenance, surface snow melting, roof and gutter de-icing, freezer frost heave prevention and floor heating applications.
c. All programming shall be done through the central User Interface Terminal (ACS-UIT2).
d. The ACS-UIT2 shall be a color LCD touch-screen display with password protection to prevent unauthorized access to the system.
e. The ACS-UIT2 shall communicate with up to fifty-two (52) ACS Power Control Panels (ACSPCM2-5) where each panel can control up to five (5) circuits and accept up to five (5) temperature inputs. C910-485 controllers may also be added to the ACS-30 system for single circuit extensions.
f. Digital control system shall be capable of assigning up to four (4) RTD temperature inputs per heat-tracing circuit.
g. The ACS-UIT2 shall communicate with up to sixteen (16) Remote Monitoring Modules (RMM2), where each module can accept up to 8 temperature inputs.
h. The ACS-UIT2 shall have a USB port to allow for quick and easy software update.
i. The ACS-UIT2 shall have three (3) programmable alarm contacts including an alarm light on the enclosure cover.
j. A separate offline software tool shall be made available to allow users to pre-program the digital control system and transfer program via a USB drive or Ethernet.
k. The ACS-UIT2 enclosure shall be NEMA 4 for indoor or outdoor locations.
l. The ACS-PCM2-5 panel shall be in a NEMA 4/12 enclosure approved for nonhazardous indoor and outdoor locations.
m. The ACS-PCM2-5 panel shall provide ground-fault and line current sensing, alarming, switching and temperature inputs for five (5) heat tracing circuits.
n. Each ACS-PCM2-5 panel shall have five (5) 3-pole, 30 A contactors (EMR type).
o. The ACS-PCM2-5 panel shall be capable of operating at 120 V to 277 V.
p. The ACS-PCM2-5 shall have an alarm contact including an alarm light on the panel cover.
q. Digital controller shall have an integrated adjustable GFPD (10 – 200 mA).
r. Digital control system can be configured for On/Off, ambient sensing, PASC and timed duty cycle control (HWAT only) modes based on the application. PASC control proportionally energizes the power to the heating cable to minimize energy based on ambient sensed conditions.
s. Upon communication loss with the user interface terminal (ACS-UIT2) the ACS-PCM2-5 panels shall control with the last downloaded set point.
t. In HWAT control mode, the ACS-30 shall have time based control algorithm with three programmable temperature setpoints for maximum energy efficiency (Maintain, Economy and Off)
u. In HWAT control mode, the pre-programmed duty cycles shall be based on RAYCHEM HWAT heating cables only. No other heating cables may be used in the HWAT control mode.
v. Digital control system will have a built-in self-test feature to verify proper functionality of heating cable system.
w. Digital control system will also be able to communicate with BMS by one of the following protocols using the RAYCHEM ProtoNode multi-protocol gateway. **[Select one]**

1. Modbus®

2. LonWorks® **[Select ProtoNode-LER]** 3. BACnet® **[Select ProtoNode-RER]** 4. Metasys® N2 **[Select ProtoNode-RER]**

x. The following variables will be monitored by the digital controller and reported back to the BMS. 1. Temperature
2. Ground-fault
3. Current draw
4. Power consumption
5. Associated alarms

y. The ACS-UIT2 shall be c-CSA-us Certified. The ACS-PCM2-5 panel shall be c-UL-us Listed.

E. Thermal Pipe Insulation

1. Pipes must be thermally insulated in accordance with the HWAT Design Guide requirements.
2. Thermal insulation must be a type that is flame retardant (closed-cell or fiberglass) with waterproof covering.

2.04 SYSTEM LISTING

A. The system (heating cable, connection kits, and controller) shall be UL Listed, CSA Certified and FM Approved for hot water temperature maintenance.
B. The temperature maintenance system shall have a design, installation and operating manual specific to domestic hot water piping.

PART 3 - EXECUTION

3.01 INSTALLERS

A. Acceptable Installers

1. Subject to compliance with requirements of Contract Documents, installer shall be familiar with installing heat-trace cable and equipment.

3.02 INSTALLATION

A. Comply with manufacturer's recommendations in the HWAT System Installation and Operation Manual.
B. Apply the heating cable linearly on the pipe after piping has successfully completed any pressure tests. Secure the heating cable to piping with fiberglass tape.
C. Install electric heating cable according to the drawings and the manufacturer's instructions. The installer shall be responsible for providing a complete functional system, installed in accordance with applicable national and local requirements.
D. Grounding of controller shall be equipment according to Section 26 0526 "Grounding and Bonding for Electrical Systems." E. Connection of all electrical wiring shall be according to Section 26 0519 "Low-Voltage Electrical Power Conductors and Cables."

F. Pipes must be thermally insulated in accordance with the HWAT design guide requirements.

3.03 FIELD QUALITY CONTROL

A. Initial start-up and field testing (commissioning) of the system shall be performed by factory technician or factory representative per the owner's requirements.
B. Field Testing and Inspections
1. The system shall be commissioned in accordance to the HWAT Installation and Operation manual.

2. The heating cable circuit integrity shall be tested using a 2500 Vdc megohmmeter at the following intervals; a. Before installing the heating cable
   b. After heating cable has been installed onto the pipe
   c. After installing connection kits
   d. After the thermal insulation is installed onto the pipe
   e. Prior to initial start-up (commissioning)
   f. As part of the regular system maintenance
   g. Minimum acceptable insulation resistance shall be 1000 megohms or greater
3. The technician shall verify the insulation schedule is in compliance with the HWAT Installation and Operation manual.
4. The technician shall verify that the HWAT-ECO **OR** ACS-30 **[Select one]** control parameters are set to the application requirements.
5. The technician shall verify that the HWAT-ECO **OR** ACS-30 **[Select one]** alarm contacts are corrected connected to the BMS.
6. The technician shall verify that the ACS-30 and ProtoNode-RER/-LER **[Select one]** are configured correctly with the BMS.
7. All commissioning results will be recorded and presented to the owner.

3.04 MAINTENANCE

A. Maintenance Service

1. Comply with manufacturer's recommendations in HWAT System Installation and Operation Manual.

END OF SECTION

SECTION 25 5050

DIRECT DIGITAL CONTROLS SYSTEM

PART 1 GENERAL

1.1 SECTION INCLUDES

A. Building Management System (BMS), utilizing direct digital controls.

1.2 RELATED WORK SPECIFIED ELSEWHERE

A. Products Installed But Not Supplied Under This Section:
   1. Thermostats with standalone units.

B. Products Not Furnished or Installed But Integrated with the Work of This Section:
   1. Smoke detectors (through alarm relay contacts).

C. Work Required Under Other Divisions Related to This Section:
   1. Power wiring to line side of motor starters, disconnects or variable frequency drives.
   2. Provision and wiring of smoke detectors and other devices relating to fire alarm system.
   3. Campus LAN (Ethernet) connection adjacent to JACE network management controller.
   4. Electrical submeters provided and installed by Electrical Contractor. Submeters to be provided with BACnet ms/tp communication.
   5. Solar Panel System and associated power meters
   6. Television display of Solar Panel System savings. Controls contractor to provide custom graphic appropriate for public display of Solar Panel system power data.

1.3 RELATED SECTIONS

A. Section 230500 - Common Work Results for HVAC.

1.4 SYSTEM DESCRIPTION

A. Scope: Furnish all labor, materials and equipment necessary for a complete and operating Building Management System (BMS), utilizing Direct Digital Controls as shown on the drawings and as described herein. Drawings are diagrammatic only. All controllers furnished in this section shall communicate on a peer-to-peer BACnet protocol bus.
   1. System architecture shall fully support a multi-vendor environment and be able to integrate third party systems via protocols including, as a minimum, LonTalk, BACnet and MODBUS.
   2. System architecture shall provide secure Web access using any of the current versions of Microsoft Internet Explorer, Mozilla Firefox, or Google Chrome browsers from any computer on the owner's LAN.
   3. Any control vendor that shall provide additional BMS server software shall be unacceptable.
   4. The BMS server or Master Controller shall host all graphic files for the control system.
   5. Provide all hardware, software, programming tools and documentation necessary to modify the system, accommodate system expansion, and facilitate changes in operation on site. Modification includes addition and deletion of devices, circuits, and

changes to system operation and custom label changes for devices and circuits. The system structure and software shall place no limit on the type or extent of software modifications on-site.

6. Owner shall receive all Administrator level login and passwords for engineering toolset at first training session. The Owner shall have full licensing and full access rights for all network management, operating system server, engineering and programming software required for the ongoing maintenance and operation of the BMS.
7. All JACE hardware licenses and certificates shall be stored on local MicroSD memory card employing encrypted "safe boot" technology.

B. All products of the BMS shall be provided with the following agency approvals. Verification that the approvals exist for all submitted products shall be provided on request, with the submittal package. Systems or products not currently offering the following approvals are not acceptable.

1. Federal Communications Commission (FCC), Rules and Regulations, Volume II -July 1986 Part 15 Class A Radio Frequency Devices.
2. FCC, Part 15, Subpart B, Class B
3. FCC, Part 15, Subpart C
4. FCC, Part 15, Subpart J, Class A Computing Devices.
5. UL 504 - Industrial Control Equipment.
6. UL 506 - Specialty Transformers.
7. UL 910 - Test Method for Fire and Smoke Characteristics of Electrical and Optical-Fiber Cables Used in Air-Handling Spaces.
8. UL 916 - Energy Management Systems All.
9. UL 1449 - Transient Voltage Suppression.
10. Standard Test for Flame Propagation Height of Electrical and Optical - Fiber Cables Installed Vertically in Shafts.
11. EIA/ANSI 232-E - Interface Between Data Technical Equipment and Data Circuit Terminal Equipment Employing Serial Binary Data Interchange.
12. EIA 455 - Standard Test Procedures for Fiber Optic Fibers, Cables, Transducers, Connecting and Terminating Devices.
13. IEEE C62.41- Surge Voltages in Low-Voltage AC Power Circuits.
14. IEEE 142 - Recommended Practice for Grounding of Industrial and Commercial Power Systems.
    a. NEMA 250 - Enclosures for Electrical Equipment.
15. NEMA ICS 1 - Industrial Controls and Systems.
16. NEMA ST 1 - Specialty Transformers.
17. NCSBC Compliance, Energy: Performance of control system shall meet or surpass the requirements of ASHRAE/IESNA 90.1-1999.
18. CE 61326.
19. C-Tick.
20. cUL.

1.5 SPECIFICATION NOMENCLATURE

A. Acronyms used in this specification are as follows:

1. Actuator: Control device that opens or closes valve or damper in response to control signal.
2. AI: Analog Input.
3. AO: Analog Output.
4. Analog: Continuously variable state over stated range of values.
5. BMS: Building Management System.
6. DDC: Direct Digital Control.

7. Discrete: Binary or digital state.
8. DI: Discrete Input.
9. DO: Discrete Output.
10. FC: Fail Closed position of control device or actuator. Device moves to closed position on loss of control signal or energy source.
11. FO: Fail open (position of control device or actuator). Device moves to open position on loss of control signal or energy source.
12. GUI: Graphical User Interface.
13. HVAC: Heating, Ventilating and Air Conditioning.
14. IDC: Interoperable Digital Controller.
15. ILC: Interoperable Lon Controller.
16. LAN: Local Area Network.
17. Modulating: Movement of a control device through an entire range of values, proportional to an infinitely variable input value.
18. Motorized: Control device with actuator.
19. NAC: Network Area Controller.
20. NC: Normally closed position of switch after control signal is removed or normally closed position of manually operated valves or dampers.
21. NO: Normally open position of switch after control signal is removed; or the open position of a controlled valve or damper after the control signal is removed; or the usual position of a manually operated valve.
22. OSS: Operating System Server, host for system graphics, alarms, trends, etc.
23. Operator: Same as actuator.
24. PC: Personal Computer.
25. Peer-to-Peer: Mode of communication between controllers in which each device connected to network has equal status and each shares its database values with all other devices connected to network.
26. P: Proportional control; control mode with continuous linear relationship between observed input signal and final controlled output element.
27. PI: Proportional-Integral control, control mode with continuous proportional output plus additional change in output based on both amount and duration of change in controller variable (reset control).
28. PICS: BACnet Product Interoperability Compliance Statement.
29. PID: Proportional-Integral-Derivative control, control mode with continuous correction of final controller output element versus input signal based on proportional error, its time history (reset) and rate at which it's changing (derivative).
30. Point: Analog or discrete instrument with addressable database value.
31. WAN: Wide Area Network.

1.6 SUBMITTALS

A. Submit under provisions of Section 013000 - Administrative Requirements.

B. Product Data: Manufacturer's data sheets on each product to be used, including:
1. Catalog Information
2. Detailed Product Information / Data Sheets
3. Installation and/or Maintenance Instructions

C. Submit documentation of contractor qualifications if requested by the A-E.

D. Five copies of shop drawings of the entire control system shall be submitted and shall consist of a complete list of equipment and materials, including manufacturers' catalog data sheets and installation instructions. Submit in printed electronic format. Samples of written Controller Checkout Sheets and Performance Verification Procedures for applications similar

in scope shall be included for approval.

E. Shop drawings shall also contain complete wiring and schematic diagrams, sequences of operation, control system bus layout and any other details required to demonstrate that the system has been coordinated and will properly function as a system. Terminal identification for all control wiring shall be shown on the shop drawings.

F. Upon completion of the work, provide 5 complete sets of ' as-built' drawings and other project-specific documentation in 3-ring hard-backed binders and on digital media.

G. Any deviations from these specifications or the work indicated on the drawings shall be clearly identified in the Submittals.

1.7 QUALITY ASSURANCE

A. The Control System Contractor shall have a full service DDC office within 50 miles of the job site. This office shall be staffed with applications engineers, software engineers and field technicians. This office shall maintain parts inventory and shall have all testing and diagnostic equipment necessary to support this work, as well as staff trained in the use of this equipment.

B. Single Source Responsibility of Supplier: The Control System Contractor shall be responsible for the complete installation and proper operation of the control system. The Control System Contractor shall exclusively be in the regular and customary business of design, installation and service of computerized building management systems similar in size and complexity to the system specified.

C. Equipment and Materials: Equipment and materials shall be cataloged products of manufacturers regularly engaged in the production and installation of HVAC control systems. Products shall be manufacturer's latest standard design and have been tested and proven in actual use.

1.8 DELIVERY, STORAGE AND HANDLING

A. Maintain integrity of shipping cartons for each piece of equipment and control device through shipping, storage and handling as required to prevent equipment damage. Store equipment and materials inside and protected from weather.

1.9 JOB CONDITIONS

A. Cooperation with Other Trades: Coordinate the Work of this section with that of other sections to insure that the Work will be carried out in an orderly fashion. It shall be this Contractor's responsibility to check the Contract Documents for possible conflicts between his Work and that of other crafts in equipment location, pipe, duct and conduit runs, electrical outlets and fixtures, air diffusers and structural and architectural features.

1.10 SEQUENCING

A. Ensure that products of this section are supplied to affected trades in time to prevent interruption of construction progress.

PART 2 PRODUCTS

2.1 MANUFACTURERS

A. Acceptable Manufacturers:

1. Schneider Electric Controls – Automated Building Systems

2.2 GENERAL

A. The Building Management System (BMS) shall be comprised of a network of interoperable, stand-alone digital controllers, a network area controller, graphics and programming and other control devices for a complete system as specified herein.

B. The installed system shall provide secure password access to all features, functions and data contained in the overall BMS.

2.3 OPEN, INTEROPERABLE, INTEGRATED ARCHITECTURE

A. The intent of this specification is to provide a peer-to-peer networked, stand-alone, distributed control system utilizing Open protocols in one open, interoperable system.

B. The supplied computer software shall employ object-oriented technology (OOT) for representation of all data and control devices within the system. Physical connection of any BACnet control equipment shall be via BACnet ms/tp or IP.

C. All components and controllers supplied under this contract shall be true "peer-to-peer" communicating devices. Components or controllers requiring "polling" by a host to pass data shall not be acceptable.

D. The supplied system shall incorporate the ability to access all data using HTML5 enabled browsers without requiring proprietary operator interface and configuration programs or browser plug-ins. An Open Database Connectivity (ODBC) or Structured Query Language (SQL) compliant server database is required for all system database parameter storage. This data shall reside on the Operating System Server located in the Facilities Office on the LAN. Systems requiring proprietary database and user interface programs shall not be acceptable.

E. A hierarchical topology is required to assure reasonable system response times and to manage the flow and sharing of data without unduly burdening the customer's internal Intranet network. Systems employing a "flat" single tiered architecture shall not be acceptable.
   1. Maximum acceptable response time from any alarm occurrence (at the point of origin) to the point of annunciation shall not exceed 5 seconds for network connected user interfaces.
   2. Maximum acceptable response time from any alarm occurrence (at the point of origin) to the point of annunciation shall not exceed 60 seconds for remote or dial-up connected user interfaces.

2.4 BAS SERVER HARDWARE

A. Minimum Computer Configuration (Hardware Independent).
   1. Central Server. Owner shall provide a dedicated BAS server with configuration that includes the following components as a minimum:
   2. Processor: Intel Xeon CPU E5-2640 x64 (or better), compatible with dual- and quad-core processors.
   3. Memory: 2 GB or more recommended for large systems

4. Hard Drive: 256 GB minimum, more recommended depending on archiving requirements.
5. Display: Video card and monitor capable of displaying 1024 x 768 pixel resolution or greater.
6. Network Support: Ethernet adapter (10/100 Mb with RJ-45 connector).
7. Connectivity: Full-time high-speed ISP connection recommended for remote site access (i.e. T1, ADSL, cable modem).

B. Standard Client: The thin-client Web Browser BAS GUI shall be Microsoft Internet Explorer (10.0 or later) running on Microsoft 7+. No special software shall be required to be installed on the PCs used to access the BAS via a web browser.

2.5 SYSTEM NETWORK CONTROLLER (SNC)

A. These controllers are designed to manage communications between the programmable equipment controllers, application specific controllers and advanced unitary controllers which are connected to its communications trunks, manage communications between itself and other system network controllers , and perform control and operating strategies for the system based on information from any controller connected to the BAS.

B. The controllers shall be fully programmable to meet the unique requirements of the facility it shall control.

C. The controllers shall be capable of peer-to-peer communications with other SNC's and with any OWS connected to the BAS, whether the OWS is directly connected, connected via cellular modem or connected via the Internet.

D. The communication protocols utilized for peer-to-peer communications between SNC's will be Niagara 4 Fox, BACnet TCP/IP and SNMP. Use of a proprietary communication protocol for peer-to-peer communications between SNC's is not allowed.

E. The SNC shall employ a device count capacity license model that supports expansion capabilities.

F. The SNC shall be enabled to support and shall be licensed with the following Open protocol drivers (client and server) by default:
1. BACnet
2. Lon
3. MODBUS
4. SNMP
5. KNX

G. The SNC shall be capable of executing application control programs to provide:
1. Calendar functions.
2. Scheduling.
3. Trending.
4. Alarm monitoring and routing.
5. Time synchronization.
6. Integration of LonWorks, BACnet, and MODBUS controller data.
7. Network management functions for all SNC, PEC and ASC based devices.

H. The SNC shall provide the following hardware features as a minimum:
1. Two 10/100 Mbps Ethernet ports.
2. Two Isolated RS-485 ports with biasing switches.

3. 1 GB RAM
4. 4 GB Flash Total Storage / 2 GB User Storage
5. Wi-Fi (Client or WAP)
6. USB Flash Drive
7. High Speed Field Bus Expansion
8. -20-60 degreesC Ambient Operating Temperature
9. Integrated 24 VAC/DC Global Power Supply
10. MicroSD Memory Card Employing Encrypted Safe Boot Technology

I. The SNC shall support standard Web browser access via the Intranet/Internet. It shall support a minimum of 16 simultaneous users.

J. The SNC shall provide alarm recognition, storage, routing, management and analysis to supplement distributed capabilities of equipment or application specific controllers.

K. The SNC shall be able to route any alarm condition to any defined user location whether connected to a local network or remote via cellular modem, or wide-area network.
   1. Alarm generation shall be selectable for annunciation type and acknowledgement requirements including but not limited to:
      a. Alarm.
      b. Return to normal.
      c. To default.
   2. Alarms shall be annunciated in any of the following manners as defined by the user:
      a. Screen message text.
      b. Email of complete alarm message to multiple recipients.
      c. Pagers via paging services that initiate a page on receipt of email message.
      d. Graphics with flashing alarm object(s).
   3. The following shall be recorded by the SNC for each alarm (at a minimum):
      a. Time and date.
      b. Equipment (air handler #, access way, etc.).
      c. Acknowledge time, date, and user who issued acknowledgement.

L. Programming software and all controller "Setup Wizards" shall be embedded into the SNC.

M. The SNC shall support the following security functions.
   1. Module code signing to verify the author of programming tool and confirm that the code has not been altered or corrupted.
   2. Role-Based Access Control (RBAC) for managing user roles and permissions.
   3. Require users to use strong credentials.
   4. Data in Motion and Sensitive Data at Rest be encrypted.
   5. LDAP and Kerberos integration of access management.

N. The SNC shall support the following data modeling structures to utilize Search; Hierarchy; Template; and Permission functionality:
   1. Metadata: Descriptive tags to define the structure of properties.
   2. Tagging: Process to apply metadata to components
   3. Tag Dictionary

O. The SNC shall employ template functionality. Templates are a containerized set of configured data tags, graphics, histories, alarms... that are set to be deployed as a unit based upon manufacturer's controller and relationships. All lower level communicating controllers (PEC, AUC, AVAV, VFD.) shall have an associated template file for reuse on future project additions.

2.6 PROGRAMMABLE EQUIPMENT CONTROLLER (PEC)

A. HVAC control shall be accomplished using BACnet based devices where the application has a BTL Listed PICS defined. The controller platform shall provide options and advanced system functions, programmable and configurable using Niagara 4 Framework, that allow standard and customizable control solutions required in executing the "Sequence of Operation".

B. All PECs shall be application programmable and shall at all times maintain their certification. All control sequences within or programmed into the PEC shall be stored in non-volatile memory, which is not dependent upon the presence of a battery to be retained.

C. The PEC shall provide LED indication of communication and controller performance to the technician, without cover removal.

D. The PEC shall not require any external configuration tool or programming tool. All configuration and programming tasks shall be accomplished and accessible from within the Niagara 4 environment.

E. The following integral and remote Inputs/Outputs shall be supported per each PEC:
   1. Digital inputs.
   2. Analog inputs (configurable as 0-10V, 0-10,000 ohm or, 20K NTC).
   3. Analog outputs.
   4. Digital outputs, configurable as maintained or floating motor control outputs.
   5. One integral power supply for auxiliary devices.
   6. If a 20 Vdc 65-mA power supply terminal is not integral to the PEC, provide at each PEC a separate, fully isolated, enclosed, current limited and regulated UL listed auxiliary power supply for power to auxiliary devices.

F. Each PEC shall have expansion ability to support additional I/O requirements through the use of remote input/output modules.

G. PEC Controllers shall support at minimum the following control techniques:
   1. General-purpose control loops that can incorporate Demand Limit Control strategies, Set point reset, adaptive intelligent recovery, and time of day bypass.
   2. General-purpose, non-linear control loops.
   3. Start/stop Loops.
   4. If/Then/Else logic loops.
   5. Math Function loops (MIN, MAX, AVG, SUM, SUB, SQRT, MUL, DIV, ENTHALPY).

2.7 OTHER CONTROL SYSTEM HARDWARE

A. Wall Mount Room Temperature sensors: Room temperature sensors will be provided with HVAC equipment package. Each room temperature sensor shall provide temperature indication to the factory, digital controller, provide the capability for a software-limited occupant set point adjustment and limited operation override capability. Remote adjustment of room set points and limits of set points shall be adjustable from the BMS.

B. Humidity sensors shall be thin-film capacitive type sensor with on-board nonvolatile memory, accuracy to plus or minus two percent (2%) at 10 to 95% RH, 12 - 30 VDC input voltage, analog output (0 - 10 VDC or 4 - 20mA output). Operating range shall be 0 to 100% RH and 32 to 122 degrees F.

C. Carbon Dioxide Sensors (CO2): Sensors shall utilize Non-dispersive infrared technology. Sensor range shall be 0 - 2000 PPM. Accuracy shall be plus or minus three percent (3%) or 40 PPM, whichever is greater. Response shall be less than two minutes. Input voltage shall be 20 to 30 VAC or DC. Output shall be 0 - 10 VDC.

D. Current Sensitive Switches: Solid state, split core current switch that operates when the current level (sensed by the internal current transformer) exceeds the adjustable trip point. Current switch to include an integral LED for indication of trip condition and a current level below trip set point.

E. Differential Analog (duct) Static Pressure Transmitters Provide a pressure transmitter with integral capacitance type sensing and solid-state circuitry. Accuracy shall be plus or minus 1% of full range; range shall be selected for the specific application. Provide zero and span adjustment capability. Device shall have integral static pickup tube.

F. Differential Air Pressure Switches: Provide SPDT type, UL-approved, and selected for the appropriate operating range where applied. Switches shall have adjustable set points and barbed pressure tips.

G. Temperature Control Panels: Furnish temperature control panels of code gauge steel with hinged doors for each DDC controller. A complete set of ' as-built' control drawings (relating to the controls within that panel) shall be furnished within each control panel.

H. Pipe and Duct Temperature sensing elements: 20,000-ohm thermistor temperature sensors with and accuracy of ±1% accuracy. Their range shall be -5 to 250 degrees F (-20 to 121 degrees C). Limited range sensors shall be acceptable provided they are capable of sensing the range expected for the point at the specified accuracy. Thermal wells with heat conductive gel shall be included.

I. Low Air Temperature Sensors: Provide SPST type switch, with 15 to 55 degrees F (-9 to 13 degrees C), range, vapor-charged temperature sensor. Honeywell model L482A, or approved equivalent.

J. Variable Frequency Drives: The variable frequency drives (VFD) for this project shall be provided factory installed with the HVAC equipment.

K. Relays: Start/stop relay model shall provide either momentary or maintained switching action as appropriate for the motor being started. All relays shall be plugged in, interchangeable, mounted on a sub base and wired to numbered terminals strips. Relays installed in panels shall all be DPDT with indicating lamp. Relays installed outside of controlled devices shall be enclosed in a NEMA enclosure suitable for the location. Relays shall be labeled with UR symbol. RIB-style relays are acceptable for remote enable/disable.

L. Control Power Transformers: Provide step-down transformers for all DDC controllers and devices as required. Transformers shall be sized for the load, but shall be sized for 50 watts, minimum. Transformers shall be UL listed Class 2 type, for 120 VAC/24 VAC operation.

M. Line voltage protection: All DDC system control panels that are powered by 120 VAC circuits shall be provided with surge protection. This protection is in addition to any internal protection provided by the manufacturer. The protection shall meet UL, ULC 1449, IEEE C62.41B. A grounding conductor, (minimum 12 AWG), shall be brought to each control panel.

2.8 BAS SERVER & WEB BROWSER GUI - SYSTEM OVERVIEW

A. The BAS Contractor shall provide system software based on server/thin-client architecture, designed around the open standards of web technology. The BAS server shall communicate using Ethernet and TCP. Server shall be accessed using a web browser over Owner intranet and remotely over the Internet.

B. The intent of the thin-client architecture is to provide the operator(s) complete access to the BAS system via a web browser. The thin-client web browser Graphical User Interface (GUI) shall be browser and operating system agnostic, meaning it will support HTML5 enabled browsers without requiring proprietary operator interface and configuration programs or browser plug-ins. Microsoft, Firefox, and Chrome browsers (current released versions), and Windows as well as non-Window operating systems.

C. The BAS server software shall support at least the following server platforms (Windows 7, 8.1, Server 12). The BAS server software shall be developed and tested by the manufacturer of the system stand-alone controllers and network controllers/routers.

D. The web browser GUI shall provide a completely interactive user interface and shall provide a HTML5 experience that supports the following features as a minimum:
   1. Trending.
   2. Scheduling.
   3. Electrical demand limiting.
   4. Duty Cycling.
   5. Downloading Memory to field devices.
   6. Real time 'live' Graphic Programs.
   7. Tree Navigation.
   8. Parameter change of properties.
   9. Set point adjustments.
   10. Alarm / event information.
   11. Configuration of operators.
   12. Execution of global commands.
   13. Add, delete, and modify graphics and displayed data.

E. Software Components: All software shall be the most current version. All software components of the BAS system software shall be provided and installed as part of this project. BAS software components shall include:
   1. Server Software, Database and Web Browser Graphical User Interface.
   2. 1 Year Software Maintenance license.
   3. Embedded System Configuration Utilities for future modifications to the system and controllers.
   4. Embedded Graphical Programming Tools.
   5. Embedded Direct Digital Control software.
   6. Embedded Application Software.

F. BAS Server Database: The BAS server software shall utilize a Java Database Connectivity (JDBC) compatible database such as: MS SQL 8.0, Oracle 8i or IBM DB2. BAS systems written to Non -Standard and/or Proprietary databases are NOT acceptable.

G. Thin Client - Web Browser Based: The GUI shall be thin client or browser based and shall meet the following criteria:
   1. Web Browser's for PC's: Only the current released browser (Explorer/Firefox/Chrome) will be required as the GUI and a valid connection to the server network. No installation of any custom software shall be required on the operator's GUI workstation/client. Connection shall be over an intranet or the Internet.
   2. Secure Socket Layers: Communication between the Web Browser GUI and BAS

server shall offer encryption using 128-bit encryption technology within Secure Socket Layers (SSL). Communication protocol shall be Hyper-Text Transfer Protocol (HTTP).

2.9 WEB BROWSER GRAPHICAL USER INTERFACE

A. Web Browser Navigation: The Thin Client web browser GUI shall provide a comprehensive user interface. Using a collection of web pages, it shall be constructed to "feel" like a single application, and provide a complete and intuitive mouse/menu driven operator interface. It shall be possible to navigate through the system using a web browser to accomplish requirements of this specification. The Web Browser GUI shall (as a minimum) provide for navigation, and for display of animated graphics, schedules, alarms/events, live graphic programs, active graphic set point controls, configuration menus for operator access, reports and reporting actions for events.

B. Login: On launching the web browser and selecting the appropriate domain name or IP address, the operator shall be presented with a login page that will require a login name and strong password. Navigation in the system shall be dependent on the operator's role-based application control privileges.

C. Navigation: Navigation through the GUI shall be accomplished by clicking on the appropriate level of a navigation tree (consisting of an expandable and collapsible tree control like Microsoft's Explorer program) and/or by selecting dynamic links to other system graphics. Both the navigation tree and action pane shall be displayed simultaneously, enabling the operator to select a specific system or equipment and view the corresponding graphic. The navigation tree shall as a minimum provide the following views: Geographic, Network, Groups and Configuration.
   1. Geographic View shall display a logical geographic hierarchy of the system including: cities, sites, buildings, building systems, floors, equipment and objects.
   2. Groups View shall display Scheduled Groups and custom reports.
   3. Configuration View shall display all the configuration categories (Operators, Schedule, Event, Reporting and Roles).

D. Action Pane: The Action Pane shall provide several functional views for each subsystem specified. A functional view shall be accessed by clicking on the corresponding button:
   1. Graphics: Using graphical format suitable for display in a web browser, graphics shall include aerial building/campus views, color building floor-plans, equipment drawings, active graphic set point controls, web content and other valid HTML elements. The data on each graphic page shall automatically refresh.
   2. Dashboards: User customizable data using drag and drop HTML5 elements. Shall include Web Charts, Gauges, and other custom developed widgets for web browser. User shall have ability to save custom dashboards.
   3. Search: User shall have multiple options for searching data based upon Tags. Associated equipment, real time data, Properties, and Trends shall be available in result.
   4. Properties: Shall include graphic controls and text for the following: Locking or overriding objects, demand strategies, and any other valid data required for setup. Changes made to the properties pages shall require the operator to depress an 'accept/cancel' button.
   5. Schedules: Shall be used to create, modify/edit and view schedules based on the systems hierarchy (using the navigation tree).
   6. Alarms: Shall be used to view alarm information geographically (using the navigation tree), acknowledge alarms, sort alarms by category, actions and verify reporting actions.
   7. Charting: Shall be used to display associated trend and historical data, modify colors,

date range, axis and scaling. User shall have ability to create HTML charts through web browser without utilizing chart builder. User shall be able to drag and drop single or multiple data points, including schedules, and apply status colors for analysis.

8. Logic - Live Graphic Programs: Shall be used to display' live' graphic programs of the control algorithm, (micro block programming) for the mechanical/electrical system selected in the navigation tree.
9. Other actions such as Print, Help, Command, and Logout shall be available via a drop-down window.

E. Color Graphics: The Web Browser GUI shall make extensive use of color in the graphic pane to communicate information related to set points and comfort. Animated .gifs or .jpg, vector scalable, active set point graphic controls shall be used to enhance usability. Graphics tools used to create Web Browser graphics shall be non-proprietary and conform to the following basic criteria:
   1. Display Size: The GUI workstation software shall graphically display in a minimum of 1024 by 768 pixels 24 bit True Color.
   2. General Graphic: General area maps shall show locations of controlled buildings in relation to local landmarks.
   3. Color Floor Plans: Floor plan graphics shall show heating and cooling zones throughout the buildings in a range of colors, as selected by Owner. Provide a visual display of temperature relative to their respective set points. The colors shall be updated dynamically as a zone's actual comfort condition changes.
   4. Mechanical Components: Mechanical system graphics shall show the type of mechanical system components serving any zone through the use of a pictorial representation of components. Selected I/O points being controlled or monitored for each piece of equipment shall be displayed with the appropriate engineering units. Animation shall be used for rotation or moving mechanical components to enhance usability. .
   5. Minimum System Color Graphics: Color graphics shall be selected and displayed via a web browser for the following:
      a. Each piece of equipment monitored or controlled including each terminal unit.
      b. Each building.
      c. Each floor and zone controlled.

F. Hierarchical Schedules: Utilizing the Navigation Tree displayed in the web browser GUI, an operator (with proper access credentials) shall be able to define a Normal, Holiday or Override schedule for an individual piece of equipment or room, or choose to apply a hierarchical schedule to the entire system, site or floor area. All schedules that affect the system/area/equipment highlighted in the Navigation Tree shall be shown in a summary schedule table and graph.
   1. Schedules: Schedules shall comply with the LonWorks and BACnet standards, (Schedule Object, Calendar Object, Weekly Schedule property and Exception Schedule property) and shall allow events to be scheduled based on:
      a. Types of schedule shall be Normal, Holiday or Override.
      b. A specific date.
      c. A range of dates.
      d. Any combination of Month of Year (1-12, any), Week of Month (1-5, last, any), Day of Week (M-Sun, Any).
      e. Wildcard (example, allow combinations like second Tuesday of every month).
   2. Schedule Categories: The system shall allow operators to define and edit scheduling categories (different types of "things" to be scheduled; for example, lighting, HVAC occupancy, etc.). The categories shall include: name, description, icon (to display in the hierarchy tree when icon option is selected) and type of value to be scheduled.

3. Schedule Groups: In addition to hierarchical scheduling, operators shall be able to define functional Schedule Groups, comprised of an arbitrary group of areas/rooms/equipment scattered throughout the facility and site. For example, the operator shall be able to define an ' individual tenant' group - who may occupy different areas within a building or buildings. Schedules applied to the ' tenant group' shall automatically be downloaded to control modules affecting spaces occupied by the ' tenant group'.
4. Intelligent Scheduling: The control system shall be intelligent enough to automatically turn on any supporting equipment needed to control the environment in an occupied space. If the operator schedules an individual room in a VAV system for occupancy, for example, the control logic shall automatically turn on the VAV air handling unit, chiller, boiler and/or any other equipment required to maintain the specified comfort and environmental conditions within the room.
5. Partial Day Exceptions: Schedule events shall be able to accommodate a time range specified by the operator (ex: board meeting from 6 pm to 9 pm overrides Normal schedule for conference room).
6. Schedule Summary Graph: The schedule summary graph shall clearly show Normal versus Holiday versus Override Schedules and the net operating schedule that results from all contributing schedules. Note: In case of priority conflict between schedules at the different geographic hierarchy, the schedule for the more detailed geographic level shall apply.

G. Alarms: Alarms associated with a specific system, area, or equipment selected in the Navigation Tree, shall be displayed in the Action Pane by selecting an ' Alarms' view. Alarms, and reporting actions shall have the following capabilities:
1. Alarms View: Each Alarm shall display an Alarms Category (using a different icon for each alarm category), date/time of occurrence, current status, alarm report and a bold URL link to the associated graphic for the selected system, area or equipment. The URL link shall indicate the system location, address and other pertinent information. An operator shall easily be able to sort events, edit event templates and categories, acknowledge or force a return to normal in the Events View as specified in this section.
2. Alarm Categories: The operator shall be able to create, edit or delete alarm categories such as HVAC, Maintenance, Fire, or Generator. An icon shall be associated with each alarm category, enabling the operator to easily sort through multiple events displayed.
3. Alarm Templates: Alarm template shall define different types of alarms and their associated properties. As a minimum, properties shall include a reference name, verbose description, severity of alarm, acknowledgement requirements, and high/low limit and out of range information.
4. Alarm Areas: Alarm Areas enable an operator to assign specific Alarm Categories to specific Alarm Reporting Actions. For example, it shall be possible for an operator to assign all HVAC Maintenance Alarm on the 1st floor of a building to email the technician responsible for maintenance. The Navigation Tree shall be used to setup Alarm Areas in the Graphic Pane.
5. Alarm Time/Date Stamp: All events shall be generated at the DDC control module level and comprise the Time/Date Stamp using the standalone control module time and date.
6. Alarm Configuration: Operators shall be able to define the type of Alarm generated per object. A ' network' view of the Navigation Tree shall expose all objects and their respective Alarm Configuration. Configuration shall include assignment of Alarm, type of Acknowledgement and notification for return to normal or fault status.
7. Alarm Summary Counter: The view of Alarm in the Graphic Pane shall provide a

numeric counter, indicating how many Alarms are active (in alarm), require acknowledgement and total number of Alarms in the BAS Server database.

8. Alarm Auto-Deletion: Alarms that are acknowledged and closed shall be auto-deleted from the database and archived to a text file after an operator defined period.
9. Alarm Reporting Actions: Alarm Reporting Actions specified shall be automatically launched (under certain conditions) after an Alarm is received by the BAS server software. Operators shall be able to easily define these Reporting Actions using the Navigation Tree and Graphic Pane through the web browser GUI. Reporting Actions shall be as follows:
    a. Print: Alarm information shall be printed to the BAS server's PC or a networked printer.
    b. Email: Email shall be sent via any POP3-compatible e-mail server (most Internet Service Providers use POP3). Email messages may be copied to several email accounts. Note: Email reporting action shall also be used to support alphanumeric paging services, where email servers support pagers.
    c. File Write: The ASCII File write reporting action shall enable the operator to append operator defined alarm information to any alarm through a text file. The alarm information that is written to the file shall be completely definable by the operator. The operator may enter text or attach other data point information (such as AHU discharge temperature and fan condition upon a high room temperature alarm).
    d. Write Property: The write property reporting action updates a property value in a hardware module.
    e. SNMP: The Simple Network Management Protocol (SNMP) reporting action sends an SNMP trap to a network in response to receiving an alarm.
    f. Run External Program: The Run External Program reporting action launches specified program in response to an event.

H. Trends: As system is engineered, all points shall be enabled to trend. Trends shall both be displayed and user configurable through the Web Browser GUI. Trends shall comprise analog, digital or calculated points simultaneously. A trend log's properties shall be editable using the Navigation Tree and Graphic Pane.
    1. Viewing Trends: The operator shall have the ability to view trends by using the Navigation Tree and selecting a Trends button in the Graphic Pane. The system shall allow y- and x-axis maximum ranges to be specified and shall be able to simultaneously graphically display multiple trends per graph.
    2. Local Trends: Trend data shall be collected locally by Multi-Equipment/Single Equipment general-purpose controllers, and periodically uploaded to the BAS server if historical trending is enabled for the object. Trend data, including run time hours and start time date shall be retained in non-volatile module memory. Systems that rely on a gateway/router to run trends are NOT acceptable.
    3. Resolution. Sample intervals shall be as small as one second. Each trended point will have the ability to be trended at a different trend interval. When multiple points are selected for displays that have different trend intervals, the system will automatically scale the axis.
    4. Dynamic Update. Trends shall be able to dynamically update at operator-defined intervals.
    5. Zoom/Pan. It shall be possible to zoom-in on a particular section of a trend for more detailed examination and ' pan through' historical data by simply scrolling the mouse.
    6. Numeric Value Display. It shall be possible to pick any sample on a trend and have the numerical value displayed.
    7. Copy/Paste. The operator shall have the ability to pan through a historical trend and copy the data viewed to the clipboard using standard keystrokes (i.e. CTRL+C,

CTRL+V).

I. Security Access: Systems that are accessedfrom the web browser GUI to BAS server shall require a Login Name and Strong Password. Access to different areas of the BAS system shall be defined in terms of Role-Based Access Control privileges as specified:
   1. Roles: Roles shall reflect the actual roles of different types of operators. Each role shall comprise a set of ' easily understood English language' privileges. Roles shall be defined in terms of View, Edit and Function Privileges.
      a. View Privileges shall comprise: Navigation, Network, and Configuration Trees, Operators, Roles and Privileges, Alarm/Event Template and Reporting Action.
      b. Edit Privileges shall comprise: Set point, Tuning and Logic, Manual Override, and Point Assignment Parameters.
      c. Function Privileges shall comprise: Alarm/Event Acknowledgement, Control Module Memory Download, Upload, Schedules, Schedule Groups, Manual Commands, Print and Alarm/Event Maintenance.
   2. Geographic Assignment of Roles: Roles shall be geographically assigned using a similar expandable/collapsible navigation tree. For example, it shall be possible to assign two HVAC Technicians with similar competencies (and the same operator defined HVAC Role) to different areas of the system.

2.10 GRAPHICAL PROGRAMMING

A. The system software shall include a Graphic Programming Language (GPL) for all DDC control algorithms resident in all control modules. Any system that does not use a drag and drop method of graphical icon programming shall not be accepted. All systems shall use a GPL method used to create a sequence of operations by assembling graphic microblocks that represent each of the commands or functions necessary to complete a control sequence. Microblocks represent common logical control devices used in conventional control systems, such as relays, switches, high signal selectors etc., in addition to the more complex DDC and energy management strategies such as PID loops and optimum start. Each microblock shall be interactive and contain the programming necessary to execute the function of the device it represents.

B. Graphic programming shall be performed while on screen and using a mouse; each microblock shall be selected from a microblock library and assembled with other microblocks necessary to complete the specified sequence. Microblocks are then interconnected on screen using graphic "wires," each forming a logical connection. Once assembled, each logical grouping of microblocks and their interconnecting wires then forms a graphic function block which may be used to control any piece of equipment with a similar point configuration and sequence of operation.

C. Graphic Sequence: The clarity of the graphic sequence shall be such that the operator has the ability to verify that system programming meets the specifications, without having to learn or interpret a manufacturer's unique programming language. The graphic programming shall be self-documenting and provide the operator with an understandable and exact representation of each sequence of operation.

D. GPL Capabilities: The following is a minimum definition of the capabilities of the Graphic Programming software:
   1. Function Block (FB): Shall be a collection of points, microblocks and wires which have been connected together for the specific purpose of controlling a piece of HVAC equipment or a single mechanical system.
   2. Logical I/O: Input/Output points shall interface with the control modules in order to read various signals and/or values or to transmit signal or values to controlled

devices.

3. Microblocks: Shall be software devices that are represented graphically and may be connected together to perform a specified sequence. A library of microblocks shall be submitted with the control contractors bid.
4. Wires: Shall be Graphical elements used to form logical connections between microblocks and between logical I/O.
5. Reference Labels: Labels shall be similar to wires in that they are used to form logical connections between two points. Labels shall form a connection by reference instead of a visual connection, i.e. two points labeled 'A' on a drawing are logically connected even though there is no wire between them.
6. Parameter: A parameter shall be a value that may be tied to the input of a microblock.
7. Properties: Dialog boxes shall appear after a microblock has been inserted which has editable parameters associated with it. Default parameter dialog boxes shall contain various editable and non-editable fields, and shall contain 'push buttons' for the purpose of selecting default parameter settings.
8. Icon: An icon shall be graphic representation of a software program. Each graphic microblock has an icon associated with it that graphically describes its function.
9. Menu-bar Icon: Shall be an icon that is displayed on the menu bar on the GPL screen, which represents its associated graphic microblock.
10. Live Graphical Programs: The Graphic Programming software shall support a ' live' mode, where all input/output data, calculated data and set points shall be displayed in a ' live' real-time mode.

PART 3 EXECUTION

3.1 EXAMINATION

A. Do not begin installation until substrates have been properly prepared.

B. If substrate preparation is the responsibility of another installer, notify Architect of unsatisfactory preparation before proceeding.

3.2 PREPARATION

A. Clean surfaces thoroughly prior to installation.

B. Prepare surfaces using the methods recommended by the manufacturer for achieving the best result for the substrate under the project conditions.

3.3 GENERAL

A. Install system and materials in accordance with manufacturer's instructions, and as detailed on the project drawing set.

B. Line and low voltage electrical connections to control equipment shown specified or shown on the control diagrams shall be furnished and installed by the Control System Contractor in accordance with these specifications.

C. Equipment furnished by the Mechanical Contractor that is normally wired before installation shall be furnished completely wired. Control wiring normally performed in the field will be furnished and installed by the Control System Contractor.

D. All control devices mounted on the face of control panels shall be clearly identified as to function and system served with permanently engraved phenolic labels.

3.4 WIRING

A. All electrical control wiring to the control panels shall be the responsibility of the Control System Contractor.

B. All wiring shall be in accordance with the Project Electrical Specifications (Division 26), the National Electrical Code and any applicable local codes. All control wiring shall be installed in raceways.

C. Excess wire shall not be looped or coiled in the controller cabinet.

D. Incorporate electrical noise suppression techniques in relay control circuits.

E. There shall be no drilling on the controller cabinet after the controls are mounted inside.

F. Careful stripping of wire while inside the cabinet is required to ensure that no wire strand fragments land on circuit boards.

G. Use manufacturer-specified wire for all network connections.

H. Use approved optical isolation and lightning protection when penetrating building envelope.

I. Read installation instructions carefully. Any unavoidable deviations shall be approved by owner's rep prior to installation.

3.5 ACCEPTANCE TESTING

A. Upon completion of the installation, the Control System Contractor shall load all system software and start-up the system. The Control System Contractor shall perform all necessary calibration, testing and de-bugging and perform all required operational checks to insure that the system is functioning in full accordance with these specifications.

B. The Control System Contractor shall perform tests to verify proper performance of components, routines and points. Repeat tests until proper performance results. This testing shall include a point-by-point log to validate 100% of the input and output points of the DDC system operation.

C. System Acceptance: Satisfactory completion is when the Control System Contractor has performed successfully all the required testing to show performance compliance with the requirements of the Contract Documents to the satisfaction of the Owner's Representative. System acceptance shall be contingent upon completion and review of all corrected deficiencies.

3.6 OPERATOR TRAINING

A. During system commissioning and at such time acceptable performance of the Control System hardware and software has been established, the Control System Contractor shall provide on-site operator instruction to the owner's operating personnel. Operator instruction shall be done during normal working hours and shall be performed by a competent representative familiar with the system hardware, software and accessories.

B. The Control System Contractor shall provide 8 total hours of comprehensive training for system orientation, product maintenance, and troubleshooting, The training shall start after final commissioning.

3.7 WARRANTY PERIOD SERVICES

A. Equipment, materials and workmanship incorporated into the work shall be warranted for a period of one year from the time of system acceptance.

B. Within this period, upon notice by the Owner, any defects in the BMS due to faulty materials, methods of installation or workmanship shall be promptly repaired or replaced by the Control System Contractor at no expense to the Owner.

C. Maintenance of Control Hardware: The Control System Contractor shall inspect, repair, replace, adjust, and calibrate, as required, the controllers, control devices and associated peripheral units during the warranty period. The Control System Contractor shall then furnish a report describing the status of the equipment, problem areas (if any) noticed during service work, and description of the corrective actions taken. The report shall clearly certify that all hardware is functioning correctly.

D. Service Period: Calls for service by the Owner shall be honored within 24 hours and are not to be considered as part of routine maintenance.

E. Service Documentation: A copy of the service report associated with each owner-initiated service call shall be provided to the owner.

3.8 WARRANTY ACCESS

A. The Owner shall grant to the Control System Contractor reasonable access to the BMS during the warranty period. Remote access to the BMS (for the purpose of diagnostics and troubleshooting, via the Internet, during the warranty period) will be allowed.

3.9 OPERATION & MAINTENANCE MANUALS

A. See Division 1 for requirements. O&M manuals shall include the following elements, as a minimum:
   1. As-built control drawings for all equipment.
   2. As-built Network Communications Diagram.
   3. General description and specifications for all components.
   4. Completed Performance Verification sheets.
   5. Completed Controller Checkout/Calibration Sheets.

3.10 PROTECTION

A. Protect installed products until completion of project.

B. Touch-up, repair or replace damaged products before Substantial Completion.

END OF SECTION

SECTION 26 0519

LOW-VOLTAGE ELECTRICAL POWER CONDUCTORS AND CABLES

PART 1 - GENERAL

1.1 RELATED DOCUMENTS

A. Drawings and general provisions of the Contract, including General and Supplementary Conditions and Division 01 Specification Sections, apply to this Section.

1.2 SUMMARY

A. Section Includes:

1. Copper building wire rated 600 V or less.
2. Aluminum building wire rated 600 V or less.
3. Metal-clad cable, Type MC, rated 600 V or less.
4. Connectors, splices, and terminations rated 600 V and less.

1.3 DEFINITIONS

A. RoHS: Restriction of Hazardous Substances.

B. VFC: Variable-frequency controller.

1.4 ACTION SUBMITTALS

A. Product Data: For each type of product.

B. Product Schedule: Indicate type, use, location, and termination locations.

1.5 INFORMATIONAL SUBMITTALS

A. Qualification Data: For testing agency.

B. Field quality-control reports.

1.6 QUALITY ASSURANCE

A. Testing Agency Qualifications: Member company of NETA.

1. Testing Agency's Field Supervisor: Certified by NETA to supervise on-site testing.

PART 2 - PRODUCTS

2.1 COPPER BUILDING WIRE

A. Description: Flexible, insulated and uninsulated, drawn copper current-carrying conductor with an overall insulation layer or jacket, or both, rated 600 V or less.

B. Standards:

1. Listed and labeled as defined in NFPA 70, by a qualified testing agency, and marked for intended location and use.
2. RoHS compliant.
3. Conductor and Cable Marking: Comply with wire and cable marking according to UL's "Wire and Cable Marking and Application Guide."
4. #10 AWG and smaller shall be solid (not stranded).

C. Conductors: Copper, complying with ASTM B 3 for bare annealed copper and with ASTM B 496 for stranded conductors.

D. Conductor Insulation:

1. Type NM: Comply with UL 83 and UL 719.
2. Type RHH and Type RHW-2: Comply with UL 44.
3. Type USE-2 and Type SE: Comply with UL 854.
4. Type TC-ER: Comply with NEMA WC 70/ICEA S-95-658 and UL 1277.
5. Type THHN and Type THWN-2: Comply with UL 83.
6. Type THW and Type THW-2: Comply with NEMA WC-70/ICEA S-95-658 and UL 83.
7. Type UF: Comply with UL 83 and UL 493.
8. Type XHHW-2: Comply with UL 44.

E. Shield:

1. Type TC-ER: Cable designed for use with VFCs, with oversized crosslinked polyethylene insulation dual spirally wrapped copper tape shields and three bare symmetrically applied ground wires, and sunlight- and oil-resistant outer PVC jacket.

2.2 ALUMINUM BUILDING WIRE

1. Allowed only as a cost savings request by the owner.
2. Owner shall provide permission in writing (email).
3. Contractor shall obtain written permission (email) from local AHJ.
4. Do not submit bids with aluminum as basis of install unless approved prior to bid date.

2.3 METAL-CLAD CABLE, TYPE MC

A. Description: A factory assembly of one or more current-carrying insulated conductors in an overall metallic sheath. MC cable shall include grounding conductor.

B. Shall primarily be used as whips for connections to equipment and lighting not to exceed 6ft in

length.

C. Standards:

1. Listed and labeled as defined in NFPA 70, by a qualified testing agency, and marked for intended location and use.
2. Comply with UL 1569.
3. RoHS compliant.
4. Conductor and Cable Marking: Comply with wire and cable marking according to UL's "Wire and Cable Marking and Application Guide."

D. Conductors: Copper, complying with ASTM B 3 for bare annealed copper and with ASTM B 8 for stranded conductors.

E. Ground Conductor: Insulated.

F. Conductor Insulation:

1. Type TFN/THHN/THWN-2: Comply with UL 83.
2. Type XHHW-2: Comply with UL 44.

G. MC Steel Metal Clad Cable Requirements:
1. MC Steel Metal Clad Cable must have the following:
   a. Armor: Galvanized interlocking steel strip.
   b. Conductors: Solid Copper.
   c. Conductor Insulation: THHN/THWN
   d. Assembly Covering: Polypropylene Tape
   e. Maximum Temperature Rating: 90°C (dry)
   f. Grounding: One grounding means, must be insulated copper conductor.
   g. Neutral Conductor: White
   h. Maximum Voltage Rating: 600V
   i. Rating Compliance with the following:
      1) UL® 83, 1479, 1569, 1581, 2556
      2) Cable Tray Rated, install per NEC®
      3) UL® Classified 1, 2, and 3 hour through (Fire) penetration product, R–14141
      4) Environmental Air-Handling Space Installation per NEC® 300.22(C)

2. Do Not Use MC Cable for the Following:
   a. Homeruns to panelboards.
   b. Where exposed to view.
   c. Where exposed to damage.
   d. Hazardous locations.
   e. Wet locations.
   f. When restricted otherwise above, and when specifically disallowed by the local AHJ or Owner.
   g. Circuits supplied by an emergency or standby power source.

3. Aluminum sheathing for MC Cable is not allowed.

2.4 CONNECTORS AND SPLICES

A. Description: Factory-fabricated connectors, splices, and lugs of size, ampacity rating, material, type, and class for application and service indicated; listed and labeled as defined in NFPA 70,

by a qualified testing agency, and marked for intended location and use.

B. Jacketed Cable Connectors: For steel and aluminum jacketed cables, zinc die-cast with set screws, designed to connect conductors specified in this Section.

C. Lugs: One piece, seamless, designed to terminate conductors specified in this Section.

1. Material: Copper.
2. Termination: Compression.

PART 3 - EXECUTION

3.1 CONDUCTOR MATERIAL APPLICATIONS

A. Feeders: Copper; solid for No. 10 AWG and smaller; stranded for No. 8 AWG and larger.

B. Feeders: Copper for feeders smaller than No. 4 AWG; copper or aluminum for feeders No. 4 AWG and larger. Conductors shall be solid for No. 10 AWG and smaller; stranded for No. 8 AWG and larger.

C. Branch Circuits: Copper. Solid for No. 10 AWG and smaller; stranded for No. 8 AWG and larger.

D. Branch Circuits: Copper. Solid for No. 12 AWG and smaller; stranded for No. 10 AWG and larger.

E. VFC Output Circuits Cable: Extra-flexible stranded for all sizes.

F. Power-Limited Fire Alarm and Control: Solid for No. 12 AWG and smaller.

3.2 CONDUCTOR INSULATION AND MULTICONDUCTOR CABLE APPLICATIONS AND WIRING METHODS

A. Service Entrance: Type THHN/THWN-2, single conductors in raceway.

B. Exposed Feeders: Type XHHW-2, single conductors in raceway.

C. Feeders Concealed in Ceilings, Walls, Partitions, and Crawlspaces: Type THHN/THWN-2, single conductors in raceway.

D. Feeders Concealed in Concrete, below Slabs-on-Grade, and Underground: Type XHHW-2, single conductors in raceway.

E. Feeders Installed below Raised Flooring: Type THHN/THWN-2, single conductors in raceway.

F. Feeders in Cable Tray: Type THHN/THWN-2, single conductors in raceway.

G. Exposed Branch Circuits, Including in Crawlspaces: Type THHN/THWN-2, single conductors in raceway.

H. Branch Circuits Concealed in Ceilings, Walls, and Partitions: Type THHN/THWN-2, single

conductors in raceway.

I. Branch Circuits Concealed in Concrete, below Slabs-on-Grade, and Underground: Type XHHW-2, single conductors in raceway.

J. Branch Circuits Installed below Raised Flooring: Type THHN/THWN-2, single conductors in raceway.

K. Branch Circuits in Cable Tray: Type XHHW-2, single conductors larger than No. 1/0 AWG.

L. Cord Drops and Portable Appliance Connections: Type SO, hard service cord with stainless-steel, wire-mesh, strain relief device at terminations to suit application.

M. VFC Output Circuits: Type XHHW-2 in metal conduit.

3.3 INSTALLATION OF CONDUCTORS AND CABLES

A. Conceal cables in finished walls, ceilings, and floors unless otherwise indicated.

B. Complete raceway installation between conductor and cable termination points according to Section 26 0533 "Raceways and Boxes for Electrical Systems" prior to pulling conductors and cables.

C. Use manufacturer-approved pulling compound or lubricant where necessary; compound used must not deteriorate conductor or insulation. Do not exceed manufacturer's recommended maximum pulling tensions and sidewall pressure values.

D. Use pulling means, including fish tape, cable, rope, and basket-weave wire/cable grips, that will not damage cables or raceway.

E. Install exposed cables parallel and perpendicular to surfaces of exposed structural members, and follow surface contours where possible.

F. Support cables according to Section 26 0529 "Hangers and Supports for Electrical Systems."

3.4 CONNECTIONS

A. Tighten electrical connectors and terminals according to manufacturer's published torque-tightening values. If manufacturer's torque values are not indicated, use those specified in UL 486A-486B.

B. Make splices, terminations, and taps that are compatible with conductor material and that possess equivalent or better mechanical strength and insulation ratings than unspliced conductors.

1. Use oxide inhibitor in each splice, termination, and tap for aluminum conductors.

2. Push-in style connectors are not allowed.

C. Wiring at Outlets: Install conductor at each outlet, with at least 6 inches of slack.

3.5 IDENTIFICATION

A. Identify and color-code conductors and cables according to Section 26 0553 "Identification for Electrical Systems."

B. Identify each spare conductor at each end with identity number and location of other end of conductor, and identify as spare conductor.

3.6 SLEEVE AND SLEEVE-SEAL INSTALLATION FOR ELECTRICAL PENETRATIONS

A. Install sleeves and sleeve seals at penetrations of exterior floor and wall assemblies. Comply with requirements in Section 26 0544 "Sleeves and Sleeve Seals for Electrical Raceways and Cabling."

3.7 FIRESTOPPING

A. Apply firestopping to electrical penetrations of fire-rated floor and wall assemblies to restore original fire-resistance rating of assembly according to Section 07 8413 "Penetration Firestopping."

3.8 FIELD QUALITY CONTROL

A. Testing Agency: Owner will engage a qualified testing agency to perform tests and inspections.

B. Testing Agency: Engage a qualified testing agency to perform tests and inspections.

C. Manufacturer's Field Service: Engage a factory-authorized service representative to test and inspect components, assemblies, and equipment installations, including connections.

D. Perform tests and inspections.

1. After installing conductors and cables and before electrical circuitry has been energized, test service entrance and feeder conductors for compliance with requirements.
2. After installing conductors and cables and before electrical circuitry has been energized, test service entrance and feeder conductors and conductors feeding critical equipment and services for compliance with requirements.

3. Perform each of the following visual and electrical tests:

    a. Inspect exposed sections of conductor and cable for physical damage and correct connection according to the single-line diagram.
    b. Test bolted connections for high resistance using one of the following:

        1) A low-resistance ohmmeter.
        2) Calibrated torque wrench.
        3) Thermographic survey.

c. Inspect compression-applied connectors for correct cable match and indentation.
d. Inspect for correct identification.
e. Inspect cable jacket and condition.
f. Insulation-resistance test on each conductor for ground and adjacent conductors. Apply a potential of 500-V dc for 300-V rated cable and 1000-V dc for 600-V rated cable for a one-minute duration.
g. Continuity test on each conductor and cable.
h. Uniform resistance of parallel conductors.

4. Initial Infrared Scanning: After Substantial Completion, but before Final Acceptance, perform an infrared scan of each splice in conductors No. 3 AWG and larger. Remove box and equipment covers so splices are accessible to portable scanner. Correct deficiencies determined during the scan.

   a. Instrument: Use an infrared scanning device designed to measure temperature or to detect significant deviations from normal values. Provide calibration record for device.
   b. Record of Infrared Scanning: Prepare a certified report that identifies switches checked and that describes scanning results. Include notation of deficiencies detected, remedial action taken, and observations after remedial action.

5. Follow-up Infrared Scanning: Perform an additional follow-up infrared scan of each switch 11 months after date of Substantial Completion.

E. Cables will be considered defective if they do not pass tests and inspections.

F. Prepare test and inspection reports to record the following:

1. Procedures used.
2. Results that comply with requirements.
3. Results that do not comply with requirements, and corrective action taken to achieve compliance with requirements.

END OF SECTION

SECTION 26 0526

GROUNDING AND BONDING FOR ELECTRICAL SYSTEMS

PART 1 - GENERAL

1.1 RELATED DOCUMENTS

A. Drawings and general provisions of the Contract, including General and Supplementary Conditions and Division 01 Specification Sections, apply to this Section.

1.2 SUMMARY

A. Section includes grounding and bonding systems and equipment.

B. Section includes grounding and bonding systems and equipment, plus the following special applications:

1. Underground distribution grounding.
2. Ground bonding common with lightning protection system.
3. Foundation steel electrodes.

1.3 ACTION SUBMITTALS

A. Product Data: For each type of product indicated.

1.4 INFORMATIONAL SUBMITTALS

A. Coordination Drawings: Plans showing dimensioned locations of grounding features specified in "Field Quality Control" Article, including the following:

1. Test wells.
2. Ground rods.
3. Ground rings.
4. Grounding arrangements and connections for separately derived systems.

B. Qualification Data: For testing agency and testing agency's field supervisor.

C. Field quality-control reports.

1.5 CLOSEOUT SUBMITTALS

A. Operation and Maintenance Data: For grounding to include in emergency, operation, and maintenance manuals.

1. In addition to items specified in Section 01 7823 "Operation and Maintenance Data," include the following:

a. Plans showing as-built, dimensioned locations of grounding features specified in "Field Quality Control" Article, including the following:

1) Test wells.
2) Ground rods.
3) Ground rings.
4) Grounding arrangements and connections for separately derived systems.

b. Instructions for periodic testing and inspection of grounding features at test wells, ground rings, and grounding connections for separately derived systems based on NETA MTS and NFPA 70B .

1) Tests shall determine if ground-resistance or impedance values remain within specified maximums, and instructions shall recommend corrective action if values do not.
2) Include recommended testing intervals.

1.6 QUALITY ASSURANCE

A. Testing Agency Qualifications: Certified by NETA.

PART 2 - PRODUCTS

2.1 SYSTEM DESCRIPTION

A. Electrical Components, Devices, and Accessories: Listed and labeled as defined in NFPA 70, by a qualified testing agency, and marked for intended location and application.

B. Comply with UL 467 for grounding and bonding materials and equipment.

2.2 CONDUCTORS

A. Insulated Conductors: Copper wire or cable insulated for 600 V unless otherwise required by applicable Code or authorities having jurisdiction.

B. Bare Copper Conductors:

1. Solid Conductors: ASTM B 3.
2. Stranded Conductors: ASTM B 8.
3. Tinned Conductors: ASTM B 33.
4. Bonding Cable: 28 kcmil, 14 strands of No. 17 AWG conductor, 1/4 inch in diameter.
5. Bonding Conductor: No. 4 or No. 6 AWG, stranded conductor.
6. Bonding Jumper: Copper tape, braided conductors terminated with copper ferrules; 1-5/8 inches wide and 1/16 inch thick.
7. Tinned Bonding Jumper: Tinned-copper tape, braided conductors terminated with copper ferrules; 1-5/8 inches wide and 1/16 inch thick.

C. Grounding Bus: Predrilled rectangular bars of annealed copper, 1/4 by 4 inches (unless noted otherwise on drawings) in cross section, with 9/32-inch holes spaced 1-1/8 inches apart. Stand-off insulators for mounting shall comply with UL 891 for use in switchboards, 600 V and shall be

Lexan or PVC, impulse tested at 5000 V.

1. Grounding bus bar shall be installed in each dedicated data equipment room/closet.
2. Install No. 6 AWG conductor connecting each grounding bus bar to the main service grounding distribution system.

2.3 CONNECTORS

A. Listed and labeled by an NRTL acceptable to authorities having jurisdiction for applications in which used and for specific types, sizes, and combinations of conductors and other items connected.

B. Welded Connectors: Exothermic-welding kits of types recommended by kit manufacturer for materials being joined and installation conditions.

C. Bus-Bar Connectors: Mechanical type, cast silicon bronze, solderless exothermic-type wire terminals, and long-barrel, two-bolt connection to ground bus bar.

D. Bus-Bar Connectors: Compression type, copper or copper alloy, with two wire terminals.

E. Beam Clamps: Mechanical type, terminal, ground wire access from four directions, with dual, tin-plated or silicon bronze bolts.

F. Cable-to-Cable Connectors: Compression type, copper or copper alloy.

G. Cable Tray Ground Clamp: Mechanical type, zinc-plated malleable iron.

H. Conduit Hubs: Mechanical type, terminal with threaded hub.

I. Ground Rod Clamps: Mechanical type, copper or copper alloy, terminal with hex head bolt.

J. Ground Rod Clamps: Mechanical type, copper or copper alloy, terminal with hex head bolt.

K. Lay-in Lug Connector: Mechanical type, copper rated for direct burial terminal with set screw.

L. Service Post Connectors: Mechanical type, bronze alloy terminal, in short- and long-stud lengths, capable of single and double conductor connections.

M. Signal Reference Grid Clamp: Mechanical type, stamped-steel terminal with hex head screw.

N. Straps: Solid copper, copper lugs. Rated for 600 A.

O. Tower Ground Clamps: Mechanical type, copper or copper alloy.

P. U-Bolt Clamps: Mechanical type, copper or copper alloy, terminal listed for direct burial.

Q. Water Pipe Clamps:

1. Mechanical type, two pieces with zinc-plated bolts.

    a. Material: Die-cast zinc alloy.
    b. Listed for direct burial.

2. U-bolt type with malleable-iron clamp and copper ground connector rated for direct burial.

2.4 GROUNDING ELECTRODES

A. Ground Rods: Copper-clad steel; 3/4 inch diameter by 10 feet in length.

B. Chemical-Enhanced Grounding Electrodes: Copper tube, straight or L-shaped, charged with nonhazardous electrolytic chemical salts.

1. Termination: Factory-attached No. 4/0 AWG bare conductor at least 48 inches long.
2. Backfill Material: Electrode manufacturer's recommended material.

C. Ground Plates: 1/4 inch thick, hot-dip galvanized.

PART 3 - EXECUTION

3.1 APPLICATIONS

A. Conductors: Install solid conductor for No. 8 AWG and smaller, and stranded conductors for No. 6 AWG and larger unless otherwise indicated.

B. Underground Grounding Conductors: Install bare tinned-copper conductor, No. 2/0 AWG minimum.

1. Bury at least 24 inches below grade.
2. Duct-Bank Grounding Conductor: Bury 12 inches above duct bank when indicated as part of duct-bank installation.

C. Isolated Grounding Conductors: Green-colored insulation with continuous yellow stripe. On feeders with isolated ground, identify grounding conductor where visible to normal inspection, with alternating bands of green and yellow tape, with at least three bands of green and two bands of yellow.

D. Grounding Bus: Install in electrical equipment rooms, in rooms housing service and low voltage data equipment and elsewhere as indicated.

1. Install bus horizontally, on insulated spacers 2 inches minimum from wall, 6 inches above finished floor unless otherwise indicated.
2. Where indicated on both sides of doorways, route bus up to top of door frame, across top of doorway, and down; connect to horizontal bus.

E. Conductor Terminations and Connections:

1. Pipe and Equipment Grounding Conductor Terminations: Bolted connectors.
2. Underground Connections: Welded connectors except at test wells and as otherwise indicated.
3. Connections to Ground Rods at Test Wells: Bolted connectors.
4. Connections to Structural Steel: Welded connectors.

3.2 GROUNDING AT THE SERVICE

A. Equipment grounding conductors and grounding electrode conductors shall be connected to the ground bus. Install a main bonding jumper between the neutral and ground buses.

3.3 GROUNDING SEPARATELY DERIVED SYSTEMS

A. Generator: Install grounding electrode(s) at the generator location. The electrode shall be connected to the equipment grounding conductor and to the frame of the generator.

3.4 GROUNDING UNDERGROUND DISTRIBUTION SYSTEM COMPONENTS

A. Comply with IEEE C2 grounding requirements.

B. Grounding Manholes and Handholes: Install a driven ground rod through manhole or handhole floor, close to wall, and set rod depth so 4 inches will extend above finished floor. If necessary, install ground rod before manhole is placed and provide No. 1/0 AWG bare, tinned-copper conductor from ground rod into manhole through a waterproof sleeve in manhole wall. Protect ground rods passing through concrete floor with a double wrapping of pressure-sensitive insulating tape or heat-shrunk insulating sleeve from 2 inches above to 6 inches below concrete. Seal floor opening with waterproof, nonshrink grout.

C. Grounding Connections to Manhole Components: Bond exposed-metal parts such as inserts, cable racks, pulling irons, ladders, and cable shields within each manhole or handhole, to ground rod or grounding conductor. Make connections with No. 4 AWG minimum, stranded, hard-drawn copper bonding conductor. Train conductors level or plumb around corners and fasten to manhole walls. Connect to cable armor and cable shields according to written instructions by manufacturer of splicing and termination kits.

D. Pad-Mounted Transformers and Switches: Install two ground rods and ground ring around the pad. Ground pad-mounted equipment and noncurrent-carrying metal items associated with substations by connecting them to underground cable and grounding electrodes. Install tinned-copper conductor not less than No. 2 AWG for ground ring and for taps to equipment grounding terminals. Bury ground ring not less than 6 inches from the foundation.

3.5 EQUIPMENT GROUNDING

A. Install insulated equipment grounding conductors with all feeders and branch circuits.

B. Install insulated equipment grounding conductors with the following items, in addition to those required by NFPA 70:

1. Feeders and branch circuits.
2. Lighting circuits.
3. Receptacle circuits.
4. Single-phase motor and appliance branch circuits.
5. Three-phase motor and appliance branch circuits.
6. Flexible raceway runs.
7. Armored and metal-clad cable runs.
8. Busway Supply Circuits: Install insulated equipment grounding conductor from grounding bus in the switchgear, switchboard, or distribution panel to equipment grounding bar terminal on busway.

C. Air-Duct Equipment Circuits: Install insulated equipment grounding conductor to duct-mounted electrical devices operating at 120 V and more, including air cleaners, heaters, dampers, humidifiers, and other duct electrical equipment. Bond conductor to each unit and to air duct and connected metallic piping.

D. Water Heater, Heat-Tracing, and Antifrost Heating Cables: Install a separate insulated equipment grounding conductor to each electric water heater and heat-tracing cable. Bond conductor to heater units, piping, connected equipment, and components.

E. Isolated Grounding Receptacle Circuits: Install an insulated equipment grounding conductor connected to the receptacle grounding terminal. Isolate conductor from raceway and from panelboard grounding terminals. Terminate at equipment grounding conductor terminal of the applicable derived system or service unless otherwise indicated.

F. Isolated Equipment Enclosure Circuits: For designated equipment supplied by a branch circuit or feeder, isolate equipment enclosure from supply circuit raceway with a nonmetallic raceway fitting listed for the purpose. Install fitting where raceway enters enclosure, and install a separate insulated equipment grounding conductor. Isolate conductor from raceway and from panelboard grounding terminals. Terminate at equipment grounding conductor terminal of the applicable derived system or service unless otherwise indicated.

G. Poles Supporting Outdoor Lighting Fixtures: Install grounding electrode and a separate insulated equipment grounding conductor in addition to grounding conductor installed with branch-circuit conductors.

H. Metallic Fences: Comply with requirements of IEEE C2.

1. Grounding Conductor: Bare copper, not less than No. 8 AWG.
2. Gates: Shall be bonded to the grounding conductor with a flexible bonding jumper.
3. Barbed Wire: Strands shall be bonded to the grounding conductor.

3.6 FENCE GROUNDING

A. Fence Grounding: Install at maximum intervals of 1500 feet except as follows:

1. Fences within 100 Feet of Buildings, Structures, Walkways, and Roadways: Ground at maximum intervals of 750 feet.

a. Gates and Other Fence Openings: Ground fence on each side of opening.

1) Bond metal gates to gate posts.
2) Bond across openings, with and without gates, except at openings indicated as intentional fence discontinuities. Use No. 2 AWG wire and bury it at least 18 inches below finished grade.

B. Protection at Crossings of Overhead Electrical Power Lines: Ground fence at location of crossing and at a maximum distance of 150 feet on each side of crossing.

C. Fences Enclosing Electrical Power Distribution Equipment: Ground as required by IEEE C2 unless otherwise indicated.

D. Grounding Method: At each grounding location, drive a grounding rod vertically until the top is 6 inches below finished grade. Connect rod to fence with No. 6 AWG conductor. Connect conductor to each fence component at grounding location.

E. Bonding Method for Gates: Connect bonding jumper between gate post and gate frame.

F. Bonding to Lightning-Protection System: If fence terminates at lightning-protected building or

structure, ground the fence and bond the fence grounding conductor to lightning-protection down conductor or lightning-protection grounding conductor, complying with NFPA 780.

3.7 INSTALLATION

A. Grounding Conductors: Route along shortest and straightest paths possible unless otherwise indicated or required by Code. Avoid obstructing access or placing conductors where they may be subjected to strain, impact, or damage.

B. Ground Bonding Common with Lightning Protection System: Comply with NFPA 780 and UL 96 when interconnecting with lightning protection system. Bond electrical power system ground directly to lightning protection system grounding conductor at closest point to electrical service grounding electrode. Use bonding conductor sized same as system grounding electrode conductor, and install in conduit.

C. Ground Rods: Drive rods until tops are 2 inches below finished floor or final grade unless otherwise indicated.

1. Interconnect ground rods with grounding electrode conductor below grade and as otherwise indicated. Make connections without exposing steel or damaging coating if any.
2. Use exothermic welds for all below-grade connections.
3. For grounding electrode system, install at least three rods spaced at least one-rod length from each other and located at least the same distance from other grounding electrodes, and connect to the service grounding electrode conductor.

D. Test Wells: Ground rod driven through drilled hole in bottom of handhole. Handholes are specified in Section 26 0543 "Underground Ducts and Raceways for Electrical Systems," and shall be at least 12 inches deep, with cover.

1. Install at least one test well for each service unless otherwise indicated. Install at the ground rod electrically closest to service entrance. Set top of test well flush with finished grade or floor.

E. Bonding Straps and Jumpers: Install in locations accessible for inspection and maintenance except where routed through short lengths of conduit.

1. Bonding to Structure: Bond straps directly to basic structure, taking care not to penetrate any adjacent parts.
2. Bonding to Equipment Mounted on Vibration Isolation Hangers and Supports: Install bonding so vibration is not transmitted to rigidly mounted equipment.
3. Use exothermic-welded connectors for outdoor locations; if a disconnect-type connection is required, use a bolted clamp.

F. Grounding and Bonding for Piping:

1. Metal Water Service Pipe: Install insulated copper grounding conductors, in conduit, from building's main service equipment, or grounding bus, to main metal water service entrances to building. Connect grounding conductors to main metal water service pipes; use a bolted clamp connector or bolt a lug-type connector to a pipe flange by using one of the lug bolts of the flange. Where a dielectric main water fitting is installed, connect grounding conductor on street side of fitting. Bond metal grounding conductor conduit or sleeve to conductor at each end.
2. Water Meter Piping: Use braided-type bonding jumpers to electrically bypass water meters. Connect to pipe with a bolted connector.

3. Bond each aboveground portion of gas piping system downstream from equipment shutoff valve.

G. Bonding Interior Metal Ducts: Bond metal air ducts to equipment grounding conductors of associated fans, blowers, electric heaters, and air cleaners. Install bonding jumper to bond across flexible duct connections to achieve continuity.

H. Grounding for Steel Building Structure: Install a driven ground rod at base of each corner column and at intermediate exterior columns at distances not more than 60 feet apart.

I. Ground Ring: Install a grounding conductor, electrically connected to each building structure ground rod and to each steel column, extending around the perimeter of building.

1. Install tinned-copper conductor not less than No. 2/0 AWG for ground ring and for taps to building steel.
2. Bury ground ring not less than 24 inches from building's foundation.

J. Concrete-Encased Grounding Electrode (Ufer Ground): Fabricate according to NFPA 70; use a minimum of 20 feet of bare copper conductor not smaller than No. 4 AWG.

1. If concrete foundation is less than 20 feet long, coil excess conductor within base of foundation.
2. Bond grounding conductor to reinforcing steel in at least four locations and to anchor bolts. Extend grounding conductor below grade and connect to building's grounding grid or to grounding electrode external to concrete.

K. Connections: Make connections so possibility of galvanic action or electrolysis is minimized. Select connectors, connection hardware, conductors, and connection methods so metals in direct contact are galvanically compatible.

1. Use electroplated or hot-tin-coated materials to ensure high conductivity and to make contact points closer in order of galvanic series.
2. Make connections with clean, bare metal at points of contact.
3. Make aluminum-to-steel connections with stainless-steel separators and mechanical clamps.
4. Make aluminum-to-galvanized-steel connections with tin-plated copper jumpers and mechanical clamps.
5. Coat and seal connections having dissimilar metals with inert material to prevent future penetration of moisture to contact surfaces.

3.8 FIELD QUALITY CONTROL

A. Testing Agency: Engage a qualified testing agency to perform tests and inspections.

B. Perform tests and inspections.

C. Tests and Inspections:

1. After installing grounding system but before permanent electrical circuits have been energized, test for compliance with requirements.
2. Inspect physical and mechanical condition. Verify tightness of accessible, bolted, electrical connections with a calibrated torque wrench according to manufacturer's written instructions.
3. Test completed grounding system at each location where a maximum ground-resistance

level is specified, at service disconnect enclosure grounding terminal, at ground test wells, and at individual ground rods. Make tests at ground rods before any conductors are connected.

a. Measure ground resistance no fewer than two full days after last trace of precipitation and without soil being moistened by any means other than natural drainage or seepage and without chemical treatment or other artificial means of reducing natural ground resistance.
b. Perform tests by fall-of-potential method according to IEEE 81.

4. Prepare dimensioned Drawings locating each test well, ground rod and ground-rod assembly, and other grounding electrodes. Identify each by letter in alphabetical order, and key to the record of tests and observations. Include the number of rods driven and their depth at each location, and include observations of weather and other phenomena that may affect test results. Describe measures taken to improve test results.

D. Grounding system will be considered defective if it does not pass tests and inspections.

E. Prepare test and inspection reports.

F. Report measured ground resistances that exceed the following values:

1. Power and Lighting Equipment or System with Capacity of 500 kVA and Less: 10 ohms.
2. Power and Lighting Equipment or System with Capacity of 500 to 1000 kVA: 5 ohms.
3. Power and Lighting Equipment or System with Capacity More Than 1000 kVA: 3 ohms.
4. Power Distribution Units or Panelboards Serving Electronic Equipment: 3 ohm(s).
5. Substations and Pad-Mounted Equipment: 5 ohms.
6. Manhole Grounds: 10 ohms.

G. Excessive Ground Resistance: If resistance to ground exceeds specified values, notify Architect promptly and include recommendations to reduce ground resistance.

END OF SECTION

SECTION 26 0529

HANGERS AND SUPPORTS FOR ELECTRICAL SYSTEMS

PART 1 - GENERAL

1.1 RELATED DOCUMENTS

A. Drawings and general provisions of the Contract, including General and Supplementary Conditions and Division 01 Specification Sections, apply to this Section.

1.2 SUMMARY

A. Section Includes:

1. Steel slotted support systems.
2. Aluminum slotted support systems.
3. Nonmetallic slotted support systems.
4. Conduit and cable support devices.
5. Support for conductors in vertical conduit.
6. Structural steel for fabricated supports and restraints.
7. Mounting, anchoring, and attachment components, including powder-actuated fasteners, mechanical expansion anchors, concrete inserts, clamps, through bolts, toggle bolts, and hanger rods.
8. Fabricated metal equipment support assemblies.

B. Related Requirements:

1. Section 26 0548.16 "Seismic Controls for Electrical Systems" for products and installation requirements necessary for compliance with seismic criteria.

1.3 ACTION SUBMITTALS

A. Product Data: For each type of product.

1. Include construction details, material descriptions, dimensions of individual components and profiles, and finishes for the following:

a. Slotted support systems, hardware, and accessories.
b. Clamps.
c. Hangers.
d. Sockets.
e. Eye nuts.
f. Fasteners.
g. Anchors.
h. Saddles.
i. Brackets.

2. Include rated capacities and furnished specialties and accessories.

1.4 INFORMATIONAL SUBMITTALS

A. Coordination Drawings: Reflected ceiling plan(s) and other details, drawn to scale, on which the following items are shown and coordinated with each other, using input from installers of the items involved:

1. Suspended ceiling components.
2. Ductwork, piping, fittings, and supports.
3. Structural members to which hangers and supports will be attached.
4. Size and location of initial access modules for acoustical tile.
5. Items penetrating finished ceiling, including the following:

    a. Luminaires.
    b. Air outlets and inlets.
    c. Speakers.
    d. Sprinklers.
    e. Access panels.
    f. Projectors.

B. Seismic Qualification Data: Certificates, for hangers and supports for electrical equipment and systems, accessories, and components, from manufacturer.

1. Basis for Certification: Indicate whether withstand certification is based on actual test of assembled components or on calculation.
2. Dimensioned Outline Drawings of Equipment Unit: Identify center of gravity and locate and describe mounting and anchorage provisions.
3. Detailed description of equipment anchorage devices on which the certification is based and their installation requirements.

C. Welding certificates.

1.5 QUALITY ASSURANCE

A. Welding Qualifications: Qualify procedures and personnel according to AWS D1.1/D1.1M.

B. Welding Qualifications: Qualify procedures and personnel according to the following:

1. AWS D1.1/D1.1M.
2. AWS D1.2/D1.2M.

PART 2 - PRODUCTS

2.1 PERFORMANCE REQUIREMENTS

A. Delegated Design: Engage a qualified professional engineer, as defined in Section 01 4000 "Quality Requirements," to design hanger and support system.

B. Surface-Burning Characteristics: Comply with ASTM E 84; testing by a qualified testing agency.

Identify products with appropriate markings of applicable testing agency.

1. Flame Rating: Class 1.
2. Self-extinguishing according to ASTM D 635.

2.2 SUPPORT, ANCHORAGE, AND ATTACHMENT COMPONENTS

A. Steel Slotted Support Systems: Preformed steel channels and angles with minimum 13/32-inch-diameter holes at a maximum of 8 inches o.c. in at least one surface.
   1. Standard: Comply with MFMA-4 factory-fabricated components for field assembly.
   2. Material for Channel, Fittings, and Accessories: Galvanized steel or Stainless steel, Type 316 as suitable for environment.
   3. Channel Width: As required for applicable load.
   4. Metallic Coatings: Hot-dip galvanized after fabrication and applied according to MFMA-4.
   5. Nonmetallic Coatings: Manufacturer's standard PVC, polyurethane, or polyester coating applied according to MFMA-4.
   6. Painted Coatings: Manufacturer's standard painted coating applied according to MFMA-4.
   7. Protect finishes on exposed surfaces from damage by applying a strippable, temporary protective covering before shipping.

B. Aluminum Slotted Support Systems: Extruded-aluminum channels and angles with minimum 13/32-inch-diameter holes at a maximum of 8 inches o.c. in at least one surface.
   1. Standard: Comply with MFMA-4 factory-fabricated components for field assembly.
   2. Channel Material: 6063-T5 aluminum alloy.
   3. Fittings and Accessories Material: 5052-H32 aluminum alloy.
   4. Channel Width: Selected for applicable load.
   5. Nonmetallic Coatings: Manufacturer's standard PVC, polyurethane, or polyester coating applied according to MFMA-4.
   6. Painted Coatings: Manufacturer's standard painted coating applied according to MFMA-4.
   7. Protect finishes on exposed surfaces from damage by applying a strippable, temporary protective covering before shipping.

C. Conduit and Cable Support Devices: Steel, Stainless-steel, aluminum hangers, clamps, and associated fittings, designed for types and sizes of raceway or cable to be supported.

D. Support for Conductors in Vertical Conduit: Factory-fabricated assembly consisting of threaded body and insulating wedging plug or plugs for nonarmored electrical conductors or cables in riser conduits. Plugs shall have number, size, and shape of conductor gripping pieces as required to suit individual conductors or cables supported. Body shall be made of malleable iron.

E. Structural Steel for Fabricated Supports and Restraints: ASTM A 36/A 36M steel plates, shapes, and bars; black and galvanized.

F. Mounting, Anchoring, and Attachment Components: Items for fastening electrical items or their supports to building surfaces include the following:

   1. Powder-Actuated Fasteners: Threaded-steel stud, for use in hardened portland cement concrete, steel, or wood, with tension, shear, and pullout capacities appropriate for supported loads and building materials where used.

   2. Mechanical-Expansion Anchors: Insert-wedge-type, stainless steel, for use in hardened

portland cement concrete, with tension, shear, and pullout capacities appropriate for supported loads and building materials where used.

3. Concrete Inserts: Steel or malleable-iron, slotted support system units are similar to MSS Type 18 units and comply with MFMA-4 or MSS SP-58.
4. Clamps for Attachment to Steel Structural Elements: MSS SP-58 units are suitable for attached structural element.
5. Through Bolts: Structural type, hex head, and high strength. Comply with ASTM A 325.
6. Hanger Rods: Threaded steel.

2.3 FABRICATED METAL EQUIPMENT SUPPORT ASSEMBLIES

A. Description: Welded or bolted structural-steel shapes, shop or field fabricated to fit dimensions of supported equipment.

B. Materials: Comply with requirements in Section 05 5000 "Metal Fabrications" for steel shapes and plates.

PART 3 - EXECUTION

3.1 APPLICATION

A. Comply with the following standards for application and installation requirements of hangers and supports, except where requirements on Drawings or in this Section are stricter:

1. NECA 1.
2. NECA 101
3. NECA 102.
4. NECA 105.
5. NECA 111.

B. Comply with requirements in Section 07 8413 "Penetration Firestopping" for firestopping materials and installation for penetrations through fire-rated walls, ceilings, and assemblies.

C. Comply with requirements for raceways and boxes specified in Section 26 0533 "Raceways and Boxes for Electrical Systems."

D. Maximum Support Spacing and Minimum Hanger Rod Size for Raceways: Space supports for EMT, IMC, and RMC as required by scheduled in NECA 1, where its Table 1 lists maximum spacings that are less than those stated in NFPA 70. Minimum rod size shall be 1/4 inch in diameter.

E. Multiple Raceways or Cables: Install trapeze-type supports fabricated with steel slotted or other support system, sized so capacity can be increased by at least 25 percent in future without exceeding specified design load limits.

1. Secure raceways and cables to these supports with single-bolt conduit clamps.

F. Spring-steel clamps designed for supporting single conduits without bolts may be used for 1-1/2-inch and smaller raceways serving branch circuits and communication systems above suspended ceilings, and for fastening raceways to trapeze supports.

3.2 SUPPORT INSTALLATION

A. Comply with NECA 1 and NECA 101 for installation requirements except as specified in this article.

B. Raceway Support Methods: In addition to methods described in NECA 1, EMT IMC and RMC may be supported by openings through structure members, according to NFPA 70.

C. Strength of Support Assemblies: Where not indicated, select sizes of components so strength will be adequate to carry present and future static loads within specified loading limits. Minimum static design load used for strength determination shall be weight of supported components plus 200 lb.

D. Mounting and Anchorage of Surface-Mounted Equipment and Components: Anchor and fasten electrical items and their supports to building structural elements by the following methods unless otherwise indicated by code:

1. To Wood: Fasten with lag screws or through bolts.
2. To New Concrete: Bolt to concrete inserts.
3. To Masonry: Approved toggle-type bolts on hollow masonry units and expansion anchor fasteners on solid masonry units.
4. To Existing Concrete: Expansion anchor fasteners.
5. Instead of expansion anchors, powder-actuated driven threaded studs provided with lock washers and nuts may be used in existing standard-weight concrete 4 inches thick or greater. Do not use for anchorage to lightweight-aggregate concrete or for slabs less than 4 inches thick.
6. To Steel: Beam clamps (MSS SP-58, Type 19, 21, 23, 25, or 27), complying with MSS SP-69 or Spring-tension clamps.
7. To Light Steel: Sheet metal screws.
8. Items Mounted on Hollow Walls and Nonstructural Building Surfaces: Mount cabinets, panelboards, disconnect switches, control enclosures, pull and junction boxes, transformers, and other devices on slotted-channel racks attached to substrate.

E. Drill holes for expansion anchors in concrete at locations and to depths that avoid the need for reinforcing bars.

3.3 INSTALLATION OF FABRICATED METAL SUPPORTS

A. Comply with installation requirements in Section 05 5000 "Metal Fabrications" for site-fabricated metal supports.

B. Cut, fit, and place miscellaneous metal supports accurately in location, alignment, and elevation to support and anchor electrical materials and equipment.

C. Field Welding: Comply with AWS D1.1/D1.1M.

3.4 CONCRETE BASES

A. Construct concrete bases of dimensions indicated, but not less than 4 inches larger in both directions than supported unit, and so anchors will be a minimum of 10 bolt diameters from edge of the base.

B. Unless required otherwise from manufacturer, transformer pads, pads for distribution equipment, and Generator pads shall have 6” clear minimum around the perimeter of the enclosure.

C. Use 3000-psi, 28-day compressive-strength concrete. Concrete materials, reinforcement, and placement requirements are specified in Section 03 3000 "Cast-in-Place Concrete." Section 03 3053 "Miscellaneous Cast-in-Place Concrete."

D. Anchor equipment to concrete base as follows:

1. Place and secure anchorage devices. Use supported equipment manufacturer's setting drawings, templates, diagrams, instructions, and directions furnished with items to be embedded.
2. Install anchor bolts to elevations required for proper attachment to supported equipment.
3. Install anchor bolts according to anchor-bolt manufacturer's written instructions.

3.5 PAINTING

A. Touchup: Clean field welds and abraded areas of shop paint. Paint exposed areas immediately after erecting hangers and supports. Use same materials as used for shop painting. Comply with SSPC-PA 1 requirements for touching up field-painted surfaces.

1. Apply paint by brush or spray to provide minimum dry film thickness of 2.0 mils.

B. Touchup: Comply with requirements in Section 09 9113 "Exterior Painting" Section 09 9123 "Interior Painting" and Section 09 9600 "High-Performance Coatings" for cleaning and touchup painting of field welds, bolted connections, and abraded areas of shop paint on miscellaneous metal.

C. Galvanized Surfaces: Clean welds, bolted connections, and abraded areas and apply galvanizing-repair paint to comply with ASTM A 780.

END OF SECTION

SECTION 26 0533

RACEWAYS AND BOXES FOR ELECTRICAL SYSTEMS

PART 1 - GENERAL

1.1 RELATED DOCUMENTS

A. Drawings and general provisions of the Contract, including General and Supplementary Conditions and Division 01 Specification Sections, apply to this Section.

1.2 SUMMARY

A. Section Includes:

1. Metal conduits and fittings.
2. Nonmetallic conduits and fittings.
3. Metal wireways and auxiliary gutters.
4. Nonmetal wireways and auxiliary gutters.
5. Surface raceways.
6. Boxes, enclosures, and cabinets.
7. Handholes and boxes for exterior underground cabling.

1.3 DEFINITIONS

A. ARC: Aluminum rigid conduit.

B. GRC: Galvanized rigid steel conduit.

C. IMC: Intermediate metal conduit.

1.4 ACTION SUBMITTALS

A. Product Data: For surface raceways, wireways and fittings, floor boxes, hinged-cover enclosures, and cabinets.

B. Shop Drawings: For custom enclosures and cabinets. Include plans, elevations, sections, and attachment details.

1.5 INFORMATIONAL SUBMITTALS

A. Coordination Drawings: Conduit routing plans, drawn to scale, on which the following items are shown and coordinated with each other, using input from installers of items involved:

1. Structural members in paths of conduit groups with common supports.
2. HVAC and plumbing items and architectural features in paths of conduit groups with common supports.

B. Qualification Data: For professional engineer.

C. Seismic Qualification Data: Certificates, for enclosures, cabinets, and conduit racks and their mounting provisions, including those for internal components, from manufacturer.

1. Basis for Certification: Indicate whether withstand certification is based on actual test of assembled components or on calculation.
2. Dimensioned Outline Drawings of Equipment Unit: Identify center of gravity and locate and describe mounting and anchorage provisions.
3. Detailed description of equipment anchorage devices on which the certification is based and their installation requirements.
4. Detailed description of conduit support devices and interconnections on which the certification is based and their installation requirements.

D. Source quality-control reports.

PART 2 - PRODUCTS

2.1 METAL CONDUITS AND FITTINGS

A. Metal Conduit:
1. Listing and Labeling: Listed and labeled as defined in NFPA 70, by a qualified testing agency, and marked for intended location and application.
2. GRC: Comply with ANSI C80.1 and UL 6.
3. ARC: Comply with ANSI C80.5 and UL 6A.
4. IMC: Comply with ANSI C80.6 and UL 1242.
5. PVC-Coated Steel Conduit: PVC-coated rigid steel conduit.

a. Comply with NEMA RN 1.
b. Coating Thickness: 0.040 inch, minimum.

6. EMT: Comply with ANSI C80.3 and UL 797.
7. FMC: Comply with UL 1; zinc-coated steel or aluminum.
8. LFMC: Flexible steel conduit with PVC jacket and complying with UL 360.

B. Metal Fittings:
1. Comply with NEMA FB 1 and UL 514B.
2. Listing and Labeling: Listed and labeled as defined in NFPA 70, by a qualified testing agency, and marked for intended location and application.
3. Fittings, General: Listed and labeled for type of conduit, location, and use.
4. Conduit Fittings for Hazardous (Classified) Locations: Comply with UL 1203 and NFPA 70.
5. Fittings for EMT:

a. Material: Steel.
b. Type: compression.

6. Expansion Fittings: PVC or steel to match conduit type, complying with UL 651, rated for environmental conditions where installed, and including flexible external bonding jumper.
7. Coating for Fittings for PVC-Coated Conduit: Minimum thickness of 0.040 inch, with overlapping sleeves protecting threaded joints.

C. Joint Compound for IMC, GRC, or ARC: Approved, as defined in NFPA 70, by authorities

having jurisdiction for use in conduit assemblies, and compounded for use to lubricate and protect threaded conduit joints from corrosion and to enhance their conductivity.

2.2 NONMETALLIC CONDUITS AND FITTINGS

A. Nonmetallic Conduit:
   1. Listing and Labeling: Nonmetallic conduit shall be listed and labeled as defined in NFPA 70, by a qualified testing agency, and marked for intended location and application.
   2. Fiberglass:
      a. Comply with NEMA TC 14.
      b. Comply with UL 2515 for aboveground raceways.
      c. Comply with UL 2420 for belowground raceways.
   3. ENT: Comply with NEMA TC 13 and UL 1653.
   4. RNC: Type EPC-40-PVC, complying with NEMA TC 2 and UL 651 unless otherwise indicated.
   5. LFNC: Comply with UL 1660.
   6. Rigid HDPE: Comply with UL 651A.
   7. Continuous HDPE: Comply with UL 651A.
   8. Coilable HDPE: Preassembled with conductors or cables, and complying with ASTM D 3485.
   9. RTRC: Comply with UL 2515A and NEMA TC 14.

B. Nonmetallic Fittings:
   1. Fittings, General: Listed and labeled for type of conduit, location, and use.
   2. Fittings for ENT and RNC: Comply with NEMA TC 3; match to conduit or tubing type and material.
      a. Fittings for LFNC: Comply with UL 514B.
   3. Solvents and Adhesives: As recommended by conduit manufacturer.

2.3 METAL WIREWAYS AND AUXILIARY GUTTERS

A. Description: Sheet metal, complying with UL 870 and NEMA 250, (enclosure suitable to environment) unless otherwise indicated, and sized according to NFPA 70.
   1. Metal wireways installed outdoors shall be listed and labeled as defined in NFPA 70, by a qualified testing agency, and marked for intended location and application.

B. Fittings and Accessories: Include covers, couplings, offsets, elbows, expansion joints, adapters, hold-down straps, end caps, and other fittings to match and mate with wireways as required for complete system.

C. Wireway Covers: Hinged, Flanged-and-gasketed type unless otherwise indicated.

D. Finish: Manufacturer's standard enamel finish.

2.4 NONMETALLIC WIREWAYS AND AUXILIARY GUTTERS

A. Listing and Labeling: Nonmetallic wireways and auxiliary gutters shall be listed and labeled as defined in NFPA 70, by a qualified testing agency, and marked for intended location and application.

B. Description: Fiberglass polyester, extruded and fabricated to required size and shape, without holes or knockouts. Cover shall be gasketed with oil-resistant gasket material and fastened with captive screws treated for corrosion resistance. Connections shall be flanged and have stainless-steel screws and oil-resistant gaskets.

C. Description: PVC, extruded and fabricated to required size and shape, and having snap-on cover, mechanically coupled connections, and plastic fasteners.

D. Fittings and Accessories: Couplings, offsets, elbows, expansion joints, adapters, hold-down straps, end caps, and other fittings shall match and mate with wireways as required for complete system.

E. Solvents and Adhesives: As recommended by conduit manufacturer.

2.5 SURFACE RACEWAYS

A. Listing and Labeling: Surface raceways and tele-power poles shall be listed and labeled as defined in NFPA 70, by a qualified testing agency, and marked for intended location and application.

B. Surface Metal Raceways: Galvanized steel with snap-on covers complying with UL 5. Manufacturer's standard enamel finish in color selected by Architect unless otherwise indicated.

C. Surface Nonmetallic Raceways: not allowed unless noted otherwise.

2.6 BOXES, ENCLOSURES, AND CABINETS

A. General Requirements for Boxes, Enclosures, and Cabinets: Boxes, enclosures, and cabinets installed in wet locations shall be listed for use in wet locations.

B. Sheet Metal Outlet and Device Boxes: Comply with NEMA OS 1 and UL 514A.

C. Cast-Metal Outlet and Device Boxes: Comply with NEMA FB 1, aluminum, Type FD, with gasketed cover.

D. Nonmetallic Outlet and Device Boxes: Comply with NEMA OS 2 and UL 514C.

E. Metal Floor Boxes: refer to drawings.

F. Nonmetallic Floor Boxes: refer to drawings

G. Luminaire Outlet Boxes: Nonadjustable, designed for attachment of luminaire weighing 50 lb. Outlet boxes designed for attachment of luminaires weighing more than 50 lb shall be listed and marked for the maximum allowable weight.

H. Paddle Fan Outlet Boxes: Nonadjustable, designed for attachment of paddle fan weighing 90 lb.

1. Listing and Labeling: Paddle fan outlet boxes shall be listed and labeled as defined in NFPA 70, by a qualified testing agency, and marked for intended location and application.

I. Small Sheet Metal Pull and Junction Boxes: NEMA OS 1.

J. Cast-Metal Access, Pull, and Junction Boxes: Comply with NEMA FB 1 and UL 1773, cast aluminum or galvanized, cast iron (suitable to environment) with gasketed cover.

K. Box extensions used to accommodate new building finishes shall be of same material as recessed box.

L. Device Box Dimensions: 4 inches square by 2-1/8 inches deep.

M. Gangable boxes are allowed.

N. Hinged-Cover Enclosures: Comply with UL 50 and NEMA 250, NEMA enclosure type suitable to environment with continuous-hinge cover with flush latch unless otherwise indicated.

1. Metal Enclosures: Steel, finished inside and out with manufacturer's standard enamel.
2. Nonmetallic Enclosures: Fiberglass.
3. Interior Panels: Steel; all sides finished with manufacturer's standard enamel.

O. Cabinets:

1. NEMA 250, NEMA enclosure suitable to environment, galvanized-steel box with removable interior panel and removable front, finished inside and out with manufacturer's standard enamel.
2. Hinged door in front cover with flush latch and concealed hinge.
3. Key latch to match panelboards.
4. Metal barriers to separate wiring of different systems and voltage.
5. Accessory feet where required for freestanding equipment.
6. Nonmetallic cabinets shall be listed and labeled as defined in NFPA 70, by a qualified testing agency, and marked for intended location and application.

2.7 HANDHOLES AND BOXES FOR EXTERIOR UNDERGROUND WIRING

A. General Requirements for Handholes and Boxes:

1. Boxes and handholes for use in underground systems shall be designed and identified as defined in NFPA 70, for intended location and application.
2. Boxes installed in wet areas shall be listed and labeled as defined in NFPA 70, by a qualified testing agency, and marked for intended location and application.

B. Polymer-Concrete Handholes and Boxes with Polymer-Concrete Cover: Molded of sand and aggregate, bound together with polymer resin, and reinforced with steel, fiberglass, or a combination of the two.
1. Standard: Comply with SCTE 77.
2. Configuration: Designed for flush burial with open bottom unless otherwise indicated.
3. Cover: Weatherproof, secured by tamper-resistant locking devices and having structural load rating consistent with enclosure and handhole location.
4. Cover Finish: Nonskid finish shall have a minimum coefficient of friction of 0.50.
5. Cover Legend: Molded lettering, "ELECTRIC.".
6. Conduit Entrance Provisions: Conduit-terminating fittings shall mate with entering ducts

for secure, fixed installation in enclosure wall.
7. Handholes 12 Inches Wide by 24 Inches Long and Larger: Have inserts for cable racks and pulling-in irons installed before concrete is poured.

C. Fiberglass Handholes and Boxes: Molded of fiberglass-reinforced polyester resin, with frame and covers of reinforced concrete.
1. Standard: Comply with SCTE 77.
2. Color of Frame and Cover: Gray.
3. Configuration: Designed for flush burial with open bottom unless otherwise indicated.
4. Cover: Weatherproof, secured by tamper-resistant locking devices and having structural load rating consistent with enclosure and handhole location.
5. Cover Finish: Nonskid finish shall have a minimum coefficient of friction of 0.50.
6. Cover Legend: Molded lettering, "ELECTRIC.".
7. Conduit Entrance Provisions: Conduit-terminating fittings shall mate with entering ducts for secure, fixed installation in enclosure wall.
8. Handholes 12 Inches Wide by 24 Inches Long and Larger: Have inserts for cable racks and pulling-in irons installed before concrete is poured.

2.8 SOURCE QUALITY CONTROL FOR UNDERGROUND ENCLOSURES

A. Handhole and Pull-Box Prototype Test: Test prototypes of handholes and boxes for compliance with SCTE 77. Strength tests shall be for specified tier ratings of products supplied.

1. Tests of materials shall be performed by an independent testing agency.
2. Strength tests of complete boxes and covers shall be by either an independent testing agency or manufacturer. A qualified registered professional engineer shall certify tests by manufacturer.
3. Testing machine pressure gages shall have current calibration certification complying with ISO 9000 and ISO 10012 and traceable to NIST standards.

PART 3 - EXECUTION

3.1 RACEWAY APPLICATION

A. Outdoors: Apply raceway products as specified below unless otherwise indicated:

1. Exposed Conduit: GRC.
2. Concealed Conduit, Aboveground: EMT.
3. Underground Conduit: RNC, Type EPC-80-PVC, direct buried.
4. Connection to Vibrating Equipment (Including Transformers and Hydraulic, Pneumatic, Electric Solenoid, or Motor-Driven Equipment): LFMC.
5. Boxes and Enclosures, Aboveground: NEMA 250, Type 4.
6. Feeders to Variable Speed Drive: Metallic (EMT or GRC)

B. Indoors: Apply raceway products as specified below unless otherwise indicated:

1. Exposed, Not Subject to Physical Damage: EMT.
2. Exposed, Not Subject to Severe Physical Damage: EMT unless noted otherwise.
3. Exposed and Subject to Severe Physical Damage: GRC. Raceway locations include the following:

a. Loading dock.

b. Corridors used for traffic of mechanized carts, forklifts, and pallet-handling units.
c. Mechanical rooms.
d. Gymnasiums.

4. Concealed in Ceilings and Interior Walls and Partitions: EMT.
5. Connection to Vibrating Equipment (Including Transformers and Hydraulic, Pneumatic, Electric Solenoid, or Motor-Driven Equipment): FMC, except use LFMC in damp or wet locations.
6. Damp or Wet Locations: GRC.
7. Boxes and Enclosures: NEMA 250, Type 1, except use NEMA 250, Type 4 stainless steel in institutional and commercial kitchens and damp or wet locations.
8. Feeders to Variable Speed Drive: Metallic (EMT or GRC)

C. Minimum Raceway Size: 1/2-inch trade size. 3/4-inch minimum for school and healthcare facilities.

D. Raceway Fittings: Compatible with raceways and suitable for use and location.

1. Rigid and Intermediate Steel Conduit: Use threaded rigid steel conduit fittings unless otherwise indicated. Comply with NEMA FB 2.10.
2. PVC Externally Coated, Rigid Steel Conduits: Use only fittings listed for use with this type of conduit. Patch and seal all joints, nicks, and scrapes in PVC coating after installing conduits and fittings. Use sealant recommended by fitting manufacturer and apply in thickness and number of coats recommended by manufacturer.
3. EMT: Use compression, steel fittings. Comply with NEMA FB 2.10.
4. Flexible Conduit: Use only fittings listed for use with flexible conduit. Comply with NEMA FB 2.20.

E. Install nonferrous conduit or tubing for circuits operating above 60 Hz. Where aluminum raceways are installed for such circuits and pass through concrete, install in nonmetallic sleeve.

F. Do not install aluminum conduits, boxes, or fittings in contact with concrete or earth.

G. Install surface raceways only where indicated on Drawings.

H. Do not install nonmetallic conduit where ambient temperature exceeds 120 deg F.

3.2 INSTALLATION

A. Comply with NECA 1 and NECA 101 for installation requirements except where requirements on Drawings or in this article are stricter. Comply with NECA 102 for aluminum conduits. Comply with NFPA 70 limitations for types of raceways allowed in specific occupancies and number of floors.

B. Keep raceways at least 6 inches away from parallel runs of flues and steam or hot-water pipes. Install horizontal raceway runs above water and steam piping.

C. Complete raceway installation before starting conductor installation.

D. Comply with requirements in Section 26 0529 "Hangers and Supports for Electrical Systems" for hangers and supports.

E. Arrange stub-ups so curved portions of bends are not visible above finished slab.

F. Install no more than the equivalent of three 90-degree bends in any conduit run except for control wiring conduits, for which fewer bends are allowed. Support within 12 inches of changes in direction.

G. Conceal conduit and EMT within finished walls, ceilings, and floors unless otherwise indicated. Install conduits parallel or perpendicular to building lines.

H. Support conduit within 12 inches of enclosures to which attached.

I. Raceways Embedded in Slabs:

1. Run conduit larger than 1-inch trade size, parallel or at right angles to main reinforcement. Where at right angles to reinforcement, place conduit close to slab support. Secure raceways to reinforcement at maximum 10-footintervals.
2. Arrange raceways to cross building expansion joints at right angles with expansion fittings.
3. Arrange raceways to keep a minimum of 1 inch of concrete cover in all directions.
4. Do not embed threadless fittings in concrete unless specifically approved by Architect for each specific location.
5. Change from ENT to GRC before rising above floor. Elbows shall be GRC. Continue GRC until conduit passes through the slab prior to transition back to ENT.
6. Provide coated GRC for all bends greater than 30 degrees, including the 90-degree elbows below grade and the entire vertical risers for transitions from below to above grade or above-slab."

J. Stub-ups to Above Recessed Ceilings:

1. Use EMT, IMC, or RMC for raceways.
2. Use a conduit bushing or insulated fitting to terminate stub-ups not terminated in hubs or in an enclosure.

K. Threaded Conduit Joints, Exposed to Wet, Damp, Corrosive, or Outdoor Conditions: Apply listed compound to threads of raceway and fittings before making up joints. Follow compound manufacturer's written instructions.

L. Coat field-cut threads on PVC-coated raceway with a corrosion-preventing conductive compound prior to assembly.

M. Raceway Terminations at Locations Subject to Moisture or Vibration: Use insulating bushings to protect conductors including conductors smaller than No. 4 AWG.

N. Terminate threaded conduits into threaded hubs or with locknuts on inside and outside of boxes or cabinets. Install bushings on conduits up to 1-1/4-inch trade size and insulated throat metal bushings on 1-1/2-inch trade size and larger conduits terminated with locknuts. Install insulated throat metal grounding bushings on service conduits.

O. Install raceways square to the enclosure and terminate at enclosures with locknuts. Install locknuts hand tight plus 1/4 turn more.

P. Do not rely on locknuts to penetrate nonconductive coatings on enclosures. Remove coatings in the locknut area prior to assembling conduit to enclosure to assure a continuous ground path.

Q. Cut conduit perpendicular to the length. For conduits 2-inch trade size and larger, use roll cutter or a guide to make cut straight and perpendicular to the length.

R. Install pull wires in empty raceways. Use polypropylene or monofilament plastic line with not less than 200-lb tensile strength. Leave at least 12 inches of slack at each end of pull wire. Cap underground raceways designated as spare above grade alongside raceways in use.

S. Surface Raceways:

1. Install surface raceway with a minimum 2-inchradius control at bend points.
2. Secure surface raceway with screws or other anchor-type devices at intervals not exceeding 48 inches and with no less than two supports per straight raceway section. Support surface raceway according to manufacturer's written instructions. Tape and glue are not acceptable support methods.

T. Install raceway sealing fittings at accessible locations according to NFPA 70 and fill them with listed sealing compound. For concealed raceways, install each fitting in a flush steel box with a blank cover plate having a finish similar to that of adjacent plates or surfaces. Install raceway sealing fittings according to NFPA 70.

U. Install devices to seal raceway interiors at accessible locations. Locate seals so no fittings or boxes are between the seal and the following changes of environments. Seal the interior of all raceways at the following points:

1. Where conduits pass from warm to cold locations, such as boundaries of refrigerated spaces.
2. Where an underground service raceway enters a building or structure.
3. Where otherwise required by NFPA 70.

V. Comply with manufacturer's written instructions for solvent welding RNC and fittings.

W. Expansion-Joint Fittings:

1. Install in each run of aboveground RNC that is located where environmental temperature change may exceed 30 deg F and that has straight-run length that exceeds 25 feet. Install in each run of aboveground RMC and EMT conduit that is located where environmental temperature change may exceed 100 deg F and that has straight-run length that exceeds 100 feet.
2. Install type and quantity of fittings that accommodate temperature change listed for each of the following locations:

    a. Outdoor Locations Not Exposed to Direct Sunlight: 125 deg F temperature change.
    b. Outdoor Locations Exposed to Direct Sunlight: 155 deg F temperature change.
    c. Indoor Spaces Connected with Outdoors without Physical Separation: 125 deg F temperature change.
    d. Attics: 135 deg F temperature change.

3. Install fitting(s) that provide expansion and contraction for at least 0.00041 inch per foot of length of straight run per deg F of temperature change for PVC conduits. Install fitting(s) that provide expansion and contraction for at least 0.000078 inch per foot of length of straight run per deg F of temperature change for metal conduits.
4. Install expansion fittings at all locations where conduits cross building or structure expansion joints.
5. Install each expansion-joint fitting with position, mounting, and piston setting selected according to manufacturer's written instructions for conditions at specific location at time of installation. Install conduit supports to allow for expansion movement.

X. Flexible Conduit Connections: Comply with NEMA RV 3. Use a maximum of 72 inches of flexible conduit for recessed and semirecessed luminaires, equipment subject to vibration, noise transmission, or movement; and for transformers and motors.

1. Use LFMC in damp or wet locations subject to severe physical damage.
2. Use LFMC or LFNC in damp or wet locations not subject to severe physical damage.

Y. Mount boxes at heights indicated on Drawings. If mounting heights of boxes are not individually indicated, give priority to ADA requirements. Install boxes with height measured to center of box unless otherwise indicated.

Z. Surface mount boxes at window mullions at locations indicated on drawings. Use of MC cable is acceptable. Conceal raceways and conductors within mullion cavity. Splices within the mullions are not allowed.

AA. Recessed Boxes in Masonry Walls: Saw-cut opening for box in center of cell of masonry block, and install box flush with surface of wall. Prepare block surfaces to provide a flat surface for a raintight connection between box and cover plate or supported equipment and box.

BB. Horizontally separate boxes mounted on opposite sides of walls so they are not in the same vertical channel.

CC. Locate boxes so that cover or plate will not span different building finishes.

DD. Support boxes of three gangs or more from more than one side by spanning two framing members or mounting on brackets specifically designed for the purpose.

EE. Fasten junction and pull boxes to or support from building structure. Do not support boxes by conduits.

FF. Set metal floor boxes level and flush with finished floor surface.

GG. Set nonmetallic floor boxes level. Trim after installation to fit flush with finished floor surface.

3.3 INSTALLATION OF UNDERGROUND CONDUIT

A. Direct-Buried Conduit:

1. Excavate trench bottom to provide firm and uniform support for conduit. Prepare trench bottom as specified in Section 31 2000 "Earth Moving" for pipe less than 6 inches in nominal diameter.
2. Install backfill as specified in Section 31 2000 "Earth Moving."
3. After installing conduit, backfill and compact. Start at tie-in point, and work toward end of conduit run, leaving conduit at end of run free to move with expansion and contraction as temperature changes during this process. Firmly hand tamp backfill around conduit to provide maximum supporting strength. After placing controlled backfill to within 12 inches of finished grade, make final conduit connection at end of run and complete backfilling with normal compaction as specified in Section 31 2000 "Earth Moving."
4. Install manufactured duct elbows for stub-ups at poles and equipment and at building entrances through floor unless otherwise indicated. Encase elbows for stub-up ducts throughout length of elbow.
5. Install manufactured rigid steel conduit elbows for stub-ups at poles and equipment and at building entrances through floor.

a. Couple steel conduits to ducts with adapters designed for this purpose, and encase coupling with 3 inches of concrete for a minimum of 12 inches on each side of the coupling.
b. For stub-ups at equipment mounted on outdoor concrete bases and where conduits penetrate building foundations, extend steel conduit horizontally a minimum of 60 inches from edge of foundation or equipment base. Install insulated grounding bushings on terminations at equipment.

6. Warning Planks: Bury warning planks approximately 12 inches above direct-buried conduits but a minimum of 6 inches below grade. Align planks along centerline of conduit.
7. Underground Warning Tape: Comply with requirements in Section 26 0553 "Identification for Electrical Systems."

3.4 INSTALLATION OF UNDERGROUND HANDHOLES AND BOXES

A. Install handholes and boxes level and plumb and with orientation and depth coordinated with connecting conduits to minimize bends and deflections required for proper entrances.

B. Unless otherwise indicated, support units on a level bed of crushed stone or gravel, graded from 1/2-inch sieve to No. 4 sieve and compacted to same density as adjacent undisturbed earth.

C. Elevation: In paved areas, set so cover surface will be flush with finished grade. Set covers of other enclosures 1 inch above finished grade.

D. Install handholes with bottom below frost line, below grade.

E. Install removable hardware, including pulling eyes, cable stanchions, cable arms, and insulators, as required for installation and support of cables and conductors and as indicated. Select arm lengths to be long enough to provide spare space for future cables but short enough to preserve adequate working clearances in enclosure.

F. Field-cut openings for conduits according to enclosure manufacturer's written instructions. Cut wall of enclosure with a tool designed for material to be cut. Size holes for terminating fittings to be used, and seal around penetrations after fittings are installed.

3.5 SLEEVE AND SLEEVE-SEAL INSTALLATION FOR ELECTRICAL PENETRATIONS

A. Install sleeves and sleeve seals at penetrations of exterior floor and wall assemblies. Comply with requirements in Section 26 0544 "Sleeves and Sleeve Seals for Electrical Raceways and Cabling."

3.6 FIRESTOPPING

A. Install firestopping at penetrations of fire-rated floor and wall assemblies. Comply with requirements in Section 07 8413 "Penetration Firestopping."

3.7 PROTECTION

A. Protect coatings, finishes, and cabinets from damage and deterioration.

1. Repair damage to galvanized finishes with zinc-rich paint recommended by manufacturer.
2. Repair damage to PVC coatings or paint finishes with matching touchup coating recommended by manufacturer.

END OF SECTION

SECTION 26 0539

UNDERFLOOR RACEWAYS FOR ELECTRICAL SYSTEMS

PART 1 - GENERAL

1.1 RELATED DOCUMENTS

A. Drawings and general provisions of the Contract, including General and Supplementary Conditions and Division 01 Specification Sections, apply to this Section.

1.2 SUMMARY

A. Section Includes:

1. Flat-top, single- or multichannel, underfloor raceways.
2. Flush, flat-top underfloor raceways.
3. Cellular metal underfloor raceways.
4. Trench-type underfloor raceways.
5. Electrical connection components for precast cellular concrete floor decks.
6. Electrical connection components for electrified cellular steel floor decks.
7. Supports, raceway fittings, and hardware.
8. Junction boxes.
9. Service fittings.

B. Related Requirements:

1. Section 03 4100 "Precast Structural Concrete" for precast concrete units used as cellular concrete floor raceways.
2. Section 05 3100 "Steel Decking" for rough-in of underfloor duct distribution system.

1.3 DEFINITIONS

A. Activation: Nomenclature used by some manufacturers for a service fitting.

1.4 ACTION SUBMITTALS

A. Product Data: For each type of product.

1. Include finishes, construction details, material descriptions, dimensions, and profiles for underfloor raceway components, fittings, and accessories.
2. Include rated capacities, operating characteristics, electrical characteristics, and furnished specialties and accessories.

B. Shop Drawings: For underfloor raceways.

1. Include floor plans, elevations, sections, and details.
2. Detail fabrication and assembly of underfloor raceways.

a. Identify components and accessories, such as expansion-joint assemblies, straight raceway lengths, preset and afterset inserts, and service fittings.
b. Detail preparation and installation methods and instructions.
c. Provide dimensions locating raceway header and distribution elements. Include spacing between preset inserts and between preset inserts and ends of duct runs, walls, columns, junction boxes, and header duct connections.
d. Provide raceway fill charts for each duct size provided for each conductor size the duct is identified to accept. Provide separate charts for power and communication conductors and cables.
e. Show connections between raceway elements and relationships between components and adjacent structural and architectural elements, including slab reinforcement, floor finish work, permanent partitions, expansion joints, and pretensioning or post-tensioning components.
f. Indicate height of preset inserts, junction boxes, and raceways coordinated with depth of concrete slab and floor fill.
g. Indicate thickening of slabs where required for adequate encasement of raceway components.
h. Document coordination of exposed components with floor-covering materials to ensure that fittings and trim are suitable for indicated floor-covering material.
i. Revise locations from those indicated in the Contract Documents, as required to suit field conditions and to ensure a functioning layout. Identify proposed deviations from the Contract Documents.
j. Show details of connections and terminations of underfloor raceways at panelboards and communication terminal equipment in equipment rooms, wire closets, and similar spaces.
k. Identify those cells of cellular floor deck that are to be connected and fitted for the following underfloor distribution:

1) Power.
2) Voice.
3) Data.
4) Signal.
5) Communications.

C. Samples: For each underfloor raceway product, in specified finish, including the following:

1. Service fittings and flush and recessed outlet and junction-box covers.
2. A section of each service raceway configuration, with specified preset insert and service fitting installed.
3. A junction box of each size and type for use with underfloor raceway.
4. A section of each header raceway configuration, complete with provisions for connection with service raceway.
5. A section of trench-type raceway, complete with cover and required trim.
6. A junction box of each size and type for use with trench-type raceway, complete with cover and trim.

1.5 INFORMATIONAL SUBMITTALS

A. Field quality-control reports.

1.6 CLOSEOUT SUBMITTALS

A. Operation and Maintenance Data: For underfloor raceways, to include in emergency, operation,

and maintenance manuals.

1. In addition to items specified in Section 01 7823 "Operation and Maintenance Data," include the following:

    a. Manufacturer's written instructions for locating preset inserts and for installing afterset inserts.

B. Project Record Documents: Submit final as-built Drawings, indicating dimensioned locations for all ducts, junction boxes, and preset inserts. Typical spacing designation shall be accepted only for preset insert spacing along a continuous length of duct.

1.7 QUALITY ASSURANCE

A. Testing Agency Qualifications: Member company of NETA or an NRTL.

1. Testing Agency's Field Supervisor: Currently certified by NETA to supervise on-site testing.

B. Comply with UL 884.

C. Comply with NFPA 70.

D. Mockup: Install a mockup for evaluation of surface preparation and duct installation techniques and workmanship.

1. Mockup area shall be designated by Architect.
2. Do not proceed with remaining work until workmanship, appearance, and performance are approved.
3. Repair or reinstall mockup area as required to produce acceptable work.
4. Approval of mockups does not constitute approval of deviations from the Contract Documents contained in mockups unless Architect specifically approves such deviations in writing.
5. Subject to compliance with requirements, approved mockups may become part of the completed Work if undisturbed at time of Substantial Completion.

PART 2 - PRODUCTS

2.1 SYSTEM DESCRIPTION

A. Electrical Components, Devices, and Accessories: Listed and labeled as defined in NFPA 70, by a qualified testing agency, and marked for intended location and application.

B. Jacks, Receptacles, and Fittings:

1. Comply with Section 26 2726 "Wiring Devices" for power outlets, faceplates, and connectors.
2. Comply with Division 27 Specifications for twisted pair jacks, outlets, assemblies, and faceplates.
3. Comply with Division 27 Specifications for optical fiber jacks, outlets, assemblies, and faceplates.

4. Comply with Division 27 Specifications for coaxial jacks, outlets, assemblies, and faceplates.

2.2 TRENCH-TYPE UNDERFLOOR RACEWAYS

A. Description: Trench-type raceways used as header or feeder raceways to serve service raceways.

B. Source Limitations: Obtain underfloor raceway components for each system through single source from single manufacturer.

C. Trench: Steel, shop or factory welded and fabricated to indicated sizes. Include the following features:

1. Slab Depth Adjustment: Minimum of minus 1/8 inch to plus 5/8 inch before and during concrete placement.
2. Cover Supports: Height adjustable, with leveling screws to rigidly support cover assembly.
3. Screed Strip: Extruded aluminum along both edges at proper elevation without requiring shim material.
4. Trim Strip: Select to accommodate floor finish material.
5. Partitions: Arranged to separate channels and isolate wiring of different systems.
6. Grommeted openings in active floor cells or service raceways.
7. Manufacturer's standard corrosion-resistant finish, applied after fabrication.

D. Cover Plates: Removable, steel plates, 1/4 inch thick, each weighing 60 lb or less with full gasket attached to side units. Fabricate intermediate supports to limit unsupported spans to 15 inches or less. Fabricate covers with appropriate depth recess to receive indicated floor finish.

2.3 SUPPORTS, RACEWAY FITTINGS, AND HARDWARE

A. Source Limitations: Obtain underfloor raceway supports, fittings, and hardware components for each system through single source from single manufacturer.

B. Supports, fittings, and hardware shall be compatible with raceway and outlet system and shall be listed for use with raceway systems and components delivered.

C. Supports: Adjustable for height and arranged to maintain alignment and spacing of raceways during concrete placement. Include hold-down straps.

D. Raceway Fittings: Couplings, expansion-joint sleeves, cross-under offsets, vertical and horizontal elbows, grounding screws, adapters, end caps, and other fittings suitable for use with basic components to form a complete installation.

2.4 JUNCTION BOXES

A. Description: Raceway manufacturer's standard enclosure for indicated type, quantity, arrangement, and configuration of raceways at each raceway junction, intersection, and access location. Include the following accessories and features:

1. Mounting brackets.

2. Escutcheons and holders to accommodate surrounding floor covering.
3. Means for leveling and height adjustment more than 3/8 inch before and after concrete is placed.
4. Boxes shall withstand a minimum 300-lb concentrated load. Internal supports shall be provided as needed to meet this requirement.
5. All boxes shall provide 2-inch-minimum bend radius for data and communication cables.
6. Raceway Openings: For underfloor raceways and conduits arranged to accommodate raceway layout.
7. Covers shall have appropriate depth recess to receive specific floor finish material.
8. Partitions to separate wiring of different systems.

2.5 SERVICE FITTINGS/ACTIVATIONS

A. Source Limitations: Obtain underfloor raceway service fittings and hardware for each system through single source from single manufacturer.

B. Exposed Parts Finish: To be approved by Architect.

C. Flush, Single-System Service Fitting for Rectangular Inserts: Include mounting, hinged cover, and trim to support and provide access to connector, jack, or receptacle devices mounted flush with floor within insert.

1. Connector, Jack, and Receptacle Devices: Modular type.
2. Power Receptacle Rating: 20 A, 120 V unless otherwise indicated.
3. Recess-Mounted Service Fitting: Modular fittings compatible with preset inserts. Include device plates for indicated systems and provisions for receptacles, jacks, and connectors. Include hinged flush covers with recessed depth to match thickness of floor finish material. Provide for internally mounted receptacle- and communication-jack and connector assemblies.

    a. Duplex receptacle.
    b. Duplex data jacks.
    c. Double duplex receptacles.
    d. Duplex receptacle and duplex data jacks.
    e. Fiber-optic cable connector.

D. Surface-Mounted Service Fitting: Modular pedestal type, with locking attachment matched to insert floor opening.

1. Power-outlet, double-faced, surface-mounted unit for duplex receptacle on both sides.
2. Power-outlet, single-faced, surface-mounted unit for duplex receptacle on one side.
3. Communication-outlet, double-faced, surface-mounted unit.

    a. Include bushed openings on both sides; 1-inch minimum diameter; insulated with nonconducting material.
    b. Include provisions for modular dual fiber-optic connector assembly on both sides.
    c. Include provisions for modular dual jack-connector assembly, rated for Category 6 on both sides.

4. Communication-outlet, single-faced, surface-mounted unit with bushed opening on one side; 1-inch minimum diameter; insulated with nonconducting material.
5. Combination surface-mounted unit for duplex receptacle on one side and with communication cable connection provision on opposite side.

a. Communication Side: Include bushed opening; 1-inch minimum diameter; insulated with nonconducting material.
b. Communication Side: Include provisions for modular dual jack-connector assembly, rated for Category 6.

6. Flush-Mounted Service Fittings: Modular fittings compatible with preset inserts and shall include covers, provisions for receptacles jacks and connector assemblies and wiring extensions to wall-mounted outlets, and associated device plates for indicated systems. Include flush covers, recessed to suit floor finish material.
7. Indicate types and locations of devices on Drawings.

a. Duplex convenience receptacle.
b. Duplex data outlets.
c. Double duplex convenience receptacles.
d. Duplex convenience receptacle and duplex data outlets.
e. Double duplex data outlets.
f. Duplex fiber-optic communication connector.
g. Wiring-Extension Service Fittings: Arrangement of brackets and mountings to support and provide access to wiring or cabling of a cell, and to connect the cable or raceway that extends the system to an individual wall outlet. Provide for connection of RMC for power extensions, and ENT optical fiber/communication cable raceway for communication system extensions.

PART 3 - EXECUTION

3.1 EXAMINATION

A. Examine substrates, areas, and conditions, with Installer present, for compliance with requirements for installation tolerances and other conditions affecting performance of the Work.

B. Proceed with installation only after unsatisfactory conditions have been corrected.

3.2 INSTALLATION

A. Install raceways aligned and leveled and, unless otherwise indicated, parallel or perpendicular to floor supports.

B. Maintain arrangement of conductor services throughout the raceway system.

C. Install a concrete mud slab for support of cellular metal, flush duct, or trench duct raceway. Construct mud slab with wire mesh in the top 1 inch of concrete.

D. Install a vapor barrier between the cellular metal raceway and a substrate in contact with earth.

E. Arrange supports to attain proper elevation, alignment, and spacing of raceways. Fasten supports securely at ends and at intervals not to exceed 60 inches, to prevent movement during concrete pour.

F. Level raceway components with finished slab and make adjustments in raceway component elevation to accommodate indicated floor finishes.

G. Junction Boxes: Install tops level and flush with finished floor. Install blank closure plates or plugs to close unused junction-box openings. Grout boxes in place to prevent movement during construction. Place top covers in inverted position during construction to prevent damage to surface of cover. Reinstall covers in proper position prior to final acceptance of the Work.

H. Install preset inserts per manufacturer's instructions.

I. Adjust supports to maintain a 1/8- to 3/8-inch finished concrete cover over preset inserts.

J. Remove burrs, sharp edges, dents, and mechanical defects.

K. Cap or plug boxes, insert- and service-fitting openings, and open ends of raceways.

L. Install expansion fittings with suitable bonding jumper where raceways cross building expansion joints.

M. Bond underfloor raceway components to create a continuous bonding path.

N. Seal raceways, cells, junction boxes, and inserts to prevent water, concrete, or foreign matter from entering raceways before and during pouring slab or placing fill. Tape joints or seal with compound, as recommended in writing by underfloor raceway manufacturer.

O. Install a marker at the center of the last insert of each cell and channel of each straight run of metal underfloor service raceway to locate the insert and identify the system.

1. Install markers at last inserts on both sides of permanent walls and at first inserts adjacent to each junction box.
2. Install markers flush at screed line before pouring slab or placing fill. Extend marker with grommeted screw when floor covering is placed. Do not extend through carpet.
3. Use slotted-head screw to identify electrical power; use Phillips-head screw to identify conventional communications.
4. Use another distinctive screw head to identify third system, such as special-purpose wiring.

P. Protect underfloor raceway system from damage. Do not use the installed duct system as working platforms or walkways. Do not allow equipment or heavy traffic over duct during construction period, without first installing ramps over the duct. Ramps shall be designed so that imposed loads are not transferred to the duct. Components of the system that are damaged during construction shall be replaced.

Q. Install concrete surrounding underfloor raceways according to Section 03 3000 "Cast-in-Place Concrete."

R. Afterset Inserts: Cut, hole saw, and drill slab and raceways to allow for installation at locations indicated on plans.

S. Wiring shall comply with Section 26 0519 "Low-Voltage Electrical Power Conductors and Cables" and NFPA 70 requirements for wet locations.

1. Install wiring from outlet insert toward junction boxes, then to termination at panel.
2. Splices: All splices and taps shall be made in junction boxes. No splices or taps shall be made in raceways or outlet inserts.

3.3 FIELD QUALITY CONTROL

A. Manufacturer's Field Service: Engage a factory-authorized service representative to test and inspect components, assemblies, and equipment installations, including connections.

B. Perform the following tests and inspections with the assistance of a factory-authorized service representative:

1. Perform visual inspection of interior of each section of trench raceway to verify absence of dirt, dust, construction debris, and moisture. Replace damaged and malfunctioning components.
2. Prior to and after concrete pour, perform point-to-point tests of ground continuity and resistance of ground path between the most remote accessible fitting on each branch of each underfloor raceway system and the main electrical distribution grounding system.

    a. Determine cause and perform correction of any point-to-point resistance value that exceeds 0.05 ohms.
    b. Comply with NETA Acceptance Testing Specification about safety, suitability of test equipment, test instrument calibration, and test report and records.

C. Prepare test and inspection reports.

3.4 CLEANING

A. Clean and swab out underfloor raceways, inserts, and junction boxes after finish has been applied to floor slab, and remove foreign material, dirt, and moisture. Leave interiors clean and dry.

END OF SECTION

SECTION 26 0543

UNDERGROUND DUCTS AND RACEWAYS FOR ELECTRICAL SYSTEMS

PART 1 - GENERAL

1.1 RELATED DOCUMENTS

A. Drawings and general provisions of the Contract, including General and Supplementary Conditions and Division 01 Specification Sections, apply to this Section.

1.2 SUMMARY

A. Section Includes:

1. Metal conduits and fittings, including GRC and PVC-coated steel conduit.
2. Rigid nonmetallic duct.
3. Flexible nonmetallic duct.
4. Duct accessories.
5. Precast concrete handholes.
6. Polymer concrete handholes and boxes with polymer concrete cover.
7. Fiberglass handholes and boxes with polymer concrete cover.
8. Fiberglass handholes and boxes.
9. High-density plastic boxes.
10. Precast manholes.
11. Cast-in-place manholes.
12. Utility structure accessories.

1.3 DEFINITIONS

A. Direct Buried: Duct or a duct bank that is buried in the ground, without any additional casing materials such as concrete.

B. Duct: A single duct or multiple ducts. Duct may be either installed singly or as component of a duct bank.

C. Duct Bank:

1. Two or more ducts installed in parallel, with or without additional casing materials.
2. Multiple duct banks.

D. GRC: Galvanized rigid (steel) conduit.

E. Trafficways: Locations where vehicular or pedestrian traffic is a normal course of events.

1.4 ACTION SUBMITTALS

A. Product Data: For each type of product.

1. Include duct-bank materials, including spacers and miscellaneous components.
2. Include duct, conduits, and their accessories, including elbows, end bells, bends, fittings, and solvent cement.
3. Include accessories for manholes, handholes, boxes, and other utility structures.
4. Include underground-line warning tape.
5. Include warning planks.

B. Shop Drawings:

1. Precast or Factory-Fabricated Underground Utility Structures:

a. Include plans, elevations, sections, details, attachments to other work, and accessories.
b. Include duct entry provisions, including locations and duct sizes.
c. Include reinforcement details.
d. Include frame and cover design and manhole chimneys.
e. Include ladder/step details.
f. Include grounding details.
g. Include dimensioned locations of cable rack inserts, pulling-in and lifting irons, and sumps.
h. Include joint details.

2. Factory-Fabricated Handholes and Boxes Other Than Precast Concrete:

a. Include dimensioned plans, sections, and elevations, and fabrication and installation details.
b. Include duct entry provisions, including locations and duct sizes.
c. Include cover design.
d. Include grounding details.
e. Include dimensioned locations of cable rack inserts, and pulling-in and lifting irons.

1.5 INFORMATIONAL SUBMITTALS

A. Duct and Duct-Bank Coordination Drawings: Show duct profiles and coordination with other utilities and underground structures.

1. Include plans and sections, drawn to scale, and show bends and locations of expansion fittings.
2. Drawings shall be signed and sealed by a qualified professional engineer.

B. Qualification Data: For professional engineer and testing agency responsible for testing nonconcrete handholes and boxes.

C. Product Certificates: For concrete and steel used in precast concrete manholes and handholes, as required by ASTM C 858.

D. Source quality-control reports.

E. Field quality-control reports.

1.6 MAINTENANCE MATERIALS SUBMITTALS

A. Furnish extra materials that match products installed and that are packaged with protective covering for storage and identified with labels describing contents.

B. Furnish cable-support stanchions, arms, insulators, and associated fasteners in quantities equal to 5 percent of quantity of each item installed.

1.7 QUALITY ASSURANCE

A. Testing Agency Qualifications: Qualified according to ASTM E 329 for testing indicated.

1.8 FIELD CONDITIONS

A. Interruption of Existing Electrical Service: Do not interrupt electrical service to facilities occupied by Owner or others unless permitted under the following conditions, and then only after arranging to provide temporary electrical service according to requirements indicated:

1. Notify Construction Manager and Owner no fewer than two days in advance of proposed interruption of electrical service.
2. Do not proceed with interruption of electrical service without Construction Manager's and Owner's written permission.

B. Ground Water: Assume ground-water level is at grade level unless a lower water table is noted on Drawings.

C. Ground Water: Assume ground-water level is 36 inches (900 mm) below ground surface unless a higher water table is noted on Drawings.

PART 2 - PRODUCTS

2.1 METAL CONDUIT AND FITTINGS

A. GRC: Comply with ANSI C80.1 and UL 6.

B. Coated Steel Conduit: PVC-coated GRC.

1. Comply with NEMA RN 1.
2. Coating Thickness: 0.040 inch (1 mm), minimum.

C. Listed and labeled as defined in NFPA 70, by a nationally recognized testing laboratory, and marked for intended location and application.

2.2 RIGID NONMETALLIC DUCT

A. Underground Plastic Utilities Duct: Type EPC-80-PVC and Type EPC-40-PVC RNC, complying with NEMA TC 2 and UL 651, with matching fittings complying with NEMA TC 3 by same manufacturer as duct.

B. Underground Plastic Utilities Duct: Type DB-60 PVC and Type DB-120 PVC RNC, complying with NEMA TC 6 & 8 and ASTM F 512 for direct burial, with matching fittings complying with NEMA TC 9 by same manufacturer as duct.

C. Underground Plastic Utilities Duct: Type EB-20 PVC RNC, complying with NEMA TC 6 & 8, ASTM F 512, and UL 651, with matching fittings complying with NEMA TC 9 by same manufacturer as duct.

D. Listed and labeled as defined in NFPA 70, by a nationally recognized testing laboratory, and marked for intended location and application.

E. Solvents and Adhesives: As recommended by conduit manufacturer.

2.3 FLEXIBLE NONMETALLIC DUCTS

A. HDPE Duct: Type EPEC-40 HDPE and Type EPEC-80 HDPE, complying with NEMA TC 7 and UL 651A.

1. Listed and labeled as defined in NFPA 70, by a nationally recognized testing laboratory, and marked for intended location and application.

2.4 DUCT ACCESSORIES

A. Duct Spacers: Factory-fabricated, rigid, PVC interlocking spacers; sized for type and size of duct with which used, and selected to provide minimum duct spacing indicated while supporting duct during concreting or backfilling.

1.

B. Underground-Line Warning Tape: Comply with requirements for underground-line warning tape specified in Section 26 0553 "Identification for Electrical Systems."

C. Concrete Warning Planks: Nominal 12 by 24 by 3 inches (300 by 600 by 75 mm) in size, manufactured from 6000-psi (41-MPa) concrete.

1. Color: Red dye added to concrete during batching.
2. Mark each plank with "ELECTRIC" in 2-inch- (50-mm-) high, 3/8-inch- (10-mm-) deep letters.

2.5 PRECAST CONCRETE HANDHOLES AND BOXES

A. Description: Factory-fabricated, reinforced-concrete, monolithically poured walls and bottom unless open-bottom enclosures are indicated. Frame and cover shall form top of enclosure and shall have load rating consistent with that of handhole or box.

B. Comply with ASTM C 858 for design and manufacturing processes.

C. Frame and Cover: Weatherproof cast-iron frame, with cast-iron cover with recessed cover hook eyes and tamper-resistant, captive, cover-securing bolts.

D. Frame and Cover: Weatherproof steel frame, with steel cover with recessed cover hook eyes

and tamper-resistant, captive, cover-securing bolts.

E. Frame and Cover: Weatherproof steel frame, with hinged steel access door assembly with tamper-resistant, captive, cover-securing bolts.

1. Cover Hinges: Concealed, with hold-open ratchet assembly.
2. Cover Handle: Recessed.

F. Frame and Cover: Weatherproof aluminum frame with hinged aluminum access door assembly with tamper-resistant, captive, cover-securing bolts.

1. Cover Hinges: Concealed, with hold-open ratchet assembly.
2. Cover Handle: Recessed.

G. Cover Finish: Nonskid finish shall have a minimum coefficient of friction of 0.50.

H. Cover Legend: Molded lettering, "ELECTRIC."

I. Configuration: Units shall be designed for flush burial and have closed bottom unless otherwise indicated.

J. Extensions and Slabs: Designed to mate with bottom of enclosure. Same material as enclosure.

1. Extension shall provide increased depth of 12 inches (300 mm)
2. Slab: Same dimensions as bottom of enclosure, and arranged to provide closure.

K. Joint Sealant: Asphaltic-butyl material with adhesion, cohesion, flexibility, and durability properties necessary to withstand maximum hydrostatic pressures at the installation location with the ground-water level at grade.

L. Knockout Panels: Precast openings in walls, arranged to match dimensions and elevations of approaching duct, plus an additional 12 inches (300 mm) vertically and horizontally to accommodate alignment variations.

1. Splayed location.
2. Knockout panels shall be located no less than 6 inches (150 mm) from interior surfaces of walls, floors, or frames and covers of handholes, but close enough to corners to facilitate racking of cables on walls.
3. Knockout panel opening shall have cast-in-place, welded-wire fabric reinforcement for field cutting and bending to tie in to concrete envelopes of duct.
4. Knockout panels shall be framed with at least two additional No. 3 steel reinforcing bars in concrete around each opening.
5. Knockout panels shall be 1-1/2 to 2 inches (38 to 50 mm) thick.

M. Duct Entrances in Handhole Walls: Cast end-bell or duct-terminating fitting in wall for each entering duct.

1. Type and size shall match fittings to duct to be terminated.
2. Fittings shall align with elevations of approaching duct and be located near interior corners of handholes to facilitate racking of cable.

N. Handholes 12 inches wide by 24 inches long (300 mm wide by 600 mm long) and larger shall have inserts for cable racks and pulling-in irons installed before concrete is poured.

2.6 POLYMER CONCRETE HANDHOLES AND BOXES WITH POLYMER CONCRETE COVER

A. Description: Molded of sand and aggregate, bound together with a polymer resin, and reinforced with steel or fiberglass or a combination of the two.

B. Standard: Comply with SCTE 77. Comply with tier requirements in "Underground Enclosure Application" Article.

C. Color: Gray or Green.

D. Configuration: Units shall be designed for flush burial and have closed bottom unless otherwise indicated.

E. Cover: Weatherproof, secured by tamper-resistant locking devices and having structural load rating consistent with enclosure.

F. Cover Finish: Nonskid finish shall have a minimum coefficient of friction of 0.50.

G. Cover Legend: Molded lettering, "ELECTRIC."

H. Direct-Buried Wiring Entrance Provisions: Knockouts equipped with insulated bushings or end-bell fittings, selected to suit box material, sized for wiring indicated, and arranged for secure, fixed installation in enclosure wall.

I. Duct Entrance Provisions: Duct-terminating fittings shall mate with entering duct for secure, fixed installation in enclosure wall.

J. Handholes 12 inches wide by 24 inches long (300 mm wide by 600 mm long) and larger shall have factory-installed inserts for cable racks and pulling-in irons.

2.7 FIBERGLASS HANDHOLES AND BOXES WITH POLYMER CONCRETE FRAME AND COVER

A. Description: Sheet-molded, fiberglass-reinforced, polyester resin enclosure joined to polymer concrete top ring or frame.

B. Standard: Comply with SCTE 77. Comply with tier requirements in "Underground Enclosure Application" Article.

C. Color: Gray or Green.

D. Configuration: Units shall be designed for flush burial and have closed bottom unless otherwise indicated.

E. Cover: Weatherproof, secured by tamper-resistant locking devices and having structural load rating consistent with enclosure.

F. Cover Finish: Nonskid finish shall have a minimum coefficient of friction of 0.50.

G. Cover Legend: Molded lettering, "ELECTRIC."

H. Direct-Buried Wiring Entrance Provisions: Knockouts equipped with insulated bushings or end-bell fittings, selected to suit box material, sized for wiring indicated, and arranged for secure,

fixed installation in enclosure wall.

I. Duct Entrance Provisions: Duct-terminating fittings shall mate with entering duct for secure, fixed installation in enclosure wall.

J. Handholes 12 inches wide by 24 inches long (300 mm wide by 600 mm long) and larger shall have factory-installed inserts for cable racks and pulling-in irons.

2.8 FIBERGLASS HANDHOLES AND BOXES

A. Description: Molded of fiberglass-reinforced polyester resin, with covers made of fiberglass.

B. Standard: Comply with SCTE 77. Comply with tier requirements in "Underground Enclosure Application" Article.

C. Color: Gray or Green.

D. Configuration: Units shall be designed for flush burial and have closed bottom unless otherwise indicated.

E. Cover: Weatherproof, secured by tamper-resistant locking devices and having structural load rating consistent with enclosure.

F. Cover Finish: Nonskid finish shall have a minimum coefficient of friction of 0.50.

G. Cover Legend: Molded lettering, "ELECTRIC."

H. Direct-Buried Wiring Entrance Provisions: Knockouts equipped with insulated bushings or end-bell fittings, selected to suit box material, sized for wiring indicated, and arranged for secure, fixed installation in enclosure wall.

I. Duct Entrance Provisions: Duct-terminating fittings shall mate with entering duct for secure, fixed installation in enclosure wall.

J. Handholes 12 inches wide by 24 inches long (300 mm wide by 600 mm long) and larger shall have factory-installed inserts for cable racks and pulling-in irons.

2.9 HIGH-DENSITY PLASTIC BOXES

A. Description: Injection molded of HDPE or copolymer-polypropylene. Cover shall be made of plastic.

B. Standard: Comply with SCTE 77. Comply with tier requirements in "Underground Enclosure Application" Article.

C. Color: Gray or Green.

D. Configuration: Units shall be designed for flush burial and have closed bottom unless otherwise indicated.

E. Cover: Weatherproof, secured by tamper-resistant locking devices and having structural load rating consistent with enclosure.

F. Cover Finish: Nonskid finish shall have a minimum coefficient of friction of 0.50.

G. Cover Legend: Molded lettering, "ELECTRIC."

H. Direct-Buried Wiring Entrance Provisions: Knockouts equipped with insulated bushings or end-bell fittings, selected to suit box material, sized for wiring indicated, and arranged for secure, fixed installation in enclosure wall.

I. Duct Entrance Provisions: Duct-terminating fittings shall mate with entering duct for secure, fixed installation in enclosure wall.

J. Handholes 12 inches wide by 24 inches long (300 mm wide by 600 mm long) and larger shall have factory-installed inserts for cable racks and pulling-in irons.

2.10 PRECAST MANHOLES

A. Description: One-piece units and units with interlocking mating sections, complete with accessories, hardware, and features.

B. Comply with ASTM C 858.

C. Structural Design Loading: Comply with requirements in "Underground Enclosure Application" Article.

D. Knockout Panels: Precast openings in walls, arranged to match dimensions and elevations of approaching duct, plus an additional 12 inches (300 mm) vertically and horizontally to accommodate alignment variations.

1. Splayed location.
2. Knockout panels shall be located no less than 6 inches (150 mm) from interior surfaces of walls, floors, or roofs of manholes, but close enough to corners to facilitate racking of cables on walls.
3. Knockout panel opening shall have cast-in-place, welded-wire fabric reinforcement for field cutting and bending to tie in to concrete envelopes of duct.
4. Knockout panel shall be framed with at least two additional No. 3 steel reinforcing bars in concrete around each opening.
5. Knockout panels shall be 1-1/2 to 2 inches (38 to 50 mm) thick.

E. Duct Entrances in Manhole Walls: Cast end-bell or duct-terminating fitting in wall for each entering duct.

1. Type and size shall match fittings to duct to be terminated.
2. Fittings shall align with elevations of approaching duct and be located near interior corners of manholes to facilitate racking of cable.

F. Ground Rod Sleeve: Provide a 3-inch (75-mm) PVC sleeve in manhole floors 2 inches (50 mm) from the wall adjacent to, but not underneath, the duct entering the structure.

G. Joint Sealant: Asphaltic-butyl material with adhesion, cohesion, flexibility, and durability properties necessary to withstand maximum hydrostatic pressures at the installation location with the ground-water level at grade.

2.11 CAST-IN-PLACE MANHOLES

A. Description: Underground utility structures, constructed in place, complete with accessories, hardware, and features. Include concrete knockout panels for duct entrance and sleeve for ground rod.

B. Materials: Comply with ASTM C 858 and with Section 03 3000 "Cast-in-Place Concrete."

C. Structural Design Loading: As specified in "Underground Enclosure Application" Article.

2.12 UTILITY STRUCTURE ACCESSORIES

A. Accessories for Utility Structures: Utility equipment and accessory items used for utility structure access and utility support, listed and labeled for intended use and application.

B. Manhole Frames, Covers, and Chimney Components: Comply with structural design loading specified for manhole.

1. Frame and Cover: Weatherproof, gray cast iron complying with ASTM A 48/A 48M, Class 30B with milled cover-to-frame bearing surfaces; diameter, 26 inches (660 mm).

    a. Cover Finish: Nonskid finish shall have a minimum coefficient of friction of 0.50.
    b. Special Covers: Recess in face of cover designed to accept finish material in paved areas.

2. Cover Legend: Cast in. Selected to suit system.

    a. Legend: "ELECTRIC-LV" for duct systems with power wires and cables for systems operating at 600 V and less.
    b. Legend: "ELECTRIC-HV" for duct systems with medium-voltage cables.

3. Manhole Chimney Components: Precast concrete rings with dimensions matched to those of roof opening.

    a. Mortar for Chimney Ring and Frame and Cover Joints: Comply with ASTM C 270, Type M, except for quantities less than 2.0 cu. ft. (60 L) where packaged mix complying with ASTM C 387, Type M, may be used.
    b. Seal joints watertight using preformed plastic or rubber complying with ASTM C 990. Install sealing material according to sealant manufacturers' written instructions.

C. Manhole Sump Frame and Grate: ASTM A 48/A 48M, Class 30B, gray cast iron.

D. Pulling Eyes in Concrete Walls: Eyebolt with reinforcing-bar fastening insert, 2-inch- (50-mm-) diameter eye, and 1-by-4-inch (25-by-100-mm) bolt.

1. Working Load Embedded in 6-Inch (150-mm), 4000-psi (27.6-MPa) Concrete: 13,000-lbf (58-kN) minimum tension.

E. Pulling Eyes in Nonconcrete Walls: Eyebolt with reinforced fastening, 1-1/4-inch- (31-mm-) diameter eye, rated 2500-lbf (11-kN) minimum tension.

F. Pulling-in and Lifting Irons in Concrete Floors: 7/8-inch- (22-mm-) diameter, hot-dip galvanized,

bent steel rod; stress relieved after forming; and fastened to reinforcing rod. Exposed triangular opening.

1. Ultimate Yield Strength: 40,000-lbf (180-kN) shear and 60,000-lbf (270-kN) tension.

G. Bolting Inserts for Concrete Utility Structure Cable Racks and Other Attachments: Flared, threaded inserts of noncorrosive, chemical-resistant, nonconductive thermoplastic material; 1/2-inch (13-mm) ID by 2-3/4 inches (69 mm) deep, flared to 1-1/4 inches (31 mm) minimum at base.

1. Tested Ultimate Pullout Strength: 12,000 lbf (53 kN) minimum.

H. Ground Rod Sleeve: 3-inch (75-mm) PVC sleeve in manhole floors 2 inches (50 mm) from the wall adjacent to, but not underneath, the ducts routed from the facility.

I. Expansion Anchors for Installation after Concrete Is Cast: Zinc-plated, carbon-steel-wedge type with stainless-steel expander clip with 1/2-inch (13-mm) bolt, 5300-lbf (24-kN) rated pullout strength, and minimum 6800-lbf (30-kN) rated shear strength.

J. Cable Rack Assembly: Steel, hot-rolled galvanized, except insulators.

1. Stanchions: T-section or channel; 2-1/4-inch (56-mm) nominal size; punched with 14 holes on 1-1/2-inch (38-mm) centers for cable-arm attachment.
2. Arms: 1-1/2 inches (38 mm) wide, lengths ranging from 3 inches (75 mm) with 450-lb (204-kg) minimum capacity to 18 inches (450 mm) with 250-lb (114-kg) minimum capacity. Arms shall have slots along full length for cable ties and be arranged for secure mounting in horizontal position at any vertical location on stanchions.
3. Insulators: High-glaze, wet-process porcelain arranged for mounting on cable arms.

K. Cable Rack Assembly: Nonmetallic. Components fabricated from nonconductive, fiberglass-reinforced polymer.

1. Stanchions: Nominal 36 inches (900 mm) high by 4 inches (100 mm) wide, with minimum of nine holes for arm attachment.
2. Arms: Arranged for secure, drop-in attachment in horizontal position at any location on cable stanchions, and capable of being locked in position. Arms shall be available in lengths ranging from 3 inches (75 mm) with 450-lb (204-kg) minimum capacity to 20 inches (500 mm) with 250-lb (114-kg) minimum capacity. Top of arm shall be nominally 4 inches (100 mm) wide, and arm shall have slots along full length for cable ties.

L. Duct-Sealing Compound: Nonhardening, safe for contact with human skin, not deleterious to cable insulation, and workable at temperatures as low as 35 deg F (2 deg C). Capable of withstanding temperature of 300 deg F (150 deg C) without slump and adhering to clean surfaces of plastic ducts, metallic conduit, conduit and duct coatings, concrete, masonry, lead, cable sheaths, cable jackets, insulation materials, and common metals.

M. Fixed Manhole Ladders: Arranged for attachment to roof or wall and floor of manhole. Ladder and mounting brackets and braces shall be fabricated from nonconductive, structural-grade, fiberglass-reinforced resin.

N. Portable Manhole Ladders: UL-listed, heavy-duty fiberglass specifically designed for portable use for access to electrical manholes. Minimum length equal to distance from deepest manhole floor to grade plus 36 inches (900 mm). One required.

O. Cover Hooks: Light duty, designed for lifts less than 60 lbf (270 N). Two required.

2.13 SOURCE QUALITY CONTROL

A. Test and inspect precast concrete utility structures according to ASTM C 1037.

B. Nonconcrete Handhole and Pull-Box Prototype Test: Test prototypes of manholes and boxes for compliance with SCTE 77. Strength tests shall be for specified tier ratings of products supplied.

1. Tests of materials shall be performed by an independent testing agency.
2. Strength tests of complete boxes and covers shall be by an independent testing agency or manufacturer. A qualified registered professional engineer shall certify tests by manufacturer.
3. Testing machine pressure gages shall have current calibration certification, complying with ISO 9000 and ISO 10012, and traceable to NIST standards.

PART 3 - EXECUTION

3.1 PREPARATION

A. Coordinate layout and installation of duct, duct bank, manholes, handholes, and boxes with final arrangement of other utilities, site grading, and surface features as determined in the field. Notify Architect if there is a conflict between areas of excavation and existing structures or archaeological sites to remain.

B. Coordinate elevations of duct and duct-bank entrances into manholes, handholes, and boxes with final locations and profiles of duct and duct banks, as determined by coordination with other utilities, underground obstructions, and surface features. Revise locations and elevations as required to suit field conditions and to ensure that duct and duct bank will drain to manholes and handholes, and as approved by Architect.

C. Clear and grub vegetation to be removed, and protect vegetation to remain according to Section 31 1000 "Site Clearing." Remove and stockpile topsoil for reapplication according to Section 31 1000 "Site Clearing."

3.2 UNDERGROUND DUCT APPLICATION

A. Duct for Electrical Cables More Than 600 V: Type EPC-80-PVC or Type EPC-40-PVC or Type EB-20-PVC RNC, concrete-encased unless otherwise indicated.

B. Duct for Electrical Feeders 600 V and Less: Type EPC-80-PVC or Type EPC-40-PVC or Type EB-20-PVC RNC, concrete-encased unless otherwise indicated.

C. Duct for Electrical Feeders 600 V and Less: Type EPC-80-PVC or Type EPC-40-PVC RNC, direct-buried unless otherwise indicated.

D. Duct for Electrical Branch Circuits: Type EPC-80-PVC or Type EPC-40-PVC RNC, direct-buried unless otherwise indicated.

E. Bored Underground Duct: Type EPEC-40-HDPE or Type EPEC-80-HDPE unless otherwise indicated.

F. Underground Ducts Crossing Paved Paths, Walks and Driveways, Roadways and Railroads:

Type EPC-40 PVC RNC, encased in reinforced concrete.

G. Stub-ups: Concrete-encased GRC.

3.3 UNDERGROUND ENCLOSURE APPLICATION

A. Handholes and Boxes for 600 V and Less:

1. Units in Roadways and Other Deliberate Traffic Paths: Precast concrete. AASHTO HB 17, H-10 structural load rating.
2. Units in Driveway, Parking Lot, and Off-Roadway Locations, Subject to Occasional, Nondeliberate Loading by Heavy Vehicles: Fiberglass enclosures with polymer concrete frame and cover, SCTE 77, Tier 15 structural load rating.
3. Units in Sidewalk and Similar Applications with a Safety Factor for Nondeliberate Loading by Vehicles: Heavy-duty fiberglass units with polymer concrete frame and cover, SCTE 77, Tier 8 structural load rating.
4. Units Subject to Light-Duty Pedestrian Traffic Only: Fiberglass-reinforced polyester resin, structurally tested according to SCTE 77 with 3000-lbf (13 345-N) vertical loading.
5. Cover design load shall not exceed the design load of the handhole or box.

B. Manholes: Precast or cast-in-place concrete.

1. Units Located in Roadways and Other Deliberate Traffic Paths by Heavy or Medium Vehicles: H-20 structural load rating according to AASHTO HB 17.
2. Units Not Located in Deliberate Traffic Paths by Heavy or Medium Vehicles: H-10 load rating according to AASHTO HB 17.

3.4 EARTHWORK

A. Excavation and Backfill: Comply with Section 31 2000 "Earth Moving," but do not use heavy-duty, hydraulic-operated, compaction equipment.

B. Restoration: Replace area immediately after backfilling is completed or after construction vehicle traffic in immediate area is complete.

C. Restore surface features at areas disturbed by excavation, and re-establish original grades unless otherwise indicated. Replace removed sod immediately after backfilling is completed.

D. Restore areas disturbed by trenching, storing of dirt, cable laying, and other work. Restore vegetation and include necessary topsoiling, fertilizing, liming, seeding, sodding, sprigging, and mulching. Comply with Section 32 9200 "Turf and Grasses" and Section 32 9300 "Plants."

E. Cut and patch existing pavement in the path of underground duct, duct bank, and underground structures according to "Cutting and Patching" Article in Section 01 7300 "Execution."

3.5 DUCT AND DUCT-BANK INSTALLATION

A. Where indicated on Drawings, install duct, spacers, and accessories into the duct-bank configuration shown. Duct installation requirements in this Section also apply to duct bank.

B. Install duct according to NEMA TCB 2.

C. Slope: Pitch duct a minimum slope of 1:300 down toward manholes and handholes and away from buildings and equipment. Slope duct from a high point between two manholes, to drain in both directions.

D. Curves and Bends: Use 5-degree angle couplings for small changes in direction. Use manufactured long sweep bends with a minimum radius of 48 inches (1200 mm), both horizontally and vertically, at other locations unless otherwise indicated.

1. Duct shall have maximum of two 90 degree bends or the total of all bends shall be no more 180 degrees between pull points.

E. Joints: Use solvent-cemented joints in duct and fittings and make watertight according to manufacturer's written instructions. Stagger couplings so those of adjacent duct do not lie in same plane.

F. Installation Adjacent to High-Temperature Steam Lines: Where duct is installed parallel to underground steam lines, perform calculations showing the duct will not be subject to environmental temperatures above 40 deg C. Where environmental temperatures are calculated to rise above 40 deg C, and anywhere the duct crosses above an underground steam line, install insulation blankets listed for direct burial to isolate the duct bank from the steam line.

G. End Bell Entrances to Manholes and Concrete and Polymer Concrete Handholes: Use end bells, spaced approximately 10 inches (250 mm) o.c. for 5-inch (125-mm) duct, and vary proportionately for other duct sizes.

1. Begin change from regular spacing to end-bell spacing 10 feet (3 m) from the end bell, without reducing duct slope and without forming a trap in the line.
2. Expansion and Deflection Fittings: Install an expansion and deflection fitting in each duct in the area of disturbed earth adjacent to manhole or handhole. Install an expansion fitting near the center of all straight line direct-buried duct with calculated expansion of more than 3/4 inch (19 mm).
3. Grout end bells into structure walls from both sides to provide watertight entrances.

H. Terminator Entrances to Manholes and Concrete and Polymer Concrete Handholes: Use manufactured, cast-in-place duct terminators, with entrances into structure spaced approximately 6 inches (150 mm) o.c. for 4-inch (100-mm) duct, and vary proportionately for other duct sizes.

1. Begin change from regular spacing to terminator spacing 10 feet (3 m) from the terminator, without reducing duct line slope and without forming a trap in the line.
2. Expansion and Deflection Fittings: Install an expansion and deflection fitting in each duct in the area of disturbed earth adjacent to manhole or handhole. Install an expansion fitting near the center of all straight line duct with calculated expansion of more than 3/4 inch (19 mm).

I. Building Wall Penetrations: Make a transition from underground duct to GRC at least 10 feet (3 m) outside the building wall, without reducing duct line slope away from the building and without forming a trap in the line. Use fittings manufactured for RNC-to-GRC transition. Install GRC penetrations of building walls as specified in Section 26 0544 "Sleeves and Sleeve Seals for Electrical Raceways and Cabling."

J. Sealing: Provide temporary closure at terminations of duct with pulled cables. Seal spare duct at terminations. Use sealing compound and plugs to withstand at least 15-psig (1.03-MPa) hydrostatic pressure.

K. Pulling Cord: Install 200-lbf- (1000-N-) test nylon cord in empty ducts.

L. Concrete-Encased Ducts and Duct Bank:

1. Excavate trench bottom to provide firm and uniform support for duct. Prepare trench bottoms as specified in Section 31 2000 "Earth Moving" for pipes less than 6 inches (150 mm) in nominal diameter.
2. Width: Excavate trench 12 inches (300 mm) wider than duct on each side.
3. Width: Excavate trench 3 inches (75 mm) wider than duct on each side.
4. Depth: Install so top of duct envelope is at least 24 inches (600 mm) below finished grade in areas not subject to deliberate traffic, and at least 30 inches (750 mm) below finished grade in deliberate traffic paths for vehicles unless otherwise indicated.
5. Support duct on duct spacers coordinated with duct size, duct spacing, and outdoor temperature.
6. Spacer Installation: Place spacers close enough to prevent sagging and deforming of duct, with not less than four spacers per 20 feet (6 m) of duct. Place spacers within 24 inches (600 mm) of duct ends. Stagger spacers approximately 6 inches (150 mm) between tiers. Secure spacers to earth and to duct to prevent floating during concreting. Tie entire assembly together using fabric straps; do not use tie wires or reinforcing steel that may form conductive or magnetic loops around ducts or duct groups.
7. Minimum Space between Duct: 3 inches (75 mm) between edge of duct and exterior envelope wall, 2 inches (50 mm) between ducts for like services, and 4 inches (100 mm) between power and communications ducts.
8. Elbows: Use manufactured duct elbows for stub-ups, at building entrances, and at changes of direction in duct unless otherwise indicated. Extend encasement throughout length of elbow.
9. Elbows: Use manufactured GRC elbows for stub-ups, at building entrances, and at changes of direction in duct run.

    a. Couple RNC duct to GRC with adapters designed for this purpose, and encase coupling with 3 inches (75 mm) of concrete.
    b. Stub-ups to Outdoor Equipment: Extend concrete-encased GRC horizontally a minimum of 60 inches (1500 mm) from edge of base. Install insulated grounding bushings on terminations at equipment.

        1) Stub-ups shall be minimum 4 inches (100 mm)above finished floor and minimum 3 inches (75 mm)from conduit side to edge of slab.

    c. Stub-ups to Indoor Equipment: Extend concrete-encased GRC horizontally a minimum of 60 inches (1500 mm) from edge of wall. Install insulated grounding bushings on terminations at equipment.

        1) Stub-ups shall be minimum 4 inches (100 mm)above finished floor and no less than 3 inches (75 mm)from conduit side to edge of slab.

10. Reinforcement: Reinforce concrete-encased duct where crossing disturbed earth and where indicated. Arrange reinforcing rods and ties without forming conductive or magnetic loops around ducts or duct groups.
11. Forms: Use walls of trench to form side walls of duct bank where soil is self-supporting and concrete envelope can be poured without soil inclusions; otherwise, use forms.
12. Concrete Cover: Install a minimum of 3 inches (75 mm) of concrete cover between edge of duct to exterior envelope wall, 2 inches (50 mm) between duct of like services, and 4 inches (100 mm) between power and communications ducts.
13. Concreting Sequence: Pour each run of envelope between manholes or other terminations in one continuous operation.

a. Start at one end and finish at the other, allowing for expansion and contraction of duct as its temperature changes during and after the pour. Use expansion fittings installed according to manufacturer's written instructions, or use other specific measures to prevent expansion-contraction damage.
b. If more than one pour is necessary, terminate each pour in a vertical plane and install 3/4-inch (15-mm) reinforcing-rod dowels extending a minimum of 18 inches (450 mm) into concrete on both sides of joint near corners of envelope.

14. Pouring Concrete: Comply with requirements in "Concrete Placement" Article in Section 03 3000 "Cast-in-Place Concrete." Place concrete carefully during pours to prevent voids under and between duct and at exterior surface of envelope. Do not allow a heavy mass of concrete to fall directly onto ducts. Allow concrete to flow around duct and rise up in middle, uniformly filling all open spaces. Do not use power-driven agitating equipment unless specifically designed for duct-installation application.

M. Direct-Buried Duct and Duct Bank:

1. Excavate trench bottom to provide firm and uniform support for duct. Comply with requirements in Section 31 2000 "Earth Moving" for preparation of trench bottoms for pipes less than 6 inches (150 mm) in nominal diameter.
2. Width: Excavate trench 12 inches (300 mm) wider than duct on each side.
3. Width: Excavate trench 3 inches (75 mm) wider than duct on each side.
4. Depth: Install top of duct at least 36 inches (900 mm) below finished grade unless otherwise indicated.
5. Set elevation of bottom of duct bank below frost line.
6. Support ducts on duct spacers coordinated with duct size, duct spacing, and outdoor temperature.
7. Spacer Installation: Place spacers close enough to prevent sagging and deforming of duct, with not less than four spacers per 20 feet (6 m) of duct. Place spacers within 24 inches (600 mm) of duct ends. Stagger spacers approximately 6 inches (150 mm) between tiers. Secure spacers to earth and to ducts to prevent floating during concreting. Tie entire assembly together using fabric straps; do not use tie wires or reinforcing steel that may form conductive or magnetic loops around ducts or duct groups.
8. Install duct with a minimum of 3 inches (75 mm) between ducts for like services and 6 inches (150 mm) between power and communications duct.
9. Elbows: Install manufactured duct elbows for stub-ups, at building entrances, and at changes of direction in duct direction unless otherwise indicated. Encase elbows for stub-up ducts throughout length of elbow.
10. Install manufactured GRC elbows for stub-ups, at building entrances, and at changes of direction in duct.

a. Couple RNC duct to GRC with adapters designed for this purpose, and encase coupling with 3 inches (75 mm) of concrete.
b. Stub-ups to Outdoor Equipment: Extend concrete-encased GRC horizontally a minimum of 60 inches (1500 mm) from edge of base. Install insulated grounding bushings on terminations at equipment.

1) Stub-ups shall be minimum 4 inches (100 mm)above finished floor and minimum 3 inches (75 mm)from conduit side to edge of slab.

c. Stub-ups to Indoor Equipment: Extend concrete-encased GRC horizontally a minimum of 60 inches (1500 mm) from edge of wall. Install insulated grounding bushings on terminations at equipment.

1) Stub-ups shall be minimum 4 inches (100 mm)above finished floor and no

less than 3 inches (75 mm)from conduit side to edge of slab.

11. After installing first tier of duct, backfill and compact. Start at tie-in point and work toward end of duct run, leaving ducts at end of run free to move with expansion and contraction as temperature changes during this process. Repeat procedure after placing each tier. After placing last tier, hand place backfill to 4 inches (100 mm) over duct and hand tamp. Firmly tamp backfill around ducts to provide maximum supporting strength. Use hand tamper only. After placing controlled backfill over final tier, make final duct connections at end of run and complete backfilling with normal compaction. Comply with requirements in Section 31 2000 "Earth Moving" for installation of backfill materials.

    a. Place minimum 3 inches (75 mm) of sand as a bed for duct. Place sand to a minimum of 6 inches (150 mm) above top level of duct.
    b. Place minimum 6 inches (150 mm) of engineered fill above concrete encasement of duct.

N. Warning Planks: Bury warning planks approximately 12 inches (300 mm) above direct-buried duct, placing them 24 inches (600 mm) o.c. Align planks along the width and along the centerline of duct or duct bank. Provide an additional plank for each 12-inch (300-mm) increment of duct-bank width over a nominal 18 inches (450 mm). Space additional planks 12 inches (300 mm) apart, horizontally.

O. Underground-Line Warning Tape: Bury nonconducting and conducting underground line specified in Section 26 0553 "Identification for Electrical Systems" no less than 12 inches (300 mm) above all concrete-encased duct and duct banks and approximately 12 inches (300 mm) below grade. Align tape parallel to and within 3 inches (75 mm) of centerline of duct bank. Provide an additional warning tape for each 12-inch (300-mm) increment of duct-bank width over a nominal 18 inches (450 mm). Space additional tapes 12 inches (300 mm) apart, horizontally.

3.6 INSTALLATION OF CONCRETE MANHOLES, HANDHOLES, AND BOXES

A. Cast-in-Place Manhole Installation:

1. Finish interior surfaces with a smooth-troweled finish.
2. Knockouts for Future Duct Connections: Form and pour concrete knockout panels 1-1/2 to 2 inches (38 to 50 mm) thick, arranged as indicated.
3. Comply with requirements in Section 03 3000 "Cast-in-Place Concrete" for cast-in-place concrete, formwork, and reinforcement.

B. Precast Concrete Handhole and Manhole Installation:

1. Comply with ASTM C 891 unless otherwise indicated.
2. Install units level and plumb and with orientation and depth coordinated with connecting duct, to minimize bends and deflections required for proper entrances.
3. Unless otherwise indicated, support units on a level bed of crushed stone or gravel, graded from 1-inch (25-mm) sieve to No. 4 (4.75-mm) sieve and compacted to same density as adjacent undisturbed earth.

C. Elevations:

1. Manhole Roof: Install with rooftop at least 15 inches (375 mm) below finished grade.
2. Manhole Frame: In paved areas and trafficways, set frames flush with finished grade. Set other manhole frames 1 inch (25 mm) above finished grade.

3. Install handholes with bottom below frost line below grade.
4. Handhole Covers: In paved areas and trafficways, set surface flush with finished grade. Set covers of other handholes 1 inch (25 mm) above finished grade.
5. Where indicated, cast handhole cover frame integrally with handhole structure.

D. Drainage: Install drains in bottom of manholes where indicated. Coordinate with drainage provisions indicated.

E. Manhole Access: Circular opening in manhole roof; sized to match cover size.

1. Manholes with Fixed Ladders: Offset access opening from manhole centerlines to align with ladder.
2. Install chimney, constructed of precast concrete collars and rings, to support cast-iron frame to connect cover with manhole roof opening. Provide moisture-tight masonry joints and waterproof grouting for frame to chimney.

F. Waterproofing: Apply waterproofing to exterior surfaces of manholes and handholes after concrete has cured at least three days. Waterproofing materials and installation are specified in 07 Series Specifications. After duct has been connected and grouted, and before backfilling, waterproof joints and connections, and touch up abrasions and scars. Waterproof exterior of manhole chimneys after mortar has cured at least three days.

G. Dampproofing: Apply dampproofing to exterior surfaces of manholes and handholes after concrete has cured at least three days. Dampproofing materials and installation are specified in Section 07 1113 "Bituminous Dampproofing." After ducts are connected and grouted, and before backfilling, dampproof joints and connections, and touch up abrasions and scars. Dampproof exterior of manhole chimneys after mortar has cured at least three days.

H. Hardware: Install removable hardware, including pulling eyes, cable stanchions, and cable arms, and insulators, as required for installation and support of cables and conductors and as indicated.

I. Fixed Manhole Ladders: Arrange to provide for safe entry with maximum clearance from cables and other items in manholes.

J. Field-Installed Bolting Anchors in Manholes and Concrete Handholes: Do not drill deeper than 3-7/8 inches (97 mm) for manholes and 2 inches (50 mm) for handholes, for anchor bolts installed in the field. Use a minimum of two anchors for each cable stanchion.

3.7 INSTALLATION OF HANDHOLES AND BOXES OTHER THAN PRECAST CONCRETE

A. Install handholes and boxes level and plumb and with orientation and depth coordinated with connecting duct, to minimize bends and deflections required for proper entrances. Use box extension if required to match depths of duct, and seal joint between box and extension as recommended by manufacturer.

B. Unless otherwise indicated, support units on a level bed of crushed stone or gravel, graded from 1/2-inch (12.5-mm) sieve to No. 4 (4.75-mm) sieve and compacted to same density as adjacent undisturbed earth.

C. Elevation: In paved areas and trafficways, set cover flush with finished grade. Set covers of other handholes 1 inch (25 mm) above finished grade.

D. Install handholes and boxes with bottom below frost line below grade.

E. Install removable hardware, including pulling eyes, cable stanchions, cable arms, and insulators, as required for installation and support of cables and conductors and as indicated. Select arm lengths to be long enough to provide spare space for future cables, but short enough to preserve adequate working clearances in enclosure.

F. Field cut openings for duct according to enclosure manufacturer's written instructions. Cut wall of enclosure with a tool designed for material to be cut. Size holes for terminating fittings to be used, and seal around penetrations after fittings are installed.

G. For enclosures installed in asphalt paving and subject to occasional, nondeliberate, heavy-vehicle loading, form and pour a concrete ring encircling, and in contact with, enclosure and with top surface screeded to top of box cover frame. Bottom of ring shall rest on compacted earth.

1. Concrete: 3000 psi (20 kPa), 28-day strength, complying with Section 03 3000 "Cast-in-Place Concrete," with a troweled finish.
2. Dimensions: 10 inches wide by 12 inches deep (250 mm wide by 300 mm deep).

3.8 GROUNDING

A. Ground underground ducts and utility structures according to Section 26 0526 "Grounding and Bonding for Electrical Systems."

3.9 FIELD QUALITY CONTROL

A. Perform the following tests and inspections:

1. Demonstrate capability and compliance with requirements on completion of installation of underground duct, duct bank, and utility structures.
2. Pull solid aluminum or wood test mandrel through duct to prove joint integrity and adequate bend radii, and test for out-of-round duct. Provide a minimum 12-inch- (300-mm-) long mandrel equal to duct size minus 1/4 inch (6 mm). If obstructions are indicated, remove obstructions and retest.
3. Test manhole and handhole grounding to ensure electrical continuity of grounding and bonding connections. Measure and report ground resistance as specified in Section 26 0526 "Grounding and Bonding for Electrical Systems."

B. Correct deficiencies and retest as specified above to demonstrate compliance.

C. Prepare test and inspection reports.

3.10 CLEANING

A. Pull leather-washer-type duct cleaner, with graduated washer sizes, through full length of duct until duct cleaner indicates that duct is clear of dirt and debris. Follow with rubber duct swab for final cleaning and to assist in spreading lubricant throughout ducts.

B. Clean internal surfaces of manholes, including sump.

1. Sweep floor, removing dirt and debris.
2. Remove foreign material.

END OF SECTION

SECTION 26 0544

SLEEVES AND SLEEVE SEALS FOR ELECTRICAL RACEWAYS AND CABLING

PART 1 - GENERAL

1.1 RELATED DOCUMENTS

A. Drawings and general provisions of the Contract, including General and Supplementary Conditions and Division 01 Specification Sections, apply to this Section.

1.2 SUMMARY

A. Section Includes:

1. Sleeves for raceway and cable penetration of non-fire-rated construction walls and floors.
2. Sleeve-seal systems.
3. Sleeve-seal fittings.
4. Grout.
5. Silicone sealants.

B. Related Requirements:

1. Section 07 8413 "Penetration Firestopping" for penetration firestopping installed in fire-resistance-rated walls, horizontal assemblies, and smoke barriers, with and without penetrating items.

1.3 ACTION SUBMITTALS

A. Product Data: For each type of product.

PART 2 - PRODUCTS

2.1 SLEEVES

A. Wall Sleeves:

1. Steel Pipe Sleeves: ASTM A 53/A 53M, Type E, Grade B, Schedule 40, zinc coated, plain ends.
2. Cast-Iron Pipe Sleeves: Cast or fabricated "wall pipe," equivalent to ductile-iron pressure pipe, with plain ends and integral waterstop unless otherwise indicated.

B. Sleeves for Conduits Penetrating Non-Fire-Rated Gypsum Board Assemblies: Galvanized-steel sheet; 0.0239-inch minimum thickness; round tube closed with welded longitudinal joint, with tabs for screw-fastening the sleeve to the board.

C. PVC-Pipe Sleeves: ASTM D 1785, Schedule 40.

D. Molded-PVC Sleeves: With nailing flange for attaching to wooden forms.

E. Molded-PE or -PP Sleeves: Removable, tapered-cup shaped, and smooth outer surface with nailing flange for attaching to wooden forms.

F. Sleeves for Rectangular Openings:

1. Material: Galvanized sheet steel.
2. Minimum Metal Thickness:

a. For sleeve cross-section rectangle perimeter less than 50 inches and with no side larger than 16 inches, thickness shall be 0.052 inch.
b. For sleeve cross-section rectangle perimeter 50 inches or more and one or more sides larger than 16 inches, thickness shall be 0.138 inch.

2.2 SLEEVE-SEAL SYSTEMS

A. Description: Modular sealing device, designed for field assembly, to fill annular space between sleeve and raceway or cable.
1. Sealing Elements: EPDM rubber interlocking links shaped to fit surface of pipe. Include type and number required for pipe material and size of pipe.
2. Pressure Plates: Carbon steel.
3. Connecting Bolts and Nuts: Stainless steel of length required to secure pressure plates to sealing elements.

2.3 SLEEVE-SEAL FITTINGS

A. Description: Manufactured plastic, sleeve-type, waterstop assembly made for embedding in concrete slab or wall. Unit shall have plastic or rubber waterstop collar with center opening to match piping OD.

2.4 GROUT

A. Description: Nonshrink; recommended for interior and exterior sealing openings in non-fire-rated walls or floors.

B. Standard: ASTM C 1107/C 1107M, Grade B, post-hardening and volume-adjusting, dry, hydraulic-cement grout.

C. Design Mix: 5000-psi, 28-day compressive strength.

D. Packaging: Premixed and factory packaged.

2.5 SILICONE SEALANTS

A. Silicone Sealants: Single-component, silicone-based, neutral-curing elastomeric sealants of grade indicated below.

1. Grade: Pourable (self-leveling) formulation for openings in floors and other horizontal surfaces that are not fire rated.

B. Silicone Foams: Multicomponent, silicone-based liquid elastomers that, when mixed, expand and cure in place to produce a flexible, nonshrinking foam.

PART 3 - EXECUTION

3.1 SLEEVE INSTALLATION FOR NON-FIRE-RATED ELECTRICAL PENETRATIONS

A. Comply with NECA 1.

B. Comply with NEMA VE 2 for cable tray and cable penetrations.

C. Sleeves for Conduits Penetrating Above-Grade Non-Fire-Rated Concrete and Masonry-Unit Floors and Walls:

1. Interior Penetrations of Non-Fire-Rated Walls and Floors:

a. Seal annular space between sleeve and raceway or cable, using joint sealant appropriate for size, depth, and location of joint. Comply with requirements in Section 07 9200 "Joint Sealants."
b. Seal space outside of sleeves with mortar or grout. Pack sealing material solidly between sleeve and wall so no voids remain. Tool exposed surfaces smooth; protect material while curing.

2. Use pipe sleeves unless penetration arrangement requires rectangular sleeved opening.
3. Size pipe sleeves to provide 1/4-inch annular clear space between sleeve and raceway or cable unless sleeve seal is to be installed or unless seismic criteria require different clearance.
4. Install sleeves for wall penetrations unless core-drilled holes or formed openings are used. Install sleeves during erection of walls. Cut sleeves to length for mounting flush with both surfaces of walls. Deburr after cutting.
5. Install sleeves for floor penetrations. Extend sleeves installed in floors 2 inches above finished floor level. Install sleeves during erection of floors.

D. Sleeves for Conduits Penetrating Non-Fire-Rated Gypsum Board Assemblies:

1. Use circular metal sleeves unless penetration arrangement requires rectangular sleeved opening.
2. Seal space outside of sleeves with approved joint compound for gypsum board assemblies.

E. Roof-Penetration Sleeves: Seal penetration of individual raceways and cables with flexible boot-type flashing units applied in coordination with roofing work.

F. Aboveground, Exterior-Wall Penetrations: Seal penetrations using steel pipe sleeves and mechanical sleeve seals. Select sleeve size to allow for 1-inch annular clear space between pipe and sleeve for installing mechanical sleeve seals.

G. Underground, Exterior-Wall and Floor Penetrations: Install cast-iron pipe sleeves. Size sleeves

to allow for 1-inch annular clear space between raceway or cable and sleeve for installing sleeve-seal system.

3.2 SLEEVE-SEAL-SYSTEM INSTALLATION

A. Install sleeve-seal systems in sleeves in exterior concrete walls and slabs-on-grade at raceway entries into building.

B. Install type and number of sealing elements recommended by manufacturer for raceway or cable material and size. Position raceway or cable in center of sleeve. Assemble mechanical sleeve seals and install in annular space between raceway or cable and sleeve. Tighten bolts against pressure plates that cause sealing elements to expand and make watertight seal.

3.3 SLEEVE-SEAL-FITTING INSTALLATION

A. Install sleeve-seal fittings in new walls and slabs as they are constructed.

B. Assemble fitting components of length to be flush with both surfaces of concrete slabs and walls. Position waterstop flange to be centered in concrete slab or wall.

C. Secure nailing flanges to concrete forms.

D. Using grout, seal the space around outside of sleeve-seal fittings.

END OF SECTION

SECTION 26 0548.16

SEISMIC CONTROLS FOR ELECTRICAL SYSTEMS

PART 1 - GENERAL

1.1 RELATED DOCUMENTS

A. Drawings and general provisions of the Contract, including General and Supplementary Conditions and Division 01 Specification Sections, apply to this Section.

1.2 SUMMARY

A. Section Includes:

1. Restraint channel bracings.
2. Restraint cables.
3. Seismic-restraint accessories.
4. Mechanical anchor bolts.
5. Adhesive anchor bolts.

B. Related Requirements:

1. Section 26 0529 "Hangers and Supports for Electrical Systems" for commonly used electrical supports and installation requirements.

1.3 ACTION SUBMITTALS

A. Product Data: For each type of product.

1. Illustrate and indicate style, material, strength, fastening provision, and finish for each type and size of seismic-restraint component used.

    a. Tabulate types and sizes of seismic restraints, complete with report numbers and rated strength in tension and shear as evaluated by an evaluation service member of ICC-ES.
    b. Annotate to indicate application of each product submitted and compliance with requirements.

B. Delegated-Design Submittal: For each seismic-restraint device.

1. Include design calculations and details for selecting seismic restraints complying with performance requirements, design criteria, and analysis data signed and sealed by the qualified professional engineer responsible for their preparation.
2. Design Calculations: Calculate static and dynamic loading caused by equipment weight, operation, and seismic and wind forces required to select seismic and wind restraints and for designing vibration isolation bases.

a. Coordinate design calculations with wind load calculations required for equipment mounted outdoors. Comply with requirements in other Sections for equipment mounted outdoors.

3. Seismic- and Wind-Restraint Details:

a. Design Analysis: To support selection and arrangement of seismic and wind restraints. Include calculations of combined tensile and shear loads.
b. Details: Indicate fabrication and arrangement. Detail attachments of restraints to the restrained items and to the structure. Show attachment locations, methods, and spacings. Identify components, list their strengths, and indicate directions and values of forces transmitted to the structure during seismic events. Indicate association with vibration isolation devices.
c. Coordinate seismic-restraint and vibration isolation details with wind-restraint details required for equipment mounted outdoors. Comply with requirements in other Sections for equipment mounted outdoors.
d. Preapproval and Evaluation Documentation: By an evaluation service member of ICC-ES, showing maximum ratings of restraint items and the basis for approval (tests or calculations).

1.4 INFORMATIONAL SUBMITTALS

A. Coordination Drawings: Show coordination of seismic bracing for electrical components with other systems and equipment in the vicinity, including other supports and seismic restraints.

B. Qualification Data: For testing agency.

C. Welding certificates.

D. Field quality-control reports.

1.5 QUALITY ASSURANCE

A. Testing Agency Qualifications: An independent agency, with the experience and capability to conduct the testing indicated, that is a nationally recognized testing laboratory as defined by OSHA in 29 CFR 1910.7 and that is acceptable to authorities having jurisdiction.

B. Comply with seismic-restraint requirements in the IBC unless requirements in this Section are more stringent.

C. Welding Qualifications: Qualify procedures and personnel according to AWS D1.1/D1.1M, "Structural Welding Code - Steel."

D. Seismic-restraint devices shall have horizontal and vertical load testing and analysis. They shall bear anchorage preapproval from OSHPD in addition to preapproval, showing maximum seismic-restraint ratings, by ICC-ES or another agency acceptable to authorities having jurisdiction. Ratings based on independent testing are preferred to ratings based on calculations. If preapproved ratings are not available, submittals based on independent testing are preferred. Calculations (including combining shear and tensile loads) that support seismic-restraint designs must be signed and sealed by a qualified professional engineer.

E. Comply with NFPA 70.

PART 2 - PRODUCTS

2.1 PERFORMANCE REQUIREMENTS

A. Wind-Restraint Loading:
   1. Building Classification Category: Refer to Structural Engineer Drawings.
   2. Minimum 10 lb/sq. ft. multiplied by maximum area of HVAC component projected on vertical plane normal to wind direction and 45 degrees either side of normal.

B. Seismic-Restraint Loading:

   1. Site Class as Defined in the IBC: Refer to structural engineer drawings.
   2. Assigned Seismic Use Group or Building Category as Defined in the IBC.

2.2 RESTRAINT CHANNEL BRACINGS

A. Description: MFMA-4, shop- or field-fabricated bracing assembly made of slotted steel channels with accessories for attachment to braced component at one end and to building structure at the other end, with other matching components, and with corrosion-resistant coating; rated in tension, compression, and torsion forces.

2.3 RESTRAINT CABLES

A. Restraint Cables: ASTM A 492 stainless-steel cables. End connections made of steel assemblies with thimbles, brackets, swivel, and bolts designed for restraining cable service; with a minimum of two clamping bolts for cable engagement.

2.4 SEISMIC-RESTRAINT ACCESSORIES

A. Hanger-Rod Stiffener: Steel tube or steel slotted-support-system sleeve with internally bolted connections to hanger rod.

B. Hinged and Swivel Brace Attachments: Multifunctional steel connectors for attaching hangers to rigid channel bracings and restraint cables.

C. Bushings for Floor-Mounted Equipment Anchor Bolts: Neoprene bushings designed for rigid equipment mountings and matched to type and size of anchor bolts and studs.

D. Bushing Assemblies for Wall-Mounted Equipment Anchorage: Assemblies of neoprene elements and steel sleeves designed for rigid equipment mountings and matched to type and size of attachment devices used.

E. Resilient Isolation Washers and Bushings: One-piece, molded, oil- and water-resistant neoprene, with a flat washer face.

2.5 MECHANICAL ANCHOR BOLTS

A. Mechanical Anchor Bolts: Drilled-in and stud-wedge or female-wedge type in zinc-coated steel for interior applications and stainless steel for exterior applications. Select anchor bolts with strength required for anchor and as tested according to ASTM E 488.

2.6 ADHESIVE ANCHOR BOLTS

A. Adhesive Anchor Bolts: Drilled-in and capsule anchor system containing PVC or urethane methacrylate-based resin and accelerator, or injected polymer or hybrid mortar adhesive. Provide anchor bolts and hardware with zinc-coated steel for interior applications and stainless steel for exterior applications. Select anchor bolts with strength required for anchor and as tested according to ASTM E 488.

PART 3 - EXECUTION

3.1 EXAMINATION

A. Examine areas and equipment to receive vibration isolation and seismic-control devices for compliance with requirements for installation tolerances and other conditions affecting performance of the Work.

B. Examine roughing-in for reinforcement and cast-in-place anchors to verify actual locations before installation.

C. Proceed with installation only after unsatisfactory conditions have been corrected.

3.2 APPLICATIONS

A. Multiple Raceways or Cables: Secure raceways and cables to trapeze member with clamps approved for application by an evaluation service member of ICC-ES.

B. Hanger-Rod Stiffeners: Install hanger-rod stiffeners where indicated or scheduled on Drawings to receive them and where required to prevent buckling of hanger rods caused by seismic forces.

C. Strength of Support and Seismic-Restraint Assemblies: Where not indicated, select sizes of components so strength will be adequate to carry present and future static and seismic loads within specified loading limits.

3.3 SEISMIC-RESTRAINT DEVICE INSTALLATION

A. Coordinate the location of embedded connection hardware with supported equipment attachment and mounting points and with requirements for concrete reinforcement and formwork specified in Section 03 3000 "Cast-in-Place Concrete."

B. Equipment and Hanger Restraints:

1. Install resilient, bolt-isolation washers on equipment anchor bolts where clearance between anchor and adjacent surface exceeds 0.125 inch.
2. Install seismic-restraint devices using methods approved by an evaluation service member of ICC-ES providing required submittals for component.

C. Install cables so they do not bend across edges of adjacent equipment or building structure.

D. Install bushing assemblies for mounting bolts for wall-mounted equipment, arranged to provide resilient media where equipment or equipment-mounting channels are attached to wall.

E. Attachment to Structure: If specific attachment is not indicated, anchor bracing to structure at flanges of beams, at upper truss chords of bar joists, or at concrete members.

F. Drilled-in Anchors:

1. Identify position of reinforcing steel and other embedded items prior to drilling holes for anchors. Do not damage existing reinforcing or embedded items during coring or drilling. Notify the structural engineer if reinforcing steel or other embedded items are encountered during drilling. Locate and avoid prestressed tendons, electrical and telecommunications conduit, and gas lines.
2. Do not drill holes in concrete or masonry until concrete, mortar, or grout has achieved full design strength.
3. Wedge Anchors: Protect threads from damage during anchor installation. Heavy-duty sleeve anchors shall be installed with sleeve fully engaged in the structural element to which anchor is to be fastened.
4. Adhesive Anchors: Clean holes to remove loose material and drilling dust prior to installation of adhesive. Place adhesive in holes proceeding from the bottom of the hole and progressing toward the surface in such a manner as to avoid introduction of air pockets in the adhesive.
5. Set anchors to manufacturer's recommended torque using a torque wrench.
6. Install zinc-coated steel anchors for interior and stainless-steel anchors for exterior applications.

3.4 ACCOMMODATION OF DIFFERENTIAL SEISMIC MOTION

A. Install flexible connections in runs of raceways, cables, wireways, cable trays, and busways where they cross seismic joints, where adjacent sections or branches are supported by different structural elements, and where connection is terminated to equipment that is anchored to a different structural element from the one supporting them as they approach equipment.

3.5 FIELD QUALITY CONTROL

A. Testing Agency: Engage a qualified testing agency to perform tests and inspections.

B. Perform the following tests and inspections with the assistance of a factory-authorized service representative:

1. Provide evidence of recent calibration of test equipment by a testing agency acceptable to authorities having jurisdiction.
2. Schedule test with Owner, through Architect, before connecting anchorage device to restrained component (unless postconnection testing has been approved), and with at least seven days' advance notice.
3. Obtain Architect's approval before transmitting test loads to structure. Provide temporary load-spreading members.
4. Test at least four of each type and size of installed anchors and fasteners selected by Architect.
5. Test to 90 percent of rated proof load of device.

C. Seismic controls will be considered defective if they do not pass tests and inspections.

D. Prepare test and inspection reports.

3.6 ADJUSTING

A. Adjust restraints to permit free movement of equipment within normal mode of operation.

END OF SECTION

SECTION 26 0553

IDENTIFICATION FOR ELECTRICAL SYSTEMS

PART 1 - GENERAL

1.1 RELATED DOCUMENTS

A. Drawings and general provisions of the Contract, including General and Supplementary Conditions and Division 01 Specification Sections, apply to this Section.

1.2 SUMMARY

A. Section Includes:

1. Color and legend requirements for raceways, conductors, and warning labels and signs.
2. Labels.
3. Bands and tubes.
4. Tapes and stencils.
5. Tags.
6. Signs.
7. Cable ties.
8. Paint for identification.
9. Fasteners for labels and signs.

1.3 ACTION SUBMITTALS

A. Product Data: For each type of product.

1. Include construction details, material descriptions, dimensions of individual components and profiles, and finishes for electrical identification products.

B. Identification Schedule: For each piece of electrical equipment and electrical system components to be an index of nomenclature for electrical equipment and system components used in identification signs and labels. Use same designations indicated on Drawings.

C. Delegated-Design Submittal: For arc-flash hazard study.

PART 2 - PRODUCTS

2.1 PERFORMANCE REQUIREMENTS

A. Comply with ASME A13.1 and IEEE C2.

B. Comply with NFPA 70.

C. Comply with 29 CFR 1910.144 and 29 CFR 1910.145.

D. Comply with ANSI Z535.4 for safety signs and labels.

E. Comply with NFPA 70E and Section 26 0574 "Overcurrent Protective Device Arc-Flash Study" requirements for arc-flash warning labels.

F. Adhesive-attached labeling materials, including label stocks, laminating adhesives, and inks used by label printers, shall comply with UL 969.

G. Thermal Movements: Allow for thermal movements from ambient and surface temperature changes.

1. Temperature Change: 120 deg F, ambient; 180 deg F, material surfaces.

2.2 COLOR AND LEGEND REQUIREMENTS

A. Raceways and Cables Carrying Circuits at 600 V or Less:

1. Black letters on an orange field.
2. Legend: Indicate voltage and system or service type.

B. Color-Coding for Phase- and Voltage-Level Identification, 600 V or Less: Use colors listed below for ungrounded service, feeder, and branch-circuit conductors.

1. Color shall be factory applied or field applied for sizes larger than No. 8 AWG if authorities having jurisdiction permit.
2. Colors for 208/120-V Circuits:

a. Phase A: Black.
b. Phase B: Red.
c. Phase C: Blue.

3. Colors for 240-V Circuits:

a. Phase A: Black.
b. Phase B: Red.

4. Colors for 480/277-V Circuits:

a. Phase A: Brown.
b. Phase B: Orange.
c. Phase C: Yellow.

5. Color for Neutral: White.
6. Color for Equipment Grounds: Green.
7. Colors for Isolated Grounds: Green with white stripe.

C. Raceways and Cables Carrying Circuits at More Than 600 V:

1. Black letters on an orange field.
2. Legend: "DANGER - CONCEALED HIGH VOLTAGE WIRING."

D. Warning Label Colors:

1. Identify system voltage with black letters on an orange background.

E. Warning labels and signs shall include, but are not limited to, the following legends:

1. Multiple Power Source Warning: "DANGER - ELECTRICAL SHOCK HAZARD - EQUIPMENT HAS MULTIPLE POWER SOURCES."
2. Workspace Clearance Warning: "WARNING - OSHA REGULATION - AREA IN FRONT OF ELECTRICAL EQUIPMENT MUST BE KEPT CLEAR FOR 36 INCHES."

F. Equipment Identification Labels:

1. Black letters on a white field.

2.3 LABELS

A. Self-Adhesive Labels: Vinyl, thermal, transfer-printed, 3-mil-thick, multicolor, weather- and UV-resistant, pressure-sensitive adhesive labels, configured for intended use and location.
1. Minimum Nominal Size:

a. 1-1/2 by 6 inchesfor raceway and conductors.
b. 3-1/2 by 5 inchesfor equipment.
c. As required by authorities having jurisdiction.

2.4 TAPES AND STENCILS

A. Marker Tapes: Vinyl or vinyl-cloth, self-adhesive wraparound type, with circuit identification legend machine printed by thermal transfer or equivalent process.

B. Self-Adhesive Vinyl Tape: Colored, heavy duty, waterproof, fade resistant; not less than 3 mils thick by 1 to 2 inches wide; compounded for outdoor use.

C. Tape and Stencil: 4-inch-wide black stripes on 10-inch centers placed diagonally over orange background and is 12 inches wide. Stop stripes at legends.

D. Floor Marking Tape: 2-inch-wide, 5-mil pressure-sensitive vinyl tape, with black and white stripes and clear vinyl overlay.

E. Underground-Line Warning Tape:
1. Tape:

a. Recommended by manufacturer for the method of installation and suitable to identify and locate underground electrical and communications utility lines.
b. Printing on tape shall be permanent and shall not be damaged by burial operations.
c. Tape material and ink shall be chemically inert and not subject to degradation when exposed to acids, alkalis, and other destructive substances commonly found in soils.

2. Color and Printing:

a. Comply with ANSI Z535.1, ANSI Z535.2, ANSI Z535.3, ANSI Z535.4, and ANSI Z535.5.
b. Inscriptions for Red-Colored Tapes: "ELECTRIC LINE, HIGH VOLTAGE".

c. Inscriptions for Orange-Colored Tapes: "TELEPHONE CABLE, CATV CABLE, COMMUNICATIONS CABLE, OPTICAL FIBER CABLE".

2.5 TAGS

A. Metal Tags: Brass or aluminum, 2 by 2 by 0.05 inch, with stamped legend, punched for use with self-locking cable tie fastener.

B. Nonmetallic Preprinted Tags: Polyethylene tags, 0.015 inch thick, color-coded for phase and voltage level, with factory printed permanent designations; punched for use with self-locking cable tie fastener.

1.

2.6 SIGNS

A. Baked-Enamel Signs:
1. Preprinted aluminum signs, high-intensity reflective, punched or drilled for fasteners, with colors, legend, and size required for application.
2. 1/4-inch grommets in corners for mounting.
3. Nominal Size: 7 by 10 inches.

B. Laminated Acrylic or Melamine Plastic Signs:
1. Engraved legend.
2. Thickness:

a. For signs up to 20 sq. in., minimum 1/16 inch thick.
b. For signs larger than 20 sq. in., 1/8 inch thick.
c. Engraved legend with black letters on white face.
d. Framed with mitered acrylic molding and arranged for attachment at applicable equipment.

2.7 CABLE TIES

A. General-Purpose Cable Ties: Fungus inert, self-extinguishing, one piece, self-locking, and Type 6/6 nylon.

1. Minimum Width: 3/16 inch.
2. Tensile Strength at 73 Deg F according to ASTM D 638: 12,000 psi.
3. Temperature Range: Minus 40 to plus 185 deg F.
4. Color: Black, except where used for color-coding.

B. UV-Stabilized Cable Ties: Fungus inert, designed for continuous exposure to exterior sunlight, self-extinguishing, one piece, self-locking, and Type 6/6 nylon.

1. Minimum Width: 3/16 inch.
2. Tensile Strength at 73 Deg F according to ASTM D 638: 12,000 psi.
3. Temperature Range: Minus 40 to plus 185 deg F.
4. Color: Black.

C. Plenum-Rated Cable Ties: Self-extinguishing, UV stabilized, one piece, and self-locking.

1. Minimum Width: 3/16 inch.
2. Tensile Strength at 73 Deg F according to ASTM D 638: 7000 psi.
3. UL 94 Flame Rating: 94V-0.
4. Temperature Range: Minus 50 to plus 284 deg F.
5. Color: Black.

2.8 MISCELLANEOUS IDENTIFICATION PRODUCTS

A. Paint: Comply with requirements in painting Sections for paint materials and application requirements. Retain paint system applicable for surface material and location (exterior or interior).

B. Fasteners for Labels and Signs: Self-tapping, stainless-steel screws or stainless-steel machine screws with nuts and flat and lock washers.

PART 3 - EXECUTION

3.1 PREPARATION

A. Self-Adhesive Identification Products: Before applying electrical identification products, clean substrates of substances that could impair bond, using materials and methods recommended by manufacturer of identification product.

3.2 INSTALLATION

A. Verify and coordinate identification names, abbreviations, colors, and other features with requirements in other Sections requiring identification applications, Drawings, Shop Drawings, manufacturer's wiring diagrams, and operation and maintenance manual. Use consistent designations throughout Project.

B. Install identifying devices before installing acoustical ceilings and similar concealment.

C. Verify identity of each item before installing identification products.

D. Coordinate identification with Project Drawings, manufacturer's wiring diagrams, and operation and maintenance manual.

E. Apply identification devices to surfaces that require finish after completing finish work.

F. Install signs with approved legend to facilitate proper identification, operation, and maintenance of electrical systems and connected items.

G. System Identification for Raceways and Cables under 600 V: Identification shall completely encircle cable or conduit. Place identification of two-color markings in contact, side by side.

1. Secure tight to surface of conductor, cable, or raceway.

H. System Identification for Raceways and Cables over 600 V: Identification shall completely encircle cable or conduit. Place adjacent identification of two-color markings in contact, side by side.

1. Secure tight to surface of conductor, cable, or raceway.

I. Auxiliary Electrical Systems Conductor Identification: Identify field-installed alarm, control, and signal connections.

J. Emergency Operating Instruction Signs: Install instruction signs with white legend on a red background with minimum 3/8-inch-high letters for emergency instructions at equipment used for power transfer.

K. Elevated Components: Increase sizes of labels, signs, and letters to those appropriate for viewing from the floor.

L. Accessible Fittings for Raceways: Identify the covers of each junction and pull box of the following systems with the wiring system legend and system voltage. System legends shall be as follows:

1. "EMERGENCY POWER."
2. "POWER."
3. "UPS."

M. Vinyl Wraparound Labels:

1. Secure tight to surface of raceway or cable at a location with high visibility and accessibility.
2. Attach labels that are not self-adhesive type with clear vinyl tape, with adhesive appropriate to the location and substrate.

N. Snap-around Labels: Secure tight to surface at a location with high visibility and accessibility.

O. Self-Adhesive Wraparound Labels: Secure tight to surface at a location with high visibility and accessibility.

P. Self-Adhesive Labels:

1. On each item, install unique designation label that is consistent with wiring diagrams, schedules, and operation and maintenance manual.
2. Unless otherwise indicated, provide a single line of text with 1/2-inch-high letters on 1-1/2-inch-high label; where two lines of text are required, use labels 2 inches high.

Q. Snap-around Color-Coding Bands: Secure tight to surface at a location with high visibility and accessibility.

R. Heat-Shrink, Preprinted Tubes: Secure tight to surface at a location with high visibility and accessibility.

S. Marker Tapes: Secure tight to surface at a location with high visibility and accessibility.

T. Self-Adhesive Vinyl Tape: Secure tight to surface at a location with high visibility and accessibility.

1. Field-Applied, Color-Coding Conductor Tape: Apply in half-lapped turns for a minimum distance of 6 inches where splices or taps are made. Apply last two turns of tape with no tension to prevent possible unwinding.

U. Tape and Stencil: Comply with requirements in painting Sections for surface preparation and paint application.

V. Floor Marking Tape: Apply stripes to finished surfaces following manufacturer's written instructions.

W. Underground Line Warning Tape:

1. During backfilling of trenches, install continuous underground-line warning tape directly above cable or raceway at 6 to 8 inches below finished grade. Use multiple tapes where width of multiple lines installed in a common trench or concrete envelope exceeds 16 inches overall.
2. Limit use of underground-line warning tape to direct-buried cables.
3. Install underground-line warning tape for direct-buried cables and cables in raceways.

X. Baked-Enamel Signs:

1. Attach signs that are not self-adhesive type with mechanical fasteners appropriate to the location and substrate.
2. Unless otherwise indicated, provide a single line of text with 1/2-inch-high letters on minimum 1-1/2-inch-high sign; where two lines of text are required, use signs minimum 2 inches high.

Y. Metal-Backed Butyrate Signs:

1. Attach signs that are not self-adhesive type with mechanical fasteners appropriate to the location and substrate.
2. Unless otherwise indicated, provide a single line of text with 1/2-inch-high letters on 1-1/2-inch-high sign; where two lines of text are required, use labels 2 inches high.

Z. Laminated Acrylic or Melamine Plastic Signs:

1. Attach signs that are not self-adhesive type with mechanical fasteners appropriate to the location and substrate.
2. Unless otherwise indicated, provide a single line of text with 1/2-inch-high letters on 1-1/2-inch-high sign; where two lines of text are required, use labels 2 inches high.

AA. Cable Ties: General purpose, for attaching tags, except as listed below:

1. Outdoors: UV-stabilized nylon.
2. In Spaces Handling Environmental Air: Plenum rated.

3.3 IDENTIFICATION SCHEDULE

A. Install identification materials and devices at locations for most convenient viewing without interference with operation and maintenance of equipment. Install access doors or panels to provide view of identifying devices.

B. Identify conductors, cables, and terminals in enclosures and at junctions, terminals, pull points, and locations of high visibility. Identify by system and circuit designation.

C. Concealed Raceways, Duct Banks, More Than 600 V, within Buildings: Tape and stencil. Stencil legend "DANGER - CONCEALED HIGH-VOLTAGE WIRING" with 3-inch-high, black letters on 20-inch centers.

1. Locate identification at changes in direction, at penetrations of walls and floors, and at 10-foot maximum intervals.

D. Accessible Raceways, Armored and Metal-Clad Cables, More Than 600 V: Self-adhesive labels.

1. Locate identification at changes in direction, at penetrations of walls and floors, at 50-foot maximum intervals in straight runs, and at 25-foot maximum intervals in congested areas.

E. Accessible Raceways and Metal-Clad Cables, 600 V or Less, for Service, Feeder, and Branch Circuits, More Than 20 A and 120 V to Ground: Identify with self-adhesive raceway labels.

1. Locate identification at changes in direction, at penetrations of walls and floors, at 50-foot maximum intervals in straight runs, and at 25-foot maximum intervals in congested areas.

F. Accessible Fittings for Raceways and Cables within Buildings: Identify the covers of each junction and pull box of the following systems with self-adhesive labels containing the wiring system legend and system voltage. System legends shall be as follows:

1. "EMERGENCY POWER."
2. "POWER."
3. "UPS."

G. Power-Circuit Conductor Identification, 600 V or Less: For conductors in vaults, pull and junction boxes, manholes, and handholes, use self-adhesive wraparound labels to identify the phase.

1. Locate identification at changes in direction, at penetrations of walls and floors, at 50-foot maximum intervals in straight runs, and at 25-foot maximum intervals in congested areas.

H. Conductors to Be Extended in the Future: Attach write-on tags to conductors and list source.

I. Locations of Underground Lines: Underground-line warning tape for power, lighting, communication, and control wiring and optical-fiber cable.

J. Concealed Raceways and Duct Banks, More Than 600 V, within Buildings: Apply floor marking tape to the following finished surfaces:

1. Floor surface directly above conduits running beneath and within 12 inches of a floor that is in contact with earth or is framed above unexcavated space.
2. Wall surfaces directly external to raceways concealed within wall.
3. Accessible surfaces of concrete envelope around raceways in vertical shafts, exposed in the building, or concealed above suspended ceilings.

K. Workspace Indication: Apply floor marking tape to finished surfaces. Show working clearances in the direction of access to live parts. Workspace shall comply with NFPA 70 and 29 CFR 1926.403 unless otherwise indicated. Do not install at flush-mounted panelboards and similar equipment in finished spaces.

L. Instructional Signs: Self-adhesive labels, including the color code for grounded and ungrounded conductors.

M. Warning Labels for Indoor Cabinets, Boxes, and Enclosures for Power and Lighting: Self-adhesive labels.

1. Apply to exterior of door, cover, or other access.
2. For equipment with multiple power or control sources, apply to door or cover of equipment, including, but not limited to, the following:

    a. Power-transfer switches.
    b. Controls with external control power connections.

N. Arc Flash Warning Labeling: Self-adhesive labels.

O. Equipment Identification Labels:

1. Indoor Equipment: Self-adhesive label.
2. Outdoor Equipment: Laminated acrylic or melamine sign.
3. Equipment to Be Labeled:

    a. Panelboards: Typewritten directory of circuits in the location provided by panelboard manufacturer. Panelboard identification shall be in the form of a self-adhesive, engraved, laminated acrylic or melamine label.
    b. Enclosures and electrical cabinets.
    c. Access doors and panels for concealed electrical items.
    d. Switchgear.
    e. Switchboards.
    f. Transformers: Label that includes tag designation indicated on Drawings for the transformer, feeder, and panelboards or equipment supplied by the secondary.
    g. Substations.
    h. Emergency system boxes and enclosures.
    i. Motor-control centers.
    j. Enclosed switches.
    k. Enclosed circuit breakers.
    l. Enclosed controllers.
    m. Variable-speed controllers.
    n. Push-button stations.
    o. Power-transfer equipment.
    p. Contactors.
    q. Remote-controlled switches, dimmer modules, and control devices.
    r. Battery-inverter units.
    s. Battery racks.
    t. Power-generating units.
    u. Monitoring and control equipment.
    v. UPS equipment.
    w. Generator Grounding Method for switched or un-switched neutral conductor.

END OF SECTION

SECTION 26 0574

OVERCURRENT PROTECTIVE DEVICE ARC-FLASH STUDY

PART 1 - GENERAL

1.1 RELATED DOCUMENTS

A. Drawings and general provisions of the Contract, including General and Supplementary Conditions and Division 01 Specification Sections, apply to this Section.

1.2 SUMMARY

A. Section includes a computer-based, arc-flash study to determine the arc-flash hazard distance and the incident energy to which personnel could be exposed during work on or near electrical equipment.

1.3 DEFINITIONS

A. Existing to Remain: Existing items of construction that are not to be removed and that are not otherwise indicated to be removed, removed and salvaged, or removed and reinstalled.

B. One-Line Diagram: A diagram which shows, by means of single lines and graphic symbols, the course of an electric circuit or system of circuits and the component devices or parts used therein.

C. Protective Device: A device that senses when an abnormal current flow exists and then removes the affected portion from the system.

D. SCCR: Short-circuit current rating.

E. Service: The conductors and equipment for delivering electric energy from the serving utility to the wiring system of the premises served.

1.4 ACTION SUBMITTALS

A. Product Data: For computer software program to be used for studies.

B. Other Action Submittals: Submit the following submittals after the approval of system protective devices submittals. Submittals shall be in digital form.
   1. Arc-flash study input data, including completed computer program input data sheets.
   2. Arc-flash study report; signed, dated, and sealed by a qualified professional engineer.
      a. Submit study report for action prior to receiving final approval of the distribution equipment submittals. If formal completion of studies will cause delay in equipment manufacturing, obtain approval from Architect for preliminary submittal of sufficient study data to ensure that the selection of devices and associated characteristics is satisfactory.

1.5 INFORMATIONAL SUBMITTALS

A. Qualification Data: For Arc-Flash Study Specialist.

B. Product Certificates: For arc-flash hazard analysis software, certifying compliance with IEEE 1584 and NFPA 70E.

1.6 CLOSEOUT SUBMITTALS

A. Maintenance procedures according to requirements in NFPA 70E shall be provided in the equipment manuals.

B. Operation and Maintenance Procedures: In addition to items specified in Section 01 7823 "Operation and Maintenance Data," provide maintenance procedures for use by Owner's personnel that comply with requirements in NFPA 70E.

1.7 QUALITY ASSURANCE

A. Studies shall use computer programs that are distributed nationally and are in wide use. Software algorithms shall comply with requirements of standards and guides specified in this Section. Manual calculations are unacceptable.

B. Arc-Flash Study Software Developer Qualifications: An entity that owns and markets computer software used for studies, having performed successful studies of similar magnitude on electrical distribution systems using similar devices.
   1. The computer program shall be developed under the charge of a licensed professional engineer who holds IEEE Computer Society's Certified Software Development Professional certification.

C. Arc-Flash Study Specialist Qualifications: Professional engineer in charge of performing the study, analyzing the arc flash, and documenting recommendations, licensed in the state where Project is located. All elements of the study shall be performed under the direct supervision and control of this professional engineer.

D. Field Adjusting Agency Qualifications: An independent agency, with the experience and capability to adjust overcurrent devices and to conduct the testing indicated, that is a member company of the InterNational Electrical Testing Association or is a nationally recognized testing laboratory (NRTL) as defined by OSHA in 29 CFR 1910.7, and that is acceptable to authorities having jurisdiction.

PART 2 - PRODUCTS

2.1 COMPUTER SOFTWARE DEVELOPERS

A. Software Developers: Subject to compliance with requirements, available software developers offering software that may be used for the Work include, but are not limited to, the following:
   1. ESA Inc.
   2. Operation Technology, Inc.
   3. Power Analytics, Corporation.
   4. SKM Systems Analysis, Inc.

B. Comply with IEEE 1584 and NFPA 70E.

C. Analytical features of device coordination study computer software program shall have the capability to calculate "mandatory," "very desirable," and "desirable" features as listed in IEEE 399.

2.2 ARC-FLASH STUDY REPORT CONTENT

A. Executive summary.

B. Study descriptions, purpose, basis and scope.

C. One-line diagram, showing the following:
   1. Protective device designations and ampere ratings.
   2. Cable size and lengths.
   3. Transformer kilovolt ampere (kVA) and voltage ratings.
   4. Motor and generator designations and kVA ratings.
   5. Switchgear, switchboard, motor-control center and panelboard designations.

D. Study Input Data: As described in "Power System Data" Article.

E. Short-Circuit Study Output: As specified in "Short Circuit Study Output" Paragraph in "Short-Circuit Study Report Contents" Article in Section 26 0572 "Overcurrent Protective Device Short-Circuit Study."

F. Protective Device Coordination Study Report Contents: As specified in "Protective Device Coordination Study Report Contents" Article in Section 26 0573 "Overcurrent Protective Device Coordination Study."

G. Arc-Flash Study Output:
   1. Interrupting Duty Report: Three-phase and unbalanced fault calculations, showing the following for each overcurrent device location:
      a. Voltage.
      b. Calculated symmetrical fault-current magnitude and angle.
      c. Fault-point X/R ratio.
      d. No AC Decrement (NACD) ratio.
      e. Equivalent impedance.
      f. Multiplying factors for 2-, 3-, 5-, and 8-cycle circuit breakers rated on a symmetrical basis.
      g. Multiplying factors for 2-, 3-, 5-, and 8-cycle circuit breakers rated on a total basis.

H. Incident Energy and Flash Protection Boundary Calculations:
   1. Arcing fault magnitude.
   2. Protective device clearing time.
   3. Duration of arc.
   4. Arc-flash boundary.
   5. Working distance.
   6. Incident energy.
   7. Hazard risk category.
   8. Recommendations for arc-flash energy reduction.

I. Fault study input data, case descriptions, and fault-current calculations including a definition of

terms and guide for interpretation of the computer printout.

2.3 ARC-FLASH WARNING LABELS

A. Comply with requirements in Section 26 0553 "Identification for Electrical Systems." Produce a 3.5-by-5-inch thermal transfer label of high-adhesion polyester for each work location included in the analysis.

B. The label shall have an orange header with the wording, "WARNING, ARC-FLASH HAZARD," and shall include the following information taken directly from the arc-flash hazard analysis:
   1. Location designation.
   2. Nominal voltage.
   3. Flash protection boundary.
   4. Hazard risk category.
   5. Incident energy.
   6. Working distance.
   7. Engineering report number, revision number, and issue date.

C. Labels shall be machine printed, with no field-applied markings.

PART 3 - EXECUTION

3.1 EXAMINATION

A. Examine Project overcurrent protective device submittals. Proceed with arc-flash study only after relevant equipment submittals have been assembled. Overcurrent protective devices that have not been submitted and approved prior to arc-flash study may not be used in study.

3.2 ARC-FLASH HAZARD ANALYSIS

A. Comply with NFPA 70E and its Annex D for hazard analysis study.

B. Preparatory Studies:
   1. Short-Circuit Study Output: As specified in "Short-Circuit Study Output" Paragraph in "Short-Circuit Study Report Contents" Article in Section 26 0572 "Overcurrent Protective Device Short-Circuit Study."
   2. Protective Device Coordination Study Report Contents: As specified in "Protective Device Coordination Study Report Contents" Article in Section 26 0573 "Overcurrent Protective Device Coordination Study."

C. Calculate maximum and minimum contributions of fault-current size.
   1. The minimum calculation shall assume that the utility contribution is at a minimum and shall assume no motor load.
   2. The maximum calculation shall assume a maximum contribution from the utility and shall assume motors to be operating under full-load conditions.

D. Calculate the arc-flash protection boundary and incident energy at locations in the electrical distribution system where personnel could perform work on energized parts.

E. Include medium- and low-voltage equipment locations, except equipment rated 240-V ac or less

fed from transformers less than 125 kVA.

F. Safe working distances shall be specified for calculated fault locations based on the calculated arc-flash boundary, considering incident energy of 1.2 cal/sq.cm.

G. Incident energy calculations shall consider the accumulation of energy over time when performing arc-flash calculations on buses with multiple sources. Iterative calculations shall take into account the changing current contributions, as the sources are interrupted or decremented with time. Fault contribution from motors and generators shall be decremented as follows:
   1. Fault contribution from induction motors should not be considered beyond three to five cycles.
   2. Fault contribution from synchronous motors and generators should be decayed to match the actual decrement of each as closely as possible (e.g., contributions from permanent magnet generators will typically decay from 10 per unit to three per unit after 10 cycles).

H. Arc-flash computation shall include both line and load side of a circuit breaker as follows:
   1. When the circuit breaker is in a separate enclosure.
   2. When the line terminals of the circuit breaker are separate from the work location.

I. Base arc-flash calculations on actual overcurrent protective device clearing time. Cap maximum clearing time at two seconds based on IEEE 1584, Section B.1.2.

3.3 POWER SYSTEM DATA

A. Obtain all data necessary for the conduct of the arc-flash hazard analysis.
   1. Verify completeness of data supplied on the one-line diagram on Drawings. Call discrepancies to the attention of Engineer.
   2. For new equipment, use characteristics submitted under the provisions of action submittals and information submittals for this Project.
   3. For existing equipment, whether or not relocated, obtain required electrical distribution system data by field investigation and surveys, conducted by qualified technicians and engineers.

B. Electrical Survey Data: Gather and tabulate the following input data to support study. Comply with recommendations in IEEE 1584 and NFPA 70E as to the amount of detail that is required to be acquired in the field. Field data gathering shall be under the direct supervision and control of the engineer in charge of performing the study, and shall be by the engineer or its representative who holds NETA ETT Level III certification or NICET Electrical Power Testing Level III certification.
   1. Product Data for overcurrent protective devices specified in other Sections and involved in overcurrent protective device coordination studies. Use equipment designation tags that are consistent with electrical distribution system diagrams, overcurrent protective device submittals, input and output data, and recommended device settings.
   2. Obtain electrical power utility impedance at the service.
   3. Power sources and ties.
   4. Short-circuit current at each system bus, three phase and line-to-ground.
   5. Full-load current of all loads.
   6. Voltage level at each bus.
   7. For transformers, include kVA, primary and secondary voltages, connection type, impedance, X/R ratio, taps measured in per cent, and phase shift.
   8. For reactors, provide manufacturer and model designation, voltage rating and impedance.
   9. For circuit breakers and fuses, provide manufacturer and model designation. List type of breaker, type of trip and available range of settings, SCCR, current rating, and breaker

settings.

10. Generator short-circuit current contribution data, including short-circuit reactance, rated kVA, rated voltage, and X/R ratio.
11. For relays, provide manufacturer and model designation, current transformer ratios, potential transformer ratios, and relay settings.
12. Busway manufacturer and model designation, current rating, impedance, lengths, and conductor material.
13. Motor horsepower and NEMA MG 1 code letter designation.
14. Low-voltage cable sizes, lengths, number, conductor material and conduit material (magnetic or nonmagnetic).
15. Medium-voltage cable sizes, lengths, conductor material, and cable construction and metallic shield performance parameters.

3.4 LABELING

A. Apply one arc-flash label for 600-V ac, 480-V ac, and applicable 208-V ac panelboards and disconnects and for each of the following locations:
   1. Motor-control center.
   2. Low-voltage switchboard.
   3. Switchgear.
   4. Medium-voltage switch.
   5. Control panel.

3.5 APPLICATION OF WARNING LABELS

A. Install the arc-fault warning labels under the direct supervision and control of the Arc-Flash Study Specialist.

3.6 DEMONSTRATION

A. Engage the Arc-Flash Study Specialist to train Owner's maintenance personnel in the potential arc-flash hazards associated with working on energized equipment and the significance of the arc-flash warning labels.

END OF SECTION

SECTION 26 0923

LIGHTING CONTROL DEVICES

PART 1 - GENERAL

1.1 RELATED DOCUMENTS

A. Drawings and general provisions of the Contract, including General and Supplementary Conditions and Division 01 Specification Sections, apply to this Section.

1.2 SUMMARY

A. Section Includes:

1. Time switches.
2. Photoelectric switches.
3. Standalone daylight-harvesting switching and dimming controls.
4. Indoor occupancy and vacancy sensors.
5. Switchbox-mounted occupancy sensors.
6. Digital timer light switches.
7. High-bay occupancy sensors.
8. Extreme temperature occupancy sensors.
9. Outdoor motion sensors.
10. Lighting contactors.
11. Emergency shunt relays.

B. Related Requirements:

1. Section 26 2726 "Wiring Devices" for wall-box dimmers, non-networkable wall-switch occupancy sensors, and manual light switches.

1.3 ACTION SUBMITTALS

A. Product Data: For each type of product.

B. Shop Drawings:

1. Show installation details for the following:

a. Occupancy sensors: Include shop drawings with a coverage map.
b. Vacancy sensors. Include shop drawings with a coverage map.

2. Interconnection diagrams showing field-installed wiring.
3. Include diagrams for power, signal, and control wiring.

1.4 INFORMATIONAL SUBMITTALS

A. Coordination Drawings: Reflected ceiling plan(s) and elevations, drawn to scale, on which the following items are shown and coordinated with each other, using input from installers of the items involved:

1. Suspended ceiling components.
2. Structural members to which equipment will be attached.
3. Items penetrating finished ceiling, including the following:

    a. Luminaires.
    b. Air outlets and inlets.
    c. Speakers.
    d. Sprinklers.
    e. Access panels.
    f. Control modules.

B. Field quality-control reports.

C. Sample Warranty: For manufacturer's warranties.

1.5 CLOSEOUT SUBMITTALS

A. Operation and Maintenance Data: For each type of lighting control device to include in operation and maintenance manuals.

1.6 WARRANTY

A. Manufacturer's Warranty: Manufacturer and Installer agree to repair or replace lighting control devices that fail(s) in materials or workmanship within specified warranty period.

1. Failures include, but are not limited to, the following:

    a. Faulty operation of lighting control software.
    b. Faulty operation of lighting control devices.

2. Warranty Period: Two year(s) from date of Substantial Completion.

PART 2 - PRODUCTS

2.1 TIME SWITCHES

A. Electronic Time Switches: Solid state, programmable, with alphanumeric display; complying with UL 917.

1. Listed and labeled as defined in NFPA 70 and marked for intended location and application.
2. Programs: Eight on-off set points on a 24-hour schedule and an annual holiday schedule that overrides the weekly operation on holidays.
3. Circuitry: Allow connection of a photoelectric relay as substitute for on-off function of a program on selected channels.

4. Astronomic Time: All channels.
5. Automatic daylight savings time changeover.
6. Battery Backup: Not less than seven days reserve, to maintain schedules and time clock.

2.2 OUTDOOR PHOTOELECTRIC SWITCHES

A. Description: Solid state, with dry contacts rated for 1800 VA inductive, to operate connected relay, contactor coils, or microprocessor input; complying with UL 773A, and compatible with ballasts and LED lamps.

1. Listed and labeled as defined in NFPA 70, by a qualified testing agency, and marked for intended location and application.
2. Light-Level Monitoring Range: 1.5 to 10 fc, with an adjustment for turn-on and turn-off levels within that range, and a directional lens in front of the photocell to prevent fixed light sources from causing turn-off.
3. Time Delay: Fifteen-second minimum, to prevent false operation.
4. Surge Protection: Metal-oxide varistor.
5. Mounting: Twist lock complies with NEMA C136.10, with base-and-stem mounting or stem-and-swivel mounting accessories as required to direct sensor to the north sky exposure.
6. Failure Mode: Luminaire stays ON.

2.3 INDOOR OCCUPANCY AND VACANCY SENSORS

A. General Requirements for Sensors:

1. Wall or Ceiling-mounted (as shown on drawings), solid-state indoor occupancy and vacancy sensors.
2. Dual technology.
3. Integrated power pack.
4. Listed and labeled as defined in NFPA 70, by a qualified testing agency, and marked for intended location and application.
5. Operation:
   a. Vacancy Sensor: Unless otherwise indicated, lights are manually turned on and sensor turns lights off when the room is unoccupied; with a time delay for turning lights off, adjustable over a minimum range of 1 to 15 minutes.
6. Sensor Output: Sensor is powered from the power pack.
7. Power: Line voltage.
8. Power Pack: Dry contacts rated for 20-A ballast or LED load at 120- and 277-V ac, for 13-A tungsten at 120-V ac, and for 1 hp at 120-V ac. Sensor has 24-V dc, 150-mA, Class 2 power source, as defined by NFPA 70.
9. Mounting:
   a. Sensor: Suitable for mounting in any position on a standard outlet box.
   b. Relay: Externally mounted through a 1/2-inch knockout in a standard electrical enclosure.
   c. Time-Delay and Sensitivity Adjustments: Recessed and concealed behind hinged door.
10. Indicator: Digital display, to show when motion is detected during testing and normal operation of sensor.
11. Bypass Switch: Override the "on" function in case of sensor failure.

12. Automatic Light-Level Sensor: Adjustable from 2 to 200 fc; turn lights off when selected lighting level is present.

B. PIR Type: W**all** or **Ceiling** mounted; detect occupants in coverage area by their heat and movement.

1. Detector Sensitivity: Detect occurrences of 6-inch-minimum movement of any portion of a human body that presents a target of not less than 36 sq. in..
2. Detection Coverage (Room, Ceiling Mounted): Detect occupancy anywhere in a circular area of 1000 sq. ft. when mounted on a 96-inch-high ceiling.
3. Detection Coverage (Corridor, Ceiling Mounted): Detect occupancy within 90 feet when mounted on a 10-foot-high ceiling.
4. Detection Coverage (Room, Wall Mounted): Detect occupancy anywhere within a 180-degree pattern centered on the sensor over an area of 1000 square feet when mounted 48 inches above finished floor.

C. Ultrasonic Type: Wall or Ceiling mounted; detect occupants in coverage area through pattern changes of reflected ultrasonic energy.

1. Detector Sensitivity: Detect a person of average size and weight moving not less than 12 inches in either a horizontal or a vertical manner at an approximate speed of 12 inches/s.
2. Detection Coverage (Small Room): Detect occupancy anywhere within a circular area of 600 sq. ft. when mounted on a 96-inch-high ceiling.
3. Detection Coverage (Standard Room): Detect occupancy anywhere within a circular area of 1000 sq. ft. when mounted at ceiling height.
4. Detection Coverage (Large Room): Detect occupancy anywhere within a circular area of 2000 sq. ft. when mounted on at ceiling height.
5. Detection Coverage (Corridor): Detect occupancy anywhere within 90 feet when mounted on at ceiling height in a corridor not wider than 14 feet.
6. Detection Coverage (Room, Wall Mounted): Detect occupancy anywhere within a 180-degree pattern centered on the sensor over an area of 2000 square feet when mounted 84 inches above finished floor.

D. Dual-Technology Type: Wall or Ceiling mounted; detect occupants in coverage area using PIR and ultrasonic detection methods. The particular technology or combination of technologies that control on-off functions is selectable in the field by operating controls on unit.

1. Sensitivity Adjustment: Separate for each sensing technology.
2. Detector Sensitivity: Detect occurrences of 6-inch-minimum movement of any portion of a human body that presents a target of not less than 36 sq. in., and detect a person of average size and weight moving not less than 12 inches in either a horizontal or a vertical manner at an approximate speed of 12 inches/s.

2.4 SWITCHBOX-MOUNTED VACANCY SENSORS

A. General Requirements for Sensors: Automatic-wall-switch occupancy sensor with manual on-off switch, suitable for mounting in a single gang switchbox using hardwired connection.

1. Listed and labeled as defined in NFPA 70, by a qualified testing agency, and marked for intended location and application, and shall comply with California Title 24.
2. Vacancy Sensor Operation: Unless otherwise indicated, turn lights off when coverage area is unoccupied, with a time delay for turning lights off, adjustable over a minimum range of 1 to 15 minutes.
3. Operating Ambient Conditions: Dry interior conditions, 32 to 120 deg F.

4. Switch Rating: Not less than 800-VA LED load at 120 V, 1200-VA LED load at 277 V, and 800-W incandescent.

B. Wall-Switch Sensor Tag OS or OCC:

1. Standard Range: 180-degree field of view, field adjustable from 180 to 40 degrees; with a minimum coverage area of 2100 sq. ft.
2. Sensing Technology: Dual technology - PIR and ultrasonic.
3. Capable of controlling load in three-way application.
4. Voltage: Match the circuit voltage.
5. Ambient-Light Override: Concealed, field-adjustable, light-level sensor from 10 to 150 fc. The switch prevents the lights from turning on when the light level is higher than the set point of the sensor.
6. Concealed, field-adjustable, "off" time-delay selector at up to 30 minutes.
7. Adaptive Technology: Self-adjusting circuitry detects and memorizes usage patterns of the space and helps eliminate false "off" switching.
8. Color: Obtain approval from architect prior to ordering.
9. Faceplate: Color matched to switch.

2.5 HIGH-BAY OCCUPANCY SENSORS

A. General Description: Solid-state unit. The unit is designed to operate with the lamp and ballasts indicated.

1. Listed and labeled as defined in NFPA 70, by a qualified testing agency, and marked for intended location and application.
2. Operation: Turn lights on when coverage area is occupied, and to half-power when unoccupied; with a time delay for turning lights to half-power that is adjustable over a minimum range of 1 to 16 minutes.
3. Continuous Lamp Monitoring: When lamps are dimmed continuously for 24 hours, automatically turn lamps on to full power for 15 minutes for every 24 hours of continuous dimming.
4. Power: Line voltage.
5. Operating Ambient Conditions: 32 to 149 deg F.
6. Mounting: Threaded pipe.
7. Time-Delay and Sensitivity Adjustments: Recessed and concealed behind hinged door.
8. Detector Technology: PIR.
9. Power and dimming control from the luminaire ballast that has been modified to include the dimming capacitor.

B. Detector Coverage: User selectable by interchangeable PIR lenses, suitable for mounting heights from 12 to 50 feet.

C. Accessories: Obtain manufacturer's installation and maintenance kit with laser alignment tool for sensor positioning and power port connectors.

2.6 LIGHTING CONTROL FOR EXTERIOR LIGHTS

A. Description: Four Pole pass-thru style relay panel. Panel shall include capacity to control four 20A circuits. Manual and programmable control of each relay via simple keypad and 2 line display. UL 916 in NEMA 1 enclosure. Include outdoor photosensor. Equal performance to Eaton LK4 LiteKeeper series.

1. Current Rating for Switching: Listing or rating consistent with type of load served, including LED, inductive, and high-inrush ballast (ballast with 15 percent or less THD of normal load current).
2. Fault Current Withstand Rating: Equal to or exceeding the available fault current at the point of installation.
3. Enclosure: Comply with NEMA 250.
4. Provide with control as indicated on Drawings, matching the NEMA type specified for the enclosure.

2.7 EMERGENCY SHUNT RELAY

A. Description: NC, electrically held relay, arranged for wiring in parallel with manual or automatic switching contacts; complying with UL 924.

1. Coil Rating: As indicated on drawings.

2.8 CONDUCTORS AND CABLES

A. Power Wiring to Supply Side of Remote-Control Power Sources: Not smaller than No. 12 AWG. Comply with requirements in Section 26 0519 "Low-Voltage Electrical Power Conductors and Cables."

B. Classes 2 and 3 Control Cable: Multiconductor cable with stranded-copper conductors not smaller than No. 18 AWG. Comply with requirements in Section 26 0519 "Low-Voltage Electrical Power Conductors and Cables."

C. Class 1 Control Cable: Multiconductor cable with stranded-copper conductors not smaller than No. 16 AWG. Comply with requirements in Section 26 0519 "Low-Voltage Electrical Power Conductors and Cables."

PART 3 - EXECUTION

3.1 EXAMINATION

A. Examine lighting control devices before installation. Reject lighting control devices that are wet, moisture damaged, or mold damaged.

B. Examine walls and ceilings for suitable conditions where lighting control devices will be installed.

C. Proceed with installation only after unsatisfactory conditions have been corrected.

3.2 SENSOR INSTALLATION

A. Comply with NECA 1.

B. Coordinate layout and installation of ceiling-mounted devices with other construction that penetrates ceilings or is supported by them, including light fixtures, HVAC equipment, smoke detectors, fire-suppression systems, and partition assemblies.

C. Install and aim sensors in locations to achieve not less than 90-percent coverage of areas indicated. Do not exceed coverage limits specified in manufacturer's written instructions.

3.3 WIRING INSTALLATION

A. Comply with NECA 1.

B. Wiring Method: Comply with Section 26 0519 "Low-Voltage Electrical Power Conductors and Cables." Minimum conduit size is 1/2 inch.

C. Wiring within Enclosures: Comply with NECA 1. Separate power-limited and nonpower-limited conductors according to conductor manufacturer's written instructions.

D. Size conductors according to lighting control device manufacturer's written instructions unless otherwise indicated.

E. Splices, Taps, and Terminations: Make connections only on numbered terminal strips in junction, pull, and outlet boxes; terminal cabinets; and equipment enclosures.

3.4 IDENTIFICATION

A. Identify components and power and control wiring according to Section 26 0553 "Identification for Electrical Systems."

1. Identify controlled circuits in lighting contactors.
2. Identify circuits or luminaires controlled by photoelectric and occupancy sensors at each sensor.

B. Label time switches and contactors with a unique designation.

3.5 FIELD QUALITY CONTROL

A. Manufacturer's Field Service: Engage a factory-authorized service representative to test and inspect components, assemblies, and equipment installations, including connections.

B. Perform the following tests and inspections:

1. Operational Test: After installing time switches and sensors, and after electrical circuitry has been energized, start units to confirm proper unit operation.
2. Test and adjust controls and safeties. Replace damaged and malfunctioning controls and equipment.

C. Lighting control devices will be considered defective if they do not pass tests and inspections.

D. Prepare test and inspection reports.

3.6 ADJUSTING

A. Occupancy Adjustments: When requested within 12 months from date of Substantial Completion, provide on-site assistance in adjusting lighting control devices to suit actual

occupied conditions. Provide up to two visits to Project during other-than-normal occupancy hours for this purpose.

1. For occupancy and motion sensors, verify operation at outer limits of detector range. Set time delay to suit Owner's operations.
2. For daylighting controls, adjust set points and deadband controls to suit Owner's operations.
3. Align high-bay occupancy sensors using manufacturer's laser aiming tool.

3.7 DEMONSTRATION

A. Train Owner's maintenance personnel to adjust, operate, and maintain lighting control devices.

END OF SECTION

SECTION 26 0943

NETWORK LIGHTING CONTROLS

PART 1. GENERAL

1.1 SUMMARY

A. Section Includes:

1. Networked Central Lighting Control systems. Systems are composed of:
    a. Network integrated power switching systems.
    b. Network integrated dimming systems.
    c. Standalone power switching and dimming systems.
    d. DALI-compliant network integrated lighting controller.
    e. Automation control processors.
    f. Sensors
    g. User Interfaces:
        1) Keypad
        2) Touch screen
        3) Virtual touch screen
2. System Functions and Sequences

B. Related Requirements:

1. Section 12 24 13 Roller Window Shades
2. Section 25 08 00 Commissioning of Integrated Automation
3. Section 25 10 00 Integrated Automation Network Equipment
4. Section 25 11 13 Integrated Automation Network Servers
5. Section 25 13 13 Integrated Automation Control and Monitoring Network Supervisory Control

6. Section 25 13 19 Integrated Automation Control and Monitoring Network Interoperability
7. Section 25 15 16 Integrated Automation Software for Control and Monitoring Networks
8. Section 26 05 00 Common Work Results For Electrical
9. Section 26 27 26 Wiring Devices
10. Section 26 51 00 Interior Lighting
11. Section 27 15 00 Communications Horizontal Cabling
12. Section 27 41 00 Audio-Video Systems

REFERENCES

C. Definitions
1. Control: Effecting a change in state by one PC program onto a microprocessor or device.
2. Scene: Predetermined light level of a single fixture of group of fixtures.
3. DALI: Digital addressable lighting interface.
4. RS-485: A serial network protocol complying with TIA-485-A.
5. UTP: Unshielded twisted pair.

D. Reference Standards
1. California Energy Commission (CEC):
2. CEC CCR Title 24, Part 6: California Energy Efficiency Standards for Residential and Nonresidential Buildings, California's Appliance Efficiency Program: Listed lighting control devices.
3. National Fire Protection Association (NFPA):
4. NFPA 70 - National Electrical Code.
5. Underwriters Laboratories (UL)
6. UL 508 – Industrial Control Equipment

SYSTEM DESCRIPTION

E. Web Accessible, network connected, lighting control system utilizing preset control software, central signal microprocessor, lighting control panel including integrated branch circuit protection, and [power switching modules and relays] [Dimming Modules] [DALI Control Modules] [Sensors] [User Interfaces].

F. System Components: System includes the following addressable components:
1. Keypad controls.
2. Touch screen controls.
3. Window treatment controls.
4. Remote occupancy sensors.
5. Lighting load shedding.
6. Timed room lighting.
7. Daylight compensating lighting controls.
8. Communication interface to facility-wide room management system.
9. Communication interface to building automation system gateway/interface.

SUBMITTALS

G. Product Data: For each type of product required for complete network lighting control system, demonstrating compliance with requirements.

H. Shop Drawings: Indicated the following:

1. Schematic diagram showing complete network lighting control system and accessories.
2. Circuits and emergency circuits with capacity and phase, control zones, load type and voltage per circuit.

CLOSEOUT SUBMITTALS

I. Operating and maintenance instructions.

QUALITY ASSURANCE

J. Manufacturer Qualification: Manufacturer of network lighting controls with minimum [five] years record of satisfactory manufacturing and support of components comparable to basis of design system.

K. Source Requirements: Provide Network Lighting System through a single source from a single manufacturer.

L. Manufacturer Qualifications: Approved manufacturer of network lighting controls listed in this Section with minimum [five] years record of satisfactory manufacturing and support of components comparable to basis of design system.

1. Approval of Comparable Products: Submit the following in accordance with project substitution requirements, within time allowed for substitution review:
   a. Product data, including certified independent test data indicating compliance with requirements.
   b. Samples of each component.
   c. Sample submittal from similar project.
   d. Project references: Minimum of 5 installations not less than 5 years old, with Owner and Architect contact information.
   e. Sample warranty.
2. Substitutions following award of contract are not allowed except as stipulated in Division 01 General Requirements.
3. Approved manufacturers must comply with separate requirements of Submittals Article.

M. Electrical Components, Devices, and Accessories: UL listed and labeled per NFPA 70.

N. California Appliance Efficiency Listing: Provide products that comply with provisions of CEC CCR Title 24, Part 6.

COORDINATION

O. Coordinate integrated lighting and dimming controls with systems and components specified in the following sections:

1. Division 11 Section "Audio-Visual Equipment".
2. Division 12 Section "Window Treatments".
3. Division 23 Section "Instrumentation and Control for HVAC".
4. Division 25 Section "Integrated Automation Control of Electrical Systems".
5. Division 26 Section "Panelboards".

6. Division 26 Section "Wiring Devices".
7. Division 26 Section "Lighting Devices".
8. Division 26 Section "Interior Lighting".
9. Division 27 Section "Communications Horizontal Cabling".
10. Division 27 Section “Audio-Video Systems”
11. Division 28 Section "Electronic Access Control and Intrusion Detection".

PROJECT CONDITIONS

P. Environmental Conditions Range:
   1. Temperature: 32 – 104 deg F (0 - 40 deg C).
   2. Relative Humidity: 10 – 90 percent, noncondensing.

WARRANTY

Q. Special Warranty: Manufacturer's standard form in which manufacturer agrees to repair or replace components of modular dimming controls system the fail in materials or workmanship within the specified warranty period following substantial completion.
   1. Warranty Period: Touch screen display and overlay components: 90 days.
   2. Warranty Period: Disc drives and other moving parts, pan/tilt heads, and power supplies: 1 year.
   3. Warranty Period: Other components, up to 8 years as per warranty contract.

R. Manufacturer's Extended Support Service: Extended telephone support: Unlimited period.

PART 2. PRODUCTS

WIRELESS DIMMING SOLUTIONS

A. MANUFACTURERS
   1. Basis-of-Design Manufacturer: Subject to compliance with requirements, provide products of Crestron Electronics, Inc., Rockleigh, NJ 07647, Phone (855) 644-7643, www.crestron.com with the following components and characteristics.

B. Wireless technology shall be fully compatible and scalable with all manufacturer lighting control solutions.

C. All batteries shall be field replaceable with non-proprietary standard sizes.

D. WIRELESS DEVICES WITHIN THE SPACE
   1. Lighting control devices within the space shall communicate using a Wi-Fi friendly 2.4 GHz peer-to-peer mesh network topology. Devices within the space shall be commissionable as an autonomous control system without the need for additional equipment. Each device shall auto negotiate its RF channel to avoid noisy commercial environments. Wireless communication shall be secured using 128-bit encryption. Up to 32 devices can make up a space. The range between wireless devices shall be 50’. The wireless technology shall be Crestron Zūm MESH.
   2. Junction Box Zone Controllers
      a. Zūm MESH wireless communication
      b. Junction box mounted using ½” knockout
      c. 120 / 277 VAC input
      d. Product

1) Crestron ZUMMESH-JBOX-16A-SW (switched load, 16 amps)
2) Crestron ZUMMESH-JBOX-5A-LV (0-10v dimmed load, 5 amps)
3) Crestron ZUMMESH-JBOX-16A-LV (0-10v dimmed load, 16 amps)
4) Crestron ZUMMESH-JBOX-20A-PLUG (switched plug load, 20 amps)

3. Wall Box Zone Controllers
   a. Zūm MESH wireless communication
   b. Trimmed using gangable Decorator trim plates
   c. Mounted in 3.5” back box
   d. Color shall be white [black] [almond]
   e. Product
      1) Crestron ZUMMESH-5A-SW-W [B] [A]-S (switched load, 5 amps)
      2) Crestron ZUMMESH-5A-LV-W [B] [A]-S (0-10v dimmed load, 5 amps)
4. Keypads (Battery Powered)
   a. Zūm MESH wireless communication
   b. Box, wall, or glass mountable
   c. Trimmed using gangable Decorator trim plates
   d. Replaceable coin cell battery (5-year life)
   e. Color shall be white [black] [almond]
   f. 1 Button (rocker with ON/OFF/DIM UP/DIM DOWN features)



      1) Product: Crestron ZUMMESH-KP10ABATT-W [B] [A]-S
   g. 4 Button (ON/SCENE 1/SCENE 2/OFF)



      1) Product: Crestron ZUMMESH-KP10BBATT-W [B] [A]-S
   h. 6 Button (ON/SCENE 1/SCENE 2/OFF/DIM UP/DIM DOWN)



1) Product: Crestron ZUMMESH-KP10CBATT-W [B] [A]-S

i. 6 Button (ON/SCENE 1/SENSOR DISABLE/OFF/DIM UP/DIM DOWN)

1) Sensor disable – lights will NOT turn off automatically for 2 hours



2) Product: Crestron ZUMMESH-KP10DBATT-W [B] [A]-S

5. Keypads (AC Powered)

a. Zūm MESH wireless communication

b. Box mountable

c. Trimmed using gangable Decorator trim plates

d. 120 / 277 VAC input

e. Color shall be white [black] [almond]

f. 1 Button (rocker with ON/OFF/DIM UP/DIM DOWN features)



1) Product: Crestron ZUMMESH-KP10A-W [B] [A]-S

g. 4 Button (ON/SCENE 1/SCENE 2/OFF)



1) Product: Crestron ZUMMESH-KP10B-W [B] [A]-S

h. 6 Button (ON/SCENE 1/SCENE 2/OFF/DIM UP/DIM DOWN)

1) Product: Crestron ZUMMESH-KP10C-W [B] [A]-S

i. 6 Button (ON/SCENE 1/SENSOR DISABLE/OFF/DIM UP/DIM DOWN)

1) Sensor disable – lights will NOT turn off automatically for 2 hours

2) Product: Crestron ZUMMESH-KP10D-W [B] [A]-S

6. Open loop daylight sensors (Battery Powered)

a. Zūm MESH wireless communication

b. Utilizes open and closed loop technologies for auto calibration

c. Open loop sensing technology for daily sensing

d. Replaceable (2) lithium-ion AAA batteries (10-year life)

e. Product: Crestron ZUMMESH-PHOTOCELL-BATT

7. Motion Sensors

a. Zūm MESH wireless communication

b. Passive infrared sensing technology

c. Ceiling mounted

d. 500 ft.^{2} coverage (8-12 ft. ceilings)

e. Grace Occupancy – when lights turn off due to vacancy, a 15-second grace period starts during which the room lights can be turned on again by waving a hand to trigger the sensor.

f. Vacancy sensor shall go into occupancy mode when keypad low battery detected.

g. Replaceable lithium-ion 9V battery (10-year life)

h. Products:

1) Crestron ZUMMESH-IR-OCCUPANCY-BATT (auto on, auto off)

2) Crestron ZUMMESH-IR-VACANCY-BATT (manual on, auto off)

E. NETWORKING THE WIRELESS SPACES

1. Wireless spaces shall be networked together to enable time clock, load shedding and global management features. The space shall be networked together using a Wi-Fi friendly 2.4 GHz mesh network topology. The range between the wireless devices shall be no more than 150'. The wireless technology shall be Crestron Zūm NET.

2. Networking the space shall incorporate BMS integration as specified hereto after.

3. Wireless solutions shall be fully compatible will all other lighting control solutions specified herein.
4. Wireless Bridge
    a. Each wireless space shall have one wireless bridge. Linking the space (Crestron Zūm MESH) and the networking connection (Crestron Zūm NET).
    b. Wireless bridge shall enable iOS app to reconfigure the space via Bluetooth technology.
    c. Product: Crestron ZUMMESH-NETBRIDGE
5. Wireless Gateway
    a. Crestron Zūm NET gateway shall have bi-directional MESH communication with up to 50 ZUMMESH-NETBRIDGE devices.
    b. Powered via IEEE 802.3at Type 1
    c. Product: Crestron ZUMNET-GATEWAY
6. Floor Hub
    a. Connects up to 100 Crestron ZUMMESH-NETBRIDGE devices
    b. Processor contains astronomical time clock
    c. Maintenance is performed via standard web browser.
    d. 1 rack unit mounted
    e. Product: Crestron ZUM-FLOOR-HUB

SPACE BUILDER

F. MANUFACTURERS
    1. Basis-of-Design Manufacturer: Subject to compliance with requirements, provide products of Crestron Electronics, Inc., Rockleigh, NJ 07647, Phone (855) 644-7643, www.crestron.com with the following components and characteristics.

G. Contractor shall provide the lighting control systems as called out herein and shown on the Contract Drawings with the following additional features

H. Each space shall be factory packaged with the load controller, keypads, sensors, and additional accessories necessary for a completely working space. There shall be separate containers for rough-in and trim materials. The box shall be labeled with the space type.

I. Each space shall be factory configured to operate when installed by the Contractor. On-site configuration shall only be required for sensor tuning and scene setting.

J. Each space shall be autonomous in its control and shall not rely on centralized processors for standard operations.

K. Products
    1. Crestron SpaceBuilder GLPP
    2. Crestron SpaceBuidler GLPAC
    3. Crestron SpaceBuidler GLFLEX
    4. Crestron SpaceBuidler GLDALI
    5. Crestron SpaceBuidler GLDMX
    6. Crestron SpaceBuidler GLGLIPAC
    7. Crestron SpaceBuidler GLILUX
    8. Crestron SpaceBuidler GLPYNG
    9. Crestron SpaceBuidler GLPHASE

10. Crestron SpaceBuidler GLDIST
11. Crestron SpaceBuidler GLNET

1-3 ZONE LIGHTING CONTROLLER

L. MANUFACTURERS
1. Basis-of-Design Manufacturer: Subject to compliance with requirements, provide products of Crestron Electronics, Inc., Rockleigh, NJ 07647, Phone (855) 644-7643, www.crestron.com with the following components and characteristics.

M. Provide 1, 2, or 3 zone lighting controller for switching or 0-10v zones. Unit shall operate as an autonomous lighting controller for the space. All sensors and zones within the space shall be controlled without the need for additional equipment.

N. [Lighting controller shall be networked as part of the building wide lighting control system using Cresnet serial communication.]

O. Lighting controller shall be a surface-mounted industrial control enclosure mounts directly on two side by side 4" square electrical junction boxes, suitable for concealed locations. Lighting controller shall have flying leads with wing nut type connections.

P. Circuit Input: 100 – 277 VAC, 50/60 Hz. Input, one 16 amp

Q. Zone Outputs
1. 1, 2, or 3 high inrush mechanically held relays for switching loads
   a. 1,000,000 cycle mechanically latching relays
   b. Zero-cross arc-less high inrush
   c. Air gap off protection on each channel
2. 0-10v dimming models shall include 0-10v 4 wiring dimming for each channel

R. Product
1. Crestron GLPP-SWCN (1 zone switching)
2. Crestron GLPP-1SW2CN (2 zones switching
3. Crestron GLPP-1SW3CN (3 zones switching
4. Crestron GLPP-DIMFLVCN-PM (1 zone 0-10v dimming with power monitoring)
5. Crestron GLPP-1DIMFLVCN2-PM (2 zones 0-10v dimming with power monitoring)
6. Crestron GLPP-1DIMFLVCN3-PM (3 zones 0-10v dimming with power monitoring)

S. GLPP SPECIFIC ACCESSORIES
1. Keypads
   a. Connects to lighting controller with class II (2) #18 AWG or greater conductors.
   b. Color shall be white [black] [almond].
   c. Scene Functions
      1) ROCKER (ON/OFF/hold to dim) or 4 Button (ON/SCENE 1/SCENE 2/OFF)
         i) Product: Crestron GLPPA-KP-W [B] [A]-S
   d. Zone Functions
      1) Rocker controlling zone 1 (ON/OFF/hold to dim)
         i) Product: Crestron GLPPA-KP1-W [B] [A]-S
      2) Rocker controlling zone 2 (ON/OFF/hold to dim)
         i) Product: Crestron GLPPA-KP2-W [B] [A]-S

3) Rocker controlling zone 3 (ON/OFF/hold to dim)

i) Product: Crestron GLPPA-KP3-W [B] [A]-S

4) 4 Button controlling zones 1-3 (ZONE 1 toggle/ZONE 2 toggle/ZONE 3 toggle/OFF)

i) Product: Crestron GLPPA-KP4-W [B] [A]-S

2. [User Remote Control

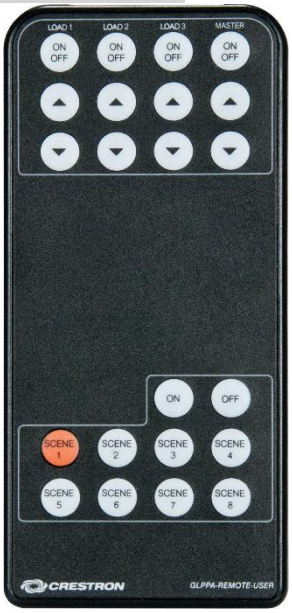

a. Lighting controller shall be adjustable using the handheld battery operated user unit.

b. Pre-programmed at factory, no configuration or programming required.

c. Remote shall provide features:

1) Zone control

2) Scene selection

d. Product: Crestron GLPPA-REMOTE-USER]

3. Configuration Remote Control



a. Lighting controller shall be adjustable using the handheld battery operated configuration remote.

b. Pre-programmed at factory, no configuration or programming required.

c. Remote shall provide features:

1) Zone control

2) Scene setting

3) Motion sensor mode select and timeout

4) Daylight sensor calibration

d. Provide minimum [1] configuration remote per project.

e. Product: Crestron GLPPA-REMOTE-PROG

4. Motion Sensors

a. Motion sensors shall be provided in spaces as shown on the Contract Drawings.

b. Dual technology ultrasonic and passive infrared motion sensing.

c. Lighting controller selectable occupancy (auto-on, auto off) and vacancy (manual-on, auto-off) modes.

d. Vacancy time out shall be adjustable

e. Equipped with 4-wire interface for direct connection to lighting controller enables IR handheld remote signals to be passed through the ceiling to the lighting controller.

f. Coverage: 360 deg., 2000 sq. ft

g. Ceiling or flush mounted

h. Color shall be white

i. Product: Crestron GLS-ODT-C-NS

T. MANUFACTURERS

1. Basis-of-Design Manufacturer: Subject Smpliance with requirements, provide products of Crestron Electronics, Inc., Rockleigh, NJ 07647, Phone (855) 644-7643, www.crestron.com with the following components and characteristics.

U. Provide 4 or 8 zone lighting controller for switching or 0-10v zones. Unit shall operate as an autonomous lighting controller for the space. All sensors and zones within the space shall be controlled without the need for additional equipment.



V. [Lighting controller shall be networked as part of the building wide lighting control system using Ethernet communication.]

W. Lighting controller shall be a surface-mounted NEMA 1 industrial control enclosure, suitable for concealed locations.

X. 4 or 8 circuit inputs

1. 100 – 277 VAC, 50/60 Hz. 16amp each
2. [Barriered 4 normal and 4 emergency relays (-4E models only)]

Y. 4 or 8 zone outputs

1. 100,000 cycle mechanically latching relays
2. Air gap off protection on each channel
3. 0-10v 4-wiring dimming for each channel (60mA max current sink)

Z. 8 digital inputs

AA. 4 motion sensor inputs

BB. 4 daylight sensor inputs

CC. Override port for UL924 life safety applications

DD. [Real time power monitoring on all channels (-PM models only)]

EE. [4 normally open isolated relays(-PM models only)]

FF. [Chicago Plenum rated enclosure (-CP models only)]

GG. Product

1. Crestron GLPAC-DIMFLV4 [-CP] [-PM] (4-CH controller)
2. Crestron GLPAC-DIMFLV8 [-CP] [-PM] (8-CH controller)
3. Crestron GLPAC-DIMFLV8-4E [-CP] [-PM] (4-CH normal & 4-CH emergency controller

CENTRALIZED PANEL SOLUTIONS

HH. MANUFACTURERS

1. Basis-of-Design Manufacturer: Subject to compliance with requirements, provide products of Crestron Electronics, Inc., Rockleigh, NJ 07647, Phone (855) 644-7643, www.crestron.com with the following components and characteristics.

II. PANEL CHARACTERISTICS

1. Panel shall be digitally addressable using serial or Ethernet communication from Control Processor Panel specified hereto after.
2. Lighting dimmers shall be compatible with drivers / ballasts and LEDs / lamps as listed in SS26 50 00 LIGHTING.
3. Dimmers shall be provided in quantities, control types, and rated for the connected load as shown on the Contract Drawings.
4. Line and load phases shall be coordinated per manufacturers recommendations.
5. Dimming modules shall be field replaceable.
6. Dimming panels shall be listed to UL508.
7. Lighting control panels shall be convection cooled without the use of moving parts.
8. Lightning Protection: can withstand 6 kV / 3 kA surge, as per IEC 61000-4-5 and ANSI/IEEE C62.41-1991
9. NEMA Type 1 enclosure, IP20 rated protection, for indoor use only; 16-gauge galvanized steel, surface wall mount; gray front cover with powder coated finish
10. Lighting control panels shall comply with NEMA PB 1 and UL 50 (CAN/CSA C22.2, No. 94), UL 67 (CSA C22.2, No. 29), UL 489 (CAN/CSA C22.2, No. 65), and UL 916 (CSA C22.2, No. 205).

JJ. FEED TYPES

1. Reference Contract Drawing schedules for required feed types and breaker ratings.
2. FEED-THROUGH (FT)
   a. No branch circuit overcurrent protection.
   b. Provide barriers as required to separate normal and emergency circuits in a single panel.
   c. [Panels shall be fabricated as tub and tray. The tub shall be installable at time of rough-in while the factory wired tray is installed separately at time of trim.]
3. MAIN LUG ONLY (MLO)
   a. 120 VAC 3-phase; 120/240 VAC split-phase
      1) 20 amp thermal magnetic
      2) AIC rated to 10,000A [22,000A] [65,000A]
      3) Provide AFCI or GFCI where noted on Contract Drawings.
   b. 277 VAC 3-phase
      1) 20 amp thermal magnetic
      2) AIC rated to 18,000A [35,000A] [65,000A]
4. MAIN CIRCUIT BREAKER (MCB)
   a. 120 VAC 3-pole
      1) 150 amp
      2) 200 amp

3) 220 amp
4) AIC rated to 10,000A [100,000A]

b. 277 VAC 3-pole
1) 60 amp
2) 80 amp
3) 100 amp
4) 125 amp
5) AIC rated to 18,000A [35,000A] [65,000A]

KK. ZONE CONTROL MODULES

1. Standard switching
a. 100,000 cycle mechanically latching relays
b. Air gap off protection on each channel

2. [Hi-Inrush Switching
a. 1,000,000 cycle mechanically latching relays
b. Zero-cross arc-less high inrush
c. Air gap off protection on each channel]

3. [Modular Switching
a. Independently replaceable 20 amp mechanically latching relays
b. Single or double pole per Contract Drawings schedules
c. Air gap off protection on each channel
d. Product: Crestron GLR-HD-1P, GLR-HD-2P]

4. 4-Wire 0-10v Dimming
a. Use for any 4-wire 0-10v dimming load
b. Zero-cross arc-less high inrush
c. Air gap off protection on each channel

5. 2-Wire Phase Dimming
a. Universal Phase Dimming
1) Used for any 2-wire phase dimming loads.
2) Auto-load detection shall select forward- or reverse-phase control based on each channels load.
3) Zero-cross filtering to reduce lamp flickering
4) Air gap off protection on each channel

b. [Reverse Phase Dimming
1) Used for electronic low voltage (ELV) loads unless specifically noted otherwise or recommended by fixture manufacturer.
2) Reverse-phase dimming
3) Zero-cross filtering to reduce lamp flickering
4) Air gap off protection on each channel]

c. [Forward Phase Dimming
1) Used for magnetic low voltage (MLV) or incandescent loads unless specifically noted otherwise or recommended by fixture manufacturer.
2) Forward-phase dimming

3) Zero-cross filtering to reduce lamp flickering

4) Air gap off protection on each channel]

DALI SOLUTIONS

LL. MANUFACTURERS

1. Basis-of-Design Manufacturer: Subject to compliance with requirements, provide products of Crestron Electronics, Inc., Rockleigh, NJ 07647, Phone (855) 644-7643, www.crestron.com with the following components and characteristics.

MM. Where indicated on the Contract Drawings, areas shall have all necessary parts, pieces and software for a fully turnkey DALI solution. System components shall comply with IEC 60929, Annex E, and IEC 62386 for DALI lighting control devices, wiring, computer hardware and software. Solution shall include but not be limited to:

1. Individually addressable electronic drivers/ballasts on the digital DALI bus. Drivers shall be able to receive commands and respond with status.
2. Sensors and user interfaces shall not reside on the DALI bus. These accessories shall be networked to the DALI interface controller as part of the turnkey solution. Reference specifications hereto after for more details on sensor and user interface selections that shall be compatible with the turnkey DALI solution.
3. The DALI bus shall be class 2 (1) twisted pair #18 AWG or larger and be shielded. Install in free air per DIV 26.
4. [The DALI bus shall be class 1 (2) #12 THHN or larger and shall run with branch circuits in raceway per SS 26 05 33.]
5. Each space shall be configured to have a minimum (1) group for all luminaires, and (1) group for each zone of fixtures as shown on the drawings.
6. A DALI interface controller shall be provided
   a. Interface shall control minimum (2) DALI loops (128 DALI addresses)
      1) Contractor shall load the DALI loops to no more than 58 addresses at time of construction.
   b. DIN 43880 form factor occupying not more than 9 DIN modules.
   c. When replacing a single addressed luminaire, DALI re-addressing shall not require re-programming.
   d. Mounts in NEMA 1 metal enclosure.
      1) Product: Crestron DIN-EN
   e. Override port shall open the DALI bus forcing all drivers/ballasts to emergency preset light level (100% ON).
   f. DALI interface shall be commissionable from USB/Ethernet from a PC or from a lighting control touch screen. Software shall allow for configuration of driver properties, groups and scenes.
   g. Product: Crestron DIN-DALI-2

DMX SOLUTIONS

NN. MANUFACTURERS

1. Basis-of-Design Manufacturer: Subject to compliance with requirements, provide products of Crestron Electronics, Inc., Rockleigh, NJ 07647, Phone (855) 644-7643, www.crestron.com with the following components and characteristics.

OO. DMX Architectural Control

1. All Crestron series 2 or 3 processors shall support open DMX Ethernet.
2. DMX architectural control shall include color and intensity selection, preset saving/recall, and simple fade effects. Presets may be recalled from any user interface or triggered by astronomical time clock [or BMS event].

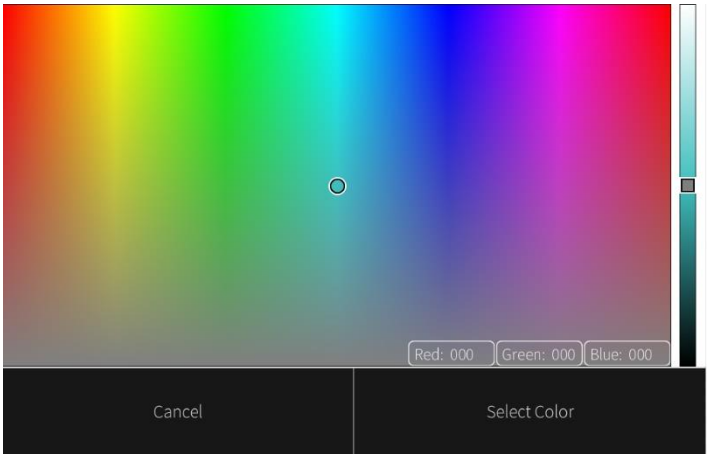

3. Touch screens specified hereto after and called out on the Contract Drawings shall have a color picker user interface. Interface shall accept graphical selections or numerical selections.
4. Adding zones of DMX controlled fixtures shall only require the addition of a DMX Ethernet converter.
5. Contractor shall provide DMX Ethernet converters as required to interface with architectural DMX zones as shown on the Contract Drawings.
6. sACN to DMX-512 Converter
   a. Compatible with ESP and Art-Net DMX over Ethernet protocols.
   b. Supports RDM bi-directional communication.
   c. IEEE 802.3af PoE powered.
   d. Single port DMX to Ethernet node that can be used in either input or output mode depending on software utility set up configuration.
   e. Product: Crestron GLA-DIN-ODE-POE

PP. DMX Show Control

1. Full DMX show control shall be provided for the following spaces:
   a. [THEATER 101]
   b. [Reference Contract Drawing plans for scope areas.]
2. The DMX Control Interface shall be a microprocessor based lighting system designed specifically as a multi-purpose lighting and show playback controller for entertainment and architectural applications. A personal computer running emulation software shall not be acceptable.
3. The DMX Control Interface shall be an integrated device that combines DMX-based lighting playback with architectural control features, scripting capability, and web-based control.

4. The DMX Control Interface shall store all of its programming data in non-volatile flash memory, including built-in flash memory and/or a removable flash memory card and can be transferred to/from a remote personal computer via Ethernet.
5. The DMX Control Interface shall have an internal real-time clock and calendar that operates from an internal lithium battery even in the absence of external power and be able to trigger shows and other events based on time of day, sunrise, sunset, day of week, day of year and/or a combination of these events.
6. The DMX Control Interface shall be capable of synchronizing its operation with and/or remotely controlling other DMX Control Interfaces of the same kind across an Ethernet network.
7. The DMX Control Interface shall support standard theatrical lighting playback models including direct channel control, fixture level control, groups, channel parking, scaling, disabling, offsets, transparency, tracking and overrides, which can be used to create submasters and grandmaster control, partitioning, zones and other control setups.
8. System capacity
    a. The DMX Control Interface shall support:
    b. Up to 2000 cues.
    c. Up to 200 macros.
    d. Up to 100 groups.
    e. Up to 100 timer events.
    f. Up to 500 timecode event triggers.
    g. Up to 256 DMX input triggers.
    h. Up to 512 button station buttons.
    i. Up to 512 contact closures.
    j. Up to 16 TCP/UDP packet triggers.
    k. Reception of 512 DMX input levels.
    l. Processing of 512 DMX output levels.
    m. Additional DMX outputs may be supported by networking multiple DMX Control Interfaces together via Ethernet.
9. Product
    a. Crestron GLA-DMX-1UNIVERSE (one 512 address DMX universe)
    b. Crestron GLA-DMX-2UNIVERSE (two 512 address DMX universes)

USER INTERFACES

QQ. MANUFACTURERS

1. Basis-of-Design Manufacturer: Subject to compliance with requirements, provide products of Crestron Electronics, Inc., Rockleigh, NJ 07647, Phone (855) 644-7643, www.crestron.com with the following components and characteristics.

RR. KEYPADS







1. Provide keypad quantities and locations as specified herein and shown on the Contract Drawings.
2. Field-configurable remote keypad with auto-adjusting backlight illuminating replaceable, engraveable programmable buttons in number indicated, with white LED indicators, configured to fit in standard single-gang box.
3. Trimmed using decorator face plates.
4. Cresnet connected for power and communication
5. Maximum buttons: 8
6. Color shall be white [black] [almond].
7. Product: Crestron C2N-CBD-P-W [B] [A]-S

SS. FACE PLATES

1. Provide decorator faceplates for all keypad devices.

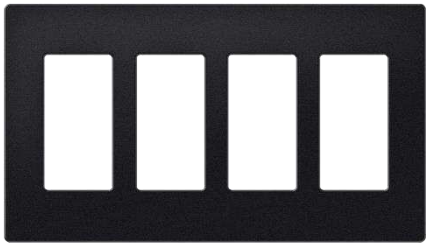

2. Multiple devices adjacent to door jams shall be ganged together.
3. Decorator faceplates shall be white [black] [almond] and shall match in texture and color the keypad devices.
4. Product
   a. FP-G1-W [B] [A]-S (1 gang faceplate)
   b. FP-G2-W [B] [A]-S (2 gang faceplate)
   c. FP-G3-W [B] [A]-S (3 gang faceplate)
   d. FP-G4-W [B] [A]-S (4 gang faceplate)

TT. TOUCH SCREENS



1. TFT active-matrix color LCD touch screen
2. Projected capacitive, 5-point multi-touch technology
3. 24-bit 16.7M colors, and dual-window HD video, HDTV, and high-resolution RGB streaming multimedia, IP intercom, and web browsing capabilities. Dynamic graphics and text capability. Enables custom control screen programming.
4. 5 hard keys pushbuttons
5. Bidirectional 10/100 Mbps Ethernet communication.
6. H.264 and MJPEG streaming video.
7. 5.0 MP camera
8. Built-in microphone and speaker with multi-language voice recognition
9. Rava SIP intercom
10. Connected via IEEE 802.3af Class 3 PoE Powered Device
11. Surface mount over 2-gang or 3-gang electrical box.
12. Color: [Black] [White].
13. Products
    a. Crestron TSW-760-W-S (7” white, 2-gang mounted)
    b. Crestron TSW-1060-W-S (10” white, 3-gang mounted)
    c. Crestron TSW-760-B-S (7” black, 2-gang mounted)
    d. Crestron TSW-1060-B-S (10” black, 3-gang mounted)

UU. XPanel Interface: Virtual Touch Screen

1. Touch screen user interface, network-connected lighting management interface running on Crestron lighting control processor to provide lighting control, daylight harvesting, occupancy sensing, lighting schedules and overall adjustment to system functionality
2. Virtual touch screen is to be accessible via computer or laptop interface furnished by other.
3. Access to XPanel shall be via browser based IP address or .EXE file application.
4. Product: Crestron XPANEL

SENSORS

VV. MANUFACTURERS

1. Basis-of-Design Manufacturer: Subject to compliance with requirements, provide products of Crestron Electronics, Inc., Rockleigh, NJ 07647, Phone (855) 644-7643, www.crestron.com with the following components and characteristics.

2. Contractor shall provide quantities and locations of sensors per the Contract Drawings and as required for turnkey commercial lighting control operation.

WW. MOTION SENSORS

1. Dual-Technology Ceiling Mounted (networked)



a. Detects movement within space while reducing false triggering or shutoffs while space is occupied. Combination of ultrasonic motion detection and passive infrared detection with internal microprocessor. Sensitivity is independently adjustable for installed conditions. Delayed time off adjustment. Walk-through mode.

b. Equipped with 4-wire interface for direct connection to control bus.

c. Includes connection port for remotely mounted photocell.

d. Coverage: 360 deg., 2000 ft.^{2}

e. Set-up and commissioning parameters shall be configurable via a handheld wireless remote.

f. Mounts to 3” octagon box

g. Product: Crestron GLS-ODT-C-CN

2. Dual Technology Wall Mounted



a. Detects movement within space while reducing false triggering or shutoffs while space is occupied. Combination of ultrasonic motion detection and passive infrared detection with internal microprocessor. Sensitivity is independently adjustable for installed conditions. Delayed time off adjustment. Walk-through mode.

b. Equipped with 3-wire interface for direct connection to control system utilizing control processor

c. Coverage: 110 deg horizontal., 1200 ft.^{2}

d. Mounts to 4” octagon box or surface mounted.

e. Product: Crestron GLS-ODT-W-1200

XX. DAYLIGHT SENSORS

1. Indoor Daylight Sensor (open loop)



   a. Continually monitors daylight entering window or skylight to enable daylight harvesting applications to provide control of room lighting based on presence of daylight. Equipped with 3-wire interface for direct connection to control system utilizing control processor; 24 VDC power from network control bus.
   b. Light sensitivity: 3 to 6,000 foot-candles
   c. Mounting: [Ceiling flush mounted] [Ceiling surface mounted] [Wall flush mounted] [Wall surface mounted] [As indicated].
   d. Product: Crestron GLS-LOL

2. Indoor Daylight Sensor (closed loop)

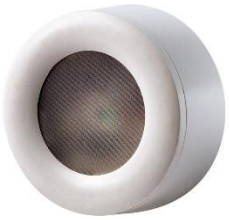

   a. Continually monitors daylight at work station location to enable daylight harvesting or lumen maintenance applications to provide control of room lighting based on lighting level at workstation. Equipped with 3-wire interface for direct connection to control system utilizing control processor; 24 VDC power from network control bus.
   b. Light sensitivity: 0 to 70 foot-candles
   c. Mounting: [Ceiling flush mounted] [Ceiling surface mounted] [Wall flush mounted] [Wall surface mounted] [As indicated].
   d. Product: Crestron GLS-LCL

3. Exterior Daylight Sensor



   a. Sensor shall continually monitor the total ambient light level and can adjust the lighting as necessary to reach the desired light level. The sensitivity is adjustable so that a 10V signal matches full daylight and 0V matches total darkness. A built in visor provides more consistent readings by blocking direct sunlight, and also protects the lens from the elements.
   b. Sensor shall be installed facing north.
   c. Light Sensitivity: 5 to 750 foot-candles
   d. Power: 24 VDC

e. Mounting: surface mount

f. Product: Crestron GLS-LEXT

YY. PARTITION SENSORS



1. Single sided diffuse reflective sensing technology.
2. Digital device with control bus connectivity.
3. Surface mounted to 1-gang back box.
4. Trim using decorator face plate to match mounting surface
5. Product: Crestron GLS-PART-CN

ZZ. SENSOR INTERFACE MODULE



1. Sensor Interface Device: Integrates occupancy sensors and related sensors with control network. In separate enclosure. 4-wire bus providing 24 VDC power to network devices, with two independent sensing inputs.
2. Product: Crestron GLS-SIM

CONTROL PROCESSOR PANEL

AAA. Manufacturers

1. Basis-of-Design Manufacturer: Subject to compliance with requirements, provide products of Crestron Electronics, Inc., Rockleigh, NJ 07647, Phone (855) 644-7643, www.crestron.com with the following components and characteristics.

BBB. Control Processor Panels shall be provided in quantities and locations per the Contract Drawings, or as required for a fully networked lighting control system.

CCC. Control Processor Panels shall be factory assembled in a UL508 panelshop.

DDD. Shall include but not be limited to the following equipment to support all lighting control devices.

1. Cabinets



DIN-EN-2X18 shown

a. Cabinet shall be made of 16-gauge galvanized steel
b. NEMA 1 rated
c. All DIN rails and mounting accessories shall be furnished an properly installed.
d. Product: Crestron DIN-EN

2. Processors



a. Crestron 3-series control system
b. Modular architecture supports multiple simultaneous running programs.
c. Ethernet 10/100Base-T and Cresnet connected
d. Astronomical time clock with events stored in non-volatile RAM
e. Native BACnet/IP with support for up to 500 BACnet objects
f. Built-In Web Server: IIS v.6.0
g. SNMP remote management.
h. Active Directory support.
i. IPv6 ready.
j. DHCP and DNS Support
k. Native Email Client
l. Remote Diagnostics
m. Remote Program Loading and Administration
n. SSL security plug in
o. Support user assigned or dynamic IP address.
p. Products
    1) Crestron DIN-AP3
    2) Crestron RMC3

3. Power Supplies



a. Provide regulated 24 VDC power supplies as required to support lighting control equipment.
b. 120 VAC input
c. Product: Crestron DIN-PWS50

4. Hubs

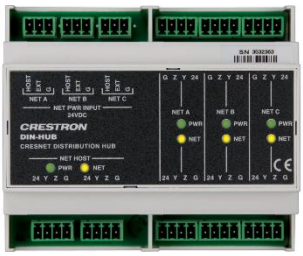

a. Provide Cresnet distribution hubs as required to support all Cresnet devices.
b. Product: Crestron DIN-HUB

UL924 EMERGENCY OVERRIDE

EEE. Automatic Load Control Relays (ALCR)

1. 0-10v Loads
   a. UL924 listed 4-wire automatic load control relay shall bring life safety lights on to 100% on loss of power.
   b. 120/277 VAC
   c. Product: Crestron GLA-EPC-FLV
2. Switched Loads
   a. UL924 listed 2-wire automatic load control relay shall bring life safety lights on to 100% on loss of power.
   b. Products
      1) Crestron GLA-EPC-P-120 (120 VAC)
      2) Crestron GLA-EPC-P-277 (277 VAC)

FFF. Emergency Shunt Relays (ESR)

1. 2 or 3 Wire Phase Controlled Loads
   a. UL924 listed 2/3-wire emergency shunt relay shall bring life safety lights on to 100% on loss of power.
   b. Products
      1) Crestron GLA-ESR-120-3/4 (120 VAC)
      2) Crestron GLA-ESR-277-3/4 (277 VAC)

GGG. Phase Loss Sensor



1. Lighting control panels shown on the Contract Drawings as emergency life safety shall have override UL924 listed override ports.
2. Provide 3-phase loss sensor fed with normal power. Upon loss of any phase the phase loss sensor shall trip the emergency lighting control panel override port(s).
3. Product: Crestron GLS-PLS-120/277

PROGRAMMING AND CONFIGURATION SOFTWARE

HHH. Lighting system configuration software shall allow custom programming of embedded operating systems for control of lighting system.

III. Lighting system configuration software shall Provide a graphical symbol based programming and development environment.

JJJ. The Lighting System Configuration software shall generate Custom Software Control Interface Modules for communication with compatible remote integrated systems.

KKK. The Custom Software Control Interface shall include the following control data:

1. Complete lighting system control functions.
2. System specific control sets for sub systems and supervisory systems.
3. The Custom Software Control Interface shall be capable of communicating the following data types:
4. Bidirectional digital and analog data communication.
5. Bidirectional serial data communication.

CONDUCTORS AND CABLING

LLL. Power Supply Side of Remote-Control Power Sources: Comply with requirements of Division 26 Section "Low-Voltage Electrical Power Conductors."

MMM. UTP Cable: 100-ohm, UTP. Listed and labeled by an NRTL acceptable to authorities having jurisdiction as complying with UL 444 and NFPA 70 for the following types:

NNN. Communications Control Cable, Non-Plenum Rated: 22 AWG data pair stranded bare copper, and 18 AWG power pair stranded bare copper, Type CM.

1. Product: Crestron CRESNET-NP.

OOO. Communications Control Cable, Plenum Rated: 22 AWG data pair, stranded bare copper and 18 AWG power pair, stranded bare copper, Type CMP, complying with NFPA 262.

1. Product: Crestron CRESNET-P.

PPP. Communications High-Power Control Cable, Non-Plenum Rated: 22 AWG stranded bare copper data pair, and 12 AWG stranded bare copper power pair, Type CM.

1. Product: Crestron CRESNET-HP-NP.

PART 3. EXECUTION

FIXTURE TESTING

A. Contractor shall provide lighting control factory test reports for each fixture specified on this project.

B. Fixtures already tested and listed in the factory database do not require re-testing.

C. Test report shall include:

1. Confirmation of compatibility with control device
2. Dimming Range
3. Performance notations

D. Crestron factory fixture compatibility testing information may be found here: http://www.crestron.com/resources/lighting-fixture-compatibility

TUNABLE WHITE CONTROL

E. Tunable white fixtures as specified in SS 26 50 00 and shown on the contract drawings shall have DALI [DMX] drivers and controls as specified hereto before.

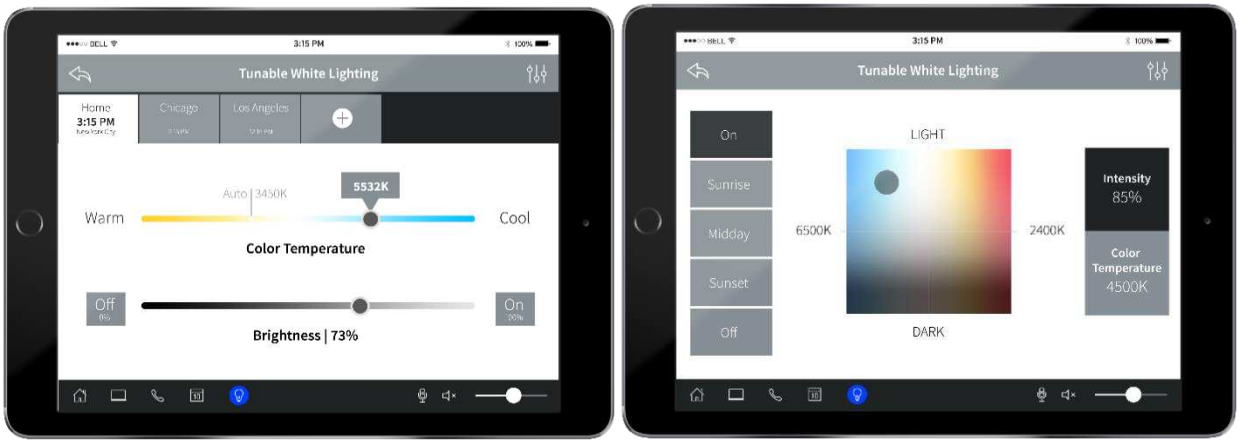

F. Touch screens specified hereto after and called out on the Contract Drawings shall have intensity and color temperature controls as well as a color picker user interface.

G. Meetings shall occur between the Owner, Contractor, and Manufacturer to coordinate the sequencing and features of the tunable white fixtures. Tunable white coordination meetings shall include but not be limited to:

1. [(2) 2 hour]
2. [(2) 8 hour on-site visits]

PLUG LOAD CONTROL

H. Plug load controls as shown on the Contract Drawing shall be part of the lighting control system.

I. Plug loads shall operate in a Occupancy MODE. Auto-ON and Auto-OFF.

ENGRAVING

J. Keypad buttons shall be factory engraved using laser technology.

K. Initial shipment of keypads shall be factory engraved per the sequence of operations specified herein and shown on the Contract Drawings.

L. Custom keypad engravings shall be provided as part of the close out procedures.

BMS INTEGRATION

M. The lighting control system shall be integrated with the BMS system as specified in Division 25.

N. Communication shall occur using BACnet/IP.

O. Contractor shall provide licenses for each the following objects shall be shared with the BMS system:

1. Occupancy Status
2. Zone On/Off/Dim
3. Photocell reading

P. The lighting control system shall also accept time clocked events from the BMS system.

Q. Provide necessary coordination labor for integration of all BACnet objects listed hereto before.

AV INTEGRATION

R. The lighting control system shall be integrated with the AV solutions as specified in Division 26.

S. The lighting and AV systems shall interface via Ethernet communication.

T. Contractor shall provide Ethernet drops as required for the lighting control system to talk to the AV solutions.

U. The following objects shall be shared with the AV system:

1. Occupancy Status
2. Zone On/Off/Dim
3. Photocell reading
4. Scene preset recalls

V. Provide necessary coordination labor for integration of all AV objects listed hereto before.

SYSTEM FUNCTIONS AND SEQUENCES

W. System Control Functions: The system shall be capable of the following lighting control functions:

X. Scene Creation: store levels of selected fixture circuits in preset groups.

Y. Scene Recall: recall previously stored scenes.

Z. Off: all zones off.

AA. Dim up/down: raise/lower level of all zones.

BB. Password Entry: enter password to enable touch screen control access.

CC. Room/Zone Selection: select room, zone or area to be controlled.

DD. Shade Control: raise or lower room shades.

EE. Event Scheduler: select times for scenes to be automatically recalled.

USER INTERFACE CONTROL FUNCTIONS

FF. The Keypad interface shall be capable of the following system control functions:

1. Scene Recall
2. Off
3. Dim up/down

GG. Touch Screen and Virtual Touch Screen: Touch Screen and Virtual Touch Screen interfaces shall be capable of the following system control functions:

1. Password Entry
2. Multiple levels
3. Room/Zone Selection
4. Scene Recall
5. Dim up/down
6. Shade Control
7. Scene Recall
8. Event Scheduler
9. Customer logo and color scheme

HH. Optional Control Sequences for Advanced Control:

1. Occupancy adjustments
2. Timeout
3. Control logic (occupancy or vacancy sensor)
4. Lighting Scenes
5. Custom scene adjustment through sliders and press+hold operation
6. Individual zone control override
7. Timeclock Adjustment
8. Modify timeclock activation schedule
9. Select/unselect pre-programmed timeclock events
10. Display all timeclock events
11. Daylight Harvesting Adjustments
12. Minimum dim level
13. Response time
14. Zone control
15. Scene Recall
16. Fade time
17. Color scene recall and saving

TIME CLOCK EVENTS

II. The lighting control system shall have astronomical time clocked events. 6 time clock events shall be provided.

JJ. End User shall have the option to create additional time clock events via touch screen or XPanel interfaces

INSTALLATION

KK. Prior to installation, examine work area to verify measurements, and that commencing installation complies with manufacturer's requirements.

LL. Comply with requirements of Division 26 Sections "Common Work Results for Electrical."

MM. Do not install network power controls until space is enclosed, HVAC systems are running, and overhead and wet work in space are complete.

NN. Install network power switching controls in accordance with manufacturer's instructions.

OO. Grounding: Provide electrical grounding in accordance with NFPA 70.

MANUFACTURER SUPPORTED SERVICES

PP. PRE-WIRE

1. Manufacturer shall provide on-site visit during the rough-in stage of the installation. At this time wiring topologies and terminations shall be reviewed with the Contractor.

QQ. STARTUP

1. Provide manufacturer's system startup and adjustment.
2. Switch each load on and off with manual line test feature of the power switching module before installing processors.
3. Perform operational testing to verify compliance with Specifications. Adjust as required.

RR. TUNING

1. Within 12 months of the date of Substantial Completion provide onsite service to adjust the system to account for actual occupied conditions.

SS. TRAINING

1. Factory authorized service representative to instruct owner's staff to adjust, operate and maintain network power switching systems; and provide instruction using the system software.
2. Demonstration: Schedule demonstration with Owner.
3. Training: Train Owner's personnel to operate, maintain, and program network power switching systems. Allow for a minimum of trips to the jobsite to provide additional training as needed.
4. Furnish set of approved submittals, and record drawings of actual installation for Owner's personnel in attendance at training session.

END OF SECTION

SECTION 26 2200

LOW-VOLTAGE TRANSFORMERS

PART 1 - GENERAL

1.1 RELATED DOCUMENTS

A. Drawings and general provisions of the Contract, including General and Supplementary Conditions and Division 01 Specification Sections, apply to this Section.

1.2 SUMMARY

A. Section Includes: Distribution and buck-boost, dry-type transformers rated 600 V and less, with capacities up to 1500 kVA.

1.3 ACTION SUBMITTALS

A. Product Data: For each type of product.

1. Include construction details, material descriptions, dimensions of individual components and profiles, and finishes for each type and size of transformer.
2. Include rated nameplate data, capacities, weights, dimensions, minimum clearances, installed devices and features, and performance for each type and size of transformer.

B. Shop Drawings:

1. Detail equipment assemblies and indicate dimensions, weights, loads, required clearances, method of field assembly, components, and location and size of each field connection.
2. Vibration Isolation Base Details: Detail fabrication including anchorages and attachments to structure and to supported equipment.
3. Include diagrams for power, signal, and control wiring.

1.4 INFORMATIONAL SUBMITTALS

A. Seismic Qualification Certificates: For transformers, accessories, and components, from manufacturer.

1. Basis for Certification: Indicate whether withstand certification is based on actual test of assembled components or on calculation.
2. Dimensioned Outline Drawings of Equipment Unit: Identify center of gravity and locate and describe mounting and anchorage provisions.
3. Detailed description of equipment anchorage devices on which the certification is based and their installation requirements.

B. Qualification Data: For testing agency.

C. Source quality-control reports.

D. Field quality-control reports.

1.5 CLOSEOUT SUBMITTALS

A. Operation and Maintenance Data: For transformers to include in emergency, operation, and maintenance manuals.

1.6 QUALITY ASSURANCE

A. Testing Agency Qualifications: Accredited by NETA.

1. Testing Agency's Field Supervisor: Certified by NETA to supervise on-site testing.

1.7 DELIVERY, STORAGE, AND HANDLING

A. Temporary Heating: Apply temporary heat according to manufacturer's written instructions within the enclosure of each ventilated-type unit, throughout periods during which equipment is not energized and when transformer is not in a space that is continuously under normal control of temperature and humidity.

PART 2 - PRODUCTS

2.1 MANUFACTURERS

A. Source Limitations: Obtain each transformer type from single source from single manufacturer.

2.2 GENERAL TRANSFORMER REQUIREMENTS

A. Description: Factory-assembled and -tested, air-cooled units for 60-Hz service.

B. Electrical Components, Devices, and Accessories: Listed and labeled as defined in NFPA 70, by a qualified testing agency, and marked for intended location and application.

C. Transformers Rated 15 kVA and Larger: Comply with NEMA TP 1 energy-efficiency levels as verified by testing according to NEMA TP 2.

D. Cores: Electrical grade, non-aging silicon steel with high permeability and low hysteresis losses.

E. Coils: Continuous windings without splices except for taps.

1. Internal Coil Connections: Brazed or pressure type.
2. Coil Material: Copper.

F. Encapsulation: Transformers smaller than 30 kVA shall have core and coils completely resin encapsulated.

G. Shipping Restraints: Paint or otherwise color code bolts, wedges, blocks, and other restraints that are to be removed after installation and before energizing. Use fluorescent colors that are easily identifiable inside the transformer enclosure.

2.3 DISTRIBUTION TRANSFORMERS

A. Comply with NFPA 70, and list and label as complying with UL 1561.

B. Provide transformers that are constructed to withstand seismic forces specified in Section 26 0548.16 "Seismic Controls for Electrical Systems."

C. Cores: One leg per phase.

D. Enclosure: Ventilated.

1. NEMA 250, Type 3R: Core and coil shall be encapsulated within resin compound utilizing a vacuum pressure impregnation process to seal out moisture and air.
2. KVA Ratings: Based on convection cooling only and not relying on auxiliary fans.

E. Transformer Enclosure Finish: Comply with NEMA 250.

1. Finish Color: Gray.

F. Taps for Transformers 3 kVA and Smaller: One 5 percent tap above normal full capacity.

G. Taps for Transformers 7.5 to 24 kVA: One 5 percent tap above and one 5 percent tap below normal full capacity.

H. Taps for Transformers 25 kVA and Larger: Two 2.5 percent taps above and four 2.5 percent taps below normal full capacity.

I. Insulation Class, Smaller than 30 kVA: 185 deg C, UL-component-recognized insulation system with a maximum of 115-deg C rise above 40-deg C ambient temperature.

J. Insulation Class, 30 kVA and Larger: 220 deg C, UL-component-recognized insulation system with a maximum of 150-deg C rise above 40-deg C ambient temperature.

K. K-Factor Rating: Transformers indicated to be K-factor rated shall comply with UL 1561 requirements for nonsinusoidal load current-handling capability to the degree defined by designated K-factor. Transformers serving gaming loads, heavy computer loads, or other heavy electronics loads, shall have a k-factor rating of 6 minimum.

1. Unit shall not overheat when carrying full-load current with harmonic distortion corresponding to designated K-factor.
2. Indicate value of K-factor on transformer nameplate.
3. Unit shall meet requirements of NEMA TP 1 when tested according to NEMA TP 2 with a K-factor equal to one.

L. Electrostatic Shielding: Each winding shall have an independent, single, full-width copper electrostatic shield arranged to minimize interwinding capacitance.

1. Arrange coil leads and terminal strips to minimize capacitive coupling between input and output terminals.
2. Include special terminal for grounding the shield.

M. Neutral: Rated 200 percent of full load current for K-factor rated transformers.

N. Wall Brackets: Wall brackets fabricated from design drawings signed and sealed by a licensed structural engineer.

O. Fungus Proofing: Permanent fungicidal treatment for coil and core.

2.4 BUCK-BOOST TRANSFORMERS

A. Description: Self-cooled, two-winding dry type, rated for continuous duty and with wiring terminals suitable for connection as autotransformer. Transformers shall be listed and labeled as complying with UL 506 or UL 1561.

1. Standard impedance at 60Hz: 2 percent to 5 percent (up to 10 kVA), 4 percent to 6.5 percent (above 10 kVA).
2. Nameplate Rating: Linear load, 60Hz.
3. Insulation Class: 220 deg C system.
4. Temperature Rise: 150 deg C.
5. Core Construction: Electrical grade, non-aging silicon steel with high permeability and low hysteresis losses.
6. Coil Conductors: Continuous copper windings, with terminations brazed, welded, or bolted.
7. Coil Impregnation: Vacuum impregnated with polyester resin.
8. Sound Level: Not exceeding values listed above for distribution transformers.
9. Enclosure: Ventilated, NEMA 250, Type 3R.
10. Terminations: Transformer coils shall terminate in mounting pads. Mounting lugs shall be provided on all units up to and including 270 A ratings.
11. Antivibration pads or isolators shall be used between the transformer core and coil and the enclosure.
12. Ground core and coil assembly to enclosure with a flexible copper grounding strap or equivalent.
13. Mounting:

    a. Ventilated Units up to 750 lb: Suitable for wall, floor, or ceiling mounting (drip plate required).
    b. Ventilated Units over 750 lb: Suitable for floor mounting only.
    c. Encapsulated Units up to 285 lb: Suitable for wall or floor mounting.
    d. Encapsulated Units over 285 lb: Suitable for floor mounting only.

B. Enclosure: Ventilated, NEMA 250, Type 3R.

1. Finish Color: Gray.

2.5 IDENTIFICATION DEVICES

A. Nameplates: Engraved, laminated-plastic or metal nameplate for each transformer, mounted with corrosion-resistant screws. Nameplates and label products are specified in Section 26 0553 "Identification for Electrical Systems."

2.6 SOURCE QUALITY CONTROL

A. Test and inspect transformers according to IEEE C57.12.01 and IEEE C57.12.91.

1. Resistance measurements of all windings at the rated voltage connections and at all tap connections.
2. Ratio tests at the rated voltage connections and at all tap connections.
3. Phase relation and polarity tests at the rated voltage connections.

4. No load losses, and excitation current and rated voltage at the rated voltage connections.
5. Impedance and load losses at rated current and rated frequency at the rated voltage connections.
6. Applied and induced tensile tests.
7. Regulation and efficiency at rated load and voltage.
8. Insulation Resistance Tests:

    a. High-voltage to ground.
    b. Low-voltage to ground.
    c. High-voltage to low-voltage.

9. Temperature tests.

PART 3 - EXECUTION

3.1 EXAMINATION

A. Examine conditions for compliance with enclosure- and ambient-temperature requirements for each transformer.

B. Verify that field measurements are as needed to maintain working clearances required by NFPA 70 and manufacturer's written instructions.

C. Examine walls, floors, roofs, and concrete bases for suitable mounting conditions where transformers will be installed.

D. Verify that ground connections are in place and requirements in Section 26 0526 "Grounding and Bonding for Electrical Systems" have been met. Maximum ground resistance shall be 5 ohms at location of transformer.

E. Environment: Enclosures shall be rated for the environment in which they are located. Covers for NEMA 250, Type 4X enclosures shall not cause accessibility problems.

F. Proceed with installation only after unsatisfactory conditions have been corrected.

3.2 INSTALLATION

A. Install wall-mounted transformers level and plumb with wall brackets fabricated from design drawings signed and sealed by a licensed structural engineer.

1. Coordinate installation of wall-mounted and structure-hanging supports with actual transformer provided.
2. Brace wall-mounted transformers as specified in Section 26 0548.16 "Seismic Controls for Electrical Systems."

B. Install transformers level and plumb on a concrete base with vibration-dampening supports. Locate transformers away from corners and not parallel to adjacent wall surface.

C. Construct concrete bases according to Section 03 3000 "Cast-in-Place Concrete" or Section 03 3053 "Miscellaneous Cast-in-Place Concrete" and anchor floor-mounted transformers according to manufacturer's written instructions and requirements in Section 26 0529 "Hangers and Supports for Electrical Systems."

1. Coordinate size and location of concrete bases with actual transformer provided. Cast anchor-bolt inserts into bases. Concrete, reinforcement, and formwork requirements are specified with concrete.

D. Secure transformer to concrete base according to manufacturer's written instructions.

E. Secure covers to enclosure and tighten all bolts to manufacturer-recommended torques to reduce noise generation.

F. Remove shipping bolts, blocking, and wedges.

3.3 CONNECTIONS

A. Ground equipment according to Section 26 0526 "Grounding and Bonding for Electrical Systems."

B. Connect wiring according to Section 26 0519 "Low-Voltage Electrical Power Conductors and Cables."

C. Tighten electrical connectors and terminals according to manufacturer's published torque-tightening values. If manufacturer's torque values are not indicated, use those specified in UL 486A-486B.

D. Provide flexible connections at all conduit and conductor terminations and supports to eliminate sound and vibration transmission to the building structure.

3.4 FIELD QUALITY CONTROL

A. Testing Agency: Engage a qualified testing agency to perform tests and inspections.

B. Perform tests and inspections.

C. Tests and Inspections:

1. Perform each visual and mechanical inspection and electrical test stated in NETA ATS for dry-type, air-cooled, low-voltage transformers. Certify compliance with test parameters.

D. Remove and replace units that do not pass tests or inspections and retest as specified above.

E. Infrared Scanning: Two months after Substantial Completion, perform an infrared scan of transformer connections.

1. Use an infrared-scanning device designed to measure temperature or detect significant deviations from normal values. Provide documentation of device calibration.
2. Perform two follow-up infrared scans of transformers, one at four months and the other at 11 months after Substantial Completion.
3. Prepare a certified report identifying transformer checked and describing results of scanning. Include notation of deficiencies detected, remedial action taken, and scanning observations after remedial action.

F. Test Labeling: On completion of satisfactory testing of each unit, attach a dated and signed "Satisfactory Test" label to tested component.

3.5 ADJUSTING

A. Record transformer secondary voltage at each unit for at least 48 hours of typical occupancy period. Adjust transformer taps to provide optimum voltage conditions at secondary terminals. Optimum is defined as not exceeding nameplate voltage plus 5 percent and not being lower than nameplate voltage minus 3 percent at maximum load conditions. Submit recording and tap settings as test results.

B. Connect buck-boost transformers to provide nameplate voltage of equipment being served, plus or minus 5 percent, at secondary terminals.

C. Output Settings Report: Prepare a written report recording output voltages and tap settings.

3.6 CLEANING

A. Vacuum dirt and debris; do not use compressed air to assist in cleaning.

END OF SECTION

SECTION 26 2413

SWITCHBOARDS

PART 1 - GENERAL

1.1 RELATED DOCUMENTS

A. Drawings and general provisions of the Contract, including General and Supplementary Conditions and Division 01 Specification Sections, apply to this Section.

1.2 SUMMARY

A. Section Includes:

1. Service and distribution switchboards rated 600 V and less.
2. Surge protection devices.
3. Disconnecting and overcurrent protective devices.
4. Instrumentation.
5. Control power.
6. Accessory components and features.
7. Identification.
8. Mimic bus.

1.3 RELATED SECTIONS

A. Section 26 0574 "Overcurrent Protective Device Arc-Flash Study" for arc-flash study and arc-flash label requirements.

1.4 ACTION SUBMITTALS

A. Product Data: For each switchboard, overcurrent protective device, surge protection device, ground-fault protector, accessory, and component.

1. Include dimensions and manufacturers' technical data on features, performance, electrical characteristics, ratings, accessories, and finishes.

B. Shop Drawings: For each switchboard and related equipment.

1. Include dimensioned plans, elevations, sections, and details, including required clearances and service space around equipment. Show tabulations of installed devices, equipment features, and ratings.
2. Detail enclosure types for types other than NEMA 250, Type 1.
3. Detail bus configuration, current, and voltage ratings.
4. Detail short-circuit current rating of switchboards and overcurrent protective devices.
5. Detail utility company's metering provisions with indication of approval by utility company.
6. Detail features, characteristics, ratings, and factory settings of individual overcurrent protective devices and auxiliary components.

7. Include time-current coordination curves for each type and rating of overcurrent protective device included in switchboards. Submit on translucent log-log graft paper; include selectable ranges for each type of overcurrent protective device.
8. Include diagram and details of proposed mimic bus.
9. Include schematic and wiring diagrams for power, signal, and control wiring.

C. Samples: Representative portion of mimic bus with specified material and finish, for color selection.

D. Delegated Design Submittal:

1. For arc-flash hazard study.
2. For arc-flash labels.

1.5 INFORMATIONAL SUBMITTALS

A. Qualification Data: For Installer.

B. Seismic Qualification Data: Certificates, for switchboards, overcurrent protective devices, accessories, and components, from manufacturer.

1. Basis for Certification: Indicate whether withstand certification is based on actual test of assembled components or on calculation.
2. Dimensioned Outline Drawings of Equipment Unit: Identify center of gravity and locate and describe mounting and anchorage provisions.
3. Detailed description of equipment anchorage devices on which the certification is based and their installation requirements.

C. Field Quality-Control Reports:

1. Test procedures used.
2. Test results that comply with requirements.
3. Results of failed tests and corrective action taken to achieve test results that comply with requirements.

1.6 CLOSEOUT SUBMITTALS

A. Operation and Maintenance Data: For switchboards and components to include in emergency, operation, and maintenance manuals.

1. In addition to items specified in Section 01 7823 "Operation and Maintenance Data," include the following:

a. Routine maintenance requirements for switchboards and all installed components.
b. Manufacturer's written instructions for testing and adjusting overcurrent protective devices.
c. Time-current coordination curves for each type and rating of overcurrent protective device included in switchboards. Submit on translucent log-log graft paper; include selectable ranges for each type of overcurrent protective device.

1.7 MAINTENANCE MATERIAL SUBMITTALS

A. Furnish extra materials that match products installed and that are packaged with protective covering for storage and identified with labels describing contents.

1. Potential Transformer Fuses: Equal to 10 percent of quantity installed for each size and type but no fewer than two of each size and type.
2. Control-Power Fuses: Equal to 10 percent of quantity installed for each size and type, but no fewer than two of each size and type.
3. Fuses and Fusible Devices for Fused Circuit Breakers: Equal to 10 percent of quantity installed for each size and type but no fewer than three of each size and type.
4. Fuses for Fused Switches: Equal to 10 percent of quantity installed for each size and type but no fewer than three of each size and type.
5. Fuses for Fused Power-Circuit Devices: Equal to 10 percent of quantity installed for each size and type but no fewer than three of each size and type.
6. Indicating Lights: Equal to 10 percent of quantity installed for each size and type but no less than one of each size and type.

1.8 QUALITY ASSURANCE

A. Installer Qualifications: An employer of workers qualified as defined in NEMA PB 2.1 and trained in electrical safety as required by NFPA 70E.

B. Testing Agency Qualifications: Member company of NETA or an NRTL.

1. Testing Agency's Field Supervisor: Certified by NETA to supervise on-site testing.

1.9 DELIVERY, STORAGE, AND HANDLING

A. Deliver switchboards in sections or lengths that can be moved past obstructions in delivery path.

B. Remove loose packing and flammable materials from inside switchboards and install temporary electric heating (250 W per section) to prevent condensation.

C. Handle and prepare switchboards for installation according to NECA 400.

1.10 FIELD CONDITIONS

A. Installation Pathway: Remove and replace access fencing, doors, lift-out panels, and structures to provide pathway for moving switchboards into place.

B. Environmental Limitations:

1. Do not deliver or install switchboards until spaces are enclosed and weathertight, wet work in spaces is complete and dry, work above switchboards is complete, and temporary HVAC system is operating and maintaining ambient temperature and humidity conditions at occupancy levels during the remainder of the construction period.
2. Rate equipment for continuous operation under the following conditions unless otherwise indicated:

a. Ambient Temperature: Not exceeding 104 deg F.

b. Altitude: Not exceeding 6600 feet.

C. Unusual Service Conditions: NEMA PB 2, as follows:

1. Ambient temperatures within limits specified.
2. Altitude not exceeding 6600 feet.

D. Interruption of Existing Electric Service: Do not interrupt electric service to facilities occupied by Owner or others unless permitted under the following conditions and then only after arranging to provide temporary electric service according to requirements indicated:

1. Notify Architect no fewer than seven days in advance of proposed interruption of electric service.
2. Indicate method of providing temporary electric service.
3. Do not proceed with interruption of electric service without Owner's written permission.
4. Comply with NFPA 70E.

1.11 COORDINATION

A. Coordinate layout and installation of switchboards and components with other construction that penetrates walls or is supported by them, including electrical and other types of equipment, raceways, piping, encumbrances to workspace clearance requirements, and adjacent surfaces. Maintain required workspace clearances and required clearances for equipment access doors and panels.

B. Coordinate sizes and locations of concrete bases with actual equipment provided. Cast anchor-bolt inserts into bases. Concrete, reinforcement, and formwork requirements are specified with concrete.

1.12 WARRANTY

A. Manufacturer's Warranty: Manufacturer agrees to repair or replace switchboard enclosures, buswork, overcurrent protective devices, accessories, and factory installed interconnection wiring that fail in materials or workmanship within specified warranty period.

1. Warranty Period: Three years from date of Substantial Completion.

B. Manufacturer's Warranty: Manufacturer's agrees to repair or replace surge protection devices that fail in materials or workmanship within specified warranty period.

1. Warranty Period: Five years from date of Substantial Completion.

PART 2 - PRODUCTS

2.1 PERFORMANCE REQUIREMENTS

A. Seismic Performance: Switchboards shall withstand the effects of earthquake motions determined according to ASCE/SEI 7.

1. Basis for Certification: Indicate whether withstand certification is based on actual test of assembled components or on calculation. Shake-table testing shall comply with ICC-ES AC156.
2. The term "withstand" means "the unit will remain in place without separation of any parts from the device when subjected to the seismic forces specified and the unit will be fully operational after the seismic event."

2.2 SWITCHBOARDS

A. Source Limitations: Obtain switchboards, overcurrent protective devices, components, and accessories from single source from single manufacturer.

B. Product Selection for Restricted Space: Drawings indicate maximum dimensions for switchboards including clearances between switchboards and adjacent surfaces and other items. Comply with indicated maximum dimensions.

C. Electrical Components, Devices, and Accessories: Listed and labeled as defined in NFPA 70, by a qualified testing agency, and marked for intended location and application.

D. Comply with NEMA PB 2.

E. Comply with NFPA 70.

F. Comply with UL 891.

G. Front-Connected, Front-Accessible Switchboards:

1. Main Devices: Fixed, individually mounted.
2. Branch Devices: Panel mounted.
3. Sections front and rear aligned.

H. Front- and Side-Accessible Switchboards:

1. Main Devices: Fixed, individually mounted.
2. Branch Devices: Panel mounted.
3. Section Alignment: Front aligned.

I. Front- and Rear-Accessible Switchboards:

1. Main Devices: Fixed, individually mounted.
2. Branch Devices: Panel and fixed, individually mounted.
3. Sections front and rear aligned.

J. Nominal System Voltage: As indicated on the plans.

K. Main-Bus Continuous: As indicated on the plans.

L. Seismic Requirements: Fabricate and test switchboards according to IEEE 344 to withstand seismic forces defined in Section 26 0548.16 "Seismic Controls for Electrical Systems."

1. Basis for Certification: Indicate whether withstand certification is based on actual test of assembled components or on calculation. Shake-table testing shall comply with ICC-ES AC156.

a. The term "withstand" means "the unit will remain in place without separation of any parts from the device when subjected to the seismic forces specified."
b. The term "withstand" means "the unit will remain in place without separation of any parts from the device when subjected to the seismic forces specified and the unit will be fully operational after the seismic event."

M. Indoor Enclosures: Steel, NEMA 250, Type 1.

N. Enclosure Finish for Indoor Units: Factory-applied finish in manufacturer's standard gray finish over a rust-inhibiting primer on treated metal surface.

O. Outdoor Enclosures: Type 3R.

1. Finish: Factory-applied finish in manufacturer's standard color; undersurfaces treated with corrosion-resistant undercoating.
2. Enclosure: Flat roof; bolt-on rear covers rear hinged doors for each section, with provisions for padlocking.
3. Doors: Personnel door at each end of aisle, minimum width of 30 inches; opening outwards; with panic hardware and provisions for padlocking. At least one door shall be sized to permit the largest single switchboard section to pass through without disassembling doors, hinges, or switchboard section.
4. Accessories: LED luminaires, ceiling mounted; wired to a three-way light switch at each end of aisle; ground-fault circuit interrupter (GFCI) duplex receptacle; emergency battery pack luminaire installed on wall of aisle midway between personnel doors.
5. Walk-in Aisle Heating and Ventilating:

a. Factory-installed electric unit heater(s), wall or ceiling mounted, with integral thermostat and disconnect and with capacities to maintain switchboard interior temperature of 40 deg F with outside design temperature of 0 deg F.
b. Factory-installed exhaust fan with capacities to maintain switchboard interior temperature of 100 deg F with outside design temperature of 90 deg F.
c. Ventilating openings complete with replaceable fiberglass air filters.
d. Thermostat: Single stage; wired to control heat and exhaust fan.

P. Barriers: Between adjacent switchboard sections.

Q. Insulation and isolation for main bus of main section and main and vertical buses of feeder sections.

R. Service Entrance Rating: Switchboards intended for use as service entrance equipment shall contain from one to six service disconnecting means with overcurrent protection, a neutral bus with disconnecting link, a grounding electrode conductor terminal, and a main bonding jumper.

S. Utility Metering Compartment: Barrier compartment and section complying with utility company's requirements; hinged sealable door; buses provisioned for mounting utility company's current transformers and potential transformers or potential taps as required by utility company. If separate vertical section is required for utility metering, match and align with basic switchboard. Provide service entrance label and necessary applicable service entrance features.

T. Bus Transition and Incoming Pull Sections: Matched and aligned with basic switchboard.

U. Removable, Hinged Rear Doors and Compartment Covers: Secured by standard bolts, for access to rear interior of switchboard.

V. Hinged Front Panels: Allow access to circuit breaker, metering, accessory, and blank compartments.

W. Pull Box on Top of Switchboard:

1. Adequate ventilation to maintain temperature in pull box within same limits as switchboard.
2. Set back from front to clear circuit-breaker removal mechanism.
3. Removable covers shall form top, front, and sides. Top covers at rear shall be easily removable for drilling and cutting.
4. Bottom shall be insulating, fire-resistive material with separate holes for cable drops into switchboard.
5. Cable supports shall be arranged to facilitate cabling and adequate to support cables indicated, including those for future installation.

X. Buses and Connections: Three phase, four wire unless otherwise indicated.

1. Provide phase bus arrangement A, B, C from front to back, top to bottom, and left to right when viewed from the front of the switchboard.
2. Phase- and Neutral-Bus Material: Hard-drawn copper of 98 percent conductivity, silver-plated.
3. Copper feeder circuit-breaker line connections.
4. Load Terminals: Insulated, rigidly braced, runback bus extensions, of same material as through buses, equipped with mechanical connectors for outgoing circuit conductors. Provide load terminals for future circuit-breaker positions at full-ampere rating of circuit-breaker position.
5. Ground Bus: 1/4-by-2-inch- hard-drawn copper of 98 percent conductivity, equipped with mechanical connectors for feeder and branch-circuit ground conductors.
6. Main-Phase Buses and Equipment-Ground Buses: Uniform capacity for entire length of switchboard's main and distribution sections. Provide for future extensions from both ends.
7. Disconnect Links:

    a. Isolate neutral bus from incoming neutral conductors.
    b. Bond neutral bus to equipment-ground bus for switchboards utilized as service equipment or separately derived systems.
8. Neutral Buses: 100 percent of the ampacity of phase buses unless otherwise indicated, equipped with mechanical connectors for outgoing circuit neutral cables. Brace bus extensions for busway feeder neutral bus.
9. Isolation Barrier Access Provisions: Permit checking of bus-bolt tightness.

Y. Future Devices: Equip compartments with mounting brackets, supports, bus connections, and appurtenances at full rating of circuit-breaker compartment.

Z. Bus-Bar Insulation: Factory-applied, flame-retardant, tape wrapping of individual bus bars or flame-retardant, spray-applied insulation. Minimum insulation temperature rating of 105 deg C.

AA. Fungus Proofing: Permanent fungicidal treatment for overcurrent protective devices and other components including instruments and instrument transformers.

BB. Switchboard shall be fully rated.

2.3 SURGE PROTECTION DEVICES

A. SPDs: Listed and labeled by an NRTL acceptable to authorities having jurisdiction as complying with UL 1449, Type 1.

B. Features and Accessories:

1. Integral disconnect switch.
2. Internal thermal protection that disconnects the SPD before damaging internal suppressor components.
3. Indicator light display for protection status.
4. Surge counter.

C. Peak Surge Current Rating: The minimum single-pulse surge current withstand rating per phase shall not be less than 200 kA. The peak surge current rating shall be the arithmetic sum of the ratings of the individual MOVs in a given mode.

D. Protection modes and UL 1449 VPR for grounded wye circuits with 480Y/277 V or 208Y/120 V, three-phase, four-wire circuits shall not exceed the following:

1. Line to Neutral: 1200 V for 480Y/277 V or 700 V for 208Y/120 V.
2. Line to Ground: 1200 V for 480Y/277 V or 1200 V for 208Y/120 V.
3. Line to Line: 2000 V for 480Y/277 V or 1000 V for 208Y/120 V.

E. Protection modes and UL 1449 VPR for 240/120 V, single-phase, three-wire circuits shall not exceed the following:

1. Line to Neutral: 700 V.
2. Line to Ground: 1000 V.
3. Line to Line: 1000 V.

F. SCCR: Equal or exceed 200 kA.

G. Nominal Rating: 20 kA.

2.4 DISCONNECTING AND OVERCURRENT PROTECTIVE DEVICES

A. Molded-Case Circuit Breaker (MCCB): Comply with UL 489, with interrupting capacity to meet available fault currents.

1. Thermal-Magnetic Circuit Breakers: Inverse time-current element for low-level overloads and instantaneous magnetic trip element for short circuits. Adjustable magnetic trip setting for circuit-breaker frame sizes 250 A and larger.
2. Adjustable Instantaneous-Trip Circuit Breakers: Magnetic trip element with front-mounted, field-adjustable trip setting.
3. Electronic trip circuit breakers with rms sensing; field-replaceable rating plug or field-replicable electronic trip; and the following field-adjustable settings:

a. Instantaneous trip.
b. Long- and short-time pickup levels.
c. Long and short time adjustments.
d. Ground-fault pickup level, time delay, and I squared t response.

4. Current-Limiting Circuit Breakers: Frame sizes 400 A and smaller; let-through ratings less than NEMA FU 1, RK-5.
5. Integrally Fused Circuit Breakers: Thermal-magnetic trip element with integral limiter-style fuse listed for use with circuit breaker; trip activation on fuse opening or on opening of fuse compartment door.
6. GFCI Circuit Breakers: Single- and double-pole configurations with Class A ground-fault protection (6-mA trip).
7. Ground-Fault Equipment Protection (GFEP) Circuit Breakers: Class B ground-fault protection (30-mA trip).
8. MCCB Features and Accessories:

    a. Standard frame sizes, trip ratings, and number of poles.
    b. Lugs: Mechanical style, suitable for number, size, trip ratings, and conductor material.
    c. Application Listing: Appropriate for application; Type SWD for switching fluorescent lighting loads; Type HID for feeding fluorescent and high-intensity discharge (HID) lighting circuits.
    d. Ground-Fault Protection: Integrally mounted relay and trip unit with adjustable pickup and time-delay settings, push-to-test feature, and ground-fault indicator.
    e. Zone-Selective Interlocking: Integral with electronic trip unit; for interlocking ground-fault protection function.
    f. Shunt Trip: 120-V trip coil energized from separate circuit, set to trip at 75 percent of rated voltage.
    g. Undervoltage Trip: Set to operate at 35 to 75 percent of rated voltage without intentional time delay.
    h. Key Interlock Kit: Externally mounted to prohibit circuit-breaker operation; key shall be removable only when circuit breaker is in off position.

B. Insulated-Case Circuit Breaker (ICCB): 100 percent rated, sealed, insulated-case power circuit breaker with interrupting capacity rating to meet available fault current.

1. Fixed circuit-breaker mounting.
2. Two-step, stored-energy closing.
3. Full-function, microprocessor-based trip units with interchangeable rating plug, trip indicators, and the following field-adjustable settings:

    a. Instantaneous trip.
    b. Time adjustments for long- and short-time pickup.
    c. Ground-fault pickup level, time delay, and I squared t response.

4. Zone-Selective Interlocking: Integral with electronic trip unit; for interlocking ground-fault protection function.
5. Remote trip indication and control.
6. Communication Capability: Web enabled integral Ethernet communication module and embedded Web server with factory-configured Web pages (HTML file format). Provide functions and features compatible with power monitoring and control system specified in Section 26 0913 "Electrical Power Monitoring and Control."
7. Key Interlock Kit: Externally mounted to prohibit circuit-breaker operation; key shall be removable only when circuit breaker is in off position.

C. Bolted-Pressure Contact Switch: Operating mechanism uses rotary-mechanical-bolting action to produce and maintain high clamping pressure on the switch blade after it engages the stationary contacts.
1. Main-Contact Interrupting Capability: Minimum of 12 times the switch current rating.
2. Operating Mechanism: Manual handle operation to close switch; stores energy in mechanism for opening and closing.

a. Electrical Trip: Operation of lever or push-button trip switch, or trip signal from ground-fault relay or remote-control device, causes switch to open.
b. Mechanical Trip: Operation of mechanical lever, push button, or other device causes switch to open.

3. Auxiliary Switches: Factory installed, SPDT, with leads connected to terminal block, and including one set more than quantity required for functional performance indicated.
4. Service-Rated Switches: Labeled for use as service equipment.
5. Ground-Fault Relay: Comply with UL 1053; self-powered type with mechanical ground-fault indicator, test function, tripping relay with internal memory, and three-phase current transformer/sensor.

a. Configuration: Integrally mounted relay and trip unit with adjustable pickup and time-delay settings, push-to-test feature, and ground-fault indicator.
b. Internal Memory: Integrates the cumulative value of intermittent arcing ground-fault currents and uses the effect to initiate tripping.
c. No-Trip Relay Test: Permits ground-fault simulation test without tripping switch.
d. Test Control: Simulates ground fault to test relay and switch (or relay only if "no-trip" mode is selected).

6. Open-Fuse Trip Device: Arranged to trip switch open if a phase fuse opens.

D. Fused Switch: NEMA KS 1, Type HD; clips to accommodate specified fuses; lockable handle.

E. Fuses are specified in Section 26 2813 "Fuses."

2.5 CONTROL POWER

A. Control Circuits: 120-V ac, supplied through secondary disconnecting devices from control-power transformer.

B. Control Circuits: 120-V ac, supplied from remote branch circuit.

C. Electrically Interlocked Main and Tie Circuit Breakers: Two control-power transformers in separate compartments, with interlocking relays, connected to the primary side of each control-power transformer at the line side of the associated main circuit breaker. 120-V secondaries connected through automatic transfer relays to ensure a fail-safe automatic transfer scheme.

D. Control-Power Fuses: Primary and secondary fuses for current-limiting and overload protection of transformer and fuses for protection of control circuits.

E. Control Wiring: Factory installed, with bundling, lacing, and protection included. Provide flexible conductors for No. 8 AWG and smaller, for conductors across hinges, and for conductors for interconnections between shipping units.

2.6 ACCESSORY COMPONENTS AND FEATURES

A. Portable Test Set: For testing functions of solid-state trip devices without removing from switchboard. Include relay and meter test plugs suitable for testing switchboard meters and switchboard class relays.

B. Spare-Fuse Cabinet: Suitably identified, wall-mounted, lockable, compartmented steel box or cabinet. Arrange for wall mounting.

C. Mounting Accessories: For anchors, mounting channels, bolts, washers, and other mounting accessories, comply with requirements in Section 26 0548.16 "Seismic Controls for Electrical Systems" or manufacturer's instructions.

2.7 IDENTIFICATION

A. Mimic Bus: Continuously integrated mimic bus factory applied to front of switchboard. Arrange in single-line diagram format, using symbols and letter designations consistent with final mimic-bus diagram.

B. Coordinate mimic-bus segments with devices in switchboard sections to which they are applied. Produce a concise visual presentation of principal switchboard components and connections.

C. Service Equipment Label: NRTL labeled for use as service equipment for switchboards with one or more service disconnecting and overcurrent protective devices.

PART 3 - EXECUTION

3.1 EXAMINATION

A. Receive, inspect, handle, and store switchboards according to NECA 400.

1. Lift or move panelboards with spreader bars and manufacturer-supplied lifting straps following manufacturer's instructions.
2. Use rollers, slings, or other manufacturer-approved methods if lifting straps are not furnished.
3. Protect from moisture, dust, dirt, and debris during storage and installation.
4. Install temporary heating during storage per manufacturer's instructions.

B. Examine switchboards before installation. Reject switchboards that are moisture damaged or physically damaged.

C. Examine elements and surfaces to receive switchboards for compliance with installation tolerances and other conditions affecting performance of the Work or that affect the performance of the equipment.

D. Proceed with installation only after unsatisfactory conditions have been corrected.

3.2 INSTALLATION

A. Install switchboards and accessories according to NECA 400.

B. Equipment Mounting: Install switchboards on concrete base, 4-inch nominal thickness. Comply with requirements for concrete base specified in Section 03 3000 "Cast-in-Place Concrete."

1. Install conduits entering underneath the switchboard, entering under the vertical section where the conductors will terminate. Install with couplings flush with the concrete base. Extend 2 inches above concrete base after switchboard is anchored in place.
2. Install dowel rods to connect concrete base to concrete floor. Unless otherwise indicated, install dowel rods on 18-inch centers around the full perimeter of concrete base.

3. For supported equipment, install epoxy-coated anchor bolts that extend through concrete base and anchor into structural concrete floor.
4. Place and secure anchorage devices. Use setting drawings, templates, diagrams, instructions, and directions furnished with items to be embedded.
5. Install anchor bolts to elevations required for proper attachment to switchboards.
6. Anchor switchboard to building structure at the top of the switchboard if required or recommended by the manufacturer.

C. Temporary Lifting Provisions: Remove temporary lifting eyes, channels, straps and brackets, and temporary blocking of moving parts from switchboard units and components.

D. Comply with mounting and anchoring requirements specified in Section 26 0548.16 "Seismic Controls for Electrical Systems."

E. Operating Instructions: Frame and mount the printed basic operating instructions for switchboards, including control and key interlocking sequences and emergency procedures. Fabricate frame of finished wood or metal and cover instructions with clear acrylic plastic. Mount on front of switchboards.

F. Install filler plates in unused spaces of panel-mounted sections.

G. Install overcurrent protective devices, surge protection devices, and instrumentation.

1. Set field-adjustable switches and circuit-breaker trip ranges.

H. Install spare-fuse cabinet.

I. Comply with NECA 1.

3.3 CONNECTIONS

A. Bond conduits entering underneath the switchboard to the equipment ground bus with a bonding conductor sized per NFPA 70.

B. Support and secure conductors within the switchboard according to NFPA 70.

C. Extend insulated equipment grounding cable to busway ground connection and support cable at intervals in vertical run.

3.4 IDENTIFICATION

A. Identify field-installed conductors, interconnecting wiring, and components; provide warning signs complying with requirements for identification specified in Section 26 0553 "Identification for Electrical Systems."

B. Switchboard Nameplates: Label each switchboard compartment with a nameplate complying with requirements for identification specified in Section 26 0553 "Identification for Electrical Systems."

C. Device Nameplates: Label each disconnecting and overcurrent protective device and each meter and control device mounted in compartment doors with a nameplate complying with requirements for identification specified in Section 26 0553 "Identification for Electrical Systems."

3.5 FIELD QUALITY CONTROL

A. Testing Agency: Engage a qualified testing agency to perform tests and inspections.

B. Perform the following tests and inspections:

1. Acceptance Testing:

   a. Test insulation resistance for each switchboard bus, component, connecting supply, feeder, and control circuit. Open control and metering circuits within the switchboard, and remove neutral connection to surge protection and other electronic devices prior to insulation test. Reconnect after test.
   b. Test continuity of each circuit.

2. Test ground-fault protection of equipment for service equipment per NFPA 70.
3. Perform each visual and mechanical inspection and electrical test stated in NETA Acceptance Testing Specification. Certify compliance with test parameters.
4. Correct malfunctioning units on-site where possible, and retest to demonstrate compliance; otherwise, replace with new units and retest.
5. Perform the following infrared scan tests and inspections, and prepare reports:

   a. Initial Infrared Scanning: After Substantial Completion, but not more than 60 days after Final Acceptance, perform an infrared scan of each switchboard. Remove front and rear panels so joints and connections are accessible to portable scanner.
   b. Follow-up Infrared Scanning: Perform an additional follow-up infrared scan of each switchboard 11 months after date of Substantial Completion.
   c. Instruments and Equipment:

      1) Use an infrared scanning device designed to measure temperature or to detect significant deviations from normal values. Provide calibration record for device.

6. Test and adjust controls, remote monitoring, and safeties. Replace damaged and malfunctioning controls and equipment.

C. Switchboard will be considered defective if it does not pass tests and inspections.

D. Prepare test and inspection reports, including a certified report that identifies switchboards included and that describes scanning results. Include notation of deficiencies detected, remedial action taken, and observations after remedial action.

3.6 ADJUSTING

A. Adjust moving parts and operable components to function smoothly, and lubricate as recommended by manufacturer.

B. Set field-adjustable circuit-breaker trip ranges as specified in Section 26 0573 "Overcurrent Protective Device Coordination Study."

3.7 PROTECTION

A. Temporary Heating: Apply temporary heat, to maintain temperature according to manufacturer's written instructions, until switchboard is ready to be energized and placed into service.

3.8 DEMONSTRATION

A. Train Owner's maintenance personnel to adjust, operate, and maintain switchboards, overcurrent protective devices, instrumentation, and accessories, and to use and reprogram microprocessor-based trip, monitoring, and communication units.

END OF SECTION

SECTION 26 2416

PANELBOARDS

PART 1 - GENERAL

1.1 RELATED DOCUMENTS

A. Drawings and general provisions of the Contract, including General and Supplementary Conditions and Division 01 Specification Sections, apply to this Section.

1.2 SUMMARY

A. Section Includes:

1. Distribution panelboards.
2. Lighting and appliance branch-circuit panelboards.
3. Load centers.
4. Electronic-grade panelboards.

1.3 DEFINITIONS

A. ATS: Acceptance testing specification.

B. GFCI: Ground-fault circuit interrupter.

C. GFEP: Ground-fault equipment protection.

D. HID: High-intensity discharge.

E. MCCB: Molded-case circuit breaker.

F. SPD: Surge protective device.

G. VPR: Voltage protection rating.

1.4 ACTION SUBMITTALS

A. Product Data: For each type of panelboard.

1. Include materials, switching and overcurrent protective devices, SPDs, accessories, and components indicated.
2. Include dimensions and manufacturers' technical data on features, performance, electrical characteristics, ratings, and finishes.

B. Shop Drawings: For each panelboard and related equipment.

1. Include dimensioned plans, elevations, sections, and details.

2. Show tabulations of installed devices with nameplates, conductor termination sizes, equipment features, and ratings.
3. Detail enclosure types including mounting and anchorage, environmental protection, knockouts, corner treatments, covers and doors, gaskets, hinges, and locks.
4. Detail bus configuration, current, and voltage ratings.
5. Short-circuit current rating of panelboards and overcurrent protective devices.
6. Include evidence of NRTL listing for SPD as installed in panelboard.
7. Detail features, characteristics, ratings, and factory settings of individual overcurrent protective devices and auxiliary components.
8. Include wiring diagrams for power, signal, and control wiring.
9. Key interlock scheme drawing and sequence of operations.
10. Include time-current coordination curves for each type and rating of overcurrent protective device included in panelboards. Submit on translucent log-log graft paper; include selectable ranges for each type of overcurrent protective device. Include an Internet link for electronic access to downloadable PDF of the coordination curves.

1.5 INFORMATIONAL SUBMITTALS

A. Qualification Data: For testing agency.

B. Panelboard Schedules: For installation in panelboards. Submit final versions after load balancing.

1.6 CLOSEOUT SUBMITTALS

A. Operation and Maintenance Data: For panelboards and components to include in emergency, operation, and maintenance manuals. In addition to items specified in Section 01 7823 "Operation and Maintenance Data," include the following:

1. Manufacturer's written instructions for testing and adjusting overcurrent protective devices.
2. Time-current curves, including selectable ranges for each type of overcurrent protective device that allows adjustments.

1.7 MAINTENANCE MATERIAL SUBMITTALS

A. Furnish extra materials that match products installed and that are packaged with protective covering for storage and identified with labels describing contents.

1. Keys: Two spares for each type of panelboard cabinet lock.
2. Circuit Breakers Including GFCI and GFEP Types: Two spares for each panelboard.
3. Fuses for Fused Switches: Equal to 10 percent of quantity installed for each size and type, but no fewer than three of each size and type.
4. Fuses for Fused Power-Circuit Devices: Equal to 10 percent of quantity installed for each size and type, but no fewer than three of each size and type.

1.8 QUALITY ASSURANCE

A. Manufacturer Qualifications: ISO 9001 or 9002 certified.

1.9 DELIVERY, STORAGE, AND HANDLING

A. Remove loose packing and flammable materials from inside panelboards; install temporary electric heating (250 W per panelboard) to prevent condensation.

B. Handle and prepare panelboards for installation according to NECA 407.

1.10 FIELD CONDITIONS

A. Environmental Limitations:

1. Do not deliver or install panelboards until spaces are enclosed and weathertight, wet work in spaces is complete and dry, work above panelboards is complete, and temporary HVAC system is operating and maintaining ambient temperature and humidity conditions at occupancy levels during the remainder of the construction period.
2. Rate equipment for continuous operation under the following conditions unless otherwise indicated:

    a. Ambient Temperature: Not exceeding minus 22 deg F to plus 104 deg F.
    b. Altitude: Not exceeding 6600 feet.

B. Service Conditions: NEMA PB 1, usual service conditions, as follows:

1. Ambient temperatures within limits specified.
2. Altitude not exceeding 6600 feet.

C. Interruption of Existing Electric Service: Do not interrupt electric service to facilities occupied by Owner or others unless permitted under the following conditions and then only after arranging to provide temporary electric service according to requirements indicated:

1. Notify Architect no fewer than two days in advance of proposed interruption of electric service.
2. Do not proceed with interruption of electric service without Owner's written permission.
3. Comply with NFPA 70E.

1.11 WARRANTY

A. Manufacturer's Warranty: Manufacturer agrees to repair or replace panelboards that fail in materials or workmanship within specified warranty period.

1. Panelboard Warranty Period: 18 months from date of Substantial Completion.

B. Special Warranty: Manufacturer's standard form in which manufacturer agrees to repair or replace SPD that fails in materials or workmanship within specified warranty period.

1. SPD Warranty Period: Five years from date of Substantial Completion.

PART 2 - PRODUCTS

2.1 PANELBOARDS AND LOAD CENTERS COMMON REQUIREMENTS

A. Fabricate and test panelboards according to IEEE 344 to withstand seismic forces defined in Section 26 0548.16 "Seismic Controls for Electrical Systems."

B. Product Selection for Restricted Space: Drawings indicate maximum dimensions for panelboards including clearances between panelboards and adjacent surfaces and other items. Comply with indicated maximum dimensions.

C. Electrical Components, Devices, and Accessories: Listed and labeled as defined in NFPA 70, by a qualified testing agency, and marked for intended location and application.

D. Comply with NEMA PB 1.

E. Comply with NFPA 70.

F. Enclosures: Flush and Surface-mounted, dead-front cabinets.

1. Rated for environmental conditions at installed location.

    a. Indoor Dry and Clean Locations: NEMA 250, Type 1.
    b. Outdoor Locations: NEMA 250, Type 3R.
    c. Kitchen and Wash-Down Areas: NEMA 250, Type 4X, stainless steel.
    d. Other Wet or Damp Indoor Locations: NEMA 250, Type 4.
    e. Indoor Locations Subject to Dust, Falling Dirt, and Dripping Noncorrosive Liquids: NEMA 250, Type 12.

2. Height: 84 inches maximum.
3. Front: Secured to box with concealed trim clamps. For surface-mounted fronts, match box dimensions; for flush-mounted fronts, overlap box. Trims shall cover all live parts and shall have no exposed hardware.
4. Hinged Front Cover: Entire front trim hinged to box and with standard door within hinged trim cover. Trims shall cover all live parts and shall have no exposed hardware.
5. Skirt for Surface-Mounted Panelboards: Same gage and finish as panelboard front with flanges for attachment to panelboard, wall, and ceiling or floor.
6. Gutter Extension and Barrier: Same gage and finish as panelboard enclosure; integral with enclosure body. Arrange to isolate individual panel sections.
7. Finishes:

    a. Panels and Trim: Steel and galvanized steel, factory finished immediately after cleaning and pretreating with manufacturer's standard two-coat, baked-on finish consisting of prime coat and thermosetting topcoat.
    b. Back Boxes: Same finish as panels and trim.
    c. Fungus Proofing: Permanent fungicidal treatment for overcurrent protective devices and other components.

G. Incoming Mains:

1. Location: Convertible between top and bottom.
2. Main Breaker: Main lug interiors up to 400 amperes shall be field convertible to main breaker.

H. Phase, Neutral, and Ground Buses:

1. Material: Hard-drawn copper, 98 percent conductivity.

    a. Plating shall run entire length of bus.
    b. Bus shall be fully rated the entire length.

2. Interiors shall be factory assembled into a unit. Replacing switching and protective devices shall not disturb adjacent units or require removing the main bus connectors.
3. Equipment Ground Bus: Adequate for feeder and branch-circuit equipment grounding conductors; bonded to box.
4. Isolated Ground Bus: Adequate for branch-circuit isolated ground conductors; insulated from box.
5. Full-Sized Neutral: Equipped with full-capacity bonding strap for service entrance applications. Mount electrically isolated from enclosure. Do not mount neutral bus in gutter.
6. Extra-Capacity Neutral Bus: Neutral bus rated 200 percent of phase bus and listed and labeled by an NRTL acceptable to authority having jurisdiction, as suitable for nonlinear loads in electronic-grade panelboards and others designated on Drawings. Connectors shall be sized for double-sized or parallel conductors as indicated on Drawings. Do not mount neutral bus in gutter.
7. Split Bus: Vertical buses divided into individual vertical sections.

I. Conductor Connectors: Suitable for use with conductor material and sizes.

1. Material: Hard-drawn copper, 98 percent conductivity.
2. Terminations shall allow use of 75 deg C rated conductors without derating.
3. Size: Lugs suitable for indicated conductor sizes, with additional gutter space, if required, for larger conductors.
4. Main and Neutral Lugs: Compression type, with a lug on the neutral bar for each pole in the panelboard.
5. Ground Lugs and Bus-Configured Terminators: Mechanical type, with a lug on the bar for each pole in the panelboard.
6. Feed-Through Lugs: Mechanical type, suitable for use with conductor material. Locate at opposite end of bus from incoming lugs or main device.
7. Subfeed (Double) Lugs: Mechanical type suitable for use with conductor material. Locate at same end of bus as incoming lugs or main device.
8. Gutter-Tap Lugs: Mechanical type suitable for use with conductor material and with matching insulating covers. Locate at same end of bus as incoming lugs or main device.
9. Extra-Capacity Neutral Lugs: Rated 200 percent of phase lugs mounted on extra-capacity neutral bus.

J. NRTL Label: Panelboards or load centers shall be labeled by an NRTL acceptable to authority having jurisdiction for use as service equipment with one or more main service disconnecting and overcurrent protective devices. Panelboards or load centers shall have meter enclosures, wiring, connections, and other provisions for utility metering. Coordinate with utility company for exact requirements.

K. Future Devices: Panelboards or load centers shall have mounting brackets, bus connections, filler plates, and necessary appurtenances required for future installation of devices.

1. Percentage of Future Space Capacity: 20 percent.

L. Panelboard Short-Circuit Current Rating: Fully rated to interrupt symmetrical short-circuit current available at terminals. Assembly listed by an NRTL for 100 percent interrupting capacity.

1. Panelboards and overcurrent protective devices rated 240 V or less shall have short-circuit ratings as shown on Drawings, but not less than 10,000 A rms symmetrical.
2. Panelboards and overcurrent protective devices rated above 240 V and less than 600 V shall have short-circuit ratings as shown on Drawings, but not less than 14,000 A rms symmetrical.

2.2 PERFORMANCE REQUIREMENTS

A. Seismic Performance: Panelboards shall withstand the effects of earthquake motions determined according to ASCE/SEI 7.

1. The term "withstand" means "the unit will remain in place without separation of any parts from the device when subjected to the seismic forces specified."

B. Surge Suppression: Factory installed as an integral part of indicated panelboards, complying with UL 1449 SPD Type 1.

2.3 POWER PANELBOARDS

A. Panelboards: NEMA PB 1, distribution type.

B. Doors: Secured with vault-type latch with tumbler lock; keyed alike.

1. For doors more than 36 inches high, provide two latches, keyed alike.

C. Mains: Circuit breaker.

D. Branch Overcurrent Protective Devices for Circuit-Breaker Frame Sizes 125 A and Smaller: Bolt-on circuit breakers.

E. Branch Overcurrent Protective Devices for Circuit-Breaker Frame Sizes Larger Than 125 A: Bolt-on circuit breakers.

F. Branch Overcurrent Protective Devices: Fused switches.

2.4 LIGHTING AND APPLIANCE BRANCH-CIRCUIT PANELBOARDS

A. Panelboards: NEMA PB 1, lighting and appliance branch-circuit type.

B. Mains: Circuit breaker.

C. Branch Overcurrent Protective Devices: Bolt-on circuit breakers, replaceable without disturbing adjacent units.

D. Doors: Concealed hinges; secured with flush latch with tumbler lock; keyed alike.

E. Doors: Door-in-door construction with concealed hinges; secured with multipoint latch with tumbler lock; keyed alike. Outer door shall permit full access to the panel interior. Inner door shall permit access to breaker operating handles and labeling, but current carrying terminals and bus shall remain concealed.

2.5 LOAD CENTERS

A. Load Centers: Comply with UL 67.

B. Mains: Circuit breaker.

C. Branch Overcurrent Protective Devices: Plug-in circuit breakers, replaceable without disturbing adjacent units.

D. Doors: Concealed hinges secured with flush latch with tumbler lock; keyed alike.

E. Conductor Connectors: Mechanical type for main, neutral, and ground lugs and buses.

2.6 PANELBOARDS SERVING GAMES AND DATA CENTER LOADS

A. Panelboards: NEMA PB 1; with factory-installed, integral SPD; labeled by an NRTL for compliance with UL 67 and UL 1449 after installing SPD.

B. Doors: Secured with vault-type latch with tumbler lock; keyed alike.

C. Main Overcurrent Protective Devices: Bolt-on thermal-magnetic circuit breakers.

D. Branch Overcurrent Protective Devices: Bolt-on thermal-magnetic circuit breakers.

E. SPD.

1. Peak Surge Current Rating: The minimum single-pulse surge current withstand rating per phase shall not be less than 100 kA. The peak surge current rating shall be the arithmetic sum of the ratings of the individual MOVs in a given mode.
2. Protection modes and UL 1449 VPR for grounded wye circuits with 480Y/277 V or 208Y/120 V, three-phase, four-wire circuits shall not exceed the following:

    a. Line to Neutral: 1200 V for 480Y/277 V or 700 V for 208Y/120 V.
    b. Line to Ground: 1200 V for 480Y/277 V or 700 V for 208Y/120 V.
    c. Neutral to Ground: 1200 V for 480Y/277 or V 700 V for 208Y/120 V.
    d. Line to Line: 2000 V for 480Y/277 V or 1200 V for 208Y/120 V.

3. Protection modes and UL 1449 VPR for 240/120-V, single-phase, three-wire circuits shall not exceed the following:

    a. Line to Neutral: 700 V.
    b. Line to Ground: 700 V.
    c. Neutral to Ground: 700 V.
    d. Line to Line: 1200 V.

4. SCCR: Equal to the SCCR of the panelboard in which installed or exceed 100 kA.
5. Nominal Rating: 20 kA.

F. Buses:

1. Copper phase and neutral buses; 200 percent capacity neutral bus and lugs.
2. Copper equipment and isolated ground buses.

2.7 DISCONNECTING AND OVERCURRENT PROTECTIVE DEVICES

A. MCCB: Comply with UL 489, with interrupting capacity to meet available fault currents.

1. Thermal-Magnetic Circuit Breakers:

    a. Inverse time-current element for low-level overloads.
    b. Instantaneous magnetic trip element for short circuits.
    c. Adjustable magnetic trip setting for circuit-breaker frame sizes 250 A and larger.

2. Adjustable Instantaneous-Trip Circuit Breakers: Magnetic trip element with front-mounted, field-adjustable trip setting.
3. Electronic Trip Circuit Breakers:

    a. RMS sensing.
    b. Field-replaceable rating plug or electronic trip.
    c. Digital display of settings, trip targets, and indicated metering displays.
    d. Multi-button keypad to access programmable functions and monitored data.
    e. Ten-event, trip-history log. Each trip event shall be recorded with type, phase, and magnitude of fault that caused the trip.
    f. Integral test jack for connection to portable test set or laptop computer.
    g. Field-Adjustable Settings:

        1) Instantaneous trip.
        2) Long- and short-time pickup levels.
        3) Long and short time adjustments.
        4) Ground-fault pickup level, time delay, and I squared T response.

4. Current-Limiting Circuit Breakers: Frame sizes 400 A and smaller; let-through ratings less than NEMA FU 1, RK-5.
5. GFCI Circuit Breakers: Single- and double-pole configurations with Class A ground-fault protection (6-mA trip).
6. GFEP Circuit Breakers: Class B ground-fault protection (30-mA trip).
7. Arc-Fault Circuit Interrupter Circuit Breakers: Comply with UL 1699; 120/240-V, single-pole configuration.
8. Subfeed Circuit Breakers: Vertically mounted.
9. MCCB Features and Accessories:

    a. Standard frame sizes, trip ratings, and number of poles.
    b. Breaker handle indicates tripped status.
    c. UL listed for reverse connection without restrictive line or load ratings.
    d. Lugs: Mechanical style, suitable for number, size, trip ratings, and conductor materials.
    e. Application Listing: Appropriate for application; Type SWD for switching fluorescent lighting loads; Type HID for feeding fluorescent and HID lighting circuits.
    f. Ground-Fault Protection: Integrally mounted relay and trip unit with adjustable pickup and time-delay settings, push-to-test feature, and ground-fault indicator.
    g. Shunt Trip: 120-V trip coil energized from separate circuit, set to trip at 75 percent of rated voltage.
    h. Undervoltage Trip: Set to operate at 35 to 75 percent of rated voltage with field-adjustable 0.1- to 0.6-second time delay.
    i. Rating Plugs: Three-pole breakers with ampere ratings greater than 150 amperes shall have interchangeable rating plugs or electronic adjustable trip units.
    j. Alarm Switch: Single-pole, normally open contact that actuates only when circuit breaker trips.

k. Key Interlock Kit: Externally mounted to prohibit circuit-breaker operation; key shall be removable only when circuit breaker is in off position.
l. Handle Padlocking Device: Fixed attachment, for locking circuit-breaker handle in on or off position.
m. Handle Clamp: Loose attachment, for holding circuit-breaker handle in on position.

B. Fused Switch: NEMA KS 1, Type HD; clips to accommodate specified fuses; lockable handle.

1. Fuses and Spare-Fuse Cabinet: Comply with requirements specified in Section 26 2813 "Fuses."
2. Fused Switch Features and Accessories:

a. Standard ampere ratings and number of poles.
b. Mechanical cover interlock with a manual interlock override, to prevent the opening of the cover when the switch is in the on position. The interlock shall prevent the switch from being turned on with the cover open. The operating handle shall have lock-off means with provisions for three padlocks.

2.8 IDENTIFICATION

A. Panelboard Label: Manufacturer's name and trademark, voltage, amperage, number of phases, and number of poles shall be located on the interior of the panelboard door.

B. Breaker Labels: Faceplate shall list current rating, UL and IEC certification standards, and AIC rating.

C. Circuit Directory: Directory card inside panelboard door, mounted in transparent card holder.

1. Circuit directory shall identify specific purpose with detail sufficient to distinguish it from all other circuits.

D. Circuit Directory: Computer-generated circuit directory mounted inside panelboard door with transparent plastic protective cover.

1. Circuit directory shall identify specific purpose with detail sufficient to distinguish it from all other circuits.

2.9 ACCESSORY COMPONENTS AND FEATURES

A. Accessory Set: Include tools and miscellaneous items required for overcurrent protective device test, inspection, maintenance, and operation.

B. Portable Test Set: For testing functions of solid-state trip devices without removing from panelboard. Include relay and meter test plugs suitable for testing panelboard meters and switchboard class relays.

PART 3 - EXECUTION

3.1 EXAMINATION

A. Verify actual conditions with field measurements prior to ordering panelboards to verify that equipment fits in allocated space in, and comply with, minimum required clearances specified in NFPA 70.

B. Receive, inspect, handle, and store panelboards according to NECA 407.

C. Examine panelboards before installation. Reject panelboards that are damaged, rusted, or have been subjected to water saturation.

D. Examine elements and surfaces to receive panelboards for compliance with installation tolerances and other conditions affecting performance of the Work.

E. Proceed with installation only after unsatisfactory conditions have been corrected.

3.2 INSTALLATION

A. Coordinate layout and installation of panelboards and components with other construction that penetrates walls or is supported by them, including electrical and other types of equipment, raceways, piping, encumbrances to workspace clearance requirements, and adjacent surfaces. Maintain required workspace clearances and required clearances for equipment access doors and panels.

B. Comply with NECA 1.

C. Install panelboards and accessories according to NECA 407.

D. Equipment Mounting:

1. Install panelboards on cast-in-place concrete equipment base(s). Comply with requirements for equipment bases and foundations specified in Section 03 3000 "Cast-in-Place Concrete."
2. Attach panelboard to the vertical finished or structural surface behind the panelboard.
3. Comply with requirements for seismic control devices specified in Section 26 0548.16 "Seismic Controls for Electrical Systems."

E. Temporary Lifting Provisions: Remove temporary lifting eyes, channels, and brackets and temporary blocking of moving parts from panelboards.

F. Comply with mounting and anchoring requirements specified in Section 26 0548.16 "Seismic Controls for Electrical Systems."

G. Mount top of trim 90 inches above finished floor unless otherwise indicated.

H. Mount panelboard cabinet plumb and rigid without distortion of box.

I. Mount recessed panelboards with fronts uniformly flush with wall finish and mating with back box.

J. Mount surface-mounted panelboards to steel slotted supports 5/8 inch in depth. Orient steel slotted supports vertically.

K. Install overcurrent protective devices and controllers not already factory installed.

1. Set field-adjustable, circuit-breaker trip ranges.
2. Tighten bolted connections and circuit breaker connections using calibrated torque wrench or torque screwdriver per manufacturer's written instructions.

L. Make grounding connections and bond neutral for services and separately derived systems to ground. Make connections to grounding electrodes, separate grounds for isolated ground bars, and connections to separate ground bars.

M. Install filler plates in unused spaces.

N. Stub four 1-inch empty conduits from panelboard into accessible ceiling space or space designated to be ceiling space in the future. Stub four 1-inch empty conduits into raised floor space or below slab not on grade.

O. Arrange conductors in gutters into groups and bundle and wrap with wire ties after completing load balancing.

P. Mount spare fuse cabinet in accessible location.

3.3 IDENTIFICATION

A. Identify field-installed conductors, interconnecting wiring, and components; install warning signs complying with requirements in Section 26 0553 "Identification for Electrical Systems."

B. Create a directory to indicate installed circuit loads after balancing panelboard loads; incorporate Owner's final room designations. Obtain approval before installing. Handwritten directories are not acceptable. Install directory inside panelboard door.

C. Panelboard Nameplates: Label each panelboard with a nameplate complying with requirements for identification specified in Section 26 0553 "Identification for Electrical Systems."

D. Device Nameplates: Label each branch circuit device in power panelboards with a nameplate complying with requirements for identification specified in Section 26 0553 "Identification for Electrical Systems."

E. Install warning signs complying with requirements in Section 26 0553 "Identification for Electrical Systems" identifying source of remote circuit.

3.4 FIELD QUALITY CONTROL

A. Manufacturer's Field Service: Engage a factory-authorized service representative to inspect, test, and adjust components, assemblies, and equipment installations, including connections.

B. Perform tests and inspections.

1. Manufacturer's Field Service: Engage a factory-authorized service representative to inspect components, assemblies, and equipment installations, including connections, and to assist in testing.

C. Acceptance Testing Preparation:

1. Test insulation resistance for each panelboard bus, component, connecting supply, feeder, and control circuit.
2. Test continuity of each circuit.

D. Tests and Inspections:

1. Perform each visual and mechanical inspection and electrical test for low-voltage air circuit breakers and low-voltage surge arrestors stated in NETA ATS, Paragraph 7.6 Circuit Breakers. Perform optional tests. Certify compliance with test parameters.
2. Correct malfunctioning units on-site, where possible, and retest to demonstrate compliance; otherwise, replace with new units and retest.
3. Perform the following infrared scan tests and inspections and prepare reports:

    a. Initial Infrared Scanning: After Substantial Completion, but not more than 60 days after Final Acceptance, perform an infrared scan of each panelboard. Remove front panels so joints and connections are accessible to portable scanner.
    b. Follow-up Infrared Scanning: Perform an additional follow-up infrared scan of each panelboard 11 months after date of Substantial Completion.
    c. Instruments and Equipment:

        1) Use an infrared scanning device designed to measure temperature or to detect significant deviations from normal values. Provide calibration record for device.

E. Panelboards will be considered defective if they do not pass tests and inspections.

F. Prepare test and inspection reports, including a certified report that identifies panelboards included and that describes scanning results, with comparisons of the two scans. Include notation of deficiencies detected, remedial action taken, and observations after remedial action.

3.5 ADJUSTING

A. Adjust moving parts and operable components to function smoothly, and lubricate as recommended by manufacturer.

B. Set field-adjustable circuit-breaker trip ranges as specified in Section 26 0573 "Overcurrent Protective Device Coordination Study."

C. Load Balancing: After Substantial Completion, but not more than 60 days after Final Acceptance, measure load balancing and make circuit changes. Prior to making circuit changes to achieve load balancing, inform Architect of effect on phase color coding.

1. Measure loads during period of normal facility operations.
2. Perform circuit changes to achieve load balancing outside normal facility operation schedule or at times directed by the Architect. Avoid disrupting services such as fax machines and on-line data processing, computing, transmitting, and receiving equipment.
3. After changing circuits to achieve load balancing, recheck loads during normal facility operations. Record load readings before and after changing circuits to achieve load balancing.
4. Tolerance: Maximum difference between phase loads, within a panelboard, shall not exceed 20 percent.

3.6 PROTECTION

A. Temporary Heating: Prior to energizing panelboards, apply temporary heat to maintain temperature according to manufacturer's written instructions.

END OF SECTION

SECTION 26 2713

ELECTRICITY METERING

PART 1 - GENERAL

1.1 RELATED DOCUMENTS

A. Drawings and general provisions of the Contract, including General and Supplementary Conditions and Division 01 Specification Sections, apply to this Section.

1.2 SUMMARY

A. Section includes work to accommodate utility company revenue meters, and Owner's electricity meters used to manage the electrical power system.

1.3 DEFINITIONS

A. KY or KYZ Pulse: Term used by the metering industry to describe a method of measuring consumption of electricity (kWh) that is based on a relay opening and closing in response to the rotation of the disk in the meter. Electronic meters generate pulses electronically.

1.4 ACTION SUBMITTALS

A. Product Data:

1. For each type of meter.
2. For metering infrastructure components.

B. Shop Drawings: For electricity-metering equipment.

1. Include elevation views of front panels of control and indicating devices and control stations.
2. Include diagrams for power, signal, and control wiring.
3. Wire Termination Diagrams and Schedules: Include diagrams for power, signal, and control wiring. Identify terminals and wiring designations and color-codes to facilitate installation, operation, and maintenance. Indicate recommended types, wire sizes, and circuiting arrangements for field-installed wiring, and show circuit protection features. Differentiate between manufacturer-installed and field-installed wiring.
4. Include series-combination rating data for modular meter centers with main disconnect device.

1.5 INFORMATIONAL SUBMITTALS

A. Qualification Data: For testing agency.

B. Field quality-control reports.

C. Sample Warranty: For special warranty.

1.6 FIELD CONDITIONS

A. Interruption of Existing Electrical Service: Do not interrupt electrical service to facilities occupied by Owner or others unless permitted under the following conditions and then only after arranging to provide temporary electrical service according to requirements indicated:

1. Architect shall be notified and issued written permission no fewer than two days in advance of proposed interruption of electrical service.

1.7 QUALITY ASSURANCE

A. Testing Agency Qualifications: An NRTL.

1.8 WARRANTY

A. Special Warranty: Manufacturer agrees to repair or replace components of metering equipment that fail in materials or workmanship within specified warranty period.

1. Failures include, but are not limited to, the following:

a. Damage from transient voltage surges.

2. Warranty Period: Cost to repair or replace any parts for two years from date of Substantial Completion.
3. Extended Warranty Period: Cost of replacement parts (materials only, f.o.b. the nearest shipping point to Project site), for eight years, that failed in service due to transient voltage surges.

1.9 COORDINATION

A. Electrical Service Connections:

1. Coordinate with utility companies and utility-furnished components.

a. Comply with requirements of utility providing electrical power services.
b. Coordinate installation and connection of utilities and services, including provision for electricity-metering components.

PART 2 - PRODUCTS

2.1 SYSTEM DESCRIPTION

A. Electrical Components, Devices, and Accessories: Listed and labeled as defined in NFPA 70, by a qualified testing agency, and marked for intended location and application.

B. Comply with UL 916.

2.2 UTILITY METERING INFRASTRUCTURE

A. Install metering accessories furnished by the utility company, complying with its requirements.

B. Utility-Furnished Meters: Connect data transmission facility of metering equipment installed by the Utility.

1. Data Transmission: Transmit pulse data over control-circuit conductors, classified as Class 1 per NFPA 70, Article 725.

C. Current-Transformer Cabinets: Comply with requirements of electrical-power utility company.

D. Meter Sockets:

1. Comply with requirements of electrical-power utility company.
2. Meter Sockets: Steady-state and short-circuit current ratings shall meet indicated circuit ratings.

E. Modular Meter Center: Factory-coordinated assembly of a main service disconnect device, wireways, meter socket modules, and feeder circuit breakers arranged in adjacent vertical sections complete with interconnecting buses.
1. Comply with requirements of utility company for meter center.

a. Comply with UL 67.

2. Housing: NEMA 250, Type 3R enclosure.
3. Meter Socket Rating: Coordinated with connected feeder circuit rating.
4. Minimum Short-Circuit Rating: 65,000 A symmetrical at rated voltage.
5. Steady-state and short-circuit current ratings shall have ratings that match connected circuit ratings.
6. Main Disconnect Device: Circuit breaker, series-combination rated for use with downstream feeder and branch circuit breakers and having an adjustable magnetic trip setting for circuit-breaker frame sizes of 250 A and larger. Comply with requirements in Section 26 2816 "Enclosed Switches and Circuit Breakers." Circuit breakers shall be operable from outside the enclosure to disconnect the unit. Configure cover so it can be opened only when the disconnect switch is open.
7. Feeder Circuit Breakers: Series-combination-rated molded-case units, rated to protect downstream circuit breakers and to house load centers and panelboards that have 10,000-A interrupting capacity.

a. Identification: Complying with requirements in Section 26 0553 "Identification for Electrical Systems."
b. Physical Protection: Tamper resistant, with hasp for padlock.

8. Surge Protection for Main Disconnect: Factory installed, integrally mounted, UL 1449 Type 1. Comply with Section 26 4313 "Surge Protection for Low-Voltage Electrical Power Circuits."

F. Arc-Flash Warning Labels;

1. Labels: Comply with requirements for "Arc-Flash Warning Labels" in Section 26 0574 "Overcurrent Protective Device Arc-Flash Study." Apply a 3-1/2-by-5-inch thermal transfer label of high-adhesion polyester for each work location included in the analysis.

a. The label shall have an orange header with the wording, "WARNING, ARC-FLASH HAZARD," and shall include the following information taken directly from the arc-flash hazard analysis:

1) Location designation.
2) Nominal voltage.
3) Flash protection boundary.
4) Hazard risk category.
5) Incident energy.
6) Working distance.
7) Engineering report number, revision number, and issue date.

2.3 ELECTRICITY METERS

A. System Description: Able to meter designated activity loads, with or without external alarm, control, and communication capabilities, or other optional features.

1. Comply with ANSI C12.1 and ANSI C12.20, 0.2 accuracy class.
2. Ambient Temperature: Minus 22 deg F to plus 158 deg F.
3. Humidity: Zero to 95 percent, noncondensing.

B. General Requirements for Meters:
1. Certify that meters comply with ANSI C12.20 requirements by a laboratory accredited by the National Voluntary Laboratory Accreditation Program (NVLAP) of the National Institute of Standards and Technology (NIST). The laboratory shall use test equipment that is certified annually and is traceable to NIST standards.
2. Enclosure: Supplied by meter manufacturer, NEMA 250, Type 3R minimum, with provisions for locking or sealing.
3. Identification: Comply with requirements in Section 26 0553 "Identification for Electrical Systems."

a. Type: Split core, complying with recommendation of meter manufacturer.

C. kWh Meter: Electronic single-phase and three-phase meters, measuring electricity use.

1. Voltage and Phase Configuration: Meter shall be designed for use on circuits with voltage rating and phase configuration indicated for its application.

D. Current-Transformer Cabinet: Size and configuration as recommended by metering equipment manufacturer for use with indicated connected feeder and sensors.

PART 3 - EXECUTION

3.1 INSTALLATION

A. Comply with equipment installation requirements in NECA 1.

B. Install meters furnished by utility company. Install raceways and equipment according to utility company's written instructions. Provide empty conduits for metering leads and extend grounding connections as required by utility company.

C. Install modular meter center according to switchboard installation requirements in NECA 400.

D. Install arc-flash labels as required by NFPA 70.

E. Wiring Method:

1. Comply with requirements in Section 26 0519 "Low-Voltage Electrical Power Conductors and Cables."
2. Minimum conduit size shall be 1-1/4 inch.

3.2 IDENTIFICATION

A. Comply with requirements for identification specified in Section 26 0553 "Identification for Electrical Systems."

1. Series Combination Warning Label: Self-adhesive labels, with text as required by NFPA 70.
2. Equipment Identification Labels: Self-adhesive labels with clear protective overlay. For residential meters, provide an additional card holder suitable for printed, weather-resistant card with occupant's name.

END OF SECTION

SECTION 26 2726

WIRING DEVICES

PART 1 - GENERAL

1.1 RELATED DOCUMENTS

A. Drawings and general provisions of the Contract, including General and Supplementary Conditions and Division 01 Specification Sections, apply to this Section.

1.2 SUMMARY

A. Section Includes:

1. Straight-blade convenience, hospital-grade, isolated-ground, and tamper-resistant receptacles.
2. USB charger devices.
3. GFCI receptacles.
4. SPD receptacles.
5. Hazardous (classified) location receptacles.
6. Twist-locking receptacles.
7. Pendant cord-connector devices.
8. Cord and plug sets.
9. Toggle switches.
10. Decorator-style convenience.
11. Wall switch sensor light switches with dual technology sensors.
12. Wall switch sensor light switches with passive infrared sensors.
13. Wall switch sensor light switches with ultrasonic sensors.
14. Digital timer light switches.
15. Residential devices.
16. Wall-box dimmers.
17. Wall plates.
18. Floor service outlets.
19. Poke-through assemblies.
20. Prefabricated multioutlet assemblies.
21. Service poles.

1.3 DEFINITIONS

A. Abbreviations of Manufacturers' Names:

1. Cooper: Cooper Wiring Devices; Division of Cooper Industries, Inc.
2. Hubbell: Hubbell Incorporated: Wiring Devices-Kellems.
3. Leviton: Leviton Mfg. Company, Inc.
4. Pass & Seymour: Pass& Seymour/Legrand.

B. BAS: Building automation system.

C. EMI: Electromagnetic interference.

D. GFCI: Ground-fault circuit interrupter.

E. Pigtail: Short lead used to connect a device to a branch-circuit conductor.

F. RFI: Radio-frequency interference.

G. SPD: Surge protective device.

H. UTP: Unshielded twisted pair.

1.4 ACTION SUBMITTALS

A. Product Data: For each type of product.

B. Shop Drawings: List of legends and description of materials and process used for premarking wall plates.

C. Samples: One for each type of device and wall plate specified, in each color specified.

1.5 INFORMATIONAL SUBMITTALS

A. Field quality-control reports.

1.6 CLOSEOUT SUBMITTALS

A. Operation and Maintenance Data: For wiring devices to include in all manufacturers' packing-label warnings and instruction manuals that include labeling conditions.

PART 2 - PRODUCTS

2.1 GENERAL WIRING-DEVICE REQUIREMENTS

A. Wiring Devices, Components, and Accessories: Listed and labeled as defined in NFPA 70, by a qualified testing agency, and marked for intended location and application.

B. Comply with NFPA 70.

C. Devices that are manufactured for use with modular plug-in connectors may be substituted under the following conditions:

1. Connectors shall comply with UL 2459 and shall be made with stranding building wire.
2. Devices shall comply with the requirements in this Section.

D. Devices for Owner-Furnished Equipment:

1. Receptacles: Match plug configurations.
2. Cord and Plug Sets: Match equipment requirements.

E. Source Limitations: Obtain each type of wiring device and associated wall plate from single source from single manufacturer.

2.2 STRAIGHT-BLADE RECEPTACLES

A. Duplex Convenience Receptacles: 125 V, 20 A; comply with NEMA WD 1, NEMA WD 6 Configuration 5-20R, UL 498, and FS W-C-596.

B. Isolated-Ground, Duplex Convenience Receptacles: 125 V, 20 A; comply with NEMA WD 1, NEMA WD 6 Configuration 5-20R, UL 498, and FS W-C-596.
   1. Description: Straight blade; equipment grounding contacts shall be connected only to the green grounding screw terminal of the device and with inherent electrical isolation from mounting strap. Isolation shall be integral to receptacle construction and not dependent on removable parts.

C. Tamper-Resistant Convenience Receptacles: 125 V, 20 A; comply with NEMA WD 1, NEMA WD 6 Configuration 5-20R, UL 498, and FS W-C-596.
   1. Description: Labeled and complying with NFPA 70, "Health Care Facilities" Article, "Pediatric Locations" Section.

2.3 USB CHARGER DEVICES

A. Tamper-Resistant, USB Charger Receptacles: 12 V dc, 2.0 A, USB Type A; comply with NEMA WD 1, NEMA WD 6 Configuration 5-20R, UL 498, UL 1310, and FS W-C-596.
   1. Description: Single-piece, rivetless, nickel-plated, all-brass grounding system. Nickel-plated, brass mounting strap.
   2. USB Receptacles: Quad, Type A.
   3. Line Voltage Receptacles: Dual, two pole, three wire, and self-grounding.

2.4 GFCI RECEPTACLES

A. General Description:

   1. 125 V, 20 A, straight blade, feed-through type, self-test type.
   2. Comply with NEMA WD 1, NEMA WD 6 Configuration 5-20R, UL 498, UL 943 Class A, and FS W-C-596.
   3. Include indicator light that shows when the GFCI has malfunctioned and no longer provides proper GFCI protection.

B. Duplex GFCI Convenience Receptacles:
   1. All 15A and 20A, 125V and 250V non-locking receptacles shall be listed as “Weather Resistant” type in Damp and wet locations.

C. Tamper-Resistant, Duplex GFCI Convenience Receptacles:

2.5 SPD RECEPTACLES

A. General Description: Comply with NEMA WD 1, NEMA WD 6 Configuration 5-20R, UL 498, UL 1449, and FS W-C-596, with integral SPD in line to ground, line to neutral, and neutral to ground.

   1. 125 V, 20 A, straight-blade type.
   2. SPD Components: Multiple metal-oxide varistors; with a nominal clamp-level rating of 400 V and minimum single transient pulse energy dissipation of 240 J, according to IEEE C62.41.2 and IEEE C62.45.

3. Active SPD Indication: Visual and audible, with light visible in face of device to indicate device is "active" or "no longer in service."

B. Duplex SPD Convenience Receptacles:

C. Isolated-Ground, Duplex SPD Convenience Receptacles:
1. Grounding: Equipment grounding contacts shall be connected only to the green grounding screw terminal of the device and with inherent electrical isolation from mounting strap. Isolation shall be integral to receptacle construction and not dependent on removable parts.

2.6 HAZARDOUS (CLASSIFIED) LOCATION RECEPTACLES

A. Hazardous (Classified) Locations Receptacles: Comply with NEMA FB 11 and UL 1010.

2.7 TWIST-LOCKING RECEPTACLES

A. Twist-Lock, Single Convenience Receptacles: 125 V, 20 A; comply with NEMA WD 1, NEMA WD 6 Configuration L5-20R, and UL 498.

B. Twist-Lock, Isolated-Ground, Single Convenience Receptacles: 125 V, 20 A; comply with NEMA WD 1, NEMA WD 6 Configuration L5-20R, and UL 498.
1. Grounding: Equipment grounding contacts shall be connected only to the green grounding screw terminal of the device and with inherent electrical isolation from mounting strap. Isolation shall be integral to receptacle construction and not dependent on removable parts.

2.8 PENDANT CORD-CONNECTOR DEVICES

A. Description:

1. Matching, locking-type plug and receptacle body connector.
2. NEMA WD 6 Configurations L5-20P and L5-20R, heavy-duty grade, and FS W-C-596.
3. Body: Nylon, with screw-open, cable-gripping jaws and provision for attaching external cable grip.
4. External Cable Grip: Woven wire-mesh type made of high-strength, galvanized-steel wire strand, matched to cable diameter, and with attachment provision designed for corresponding connector.

2.9 CORD AND PLUG SETS

A. Description:

1. Match voltage and current ratings and number of conductors to requirements of equipment being connected.
2. Cord: Rubber-insulated, stranded-copper conductors, with Type SOW-A jacket; with green-insulated grounding conductor and ampacity of at least 130 percent of the equipment rating.
3. Plug: Nylon body and integral cable-clamping jaws. Match cord and receptacle type for connection.

2.10 TOGGLE SWITCHES

A. Comply with NEMA WD 1, UL 20, and FS W-S-896.

B. Switches, 120/277 V, 20 A:

C. Key-Operated Switches: 120/277 V, 20 A.
   1. Description: Single pole, with factory-supplied key in lieu of switch handle.

D. Single-Pole, Double-Throw, Momentary-Contact, Center-off Switches: 120/277 V, 20 A; for use with mechanically held lighting contactors.

E. Key-Operated, Single-Pole, Double-Throw, Momentary-Contact, Center-off Switches: 120/277 V, 20 A; for use with mechanically held lighting contactors, with factory-supplied key in lieu of switch handle.

2.11 WALL-BOX DIMMERS

A. Dimmer Switches: Modular, full-wave, solid-state units with integral, quiet on-off switches, with audible frequency and EMI/RFI suppression filters.

B. Control: Continuously adjustable slider; with single-pole or three-way switching. Comply with UL 1472.

C. Incandescent Lamp Dimmers: 120 V; control shall follow square-law dimming curve. On-off switch positions shall bypass dimmer module.

   1. 600 W; dimmers shall require no derating when ganged with other devices. Illuminated when "off."

D. Fluorescent Lamp Dimmer Switches: Modular; compatible with dimmer ballasts; trim potentiometer to adjust low-end dimming; dimmer-ballast combination capable of consistent dimming with low end not greater than 20 percent of full brightness.

E. LED Lamp Dimmer Switches: Modular; compatible with LED lamps; trim potentiometer to adjust low-end dimming; capable of consistent dimming with low end not greater than 20 percent of full brightness.

2.12 WALL PLATES

A. Single and combination types shall match corresponding wiring devices.

   1. Plate-Securing Screws: Metal with head color to match plate finish.
   2. Color determined by architect.
   3. Material for Finished Spaces: 0.035-inch- thick, satin-finished, Type 302 stainless steel.
   4. Material for Unfinished Spaces: Galvanized steel.
   5. Material for Damp Locations: Thermoplastic with spring-loaded lift cover, and listed and labeled for use in wet and damp locations.

B. Wet-Location, Weatherproof Cover Plates: NEMA 250, complying with Type 3R, weather-resistant, die-cast aluminum with lockable cover.

2.13 POKE-THROUGH ASSEMBLIES

A. Description:

1. Factory-fabricated and -wired assembly of below-floor junction box with multichanneled, through-floor raceway/firestop unit and detachable matching floor service-outlet assembly.
2. Comply with UL 514 scrub water exclusion requirements.
3. Service-Outlet Assembly: Flush type with four simplex receptacles and space for four RJ-45 jacks complying with requirements in Division 27 specifications.
4. Size: Selected to fit nominal 4-inch cored holes in floor and matched to floor thickness.
5. Fire Rating: Unit is listed and labeled for fire rating of floor-ceiling assembly.
6. Closure Plug: Arranged to close unused 4-inch cored openings and reestablish fire rating of floor.
7. Wiring Raceways and Compartments: For a minimum of four No. 12 AWG conductors and a minimum of four, four-pair cables that comply with requirements in Division 27 specifications.

2.14 WALL MOUNTED TV LOCATIONS

A. Where wall mounted TVs are indication in the plans provide the following:

1. All-in-one power and AV recessed box similar to Legrand Evolution Series.
2. Box shall include one duplex outlet, one coax cable, and one CAT6 cable.
3. Provide all accessories for a complete finish.
4. Boxes shall have a white finish

2.15 FINISHES

A. Device Color:

1. Wiring Devices Connected to Normal Power System: As selected by Architect unless otherwise indicated or required by NFPA 70 or device listing.
2. Wiring Devices Connected to Emergency Power System: Red.
3. SPD Devices: Blue.
4. Isolated-Ground Receptacles: Orange.

B. Wall Plate Color: For plastic covers, match device color.

PART 3 - EXECUTION

3.1 INSTALLATION

A. Comply with NECA 1, including mounting heights listed in that standard, unless otherwise indicated.

B. Coordination with Other Trades:

1. Protect installed devices and their boxes. Do not place wall finish materials over device boxes and do not cut holes for boxes with routers that are guided by riding against outside of boxes.
2. Keep outlet boxes free of plaster, drywall joint compound, mortar, cement, concrete, dust, paint, and other material that may contaminate the raceway system, conductors, and cables.
3. Install device boxes in brick or block walls so that the cover plate does not cross a joint unless the joint is troweled flush with the face of the wall.
4. Install wiring devices after all wall preparation, including painting, is complete.

C. Conductors:

1. Do not strip insulation from conductors until right before they are spliced or terminated on devices.
2. Strip insulation evenly around the conductor using tools designed for the purpose. Avoid scoring or nicking of solid wire or cutting strands from stranded wire.
3. The length of free conductors at outlets for devices shall meet provisions of NFPA 70, Article 300, without pigtails.
4. Existing Conductors:

    a. Cut back and pigtail, or replace all damaged conductors.
    b. Straighten conductors that remain and remove corrosion and foreign matter.
    c. Pigtailing existing conductors is permitted, provided the outlet box is large enough.

D. Device Installation:

1. Replace devices that have been in temporary use during construction and that were installed before building finishing operations were complete.
2. Keep each wiring device in its package or otherwise protected until it is time to connect conductors.
3. Do not remove surface protection, such as plastic film and smudge covers, until the last possible moment.
4. Connect devices to branch circuits using pigtails that are not less than 6 inches in length.
5. When there is a choice, use side wiring with binding-head screw terminals. Wrap solid conductor tightly clockwise, two-thirds to three-fourths of the way around terminal screw.
6. Use a torque screwdriver when a torque is recommended or required by manufacturer.
7. When conductors larger than No. 12 AWG are installed on 15- or 20-A circuits, splice No. 12 AWG pigtails for device connections.
8. Tighten unused terminal screws on the device.
9. When mounting into metal boxes, remove the fiber or plastic washers used to hold device-mounting screws in yokes, allowing metal-to-metal contact.

E. Receptacle Orientation:

1. Install ground pin of vertically mounted receptacles down, and on horizontally mounted receptacles to the right.

F. Device Plates: Do not use oversized or extra-deep plates. Repair wall finishes and remount outlet boxes when standard device plates do not fit flush or do not cover rough wall opening.

G. Dimmers:

1. Install dimmers within terms of their listing.
2. Verify that dimmers used for fan-speed control are listed for that application.

3. Install unshared neutral conductors on line and load side of dimmers according to manufacturers' device listing conditions in the written instructions.

H. Arrangement of Devices: Unless otherwise indicated, mount flush, with long dimension vertical and with grounding terminal of receptacles on top. Group adjacent switches under single, multigang wall plates.

I. Adjust locations of floor service outlets and service poles to suit arrangement of partitions and furnishings.

3.2 GFCI RECEPTACLES

A. Install non-feed-through-type GFCI receptacles where protection of downstream receptacles is not required.

3.3 IDENTIFICATION

A. Comply with Section 26 0553 "Identification for Electrical Systems."

B. Identify each receptacle with panelboard identification and circuit number. Use hot, stamped, or engraved machine printing with black-filled lettering on face of plate, and durable wire markers or tags inside outlet boxes.

3.4 FIELD QUALITY CONTROL

A. Test Instruments: Use instruments that comply with UL 1436.

B. Test Instrument for Convenience Receptacles: Digital wiring analyzer with digital readout or illuminated digital-display indicators of measurement.

C. Perform the following tests and inspections:

1. In healthcare facilities, prepare reports that comply with recommendations in NFPA 99.
2. Test Instruments: Use instruments that comply with UL 1436.
3. Test Instrument for Convenience Receptacles: Digital wiring analyzer with digital readout or illuminated digital-display indicators of measurement.

D. Tests for Convenience Receptacles:

1. Line Voltage: Acceptable range is 105 to 132 V.
2. Percent Voltage Drop under 15-A Load: A value of 6 percent or higher is unacceptable.
3. Ground Impedance: Values of up to 2 ohms are acceptable.
4. GFCI Trip: Test for tripping values specified in UL 1436 and UL 943.
5. Using the test plug, verify that the device and its outlet box are securely mounted.
6. Tests shall be diagnostic, indicating damaged conductors, high resistance at the circuit breaker, poor connections, inadequate fault current path, defective devices, or similar problems. Correct circuit conditions, remove malfunctioning units and replace with new ones, and retest as specified above.

E. Test straight-blade convenience outlets in patient-care areas for the retention force of the grounding blade according to NFPA 99. Retention force shall be not less than 4 oz..

F. Wiring device will be considered defective if it does not pass tests and inspections.

G. Prepare test and inspection reports.

END OF SECTION

SECTION 26 2816

ENCLOSED SWITCHES AND CIRCUIT BREAKERS

PART 1 - GENERAL

1.1 RELATED DOCUMENTS

A. Drawings and general provisions of the Contract, including General and Supplementary Conditions and other Division 01 Specification Sections, apply to this Section.

1.2 SUMMARY

A. Section Includes:

1. Fusible switches.
2. Nonfusible switches.
3. Receptacle switches.
4. Shunt trip switches.
5. Molded-case circuit breakers (MCCBs).
6. Molded-case switches.
7. Enclosures.

1.3 DEFINITIONS

A. NC: Normally closed.

B. NO: Normally open.

C. SPDT: Single pole, double throw.

1.4 ACTION SUBMITTALS

A. Product Data: For each type of enclosed switch, circuit breaker, accessory, and component indicated. Include nameplate ratings, dimensioned elevations, sections, weights, and manufacturers' technical data on features, performance, electrical characteristics, ratings, accessories, and finishes.

1. Enclosure types and details for types other than NEMA 250, Type 1.
2. Current and voltage ratings.
3. Short-circuit current ratings (interrupting and withstand, as appropriate).
4. Include evidence of a nationally recognized testing laboratory (NRTL) listing for series rating of installed devices.
5. Detail features, characteristics, ratings, and factory settings of individual overcurrent protective devices, accessories, and auxiliary components.
6. Include time-current coordination curves (average melt) for each type and rating of overcurrent protective device; include selectable ranges for each type of overcurrent protective device. Provide in PDF electronic format.

B. Shop Drawings: For enclosed switches and circuit breakers.

1. Include plans, elevations, sections, details, and attachments to other work.
2. Include wiring diagrams for power, signal, and control wiring.

1.5 INFORMATIONAL SUBMITTALS

A. Qualification Data: For qualified testing agency.

B. Seismic Qualification Certificates: For enclosed switches and circuit breakers, accessories, and components, from manufacturer.

1. Basis for Certification: Indicate whether withstand certification is based on actual test of assembled components or on calculation.
2. Dimensioned Outline Drawings of Equipment Unit: Identify center of gravity and locate and describe mounting and anchorage provisions.
3. Detailed description of equipment anchorage devices on which the certification is based and their installation requirements.

C. Field quality-control reports.

1.6 CLOSEOUT SUBMITTALS

A. Operation and Maintenance Data: For enclosed switches and circuit breakers to include in emergency, operation, and maintenance manuals.

1. In addition to items specified in Section 01 7823 "Operation and Maintenance Data," include the following:

a. Manufacturer's written instructions for testing and adjusting enclosed switches and circuit breakers.
b. Time-current coordination curves (average melt) for each type and rating of overcurrent protective device; include selectable ranges for each type of overcurrent protective device. Provide in PDF electronic format.

1.7 MAINTENANCE MATERIAL SUBMITTALS

A. Furnish extra materials that match products installed and that are packaged with protective covering for storage and identified with labels describing contents.

1. Fuses: Equal to 10 percent of quantity installed for each size and type, but no fewer than three of each size and type.
2. Fuse Pullers: Two for each size and type.

1.8 QUALITY ASSURANCE

A. Testing Agency Qualifications: Accredited by NETA.

1. Testing Agency's Field Supervisor: Currently certified by NETA to supervise on-site testing.

1.9 FIELD CONDITIONS

A. Environmental Limitations: Rate equipment for continuous operation under the following conditions unless otherwise indicated:

1. Ambient Temperature: Not less than minus 22 deg F and not exceeding 104 deg F.
2. Altitude: Not exceeding 6600 feet.

1.10 WARRANTY

A. Manufacturer's Warranty: Manufacturer and Installer agree to repair or replace components that fail in materials or workmanship within specified warranty period.

1. Warranty Period: One year(s) from date of Substantial Completion.

PART 2 - PRODUCTS

2.1 PERFORMANCE REQUIREMENTS

A. Seismic Performance: Enclosed switches and circuit breakers shall withstand the effects of earthquake motions determined according to ASCE/SEI 7.

1. The term "withstand" means "the unit will remain in place without separation of any parts from the device when subjected to the seismic forces specified and the unit will be fully operational after the seismic event."

2.2 GENERAL REQUIREMENTS

A. Source Limitations: Obtain enclosed switches and circuit breakers, overcurrent protective devices, components, and accessories, within same product category, from single manufacturer.

B. Product Selection for Restricted Space: Drawings indicate maximum dimensions for enclosed switches and circuit breakers, including clearances between enclosures, and adjacent surfaces and other items. Comply with indicated maximum dimensions.

C. Electrical Components, Devices, and Accessories: Listed and labeled as defined in NFPA 70, by an NRTL, and marked for intended location and application.

D. Comply with NFPA 70.

2.3 FUSIBLE SWITCHES

A. Type HD, Heavy Duty:

1. Single throw.
2. Three pole.
3. 600-V ac.
4. 1200 A and smaller.

5. UL 98 and NEMA KS 1, horsepower rated, with clips or bolt pads to accommodate specified fuses.
6. Lockable handle with capability to accept three padlocks, and interlocked with cover in closed position.

B. Accessories:

1. Equipment Ground Kit: Internally mounted and labeled for copper and aluminum ground conductors.
2. Neutral Kit: Internally mounted; insulated, capable of being grounded and bonded; labeled for copper and aluminum neutral conductors.
3. Isolated Ground Kit: Internally mounted; insulated, labeled for copper and aluminum neutral conductors.
4. Class R Fuse Kit: Provides rejection of other fuse types when Class R fuses are specified.
5. Auxiliary Contact Kit: One NO/NC (Form "C") auxiliary contact(s), arranged to activate before switch blades open. Contact rating - 120-V ac.
6. Hookstick Handle: Allows use of a hookstick to operate the handle.
7. Lugs: Mechanical type, suitable for number, size, and conductor material.
8. Service-Rated Switches: Labeled for use as service equipment.

2.4 NONFUSIBLE SWITCHES

A. Type GD, General Duty, Three Pole, Single Throw, 240-V ac, 600 A and Smaller: UL 98 and NEMA KS 1, horsepower rated, lockable handle with capability to accept two padlocks, and interlocked with cover in closed position.

B. Type HD, Heavy Duty, Three Pole, Single Throw, 600-V ac, 1200 A and Smaller: UL 98 and NEMA KS 1, horsepower rated, lockable handle with capability to accept three padlocks, and interlocked with cover in closed position.

C. Type HD, Heavy Duty, Six Pole, Single Throw, 600-V ac, 200 A and Smaller: UL 98 and NEMA KS 1, horsepower rated, lockable handle with capability to accept three padlocks, and interlocked with cover in closed position.

D. Type HD, Heavy Duty, Three Pole, Double Throw, 600-V ac, 1200 A and Smaller: UL 98 and NEMA KS 1, horsepower rated, lockable handle with capability to accept three padlocks, and interlocked with cover in closed position.

E. Accessories:

1. Equipment Ground Kit: Internally mounted and labeled for copper and aluminum ground conductors.
2. Neutral Kit: Internally mounted; insulated, capable of being grounded and bonded; labeled for copper and aluminum neutral conductors.
3. Isolated Ground Kit: Internally mounted; insulated, labeled for copper and aluminum neutral conductors.
4. Class R Fuse Kit: Provides rejection of other fuse types when Class R fuses are specified.
5. Auxiliary Contact Kit: One NO/NC (Form "C") auxiliary contact(s), arranged to activate before switch blades open. Contact rating - 120-V ac.
6. Hookstick Handle: Allows use of a hookstick to operate the handle.
7. Lugs: Mechanical type, suitable for number, size, and conductor material.
8. Service-Rated Switches: Labeled for use as service equipment.

2.5 RECEPTACLE SWITCHES

A. Type HD, Heavy-Duty, Three Pole, Single-Throw Fusible Switch: 600-V ac, 30A, 60A, or 100 A; UL 98 and NEMA KS 1; horsepower rated, with clips or bolt pads to accommodate specified fuses; lockable handle with capability to accept three padlocks; interlocked with cover in closed position.

B. Interlocking Linkage: Provided between the receptacle and switch mechanism to prevent inserting or removing plug while switch is in the on position, inserting any plug other than specified, and turning switch on if an incorrect plug is inserted or correct plug has not been fully inserted into the receptacle.

C. Receptacle: Polarized, three-phase, four-wire receptacle (fourth wire connected to enclosure ground lug).

D. Accessories:

1. Equipment Ground Kit: Internally mounted and labeled for copper and aluminum ground conductors.
2. Neutral Kit: Internally mounted; insulated, capable of being grounded and bonded; labeled for copper and aluminum neutral conductors.
3. Isolated Ground Kit: Internally mounted; insulated, labeled for copper and aluminum neutral conductors.
4. Class R Fuse Kit: Provides rejection of other fuse types when Class R fuses are specified.
5. Auxiliary Contact Kit: One NO/NC (Form "C") auxiliary contact(s), arranged to activate before switch blades open. Contact rating - 120-V ac.
6. Hookstick Handle: Allows use of a hookstick to operate the handle.
7. Lugs: Mechanical type, suitable for number, size, and conductor material.
8. Service-Rated Switches: Labeled for use as service equipment.

2.6 SHUNT TRIP SWITCHES

A. General Requirements: Comply with ASME A17.1, UL 50, and UL 98, with Class J fuse block and 200-kA interrupting and short-circuit current rating.

B. Type HD, Heavy-Duty, Three Pole, Single-Throw Fusible Switch: 600-V ac, 30A, 60A, 100 A; UL 98 and NEMA KS 1; integral shunt trip mechanism; horsepower rated, with clips or bolt pads to accommodate specified fuses; lockable handle with capability to accept three padlocks; interlocked with cover in closed position.

C. Type HD, Heavy-Duty, Three Pole, Single-Throw Nonfusible Switch: 600-V ac, 30A, 60A, 100 A; UL 98 and NEMA KS 1; integral shunt trip mechanism; horsepower rated, lockable handle with capability to accept three padlocks; interlocked with cover in closed position.

D. Control Circuit: 120-V ac; obtained from integral control power transformer, with primary and secondary fuses, with a control power source of enough capacity to operate shunt trip, pilot, indicating and control devices.

E. Accessories:

1. Oiltight key switch for key-to-test function.
2. Oiltight red ON pilot light.
3. Isolated neutral lug; 200 percent rating.

4. Mechanically interlocked auxiliary contacts that change state when switch is opened and closed.
5. Form C alarm contacts that change state when switch is tripped.
6. Three-pole, double-throw, fire-safety and alarm relay; 120-V ac coil voltage.
7. Three-pole, double-throw, fire-alarm voltage monitoring relay complying with NFPA 72.
8. Neutral Kit: Internally mounted; insulated, capable of being grounded and bonded; labeled for copper and aluminum neutral conductors.
9. Isolated Ground Kit: Internally mounted; insulated, labeled for copper and aluminum neutral conductors.
10. Class R Fuse Kit: Provides rejection of other fuse types when Class R fuses are specified.
11. Auxiliary Contact Kit: One NO/NC (Form "C") auxiliary contact(s), arranged to activate before switch blades open. Contact rating - 120-V ac.
12. Hookstick Handle: Allows use of a hookstick to operate the handle.
13. Lugs: Mechanical type, suitable for number, size, and conductor material.
14. Service-Rated Switches: Labeled for use as service equipment.

2.7 MOLDED-CASE CIRCUIT BREAKERS

A. Circuit breakers shall be constructed using glass-reinforced insulating material. Current carrying components shall be completely isolated from the handle and the accessory mounting area.

B. Circuit breakers shall have a toggle operating mechanism with common tripping of all poles, which provides quick-make, quick-break contact action. The circuit-breaker handle shall be over center, be trip free, and reside in a tripped position between on and off to provide local trip indication. Circuit-breaker escutcheon shall be clearly marked on and off in addition to providing international I/O markings. Equip circuit breaker with a push-to-trip button, located on the face of the circuit breaker to mechanically operate the circuit-breaker tripping mechanism for maintenance and testing purposes.

C. The maximum ampere rating and UL, IEC, or other certification standards with applicable voltage systems and corresponding interrupting ratings shall be clearly marked on face of circuit breaker. Circuit breakers shall be 100 percent rated.

D. MCCBs shall be equipped with a device for locking in the isolated position.

E. Lugs shall be suitable for167 deg F rated wire.

F. Standard: Comply with UL 489 with interrupting capacity to comply with available fault currents.

G. Thermal-Magnetic Circuit Breakers: Inverse time-current thermal element for low-level overloads and instantaneous magnetic trip element for short circuits. Adjustable magnetic trip setting for circuit-breaker frame sizes 250 A and larger.

H. Adjustable, Instantaneous-Trip Circuit Breakers: Magnetic trip element with front-mounted, field-adjustable trip setting.

I. Electronic Trip Circuit Breakers: Field-replaceable rating plug, rms sensing, with the following field-adjustable settings:

1. Instantaneous trip.
2. Long- and short-time pickup levels.
3. Long- and short-time time adjustments.
4. Ground-fault pickup level, time delay, and I-squared t response.

J. Current-Limiting Circuit Breakers: Frame sizes 400 A and smaller, and let-through ratings less than NEMA FU 1, RK-5.

K. Integrally Fused Circuit Breakers: Thermal-magnetic trip element with integral limiter-style fuse listed for use with circuit breaker and trip activation on fuse opening or on opening of fuse compartment door.

L. Ground-Fault Circuit-Interrupter (GFCI) Circuit Breakers: Single- and two-pole configurations with Class A ground-fault protection (6-mA trip).

M. Ground-Fault Equipment-Protection (GFEP) Circuit Breakers: With Class B ground-fault protection (30-mA trip).

N. Features and Accessories:

1. Standard frame sizes, trip ratings, and number of poles.
2. Lugs: Mechanical type, suitable for number, size, trip ratings, and conductor material.
3. Application Listing: Appropriate for application; Type SWD for switching fluorescent lighting loads; Type HID for feeding fluorescent and high-intensity discharge lighting circuits.
4. Ground-Fault Protection: Comply with UL 1053; integrally mounted, self-powered type with mechanical ground-fault indicator; relay with adjustable pickup and time-delay settings, push-to-test feature, internal memory, and shunt trip unit; and three-phase, zero-sequence current transformer/sensor.
5. Communication Capability: Circuit-breaker-mounted Integral communication module with functions and features compatible with power monitoring and control system, specified in Section 26 0913 "Electrical Power Monitoring and Control."
6. Shunt Trip: Trip coil energized from separate circuit, with coil-clearing contact.
7. Undervoltage Trip: Set to operate at 35 to 75 percent of rated voltage without intentional time delay.
8. Auxiliary Contacts: One SPDT switch with "a" and "b" contacts; "a" contacts mimic circuit-breaker contacts, "b" contacts operate in reverse of circuit-breaker contacts.
9. Alarm Switch: One NO contact that operates only when circuit breaker has tripped.
10. Key Interlock Kit: Externally mounted to prohibit circuit-breaker operation; key shall be removable only when circuit breaker is in off position.
11. Electrical Operator: Provide remote control for on, off, and reset operations.
12. Accessory Control Power Voltage: Integrally mounted, self-powered; 120-V ac.

2.8 MOLDED-CASE SWITCHES

A. Description: MCCB with fixed, high-set instantaneous trip only, and short-circuit withstand rating equal to equivalent breaker frame size interrupting rating.

B. Standard: Comply with UL 489 with interrupting capacity to comply with available fault currents.

C. Features and Accessories:

1. Standard frame sizes and number of poles.
2. Lugs:

a. Mechanical type, suitable for number, size, trip ratings, and conductor material.
b. Lugs shall be suitable for 167 deg F rated wire.

3. Ground-Fault Protection: Comply with UL 1053; remote-mounted and powered type with mechanical ground-fault indicator; relay with adjustable pickup and time-delay settings, push-to-test feature, internal memory, and shunt trip unit; and three-phase, zero-sequence current transformer/sensor.
4. Shunt Trip: Trip coil energized from separate circuit, with coil-clearing contact.
5. Undervoltage Trip: Set to operate at 35 to 75 percent of rated voltage without intentional time delay.
6. Auxiliary Contacts: One SPDT switch with "a" and "b" contacts; "a" contacts mimic switch contacts, "b" contacts operate in reverse of switch contacts.
7. Alarm Switch: One NO contact that operates only when switch has tripped.
8. Key Interlock Kit: Externally mounted to prohibit switch operation; key shall be removable only when switch is in off position.
9. Zone-Selective Interlocking: Integral with ground-fault shunt trip unit; for interlocking ground-fault protection function.
10. Electrical Operator: Provide remote control for on, off, and reset operations.
11. Accessory Control Power Voltage: Integrally mounted, self-powered; 120-V ac.

2.9 ENCLOSURES

A. Enclosed Switches and Circuit Breakers: UL 489, NEMA KS 1, NEMA 250, and UL 50, to comply with environmental conditions at installed location.

B. Enclosure Finish: The enclosure shall be finished with gray baked enamel paint, electrodeposited on cleaned, phosphatized steel (NEMA 250 Type 1).

C. Conduit Entry: NEMA 250 Types 4, 4X, and 12 enclosures shall contain no knockouts. NEMA 250 Types 7 and 9 enclosures shall be provided with threaded conduit openings in both endwalls.

D. Operating Mechanism: The circuit-breaker operating handle shall be externally operable with the operating mechanism being an integral part of the box, not the cover. The cover interlock mechanism shall have an externally operated override. The override shall not permanently disable the interlock mechanism, which shall return to the locked position once the override is released. The tool used to override the cover interlock mechanism shall not be required to enter the enclosure in order to override the interlock.

E. Enclosures designated as NEMA 250 Type 4, 4X stainless steel, 12, or 12K shall have a dual cover interlock mechanism to prevent unintentional opening of the enclosure cover when the circuit breaker is ON and to prevent turning the circuit breaker ON when the enclosure cover is open.

F. NEMA 250 Type 7/9 enclosures shall be furnished with a breather and drain kit to allow their use in outdoor and wet location applications.

PART 3 - EXECUTION

3.1 EXAMINATION

A. Examine elements and surfaces to receive enclosed switches and circuit breakers for compliance with installation tolerances and other conditions affecting performance of the Work.

B. Proceed with installation only after unsatisfactory conditions have been corrected.

1. Commencement of work shall indicate Installer's acceptance of the areas and conditions as satisfactory.

3.2 PREPARATION

A. Interruption of Existing Electric Service: Do not interrupt electric service to facilities occupied by Owner or others unless permitted under the following conditions and then only after arranging to provide temporary electric service according to requirements indicated:

1. Notify Architect no fewer than seven days in advance of proposed interruption of electric service.
2. Indicate method of providing temporary electric service.
3. Do not proceed with interruption of electric service without Owner's written permission.
4. Comply with NFPA 70E.

3.3 ENCLOSURE ENVIRONMENTAL RATING APPLICATIONS

A. Enclosed Switches and Circuit Breakers: Provide enclosures at installed locations with the following environmental ratings.

1. Indoor, Dry and Clean Locations: NEMA 250, Type 1.
2. Outdoor Locations: NEMA 250, Type 3R.
3. Kitchen and Wash-Down Areas: NEMA 250, Type 4X, stainless steel.
4. Other Wet or Damp, Indoor Locations: NEMA 250, Type 4.
5. Indoor Locations Subject to Dust, Falling Dirt, and Dripping Noncorrosive Liquids: NEMA 250, Type 12.
6. Hazardous Areas Indicated on Drawings: NEMA 250, Type 7 with cover attached by Type 316 stainless steel bolts.

3.4 INSTALLATION

A. Coordinate layout and installation of switches, circuit breakers, and components with equipment served and adjacent surfaces. Maintain required workspace clearances and required clearances for equipment access doors and panels.

B. Install individual wall-mounted switches and circuit breakers with tops at uniform height unless otherwise indicated.

C. Comply with mounting and anchoring requirements specified in Section 26 0548.16 "Seismic Controls for Electrical Systems."

D. Temporary Lifting Provisions: Remove temporary lifting of eyes, channels, and brackets and temporary blocking of moving parts from enclosures and components.

E. Install fuses in fusible devices.

F. Comply with NFPA 70 and NECA 1.

3.5 IDENTIFICATION

A. Comply with requirements in Section 26 0553 "Identification for Electrical Systems."

1. Identify field-installed conductors, interconnecting wiring, and components; provide warning signs.
2. Label each enclosure with engraved metal or laminated-plastic nameplate.

3.6 FIELD QUALITY CONTROL

A. Testing Agency: Engage a qualified testing agency to perform tests and inspections.

B. Perform tests and inspections.

C. Tests and Inspections for Switches:

1. Visual and Mechanical Inspection:

a. Inspect physical and mechanical condition.
b. Inspect anchorage, alignment, grounding, and clearances.
c. Verify that the unit is clean.
d. Verify blade alignment, blade penetration, travel stops, and mechanical operation.
e. Verify that fuse sizes and types match the Specifications and Drawings.
f. Verify that each fuse has adequate mechanical support and contact integrity.
g. Inspect bolted electrical connections for high resistance using one of the two following methods:

1) Use a low-resistance ohmmeter.

a) Compare bolted connection resistance values to values of similar connections. Investigate values that deviate from those of similar bolted connections by more than 50 percent of the lowest value.

2) Verify tightness of accessible bolted electrical connections by calibrated torque-wrench method in accordance with manufacturer's published data or NETA ATS Table 100.12.

a) Bolt-torque levels shall be in accordance with manufacturer's published data. In the absence of manufacturer's published data, use NETA ATS Table 100.12.

h. Verify that operation and sequencing of interlocking systems is as described in the Specifications and shown on the Drawings.
i. Verify correct phase barrier installation.
j. Verify lubrication of moving current-carrying parts and moving and sliding surfaces.

2. Electrical Tests:

a. Perform resistance measurements through bolted connections with a low-resistance ohmmeter. Compare bolted connection resistance values to values of similar connections. Investigate values that deviate from adjacent poles or similar switches by more than 50 percent of the lowest value.
b. Measure contact resistance across each switchblade fuseholder. Drop values shall not exceed the high level of the manufacturer's published data. If manufacturer's published data are not available, investigate values that deviate from adjacent poles or similar switches by more than 50 percent of the lowest value.
c. Perform insulation-resistance tests for one minute on each pole, phase-to-phase and phase-to-ground with switch closed, and across each open pole. Apply voltage

in accordance with manufacturer's published data. In the absence of manufacturer's published data, use Table 100.1 from the NETA ATS. Investigate values of insulation resistance less than those published in Table 100.1 or as recommended in manufacturer's published data.

d. Measure fuse resistance. Investigate fuse-resistance values that deviate from each other by more than 15 percent.

e. Perform ground fault test according to NETA ATS 7.14 "Ground Fault Protection Systems, Low-Voltage."

D. Tests and Inspections for Molded Case Circuit Breakers:

1. Visual and Mechanical Inspection:

a. Verify that equipment nameplate data are as described in the Specifications and shown on the Drawings.

b. Inspect physical and mechanical condition.

c. Inspect anchorage, alignment, grounding, and clearances.

d. Verify that the unit is clean.

e. Operate the circuit breaker to ensure smooth operation.

f. Inspect bolted electrical connections for high resistance using one of the two following methods:

1) Use a low-resistance ohmmeter.

a) Compare bolted connection resistance values to values of similar connections. Investigate values that deviate from those of similar bolted connections by more than 50 percent of the lowest value.

2) Verify tightness of accessible bolted electrical connections by calibrated torque-wrench method in accordance with manufacturer's published data or NETA ATS Table 100.12.

a) Bolt-torque levels shall be in accordance with manufacturer's published data. In the absence of manufacturer's published data, use NETA ATS Table 100.12.

g. Inspect operating mechanism, contacts, and chutes in unsealed units.

h. Perform adjustments for final protective device settings in accordance with the coordination study.

2. Electrical Tests:

a. Perform resistance measurements through bolted connections with a low-resistance ohmmeter. Compare bolted connection resistance values to values of similar connections. Investigate values that deviate from adjacent poles or similar switches by more than 50 percent of the lowest value.

b. Perform insulation-resistance tests for one minute on each pole, phase-to-phase and phase-to-ground with circuit breaker closed, and across each open pole. Apply voltage in accordance with manufacturer's published data. In the absence of manufacturer's published data, use Table 100.1 from the NETA ATS. Investigate values of insulation resistance less than those published in Table 100.1 or as recommended in manufacturer's published data.

c. Perform a contact/pole resistance test. Drop values shall not exceed the high level of the manufacturer's published data. If manufacturer's published data are not

available, investigate values that deviate from adjacent poles or similar switches by more than 50 percent of the lowest value.

d. Perform insulation resistance tests on all control wiring with respect to ground. Applied potential shall be 500-V dc for 300-V rated cable and 1000-V dc for 600-V rated cable. Test duration shall be one minute. For units with solid state components, follow manufacturer's recommendation. Insulation resistance values shall be no less than two megohms.

e. Determine the following by primary current injection:

1) Long-time pickup and delay. Pickup values shall be as specified. Trip characteristics shall not exceed manufacturer's published time-current characteristic tolerance band, including adjustment factors.
2) Short-time pickup and delay. Short-time pickup values shall be as specified. Trip characteristics shall not exceed manufacturer's published time-current characteristic tolerance band, including adjustment factors.
3) Ground-fault pickup and time delay. Ground-fault pickup values shall be as specified. Trip characteristics shall not exceed manufacturer's published time-current characteristic tolerance band, including adjustment factors.
4) Instantaneous pickup. Instantaneous pickup values shall be as specified and within manufacturer's published tolerances.

f. Test functionality of the trip unit by means of primary current injection. Pickup values and trip characteristics shall be as specified and within manufacturer's published tolerances.

g. Perform minimum pickup voltage tests on shunt trip and close coils in accordance with manufacturer's published data. Minimum pickup voltage of the shunt trip and close coils shall be as indicated by manufacturer.

h. Verify correct operation of auxiliary features such as trip and pickup indicators; zone interlocking; electrical close and trip operation; trip-free, anti-pump function; and trip unit battery condition. Reset all trip logs and indicators. Investigate units that do not function as designed.

i. Verify operation of charging mechanism. Investigate units that do not function as designed.

3. Correct malfunctioning units on-site, where possible, and retest to demonstrate compliance; otherwise, replace with new units and retest.

4. Perform the following infrared scan tests and inspections and prepare reports:

a. Initial Infrared Scanning: After Substantial Completion, but not more than 60 days after Final Acceptance, perform an infrared scan of each enclosed switch and circuit breaker. Remove front panels so joints and connections are accessible to portable scanner.

b. Follow-up Infrared Scanning: Perform an additional follow-up infrared scan of each enclosed switch and circuit breaker 11 months after date of Substantial Completion.

c. Instruments and Equipment: Use an infrared scanning device designed to measure temperature or to detect significant deviations from normal values. Provide calibration record for device.

5. Test and adjust controls, remote monitoring, and safeties. Replace damaged and malfunctioning controls and equipment.

E. Enclosed switches and circuit breakers will be considered defective if they do not pass tests and inspections.

F. Prepare test and inspection reports.

1. Test procedures used.
2. Include identification of each enclosed switch and circuit breaker tested and describe test results.
3. List deficiencies detected, remedial action taken, and observations after remedial action.

3.7 ADJUSTING

A. Adjust moving parts and operable components to function smoothly, and lubricate as recommended by manufacturer.

B. Set field-adjustable circuit-breaker trip ranges as specified in Section 26 0573 "Overcurrent Protective Device Coordination Study."

END OF SECTION

SECTION 23 0514

VARIABLE-FREQUENCY MOTOR CONTROLLERS

PART 1 - GENERAL

1.1 RELATED DOCUMENTS

A. Drawings and general provisions of the Contract, including General and Supplementary Conditions and Division 01 Specification Sections, apply to this Section.

1.2 SUMMARY

A. Section includes separately enclosed, preassembled, combination VFCs, rated 600 V and less, for speed control of three-phase, squirrel-cage induction motors.

1.3 DEFINITIONS

A. BAS: Building automation system.

B. CE: Conformite Europeene (European Compliance).

C. CPT: Control power transformer.

D. EMI: Electromagnetic interference.

E. LED: Light-emitting diode.

F. NC: Normally closed.

G. NO: Normally open.

H. OCPD: Overcurrent protective device.

I. PID: Control action, proportional plus integral plus derivative.

J. RFI: Radio-frequency interference.

K. VFC: Variable-frequency motor controller.

1.4 ACTION SUBMITTALS

A. Product Data: For each type and rating of VFC indicated.
   1. Include dimensions and finishes for VFCs.
   2. Include rated capacities, operating characteristics, electrical characteristics, and furnished specialties and accessories.

B. Shop Drawings: For each VFC indicated.
   1. Include mounting and attachment details.
   2. Include details of equipment assemblies. Indicate dimensions, weights, loads, required clearances, method of field assembly, components, and location and size of each field connection.

3. Include diagrams for power, signal, and control wiring.

1.5 INFORMATIONAL SUBMITTALS

A. Coordination Drawings: Floor plans, drawn to scale, showing dimensioned layout on which the following items are shown and coordinated with each other, using input from installers of the items involved:
   1. Required working clearances and required area above and around VFCs.
   2. Show VFC layout and relationships between electrical components and adjacent structural and mechanical elements.
   3. Show support locations, type of support, and weight on each support.
   4. Indicate field measurements.

B. Qualification Data: For testing agency.

C. Product Certificates: For each VFC from manufacturer.

A. Harmonic Analysis Report: Provide manufacturer's statement of compliance with IEEE 519 and manufacturer's harmonic analysis study and report based upon conditions as described in Section 26 0573 and 260574. These conditions include but are not limited to the POCC, harmonic limits, normal power / emergency power modes, cable length, and transformer / generator data.

B. Source quality-control reports.

C. Field quality-control reports.

D. Sample Warranty: For special warranty.

1.6 CLOSEOUT SUBMITTALS

A. Operation and Maintenance Data: For VFCs to include in emergency, operation, and maintenance manuals.
   1. In addition to items specified in Section 01 7823 "Operation and Maintenance Data," include the following:

      a. Manufacturer's written instructions for testing and adjusting thermal-magnetic circuit breaker and motor-circuit protector trip settings.
      b. Manufacturer's written instructions for setting field-adjustable overload relays.
      c. Manufacturer's written instructions for testing, adjusting, and reprogramming microprocessor control modules.
      d. Manufacturer's written instructions for setting field-adjustable timers, controls, and status and alarm points.
      e. Load-Current and Overload-Relay Heater List: Compile after motors have been installed, and arrange to demonstrate that selection of heaters suits actual motor nameplate, full-load currents.
      f. Load-Current and List of Settings of Adjustable Overload Relays: Compile after motors have been installed, and arrange to demonstrate that switch settings for motor-running overload protection suit actual motors to be protected.

1.7 QUALITY ASSURANCE

A. Testing Agency Qualifications: Member company of NETA or an NRTL.
   1. Testing Agency's Field Supervisor: Currently certified by NETA to supervise on-site testing.

1.8 DELIVERY, STORAGE, AND HANDLING

A. If stored in space that is not permanently enclosed and air conditioned, remove loose packing and flammable materials from inside controllers and install temporary electric heating, with at least 250 W per controller.

B. Product Selection for Restricted Space: Drawings indicate maximum dimensions for VFCs, including clearances between VFCs, and adjacent surfaces and other items.

1.9 WARRANTY

A. Special Warranty: Manufacturer agrees to repair or replace VFCs that fail in materials or workmanship within specified warranty period.
   1. Warranty Period: Five years from date of Substantial Completion.

PART 2 - PRODUCTS

2.1 MANUFACTURERS

A. Basis-of-Design Product: Subject to compliance with requirements, provide product indicated on Drawings or comparable product by one of the following:
   1. ABB Inc.
   2. Danfoss Inc; Danfoss Drives Div.
   3. Eaton Electrical Sector; Eaton Corporation; Cutler-Hammer Business Unit.
   4. Fuji Electric.
   5. Siemens Energy & Automation, Inc.
   6. Yaskawa Electric America, Inc.
   7. Trane
   8. Emerson

2.2 SYSTEM DESCRIPTION

A. General Requirements for VFCs:
   1. VFCs and Accessories: Listed and labeled as defined in NFPA 70, by a qualified testing agency, and marked for intended location and application.
   2. Comply with NEMA ICS 7, NEMA ICS 61800-2, and UL 508C.

B. Application: Constant torque and variable torque.

C. VFC Description: Variable-frequency motor controller, consisting of power converter that employs pulse-width-modulated inverter, factory built and tested in an enclosure, with integral disconnecting means and overcurrent and overload protection; listed and labeled by an NRTL as a complete unit; arranged to provide self-protection, protection, and variable-speed control of one or more three-phase induction motors by adjusting output voltage and frequency.
   1. Units suitable for operation of NEMA MG 1, Design A and Design B motors, as defined by NEMA MG 1, Section IV, Part 30, "Application Considerations for Constant Speed Motors Used on a Sinusoidal Bus with Harmonic Content and General Purpose Motors Used with Adjustable-Voltage or Adjustable-Frequency Controls or Both."
   2. Units suitable for operation of inverter-duty motors as defined by NEMA MG 1, Section IV, Part 31, "Definite-Purpose Inverter-Fed Polyphase Motors."
   3. Listed and labeled for integrated short-circuit current (withstand) rating by an NRTL acceptable to authorities having jurisdiction.

D. Design and Rating: Match load type, such as fans, blowers, and pumps; and type of connection used between motor and load such as direct or through a power-transmission connection.

E. Output Rating: Three phase; 10 to 60 Hz, with voltage proportional to frequency throughout voltage range; maximum voltage equals input voltage.

F. Unit Operating Requirements:
1. Input AC Voltage Tolerance: Plus 10 and minus 10 percent of VFC input voltage rating.
2. Input AC Voltage Unbalance: Not exceeding 5 percent.
3. Input Frequency Tolerance: Plus or minus 3 percent of VFC frequency rating.
4. Minimum Efficiency: 96 percent at 60 Hz, full load.
5. Minimum Displacement Primary-Side Power Factor: 96 percent under any load or speed condition.
6. Ambient Temperature Rating: Not less than 32 deg F and not exceeding 104 deg F.
7. Humidity Rating: Less than 95 percent (noncondensing).
8. Altitude Rating: Not exceeding 3300 feet.
9. Vibration Withstand: Comply with NEMA ICS 61800-2.
10. Overload Capability: 1.1 times the base load current for 60 seconds; minimum of 1.8 times the base load current for three seconds.
11. Starting Torque: Minimum 100 percent of rated torque from 3 to 60 Hz.
12. Speed Regulation: Plus or minus 5 percent.
13. Output Carrier Frequency: Selectable; 0.5 to 15 kHz.
14. Stop Modes: Programmable; includes fast, free-wheel, and dc injection braking.

G. Inverter Logic: Microprocessor based, 32 bit, isolated from all power circuits.

H. Isolated Control Interface: Allows VFCs to follow remote-control signal over a minimum 40:1 speed range.
1. Signal: Electrical.

I. Internal Adjustability Capabilities:
1. Minimum Speed: 5 to 25 percent of maximum rpm.
2. Maximum Speed: 80 to 100 percent of maximum rpm.
3. Acceleration: 0.1 to 999.9 seconds.
4. Deceleration: 0.1 to 999.9 seconds.
5. Current Limit: 30 to minimum of 150 percent of maximum rating.

J. Self-Protection and Reliability Features:
1. Surge Suppression: Factory installed as an integral part of the VFC, complying with UL 1449 SPD, Type 1 or Type 2.
2. Loss of Input Signal Protection: Selectable response strategy, including speed default to a percent of the most recent speed, a preset speed, or stop; with alarm.
3. Under- and overvoltage trips.
4. Inverter overcurrent trips.
5. VFC and Motor-Overload/Overtemperature Protection: Microprocessor-based thermal protection system for monitoring VFCs and motor thermal characteristics, and for providing VFC overtemperature and motor-overload alarm and trip; settings selectable via the keypad.
6. Critical frequency rejection, with three selectable, adjustable deadbands.
7. Instantaneous line-to-line and line-to-ground overcurrent trips.
8. Loss-of-phase protection.
9. Reverse-phase protection.
10. Short-circuit protection.
11. Motor-overtemperature fault.

K. Automatic Reset/Restart: Attempt three restarts after drive fault or on return of power after an interruption and before shutting down for manual reset or fault correction; adjustable delay time between restart attempts.

L. Bidirectional Autospeed Search: Capable of starting VFC into rotating loads spinning in either direction and returning motor to set speed in proper direction, without causing damage to drive, motor, or load.

M. Torque Boost: Automatically varies starting and continuous torque to at least 1.5 times the minimum torque to ensure high-starting torque and increased torque at slow speeds.

N. Motor Temperature Compensation at Slow Speeds: Adjustable current fall-back based on output frequency for temperature protection of self-cooled, fan-ventilated motors at slow speeds.

O. Integral Input Disconnecting Means and OCPD: UL 489, molded-case switch, with power fuse block and current-limiting fuses or NEMA KS 1, nonfusible switch, with power fuse block and current-limiting fuses with pad-lockable, door-mounted handle mechanism.
   1. Disconnect Rating: Not less than 115 percent of NFPA 70 motor full-load current rating or VFC input current rating, whichever is larger.
   2. Auxiliary Contacts: NO or NC, arranged to activate before switch blades open.

2.3 CONTROLS AND INDICATION

A. Panel-Mounted Operator Station: Manufacturer's standard front-accessible, sealed keypad and plain-English-language digital display; allows complete programming, program copying, operating, monitoring, and diagnostic capability.
   1. Keypad: In addition to required programming and control keys, include keys for HAND, OFF, and AUTO modes.
   2. Security Access: Provide electronic security access to controls through identification and password with at least three levels of access: View only; view and operate; and view, operate, and service.

      a. Control Authority: Supports at least four conditions: Off, local manual control at VFC, local automatic control at VFC, and automatic control through a remote source.

B. Historical Logging Information and Displays:
   1. Real-time clock with current time and date.
   2. Running log of total power versus time.
   3. Total run time.
   4. Fault log, maintaining last four faults with time and date stamp for each.

C. Indicating Devices: Digital display and additional readout devices as required, mounted flush in VFC door and connected to display VFC parameters including, but not limited to:
   1. Output frequency (Hz).
   2. Motor speed (rpm).
   3. Motor status (running, stop, fault).
   4. Motor current (amperes).
   5. Motor torque (percent).
   6. Fault or alarming status (code).
   7. PID feedback signal (percent).
   8. DC-link voltage (V dc).
   9. Set point frequency (Hz).
   10. Motor output voltage (V ac).

D. Control Signal Interfaces:
   1. Electric Input Signal Interface:

a. A minimum of two programmable analog inputs: 0- to 10-V dc, 4- to 20-mA dc, or operator-selectable "x"- to "y"-mA dc.
b. A minimum of six multifunction programmable digital inputs.

2. Remote Signal Inputs: Capability to accept any of the following speed-setting input signals from the BAS or other control systems:

a. 0- to 10-V dc.
b. 4- to 20-mA dc.
c. Potentiometer using up/down digital inputs.
d. Fixed frequencies using digital inputs.

3. Output Signal Interface: A minimum of one programmable analog output signal(s) (4- to 20-mA dc), which can be configured for any of the following:

a. Output frequency (Hz).
b. Output current (load).
c. DC-link voltage (V dc).
d. Motor torque (percent).
e. Motor speed (rpm).
f. Set point frequency (Hz).

4. Remote Indication Interface: A minimum of two programmable dry-circuit relay outputs (120-V ac, 1 A) for remote indication of the following:

a. Motor running.
b. Set point speed reached.
c. Fault and warning indication (overtemperature or overcurrent).
d. PID high- or low-speed limits reached.

E. BAS Interface: Factory-installed hardware and software shall interface with BAS to monitor, control, display, and record data for use in processing reports. VFC settings shall be retained within VFC's nonvolatile memory.

1. Communication Interface: Comply with ASHRAE 135. Communication shall interface with BAS to remotely control and monitor lighting from a BAS operator workstation. Control features and monitoring points displayed locally at lighting panel shall be available through the BAS.

2.4 LINE CONDITIONING AND FILTERING

A. Input Line Conditioning: Based on the manufacturer's harmonic analysis study and report, provide input filtering, as required, to limit total demand (harmonic current) distortion and total harmonic voltage demand at the defined point of common coupling to meet IEEE 519 recommendations.

B. The VFD shall have internal 5% equivalent impedance to reduce the harmonics to the power line and to add protection from AC line transients. The 5% impedance may be from dual (positive and negative DC bus) reactors, or 5% AC line reactors. VFD’s with only one DC reactor shall add an AC line reactor.

C. Output Filtering: Verify voltage does not exceed motor pulse withstand capability.

2.5 BYPASS SYSTEMS

A. Bypass Operation: Safely transfers motor between power converter output and bypass circuit, manually, automatically, or both. Selector switches set modes and indicator lights indicate mode selected. Unit is capable of stable operation (starting, stopping, and running) with motor completely disconnected from power converter.

B. Bypass Mode: Manual operation only; requires local operator selection at VFC. Transfer between power converter and bypass contactor, and retransfer shall only be allowed with the motor at zero speed.

2.6 OPTIONAL FEATURES

A. Sleep Function: Senses a minimal deviation of a feedback signal and stops the motor. On an increase in speed-command signal deviation, VFC resumes normal operation.

B. Motor Preheat Function: Preheats motor when idle to prevent moisture accumulation in the motor.

C. Remote digital operator kit.

D. Communication Port: RS-232 port, USB 2.0 port, or equivalent connection capable of connecting a printer and a notebook computer.

2.7 ENCLOSURES

A. VFC Enclosures: NEMA 250, to comply with environmental conditions at installed location.

B. Plenum Rating: UL 1995; NRTL certification label on enclosure, clearly identifying VFC as "Plenum Rated."

2.8 ACCESSORIES

A. General Requirements for Control-Circuit and Pilot Devices: NEMA ICS 5; factory installed in VFC enclosure cover unless otherwise indicated.
   1. Push Buttons: Covered.
   2. Pilot Lights: Push to test.
   3. Selector Switches: Rotary type.

B. Control Relays: Auxiliary and adjustable solid-state time-delay relays.

C. Phase-Failure, Phase-Reversal, and Undervoltage and Overvoltage Relays: Solid-state sensing circuit with isolated output contacts for hard-wired connections. Provide adjustable undervoltage, overvoltage, and time-delay settings.
   1. Current Transformers: Continuous current rating, basic impulse insulating level (BIL) rating, burden, and accuracy class suitable for connected circuitry. Comply with IEEE C57.13.

D. Supplemental Digital Meters:
   1. Elapsed-time meter.
   2. Kilowatt meter.
   3. Kilowatt-hour meter.

E. Breather and drain assemblies, to maintain interior pressure and release condensation in NEMA 250, Type 4 and Type 4X enclosures installed outdoors or in unconditioned interior spaces subject to humidity and temperature swings.

F. Space heaters, with NC auxiliary contacts, to mitigate condensation in NEMA 250, Type 3R and Type 4X enclosures installed outdoors or in unconditioned interior spaces subject to humidity and temperature swings.

G. Cooling Fan and Exhaust System: For NEMA 250, Type 1; UL 508 component recognized: Supply fan, with composite intake and exhaust grills; 120-V ac; obtained from integral CPT.

H. Sun shields installed on fronts, sides, and tops of enclosures installed outdoors and subject to direct and extended sun exposure.

2.9 SOURCE QUALITY CONTROL

A. Testing: Test and inspect VFCs according to requirements in NEMA ICS 61800-2.
   1. Test each VFC while connected to a motor that is comparable to that for which the VFC is rated.
   2. Verification of Performance: Rate VFCs according to operation of functions and features specified.

B. VFCs will be considered defective if they do not pass tests and inspections.

C. Prepare test and inspection reports.

PART 3 - EXECUTION

3.1 EXAMINATION

A. Examine areas, surfaces, and substrates to receive VFCs, with Installer present, for compliance with requirements for installation tolerances, and other conditions affecting performance of the Work.

B. Examine VFC before installation. Reject VFCs that are wet, moisture damaged, or mold damaged.

C. Examine roughing-in for conduit systems to verify actual locations of conduit connections before VFC installation.

D. Prepare written report, endorsed by Installer, listing conditions detrimental to performance of the Work

E. Proceed with installation only after unsatisfactory conditions have been corrected.

3.2 INSTALLATION

A. Wall-Mounting Controllers: Install with tops at uniform height and with disconnect operating handles not higher than 79 inches above finished floor, unless otherwise indicated, and by bolting units to wall or mounting on lightweight structural-steel channels bolted to wall. For controllers not on walls, provide freestanding racks complying with Section 26 0529 "Hangers and Supports for Electrical Systems."

B. Floor-Mounting Controllers: Install VFCs on 4-inch nominal thickness concrete base. Comply with requirements for concrete base specified in Section 03 3000 "Cast-in-Place Concrete."
   1. Install dowel rods to connect concrete base to concrete floor. Unless otherwise indicated, install dowel rods on 18-inch centers around the full perimeter of concrete base.
   2. For supported equipment, install epoxy-coated anchor bolts that extend through concrete base and anchor into structural concrete floor.
   3. Place and secure anchorage devices. Use setting drawings, templates, diagrams, instructions, and directions furnished with items to be embedded.
   4. Install anchor bolts to elevations required for proper attachment to supported equipment.

C. Temporary Lifting Provisions: Remove temporary lifting eyes, channels, and brackets and temporary blocking of moving parts from enclosures and components.

D. Install fuses in each fusible-switch VFC.

E. Install fuses in control circuits if not factory installed. Comply with requirements in Section 26 2813 "Fuses."

F. Install heaters in thermal-overload relays. Select heaters based on actual nameplate full-load amperes after motors are installed.

G. Install, connect, and fuse thermal-protector monitoring relays furnished with motor-driven equipment.

H. Comply with NECA 1.

I. Utilize metal type of conduit (refer to division 26) for line, load and control wiring. Do not mix line, load, and control wiring in the same conduit.

3.3 CONTROL WIRING INSTALLATION

A. Install wiring between VFCs and remote devices and facility's central-control system. Comply with requirements in Section 26 0519 "Low Voltage Electrical Power Conductors and Cables."

B. Bundle, train, and support wiring in enclosures.

C. Connect selector switches and other automatic-control devices where applicable.
   1. Connect selector switches to bypass only those manual- and automatic-control devices that have no safety functions when switches are in manual-control position.
   2. Connect selector switches with control circuit in both manual and automatic positions for safety-type control devices such as low- and high-pressure cutouts, high-temperature cutouts, and motor-overload protectors.

3.4 IDENTIFICATION

A. Identify VFCs, components, and control wiring. Comply with requirements for identification specified in Section 26 0553 "Identification for Electrical Systems."
   1. Identify field-installed conductors, interconnecting wiring, and components; provide warning signs.
   2. Label each VFC with engraved nameplate.
   3. Label each enclosure-mounted control and pilot device.

B. Operating Instructions: Frame printed operating instructions for VFCs, including control sequences and emergency procedures. Fabricate frame of finished metal, and cover instructions with clear acrylic plastic. Mount on front of VFC units.

3.5 FIELD QUALITY CONTROL

A. Manufacturer's Field Service: Engage a factory-authorized service representative to test and inspect components, assemblies, and equipment installations, including connections.

B. Acceptance Testing Preparation:
   1. Test insulation resistance for each VFC element, bus, component, connecting supply, feeder, and control circuit.
   2. Test continuity of each circuit.

C. Tests and Inspections:
   1. Inspect VFC, wiring, components, connections, and equipment installation. Test and adjust controllers, components, and equipment.

2. Test insulation resistance for each VFC element, component, connecting motor supply, feeder, and control circuits.
3. Test continuity of each circuit.
4. Verify that voltages at VFC locations are within 10 percent of motor nameplate rated voltages. If outside this range for any motor, notify Architect before starting the motor(s).
5. Test each motor for proper phase rotation.
6. Perform tests according to the Inspection and Test Procedures for Adjustable Speed Drives stated in NETA Acceptance Testing Specification. Certify compliance with test parameters.
7. Correct malfunctioning units on-site, where possible, and retest to demonstrate compliance; otherwise, replace with new units and retest.
8. Test and adjust controls, remote monitoring, and safeties. Replace damaged and malfunctioning controls and equipment.

D. VFCs will be considered defective if they do not pass tests and inspections.

E. Prepare test and inspection reports, including a certified report that identifies the VFC and describes scanning results. Include notation of deficiencies detected, remedial action taken, and observations made after remedial action.

3.6 STARTUP SERVICE

A. Engage a factory-authorized service representative to perform startup service.
1. Complete installation and startup checks according to manufacturer's written instructions.

3.7 ADJUSTING

A. Program microprocessors for required operational sequences, status indications, alarms, event recording, and display features. Clear events memory after final acceptance testing and prior to Substantial Completion.

B. Set field-adjustable switches, auxiliary relays, time-delay relays, timers, and overload-relay pickup and trip ranges.

C. Adjust the trip settings of instantaneous-only circuit breakers and thermal-magnetic circuit breakers with adjustable, instantaneous trip elements. Initially adjust to 6 times the motor nameplate full-load amperes and attempt to start motors several times, allowing for motor cool-down between starts. If tripping occurs on motor inrush, adjust settings in increments until motors start without tripping. Do not exceed 8 times the motor full-load amperes (or 11 times for NEMA Premium Efficient motors if required). Where these maximum settings do not allow starting of a motor, notify Architect before increasing settings.

D. Set the taps on reduced-voltage autotransformer controllers.

E. Set field-adjustable circuit-breaker trip ranges

F. Set field-adjustable pressure switches.

3.8 PROTECTION

A. Temporary Heating: Apply temporary heat to maintain temperature according to manufacturer's written instructions until controllers are ready to be energized and placed into service.

B. Replace VFCs whose interiors have been exposed to water or other liquids prior to Substantial Completion.

3.9 DEMONSTRATION

A. Engage a factory-authorized service representative to train Owner's maintenance personnel to adjust, operate, reprogram, and maintain VFCs.

END OF SECTION

SECTION 26 3213

ENGINE GENERATOR

PART 1 GENERAL

1.1 Summary

A This section includes the following items from a single supplier:
1. Engine Generator Set.
2. Enclosure
3. Related Accessories as specified

B Related Requirements
1. It is the intent of this specification to secure an engine-driven generator set that has been prototype tested, factory built, production-tested, and site-tested together with all accessories necessary for a complete installation as shown on the plans and drawings and specified herein.
2. Any exceptions to the published specifications shall be subject to the approval of the engineer and submitted minimum 10 days prior to the closing of the bid with a line by line summary description of all the items of compliance, any items that have been are omitted or have been taken exception to, and a complete description of all deviations.
3. It is the intent of this specification to secure a generator set system that has been tested during design verification, in production, and at the final job site. The generator set will be a commercial design and will be complete with all of the necessary accessories for complete installation as shown on the plans, drawings, and specifications herein. The equipment supplied shall meet the requirements of the National Electrical Code and applicable local codes and regulations.
4. All equipment shall be new and of current production by an international, power system manufacturer of generators, transfer switches, and paralleling switchgear. The manufacturer shall be a supplier of a complete and coordinated system. There will be single-source responsibility for warranty, parts, and service through a factory-authorized representative with factory-trained technicians.

1.2 Submittals

A Action Submittals
1. Product Data
   a The submittal shall include prototype test certification and specification sheets showing all standard and optional accessories to be supplied; schematic wiring diagrams, dimension drawings, and interconnection diagrams identifying by terminal number each required interconnection between the generator set, the transfer switch, and the remote annunciator panel if it is included elsewhere in these specifications.

B Informational Submittal
1. Certificates
   a The generator set shall be listed to UL 2200 or submitted to an independent third party certification process to verify compliance as installed.
   b The generator set shall be IBC Certified as meeting the required maximum seismic design acceleration level per the International Building Code 2000/2003 or 2006 for the specific job site. The generator shall be analyzed or shake tested by a third party, accompanied by a Certificate of Compliance, and include a seismic label on the generator set (per Section 1702 of the IBC Code). Seismic certified generators shall be installed per the specific seismic instructions provided by the manufacturer.
2. Test and Evaluation Reports

C Closeout Submittal
1. Maintenance Contracts
2. Operation And Maintenance Data
3. Warranty Documentation
4. Record Documentation

1.3 Quality Assurance

A Regulatory Agency
1. The generator set shall conform to the requirements of the following codes and standards:
a CSA C22.2, No. 14-M91 Industrial Control Equipment.
b EN50082-2, Electromagnetic Compatibility-Generic Immunity Requirements, Part 2: Industrial.
c EN55011, Limits and Methods of Measurement of Radio Interference Characteristics of Industrial, Scientific and Medical Equipment.
d IEC8528 part 4, Control Systems for Generator Sets.
e IEC Std 61000-2 and 61000-3 for susceptibility, 61000-6 radiated and conducted electromagnetic emissions.
f IEEE446 Recommended Practice for Emergency and Standby Power Systems for Commercial and Industrial Applications.
g NFPA 70, National Electrical Code, Equipment shall be suitable for use in systems in compliance to Article 700, 701, and 702.
h NFPA 99, Essential Electrical Systems for Health Care Facilities.
i NFPA 110, Emergency and Standby Power Systems. The generator set shall meet all requirements for Level 1 systems. Level 1 prototype tests required by this standard shall have been performed on a complete and functional unit. Component level type tests will not substitute for this requirement.

2. Qualifications
a The equipment shall be produced by a manufacturer who is ISO 9001 certified for the design, development, production and service of its complete product line.
b The power system shall be produced by a manufacturer who has produced this type of equipment for a period of at least 10 years and who maintains a service organization available twenty-four hours a day throughout the year.

3. Manufacturers
a The power system shall be furnished by a single manufacturer who shall be responsible for the design, coordination, and testing of the complete system. The entire system shall be installed as shown on the plans, drawings, and specifications herein.
b The generator set described herein is a Kohler model KD800, and it is with the price of this equipment that the contractor of this section shall enter with his proposal at bid time. If the contractor wishes to propose equivalent equipment, it is to be submitted in a separate document at bid time. All additional costs associated with re-engineering and mechanical & electrical modifications to the installation will be at the contractor's expense. The contractor must also supply the details listed below with his equivalent proposal:

- The associated credit for the equivalent equipment
- Any deviations from the specifications in a line by line format
- The weight & outline dimensions

Upon request, the manufacturer shall provide a notarized letter certifying compliance with all of the requirements of this specification. The certification shall identify, by serial number(s), the equipment involved. No exceptions to the specifications shall be allowed or included in the certification.

1.4 Warranty

A. Manufacturer's Warranty

1. The generator set shall include a standard warranty covering three (3) year unlimited hours whichever occurs first, to guarantee against defective material and workmanship in accordance with the manufacturer's published warranty from the date of initial startup.
2. The generator set manufacturer and its distributor shall maintain a 24-hour parts and service organization. This organization shall regularly engage in maintenance contract programs to perform preventive maintenance and service on equipment similar to that specified. A service agreement shall be available and shall include system operation under simulated operating conditions; adjustment to the generator set, transfer switch, and switchgear controls as required, and certification in the owner's maintenance log of repairs made and functional tests performed on all systems.

1.5 Maintenance Service

A. Maintenance: Beginning at owner acceptance, provide 12 months' full maintenance by skilled employees of the manufacturer's designated service organization. Include quarterly exercising to check for proper starting, load transfer, and running under load. Include routine preventative maintenance as recommended by manufacturer and adjusting as required for proper operation. Provide parts and supplies as used in the manufacture and installation of original equipment.

PART 2 PRODUCTS

2.1 Equipment

A Equipment

1. The generator set shall be a Kohler model KD800 with a KH04070 alternator. It shall provide 1000 kVA and 800 kW when operating at 277/480 volts, 60 Hz, 0.80 power factor. The generator set shall be capable of a 130°C Standby rating while operating in an ambient condition of less than or equal to 77 °F and a maximum elevation of 500 ft above sea level. The standby rating shall be available for the duration of the outage.

B Engine

1. The minimum 27 liter displacement engine shall deliver a minimum of 1195 HP at a governed engine speed of 1800 rpm, and shall be equipped with the following:
   a. Electronic isochronous governor capable of 0.25% steady-state frequency regulation
   b. 24-volt positive-engagement solenoid shift-starting motor
   c. 140-ampere automatic battery charging alternator with a solid-state voltage regulation
   d. Positive displacement, full-pressure lubrication oil pump, cartridge oil filters, dipstick, and oil drain
   e. Dry-type replaceable air cleaner elements for normal applications
   f. Engine-driven or electric fuel-transfer pump including fuel filter and electric solenoid fuel shutoff valve capable of lifting fuel
   g. The turbocharged engine shall be fueled by diesel
   h. The engine shall have a minimum of 12 cylinders and be liquid-cooled
2. The engine shall be EPA certified from the factory
3. The generator must accept rated load in one-step.

C Cooling System

1. The engine shall be liquid-cooled by a closed loop, unit mounted radiator rated to operate the generator set at full load at an ambient temperature of 50 degrees C (122 degrees F). The radiator fan and other rotating engine parts shall be guarded against accidental contact.

D Standard Air Cleaner

1. The air cleaner shall provide engine air filtration which meets the engine manufacturer's specifications under typical operating conditions.

E Battery

1. Each generator set is provided a quantity of two AGM batteries that meets the engine manufactures' specifications for the ambient conditions specified in Part 1 Project Conditions and shall comply with the NFPA requirements for engine cranking cycles. Each battery shall be rated

according to SAE Standards J-537 with a minimum cold cranking amp of 1110 amps and a minimum reserve capacity of 380 minutes at 80°F. The battery will contain two handles to aid in lifting and the case must be constructed of polypropylene to resist breakage and extend service life. AGM battery technology utilize an Absorbed Glass Mat and protects the battery's internal components by acting like a shock absorber and blocking vibration and other possible damaging movement.

2. Battery rack and battery cables capable of holding the manufacturer's recommended batteries shall be supplied.

F Housing

1. Level 2 Sound Attenuated Enclosure Weather Enclosure

a The generator set shall be supplied with a Sound Attenuated Enclosure, providing a sound pressure of 76.4 dB(A) while the generator is operating at 100% load at 7 meters (23 feet) – free field – using acoustic insulation and acoustic-lined inlet hoods, constructed from a minimum of 0.125 inch thick formed heavy duty aluminum panels. The acoustic insulation used shall meet UL 94 HF1 flammability classification. The enclosure shall be manufactured from bolted panels to facilitate service, future modifications, or field replacement. The enclosure shall use external vertical air inlet and outlet hoods with 90 degree angles to discharge air up and reduce noise. The enclosure shall have an integral rodent guard and skid end caps and shall have bracing to meet 241 kph (150 mph) wind loading.

b The enclosure components and skid shall be cleaned with a two-stage alkaline cleaning process to remove grease, grit, and grime from parts. Components shall then be subjected to a Zirconium-based conversion coating process to prepare the metal for electrocoat (e-coat) adhesion. All enclosure parts shall receive an 100% epoxy primer electrocoat (e-coat) with high-edge protection. Following the e-coat process, the parts shall be finish coated with powder baked paint for superior finish, durability, and appearance with a Power ArmorTM industrial finish that provides heavy duty durability in harsh conditions, and is fade-, scratch- and corrosion-resistant.

c The enclosure must surpass a 3,000 hour salt spray corrosion test per ASTM B-1117.

d Enclosures will be finished in the manufacturer's standard color.

e The enclosures shall allow the generator set to operate at full load in an ambient temperature of 50°C with no additional derating of the electrical output of the generator set.

f Enclosures shall be equipped with sufficient side and end doors to allow access for operation, inspection, and service of the unit and all options. Minimum requirements are two doors per side. When the generator set controller faces the rear of the generator set, an additional rear facing door is required. Access to the controller and main line circuit breaker shall meet the requirements of the National Electric Code.

g Doors shall be fitted with hinges, hardware, and the doors shall be removable.

h Doors shall be equipped with lockable latches. Locks shall be keyed alike. Door locks shall be recessed to minimize potential of damage to door/enclosure.

i A duct between the radiator and air outlet shall be provided to prevent re-circulation of hot air.

j The complete exhaust system shall be internal to the enclosure.

k The critical silencer shall be fitted with a tailpipe and rain cap.

l The generator set enclosure shall be furnished with a wall mounted 800 CFM Shutter-Mounted Exhaust Fan.

m The generator set enclosure shall be furnished with two-(2) DC lights powered by the starting battery on a fused circuit with a 0-60 minute “No-Lock-On” timer.

n The generator set enclosure shall be furnished with the battery charger wired into the load center.

o Enclosure Heater- The enclosure shall be supplied with a 5 kW, thermostatically controlled heater wired to the enclosure's distribution panel. Rated at 17100 Btu. Shall include adjustable louvers offering down flow and horizontal air tuning, built-in thermostat with automatic fan delay controls.

p Gravity Air Outlet Dampers –The generator set enclosure shall be furnished with gravity activated inlet 90° louvers to prevent entry of rain and snow, and shall be galvaneel steel construction.

q The generator set enclosure shall be furnished with the block heater wired into the load center.

r Basic Electrical Panel –The generator set enclosure shall be furnished with a load center 120/208/240VAC three phase, 100 amp max w/ main and 12 branch circuits. (1) switch control, (3) AC lights vapor tight and gasketed, and (2) duplex GFI receptacles.

G Fuel oil storage

1. Double Wall Secondary Containment Sub-base Fuel Tank

a The generator set shall be supplied with a sub-base fuel tank of sufficient capacity to hold a minimum of 24 hours of fuel at 100% loading. No less than 1749 gallons of diesel fuel.

b The sub-base fuel system shall be listed under UL 142, subsection entitled Special Purpose Tanks EFVT category, and will bear their mark of UL Approval according to their particular classification.

c The above ground steel secondary containment rectangular tank for use as a sub base for diesel generators is manufactured and intended to be installed in accordance with the Flammable and Combustible Liquids Code—NFPA 30, the Standard for Installation and Use of Stationary Combustible Engine and Gas Turbines—NFPA 37, and Emergency and Standby Power Systems—NFPA 110.

d The primary tank shall be rectangular in shape and constructed in clam shell fashion to ensure maximum structural integrity and allow the use of a full throat fillet weld.

e Steel Channel Support System. Reinforced steel box channel for generator support, with a load rating of 5,000 lbs. per generator mounting hole location. Full height gussets at either end of channel and at generator mounting holes shall be utilized.

f Exterior Finish. The sub-base tank exterior finish shall be Power Armor PlusTM, a polyurea-textured rubberized coating.

g Normal venting shall be sized in accordance with the American Petroleum Institute Standard No 2000, Venting Atmospheric and Low Pressure Storage Tanks not less than 1-1/4" (3 cm.) nominal inside diameter.

h The emergency vent opening shall be sized to accommodate the total capacity of both normal and emergency venting and shall be not less than that derived from NFPA 30, table 2-8, and based on the wetted surface area of the tank. The wetted area of the tank shall be calculated on the basis of 100 percent of the primary tank. The vent is to be spring-pressure operated: opening pressure is 0.5/psig and full opening pressure is 2.5 psig. The emergency relief vent is to be sized to accommodate the total venting capacity of both normal and emergency vents.

i There shall be a 2" NPT opening within the primary tank and lockable manual fill cap.

j A direct reading, UL listed, magnetic fuel level gauge with a hermetically sealed, vacuum tested dial, to eliminate fogging, shall be provided.

k A float switch for remote or local annunciation of a (50% standard) low fuel level condition shall be supplied.

l Inner Tank Leak Alarm Kit – Includes one light, one horn remote annunciator panel, leak alarm switch and wiring. This kit is intended when the inner tank has leaked into the outer tank, thus indicating a need for a replacement tank.

m High fuel level switch – A fuel level switch will be installed in the tank and the contacts will close when the fuel level reaches 90%.

n Fuel fill option – The fuel fill is equipped with a OSHPD and IBC approved 5 gallon above ground fill/spill container that contains fuel over spills that may occur during fill-ups and will automatic shut off fuel to the tank when the tank becomes 95% full.

H Controller

1. APM802 Controller
   a. The generator set controller shall be a microprocessor based control system that will provide automatic starting, system monitoring, and protection. The controller system shall also provide local monitoring and remote monitoring. The control system shall be capable of PC based updating of all necessary parameters, firmware, and software.
   b. The controller shall be prototype and reliability tested to ensure operation in the conditions encountered.

2. Codes and Standards
   a. The generator set controller shall be able to meet NFPA 110 Level 1 requirements.
   b. The controller shall meet NFPA 99 and NEC requirements.
   c. The controller shall be UL 508 listed.
   d. When installed on the generator, the face shall be sealed to IP65 standards.

3. Applicability
   a. The controller shall be a standard offering in the manufacturer's controller product line.
   b. The controller's environmental specification shall be: -40°C to 70°C operating temperature range and up to 95% humidity, non-condensing.
   c. The controller shall mount on the generator.

4. Hardware Requirements
   Control Panel shall include:
   a. Emergency Stop Switch. The latch type remote stop switch shall be red in color with a "mushroom" type head. Depressing the stop button will immediately stop the generator set and lockout the generator set for any automatic remote starting.
   b. Graphical Display. The controller shall have a 12 inch color touch display. The display shall be viewable in all light conditions. The display shall display status of all faults and warnings. The display shall also display any engine faults.

5. Control Functional Requirements
   The generator controller shall allow selection from four modes of operation: Out of service/Manual/Auto/Auto test
   a. Out of service shall prohibit the generator from starting.
      i. Manual shall allow a user to locally press start and stop to operate the generator. The controller shall not respond to remote start and stop commands.
      ii. Auto shall allow the generator to start and stop based on remote commands. The manual start and stop function shall not work.
      iii. Auto test shall perform a generator test, either loaded or unloaded, upon selection of this mode. The generator can be stopped either manually or remotely.
   b. The generator controller shall display and monitor the following engine and alternator functions and allow adjustments of certain parameters at the controller:
      i. Capability to adjust the time delay for engine start.
      ii. Capability to adjust the time delay for engine cool down.
      iii. Real-time clock and calendar for time stamping of events. The real-time clock shall maintain time for up to 2 years without power to the controller.
      iv. Control logic with alternator protection for overload and short circuit matched to each individual alternator and duty cycle.
         a. Conditions resulting in generator warning (generator will continue to operate): Battery charger failure

b. Common Alarm
c. Emergency power system (EPS) supplying load
d. External circuit breaker trip
e. High battery voltage
f. High coolant temperature
g. Low battery voltage
h. Low coolant pressure
i. Low coolant temperature
j. Low oil pressure
k. Low fuel level
l. Not in auto
m. Overcurrent
n. User Defined Input

v. Conditions resulting in generator shutdown:
a. Air Damper (if equipped)
b. Alternator protection
c. Common Fault
d. Emergency stop
e. Ground fault detection (if equipped)
f. High coolant temperature
g. High oil temperature
h. Low coolant level
i. Low oil pressure
j. No oil pressure signal
k. No speed sensor signal
l. Overcrank
m. Overspeed
n. Overcurrent
o. Overfrequency
p. Overpower
q. Overvoltage
r. Remote shutdown
s. Reverse power
t. Reverse VAR
u. Fail to start
v. Underfrequency
w. Undervoltage
x. User Defined Input

6. Pre-Heat
a. The controller shall support a pre-heat kit for low temperature starting conditions.

7. Overspeed
a. The generator shall support a safe and defined means of testing overspeed via a switch.

8. Control Monitoring Requirements
a. The controller shall provide password access to protect modification of parameters by unintended users.
b. The generator set shall have alarms and status indication lamps that show non-automatic status and warning and shutdown conditions. The controller shall indicate with a warning lamp and or alarm and on the digital display screen any shutdown, warning or engine fault condition that exists in the generator set system. The following alarms and shutdowns shall exist as a minimum:
i. All monitored functions must be viewable on the control panel display.
ii. The following generator set functions shall be monitored:
a. All output voltages - single phase, three phase, line to line, and line to neutral
b. All single phase and three phase currents
c. Output frequency

d. Power factor total and per phase
e. Total instantaneous kilowatt loading and kilowatts per phase
f. kVARS total and per phase
g. kW hours

iii. Engine parameters listed below shall be monitored:
a. Coolant temperature
b. Oil pressure
c. Battery voltage
d. RPM
e. Lube oil temperature
f. Crankcase pressure
g. Coolant level
h. Coolant pressure
i. Fuel level (with optional sensor)
j. Fuel temperature
k. Intake air temperature
l. Exhaust temperature (with optional sensor)
m. Fuel rate
n. Ambient temperature

iv. Operational records shall be stored in the control beginning at system startup and resettable for maintenance purposes.
a. Run time hours
b. Number of starts
c. Run time kilowatt hours
d. Run time kVARhours

v. The controller shall store the last one thousand generator set system events with date and time of the event.
a. Indication of active
b. Reset faults
c. Filter events that are displayed
d. Color coded

vi. The controller shall allow for the history log to be exported.

vii. The controller shall log key electrical and mechanical parameters for a 24 hour time period.
a. The collected data shall be stored on the controller or on a USB storage device plugged into the control panel.
b. The collected data shall be displayed on the screen and available for analysis via scrolling and zooming.

viii. For maintenance and service purposes, the controller shall store and display on demand the following information:
a. Battery voltage
b. Generator set kilowatt rating
c. Rated current
d. System voltage (line to line and line to neutral)
e. System frequency

9. Inputs and Outputs
a. Inputs
i. There shall be 1 resistive and 1 analog inputs that can be custom configured to shut down the generator set or provide a warning.
ii. All warning and shutdown values shall be accessible on the control panel display.
iii. All free input assignments (digital and analog) shall be available for configuration.
iv. The controller shall be capable of receiving optional input expansions.
v. Additional standard inputs include:
a. External ground fault detection
b. Battery power

c. Remote two-wire start
d. Remote emergency stop

b. Outputs
i. All NFPA 110 Level 1 outputs shall be available.
ii. Six digital outputs shall be available for interfacing to other equipment. All outputs shall be configurable
iii. These outputs shall drive optional 10A, Form C or Form A dry contacts.
iv. All functions listed in warnings and shutdowns shall be available as an output.
v. The controller shall be capable of receiving optional output expansions.

c. Thermocouples
i. The controller shall be capable of supporting up to 6 thermocouple inputs of type PT100 or K Thermocouple.

10. Communications
a. The controller shall communicate with the ECM for control, monitoring, diagnosis, and meet SAE J1939 standards.
b. Industry standard Modbus communication shall be available.
i. Communications shall be available for serial (Modbus RTU) and Ethernet (Modbus TCP) networks.
c. A Modbus master shall be able to monitor parameters.
d. The controller shall have the capability to communicate to a personal computer.
i. A PC software tool shall provide trending of electrical and mechanical parameters.
e. The controller shall support communication with a remote annunciator.
f. The controller shall provide Virtual Network Communication (VNC) to allow remote, secure access to the controller.
g. The controller shall support the ability to add a remote display at another location.
h. The controller shall provide a PC-based software application for monitoring and control of the system.

I Generator Overcurrent and Fault Protection

1. The generator shall come with a bus bar connection kit that is factory installed on either the left or right had side of the generator
2. The generator shall be provided with a factory installed, 80% rated line circuit breakers of size indicated on drawings that are UL489 listed. Line circuit breakers shall be sized for the rated ampacity of the loads served by the breaker per the NEC.
3. The circuit breaker(s) shall incorporate a thermo-magnetic electronic trip unit.
4. Load side lugs shall be provided from the factory. The line circuit breaker shall include auxiliary contacts, shunt trip, undervoltage trip, alarm switch, and overcurrent switch functionality. Load side breaker connections made at the factory shall be separated from field connections.
5. The shunt trip device shall be connected to trip the generator breaker when the generator-set is shut down by other protective devices.
6. When GFI is required per the NEC, additional neutrals shall be factory installed, and the alarm indication shall be integrated with the other generator-set alarms.
7. Barriers to provide segregation of wiring from an emergency source to emergency loads from all other wiring and equipment, if required by the NEC, shall be provided.

J Alternator

1. The alternator shall be salient-pole, brushless, 2/3-pitch, with 4 bus bar provision for external connections, self-ventilated, with drip-proof construction and amortisseur rotor windings, and skewed for smooth voltage waveform. The ratings shall meet the NEMA standard (MG1-32.40) temperature rise limits. The insulation shall be class H per UL1446 and the varnish shall be a vacuum pressure impregnated, fungus resistant epoxy. Temperature rise of the rotor and stator shall be limited to 130°C Standby. The PMG based excitation system shall be of brushless construction controlled by a digital, three phase sensing, solid- state, voltage regulator. The

AVR shall be capable of proper operation under severe nonlinear loads and provide individual adjustments for voltage range, stability and volts-per-hertz operations. The AVR shall be protected from the environment by conformal coating. The waveform harmonic distortion shall not exceed 5% total RMS measured line-to-line at full rated load. The TIF factor shall not exceed 50.

2. The alternator shall have a maintenance-free bearing, designed for 40000 hour B10 life. The alternator shall be directly connected to the flywheel housing with a semi-flexible coupling between the rotor and the flywheel.
3. The generator shall be inherently capable of sustaining at least 300% of rated current for at least 10 seconds under a 3-phase symmetrical short circuit without the addition of separate current-support devices.
4. Motor starting performance and voltage dip determinations shall be based on the complete generator set. The generator set shall be capable of supplying 3774.00 LRKVA for starting motor loads with a maximum instantaneous voltage dip of 35%, as measured by a digital RMS transient recorder in accordance with IEEE Standard 115. Motor starting performance and voltage dip determination that does not account for all components affecting total voltage dip, i.e., engine, alternator, voltage regulator, and governor will not be acceptable. As such, the generator set shall be prototype tested to optimize and determine performance as a generator set system.

K Vibration Isolation

1. Vibration isolators shall be provided between the engine-alternator and heavy-duty steel base.

2.2 Accessories

A. The generator set shall be supplied with a 20-ampere automatic float/equalize battery charger capable of charging lead-acid, nickel-cadmium, and VRLA (gel-cell and AGM) type batteries, with the following features:
   1. Automatic 3-stage charge cycle for up to three independent batteries simultaneously per charger
   2. Load regulation of less than +/- 0.5%
   3. LCD Digital Display: AC Input Voltmeter, DC Output Voltmeter and Ammeter (1%)
   4. LED lamp indicator for: Current Limit, AC ON, and Charger Fail
   5. Filtered output for gel-cell and AGM batteries
   6. Temperature compensation with ambient operating conditions of -40°C to 50°C and derated up to 70°C
   7. LED alarm indicator for charger failure with form "C" dry type relay contacts
   8. Redundant chargers will double the standard configuration
   9. UL 1236 Listed
   10. Meets ANSI C62.41

B. CE Certified Battery rack and battery cables capable of holding the manufacturer's recommended batteries shall be supplied.
C. The air cleaner restriction indicator shall indicate the need for maintenance of the air cleaners.
D. The generator shall be supplied with a thermostatically controlled strip heater to prevent the accumulation of moisture and dampness and to maintain the stator windings above the dew point. The heater shall be wired to be “on” at all times that the generator set is not operating.
E. The generator shall be furnished with an externally mounted, recessed, emergency stop switch (break glass, pushbutton style) protected from accidental operation.
F. The generator shall be equipped with a crankcase vent. The fumes coming from the vent (Blow-by) will need to be contained with the solids being separated and collected while the gases are being released back into the engine.
G. The generator set shall be furnished with rodent guards to prevent rodent intrusion and protect internal components.
H. Fuel pressure gauge – A pressure gauge is mounted into the fuel line to display the pressure of the incoming fuel.
I. The generator set shall be supplied with a common failure relay to provide means of signaling fault and/or shutdown conditions.
   i. The common failure relay shall remotely signal auxiliary faults, emergency stop, high engine temperature, low oil pressure, overcrank, and over speed via one single-pole, double-throw relay with 10 amps at 120 VAC contacts.

ii. The relay contacts shall be gold flashed to allow use of low current draw devices (100ma @ 28VDC min.).
iii. Once energized the relay shall remain latched until the system is reset by the main controller switch.

J. Digital Input/Output Module. The controller shall be provided with a Digital Input/Output module with 8 input connections with connection to ground and 4 output connections (Form C, 240VAC/8A or 30VDC/8A or 48VDC/0.5A).

K. The exhaust piping shall be gas proof, seamless, stainless steel, flexible exhaust bellows and includes the flex exhaust tube and the mounting hardware.

L. Block Heater - The block heater shall be thermostatically controlled, 6000 watt, 208 VAC - single phase, to maintain manufacturers recommended engine coolant temperature to meet the start-up requirements of NFPA 99 and NFPA 110, Level 1.

M. Supply flexible fuel lines to provide a flexible connection between the engine fuel fittings and the fuel supply tank piping and for the fuel return lines from the injector pump per engine manufacturer's recommendations. Flex line shall have a protective steel wire braid to protect the hose from abrasion.

N. Remote annunciator panel Multi ATS – The remote annunciator shall meet NFPA 110, Level 1 requirements and enable remote viewing of the generator status. The panel shall be connected to the generator controller via either network communication wires or via hard wired connections. Options shall be available to provide ATS source availability, contactor position, and loaded or unloaded test for up to four transfer switches. The panel shall have the capability to be either flush- mounted or surface-mounted. The annunciator shall meet UL508 requirements.

2.3 Source Quality Control

A. Non-Conforming Work

1. To ensure that the equipment has been designed and built to the highest reliability and quality standards, the manufacturer and/or local representative shall be responsible for three separate tests: design prototype tests, final production tests, and site tests.

a. **Design Prototype Tests.** Components of the emergency system, such as the engine/generator set, transfer switch, and accessories, shall not be subjected to prototype tests because the tests are potentially damaging. Rather, similar design prototypes and preproduction models shall be subject to the following tests:
i. Maximum power (kW)
ii. Maximum motor starting (kVA) at 35% instantaneous voltage dip.
iii. Alternator temperature rise by embedded thermocouple and/or by resistance method per NEMA MG1-32.6.
iv. Governor speed regulation under steady-state and transient conditions.
v. Voltage regulation and generator transient response.
vi. Harmonic analysis, voltage waveform deviation, and telephone influence factor.
vii. Three-phase short circuit tests.
viii. Alternator cooling air flow.
ix. Torsional analysis to verify that the generator set is free of harmful torsional stresses.
x. Endurance testing.

b. **Final Production Tests.** Each generator set shall be tested under varying loads with guards and exhaust system in place. Tests shall include:
i. Single-step load pickup
ii. Safety shutdown device testing
iii. Rated Power @ 0.8 PF
iv. Maximum power
v. Upon request, a witness test, or a certified test record sent prior to shipment.

c. **Site Tests.** The manufacturer's distribution representative shall perform an installation check, startup, and building load test. The engineer, regular operators, and the maintenance staff shall be notified of the time and date of the site test. The tests shall include:
i. Fuel, lubricating oil, and antifreeze shall be checked for conformity to the manufacturer's recommendations, under the environmental conditions present and expected.

ii. Accessories that normally function while the set is standing by shall be checked prior to cranking the engine. These shall include: block heaters, battery chargers, alternator strip heaters, remote annunciators, etc.

iii. Generator set startup under test mode to check for exhaust leaks, path of exhaust gases outside the building, cooling air flow, movement during starting and stopping, vibration during operation, normal and emergency line-to-line voltage and frequency, and phase rotation.

iv. Automatic start by means of a simulated power outage to test remote-automatic starting, transfer of the load, and automatic shutdown. Prior to this test, all transfer switch timers shall be adjusted for proper system coordination. Engine coolant temperature, oil pressure, and battery charge level along with generator set voltage, amperes, and frequency shall be monitored throughout the test.

v. NFPA 110 Testing. The test shall consist of 2 hours of continuous operation at 100% load using a portable resistive load bank and 1.5 hours of building load. Furnish the portable load bank, all connecting cables, metering equipment, and other equipment or devices required to perform the on-site testing. During the test, readings shall be taken every 15 minutes showing % load, voltage, amps, oil pressure, water temperature, and battery charge.

END OF SECTION

SECTION 26 3600

AUTOMATIC TRANSFER SWITCH

PART 1 GENERAL

1.1 Summary

A This section includes the following items from a single supplier:
1. Automatic transfer switch
2. Related Accessories as specified

B Related Requirements
1. It is the intent of this specification to secure an automatic transfer switch that has been prototype tested, factory built, production-tested, and site-tested together with all accessories necessary for a complete installation as shown on the plans and drawings and specified herein.
2. Any exceptions to the published specifications shall be subject to the approval of the engineer and submitted minimum 10 days prior to the closing of the bid with a line by line summary description of all the items of compliance, any items that have been are omitted or have been taken exception to, and a complete description of all deviations.
3. It is the intent of this specification to secure an automatic transfer switch that has been tested during design verification, in production, and at the final job site. The automatic transfer switch will be a commercial design and will be complete with all of the necessary accessories for complete installation as shown on the plans, drawings, and specifications herein. The equipment supplied shall meet the requirements of the National Electrical Code and applicable local codes and regulations.
4. All equipment shall be new and of current production by an international, power system manufacturer of generators, transfer switches, and paralleling switchgear. The manufacturer shall be a supplier of a complete and coordinated system. There will be single-source responsibility for warranty, parts, and service through a factory-authorized representative with factory-trained technicians.

1.2 Submittals

A Action Submittals
1. Product Data
   a The submittal shall include specification sheets showing all standard and optional accessories to be supplied; schematic wiring diagrams, dimension drawings, and interconnection diagrams identifying by terminal number each required interconnection between the generator set, the transfer switch, and the remote annunciator panel if it is included elsewhere in these specifications.

B Closeout Submittals
1. Operation And Maintenance Data
2. Warranty Documentation

1.3 Quality Assurance

A Regulatory Agency
1. The automatic transfer switch shall conform to the requirements of the following codes and standards:
   a UL 1008 - Standard for Transfer Switch Equipment
   b IEC 947-6-1 Low-voltage Switchgear and Control gear; Multifunction equipment; Automatic Transfer Switching EquipmentEN55011, Limits and Methods of Measurement of Radio Interference Characteristics of Industrial, Scientific and Medical Equipment.
   c NFPA 70 - National Electrical Code

d NFPA 99 - Essential Electrical Systems for Health Care Facilities
e NFPA 110 - Emergency and Standby Power Systems
f IEEE Standard 446 - IEEE Recommended Practice for Emergency and Standby Power Systems for Commercial and Industrial Applications
g NEMA Standard ICS 10-2005, Electromechanical AC Transfer Switch Equipment.
h EN61000-4-4 Fast Transient Immunity Severity Level 4
i EN61000-4-5 Surge Immunity Class 4 (voltage sensing and programmable inputs only)
j IEEE 472 (ANSI C37.90A) Ring Wave Test
k IEC Specifications for EMI/EMC Immunity (CISPR 11, IEC 1000-4-2, IEC 1000-4-3, IEC 1000-4-4, IEC 1000-4-5, IEC 1000-4-6, IEC 1000-4-8, IEC 1000-4-11)
l CSA C22.2 No. 178 certification

2. Qualifications
   a The automatic transfer switch shall be produced by a manufacturer who is ISO 9001 certified for the design, development, production and service of its complete product line.
   b A manufacturer who has produced this type of equipment for a period of at least 10 years and who maintains a service organization available twenty-four hours a day throughout the year shall produce the automatic transfer switch.

3. Manufacturers
   a The automatic transfer switch shall be furnished by a single manufacturer who shall be responsible for the design, coordination, and testing of the complete system. The entire system shall be installed as shown on the plans, drawings, and specifications herein.
   b The manufacturer shall maintain a national service organization of employing personnel located throughout the contiguous United States. The Service center's personnel must be factory trained and must be on call 24 hours a day, 365 days a year.
   c The manufacturer shall maintain records of each switch, by serial number, for a minimum of 20 years.

1.4 Warranty or Bond

A Manufacturer's Warranty
1. The ATS shall include a standard warranty covering five (5) year to guarantee against defective material and workmanship in accordance with the manufacturer's published warranty from the date of initial startup.
2. The ATS manufacturer and its distributor shall maintain a 24-hour parts and service organization. This organization shall regularly engage in maintenance contract programs to perform preventive maintenance and service on equipment similar to that specified. A service agreement shall be available and shall include system operation under simulated operating conditions; adjustment to the generator set, transfer switch, and switchgear controls as required, and certification in the owner's maintenance log of repairs made and functional tests performed on all systems.

PART 2 PRODUCTS

2.1 Equipment

A Equipment
1. Furnish and install an automatic transfer switches system(s) with 3-Pole / 4-Wire, Solid Neutral, of size and voltage indicated on drawings. Each automatic transfer shall consist of an inherently double throw power transfer switch mechanism and a microprocessor controller to provide automatic operation. All transfer switches and controllers shall be the products of the same manufacturer.

B Manufacturer
1. Automatic transfer switches shall be Kohler Specific Breaker Rated - Standard Transition KSS Series. Any alternate shall be submitted for approval to the consulting engineer at least 10 days prior to bid

date. Alternate bids shall include a line-by-line clarification of the specification marked with "D" for deviation; "E" for exception, and "C" for comply.

C Construction
1. The transfer switch shall be electrically operated and mechanically held with double throw construction, and operated by a momentarily energized solenoid-driven mechanism.
2. All transfer switch sizes shall use only one type of main operator for ease of maintenance and commonality of parts.
3. The switch shall be positively locked and unaffected by momentarily outages, so that contact pressure is maintained at a constant value and contact temperature rise is minimized for maximum reliability and operating life.
4. All main contacts shall be silver composition. Switches rated 600 amperes and above shall have segmented, blow-on construction for high withstand and close-on capability and be protected by separate arcing contacts.
5. Inspection of all contacts shall be possible from the front of the switch without disassembly of operating linkages and without disconnection of power conductors. Switches rated 800 amperes and higher shall have front removable and replaceable contacts. All stationary and moveable contacts shall be replaceable without removing power conductors and/or bus bars.
6. Designs utilizing components of molded-case circuit breakers, contactors, or parts thereof, which are not intended for continuous duty, repetitive switching or transfer between two active power sources, are not acceptable.
7. For two and three pole switches, where neutral conductors are to be solidly connected as shown on the plans, a neutral conductor plate with fully rated AL-CU pressure connectors shall be provided.
8. For four pole switches with a switching neutral, where neutral conductors must be switched as shown on the plans, the contactor shall be provided with fully rated switched neutral transfer contacts. Overlapping neutral contacts may be used as an alternative.

D Enclosure
1. The ATS shall be furnished in a NEMA 1 enclosure.
2. All standard door mounted switches and indicating LEDs shall be integrated into a flush-mounted, interface membrane or equivalent in the enclosure door for easy viewing & replacement. The panel shall be capable of having a manual locking feature to allow the user to lockout all membrane mounted control switches to prevent unauthorized tampering. This cover shall be mounted with hinges and have a latch that may be padlocked. The membrane panel shall be suitable for mounting by others when furnished on open type units.

2.2 Operation

A Controls
1. A four line, 20 character LCD display and dynamic 4 button keypad shall be an integral part of the controller for viewing all available data and setting desired operational parameters. Operational parameters shall also be available for viewing and control through the communications interface port or USB. The following parameters shall only be adjustable via a password protected programming on the controller:
   a Nominal line voltage and frequency
   b Single or three phase sensing
   c Operating parameter protection
   d Transfer operating mode configuration (Standard transition, Programmed transition, or Closed transition)

B Voltage and Frequency
1. Voltage (all phases) and frequency on both the normal and emergency sources shall be continuously monitored. Voltage on both normal and emergency sources and frequency on the emergency sources shall be adjustable with the following pickup, dropout, and trip setting capabilities (values shown as % of nominal unless otherwise specified):
   a Parameter Dropout/Trip Pickup/Reset

b	Under voltage	75 to 98%	85 to 100%
c	Over voltage	06 to 135%	95 to 100% of trip
d	Under frequency	95 to 99%	80 to 95%
e	Over frequency	01 to 115%	105 to 120%
f	Voltage unbalance	5 to 20%	3 to 18%

2. Repetitive accuracy of all settings shall be within ± 0.5% over an operating temperature range of -20°C to 70°C.
3. An adjustable dropout time for transient voltage and frequency excursions shall be provided. The time delays shall be 0.1 to 9.9 seconds for voltage and .1 to 15 seconds for frequency.
4. Voltage and frequency settings shall be field adjustable in 1% increments either locally with the display and keypad, remotely via the communications interface port or USB.
5. The controller shall be capable of sensing the phase rotation of both the normal and emergency sources. The source shall be considered unacceptable if the phase rotation is not the preferred rotation selected (ABC or BAC). Unacceptable phase rotation shall be indicated on the LCD; the service required LED and the annunciation through the communication protocol and dry contacts. In addition, the phase rotation sensing shall be capable of being disabled, if required.
6. The controller shall be capable of detecting a single phasing condition of a source, even though a voltage may be regenerated by the load. This condition is a loss of phase and shall be considered a failed source.
7. Source status screens shall be provided for both normal & emergency to provide digital readout of voltage on all 3 phases (phase to phase and phase to neutral), frequency, and phase rotation.

C Time Delays

1. An adjustable time delay of 0 to 6 seconds shall be provided to override momentary normal source outages and delay all transfer and engine starting signals. Capability shall be provided to extend this time delay to 60 minutes by providing an external 12 or 24 VDC power supply.
2. A time delay shall be provided on transfer to the emergency source, adjustable from 0 to 60 minutes, for controlled timing of transfer of loads to emergency.
3. A time delay shall be provided on re-transfer to normal. The time delays shall be adjustable from 0 to 60 minutes. Time delay shall be automatically bypassed if the emergency source fails and the normal source is acceptable.
4. A time delay shall be provided on shut down of engine generator for cool down, adjustable from 0 to 60 minutes.
5. A time delay activated output signal shall also be provided to drive external relay(s) for selective load disconnect and reconnect control. The controller shall be capable of controlling a maximum of 9 individual output time delays to step loads on after a transfer occurs. Each output may be individually programmed for their own time delay of up to 60 minutes. Each sequence shall be independently programmed for transferring from normal to emergency and transferring from emergency to normal.
6. All time delays shall be adjustable in 1 second increments.
7. All time delays shall be adjustable by using the display and keypad, with a remote device connected to the communications interface port or USB.
8. Each time delay shall be identified and a dynamic countdown shall be shown on the display. Active time delays can be viewed with a remote device connected to the communications interface port or USB.

D Additional Features

1. The controller shall have 3 levels of security. Level 1 shall allow monitoring of settings and parameters only. The Level 1 shall be capable of restricted with the use of a lockable cover. Level 2 shall allow test functions to be performed and Level 3 shall allow setting of all parameters.
2. The display shall provide for the test functions, allowed through password security. The test function shall be load, no load or auto test. The auto test function shall request an elapsed time for test. At the completion of this time delay the test shall be automatically ended and a retransfer sequence shall commence. All loaded tests shall be immediately ended and retransfer shall occur if the emergency source fails and the normal source is acceptable.
3. A contact closure shall be provided for a low-voltage engine start signal. The start signal shall prevent dry cranking of the engine by requiring the generator set to reach proper output, and run

the duration of the cool down setting, regardless of whether the normal source restores before the load is transferred.

4. Auxiliary contacts shall be provided consisting of a minimum of two contacts, closed when the ATS is connected to the normal source and two contacts closed, when the ATS is connected to the emergency source.
5. LED indicating lights shall be provided; one to indicate when the ATS is connected to the normal source (green) and one to indicate when the ATS is connected to the emergency source (red).
6. LED indicating lights shall be provided and energized by controller outputs. The lights shall provide true source availability of the normal (green) and emergency sources (red), as determined by the voltage, frequency and phase rotation sensing trip and reset settings for each source.
7. A membrane switch shall be provided on the membrane panel to test all indicating lights and display when pressed.
8. Provide the ability to select “commit/no commit to transfer" to determine whether the load should be transferred to the emergency generator if the normal source restores before the generator is ready to accept the load.
9. Terminals shall be provided for a remote contact which opens to signal the ATS to transfer to emergency and for remote contacts which closes to inhibit transfer to emergency and/or retransfer to normal. Both of these inhibit signals can be activated through the keypad, communications interface port or USB. A “not-in-auto" LED shall indicate anytime the controller is inhibiting transfer from occurring.
10. An in-phase monitor shall be a standard feature in the controller. The monitor shall control transfer so that motor load inrush currents do not exceed normal starting currents, and shall not require external control of power sources. The in-phase monitor shall be specifically designed for and be the product of the ATS manufacturer. The in-phase monitor shall be capable of being enabled or disabled from the user interface, communications interface port or USB.
11. A time based load control feature shall be available to allow the prioritized addition and removal of loads based during transfer. This feature may be enabled for either or both sources. The user shall be able to control up to nine loads with independent timing sequences for pre and post transfer delays in either direction of transfer.
12. The controller shall provide 2 inputs for external controls that can be programmed from the following values:
    a Common fault, Remote test, Inhibit transfer, Low battery voltage, Peak shave, Time delay bypass, Load shed forced to OFF position (Programmed transition only)
13. The controller shall provide two form "C" contact outputs rated for up to 12A @ 240VAC or 2A @ 480VAC that can be programmed from the following values:
    a Aux switch open, Transfer switch aux contact fault, Alarm silenced, Alarm active, I/O communication loss, Contactor position, Exercise active, Test mode active, Fail to transfer, Fail to acquire standby source, Source available, Phase rotation error, Not in automatic mode, Common alarm, In phase monitor sync, Load bank control active, Load control active, Maintenance mode active, Non-emergency transfer, Fail to open/close, Loss of phase, Over/under voltage, Over/under frequency, Voltage unbalance, Start signal, Peak shave active, Preferred source supplying load, Standby source supplying load
14. The controller shall be capable of expanding the number of inputs and outputs with additional modules.
15. Optional input/output modules shall be furnished which mount on the inside of the enclosure to facilitate ease of connections.
16. Engine Exerciser - The controller shall provide an internal engine exerciser. The engine exerciser shall allow the user to program up to 21 different exercise routines based on a calendar mode. For each routine, the user shall be able to:
    a Enable or disable the routine
    b Enable or disable transfer of the load during routine.
    c Set the start time, time of day, day of week, week of month (1st, 2nd, 3rd, 4th, alternate or every)
    d Set the duration of the run.
    e At the end of the specified loaded exercise duration the switch shall transfer the load back to normal and run the generator for the specified cool down period. All loaded exercises shall be immediately ended and retransfer shall occur if the standby source fails. The next exercise

period shall be displayed on the main screen with the type of exercise, time and date. The type of exercise and the time remaining shall be display when the exercise is active. It shall be possible of ending the exercise event with a single button push.

17. Date and time - The date shall automatically adjust for leap year and the time shall have the capability of automatically adjusting for daylight saving and standard times.
18. System Status - The controller shall have a default display the following on:
    a System status
    b Date, time and type of the next exercise event
    c Average voltage of the preferred and standby sources
    d Scrolling through the displays shall indicate the following:
        i) Line to line and line to neutral voltages for both sources
        ii) Frequency of each source
        iii) Load current for each phase
        iv) Single or three phase operation
        v) Type of transition
        vi) Preferred source
        vii) Commit or no commit modes of operation
        viii) Source/source mode
        ix) In phase monitor enable/disable
        x) Phase rotation
        xi) Date and time
19. Controllers that require multiple screens to determine system status or display “coded" system status messages, which must be explained by references in the operator’s manual, are not permissible.
20. Self-Diagnostics - The controller shall contain a diagnostic screen for the purpose of detecting system errors. This screen shall provide information on the status input signals to the controller which may be preventing load transfer commands from being completed.
21. Communications Interface - The controller shall be capable of interfacing, through a standard communications with a network of transfer switches and generators. It shall be able to be connected via an RS-485 serial communication (up to 4000 ft. direct connect or multi-drop configuration). This module shall allow for seamless integration of existing or new communication transfer devices and generators.
22. The transfer switch shall also be able to interface to 3rd party applications using Modbus RTU open standard protocols utilizing Modbus register maps. Proprietary protocols shall not be acceptable.
23. The controller shall contain a USB port for use with a software diagnostic application available to factory authorized personnel for downloading the controller’s parameters and settings; exercise event schedules; maintenance records and event history. The application can also adjust parameters on the controller.
24. Data Logging - The controller shall have the ability to log data and to maintain the last 2000 events, even in the event of total power loss. The following events shall be time and date stamped and maintained in a non-volatile memory. The controller shall be able to display up to the last 99 events. The remaining events shall be accessible via the communications interface port or USB.
    a Event Logging
        i) Data, date and time indication of any event
    b Statistical Data
        i) Total number of transfers*
        ii) Total number of fail to transfers*
        iii) Total number of transfers due to preferred source failure*
        iv) Total number of minutes of operation*
        v) Total number of minutes in the standby source*
        vi) Total number of minutes not in the preferred source*
        vii) Normal to emergency transfer time
        viii) Emergency to normal transfer time
        ix) System start date
        x) Last maintenance date

xi) * The statistical data shall be held in two registers. One register shall contain data since start up and the second register shall contain data from the last maintenance reset.

25. External DC Power Supply - An optional provision shall be available to connect up to two external 12/24 VDC power supply to allow the LCD and the door mounted control indicators to remain functional when both power sources are dead for extended periods of time. This module shall contain reverse battery connection indication and circuit protection.

2.3 Accessories

A. Padlockable User Interface Cover. The user interface cover shall protect the controller user interface from the environment.

B. Controller Disconnect Switch. A Logic disconnect switch shall be mounted inside the enclosure, and shall disconnect power to controller without disconnecting the load. The logic disconnect switch shall disconnect utility power to the controller during maintenance and service without disconnecting power to the load. The switch has two positions, auto and disconnect. The disconnect position shall disconnect the voltage sensing leads for the utility source (A, B, C, N). It is assumed that the user shall disable the generator by placing the controller in the OFF position.

C. Seismic Certification. The seismic certification shall be available for 150-3000 amp switches with NEMA 1 enclosures. Certification shall depend on geographic location. Contact local distributor for details

D. Heater, Anti-Condensation. An enclosure heater strip shall be supplied inside the transfer switch enclosure and shall be controlled by an adjustable humidistat. The humidistat shall be adjustable from 35% to 95% relative humidity, factory set at 65%. 120VAC power for the strip heater is to be provided by others. A 15A protective circuit breaker is provided. The heater option shall provide 125W or 250W, pending on the configured kit selection.

E. Surge Protection Device (SPD). A SPD shall be provided for protection of the normal source supply. The SPD shall be provided with replaceable cartridges to allow replacement of components without disconnecting the normal source supply. A 90dB audible alarm shall be provided as standard. A terminal block for remote contacts shall be provided. The SPD shall provide L-L, L-N, L-G, and N-G lines protection. LED status indicators shall be available on the face of the device to indicate operational state. The SPD device shall be listed to UL 1449, Edition 3.

F. Supervised Transfer Control Switch. The supervised transfer control switch shall provide a door mounted, three position, selector switch with Auto, Manual and Transfer positions.
   i. With the controller set to the automatic mode and the selector switch in the Auto position, the user transfer switch shall operate normally.
   ii. With the controller set to the automatic mode and the selector switch in the Manual position, the user shall be required to toggle the selector switch to initiate a transfer from the emergency to the normal position.
   iii. With the controller set to the non-automatic mode and the selector switch in the Manual position, the user shall be required to toggle the selector switch to the transfer position to initiate a transfer in either direction. In this mode, the ATS shall not automatically transfer to an acceptable source in the case of source failure, without the user toggling the selector switch to the transfer position.

G. High Power I/O Module. The high power I/O Module has two programmable inputs and three programmable outputs.
   i. Inputs Available 2
      1. Contact Closure
      2. Current 5mA Max.
      3. Connection Type Terminal Strip
      4. Wire Size #14-24 AWG
      5. Max Distance 700 feet
   ii. Outputs Available 3
      1. Contact Type Form C (SPDT)
      2. Contact Rating 12A @ 24VDC, 12A @ 250VAC, 10A @ 277VAC, 2A @ 480VAC
      3. Connection Type Terminal Strip
      4. Wire Size #14-24

H. Standard I/O Module. The standard I/O Module shall have two programmable inputs and six programmable outputs.
    i. Inputs Available 2
        1. Contact Closure
        2. Current 5mA Max.
        3. Connection Type Terminal Strip
        4. Wire Size #14-24 AWG
        5. Max Distance 700 feet
    ii. Outputs Available 6
        1. Contact Type Form C (SPDT)
        2. Contact Rating 2A @ 30VDC, 500mA @ 125VAC
        3. Connection Type Terminal Strip
        4. Wire Size #14-24

I. Alarm Module. The alarm module shall be 90dB audible alarm; any alarm function can be programmed to trigger the audible alarm, with external alarm connection. The audible alarm can be set to sound under selected fault conditions through setup on the user interface. The other options that can be activated with the alarm board are the Chicago alarm option, Preferred Source selection and the Supervised Transfer Control Switch.

J. External Battery Supply Module. The external battery shall energize the ATS controls using an external battery when no source power is available, allow extended engine start time delays, the use of any combination of accessory modules, connect to one or two batteries, 12 VDC or 24 VDC, current draw, 140 mA @ 12 VDC, 86 mA @ 24 VDC, shall provide low external battery voltage indication to the transfer switch controller, and reverse-polarity protected.

K. Line to Neutral Monitoring. Line-to-neutral voltage monitoring shall allow the display of the AN, BN, and CN RMS voltages in the normal operation menus.

L. Digital Meter. The digital meter shall be capable of setting and displaying voltage, current, frequency and power for both sources. Programmable visual alarms shall be standard for high and low voltage and high current. A serial, RS-485 port and two auxiliary contacts shall be standard. Programming menus shall be password protected.

M. Current Sensing. Current sensing shall measure the load bus current on all phases with 1% accuracy. Load current shall be viewable on the controller LCD display.

2.4 Source Quality Control

A Test and Inspection

1. Upon request, the manufacturer shall provide a notarized letter certifying compliance with all of the requirements of this specification including compliance with the above codes and standards. The certification shall identify, by serial number(s), the equipment involved. No exceptions to the specifications, other than those stipulated at the time of the submittal, shall be included in the certification.
2. The ATS manufacturer shall be certified to ISO 9001 International Quality Standard and the manufacturer shall have third party certification verifying quality assurance in design/development, production, installation and servicing in accordance with ISO 9001.

END OF SECTION

SECTION 26 4113

LIGHTNING PROTECTION FOR STRUCTURES

PART 1 - GENERAL

1.1 RELATED DOCUMENTS

A. Drawings and general provisions of the Contract, including General and Supplementary Conditions and Division 01 Specification Sections, apply to this Section.

1.2 SUMMARY

A. Section includes lightning protection for structures.

1.3 ACTION SUBMITTALS

A. Product Data: For each type of product indicated.

B. Shop Drawings: For air terminals and mounting accessories.
   1. Layout of the lightning protection system, along with details of the components to be used in the installation.
   2. Include indications for use of raceway, data on how concealment requirements will be met, and calculations required by NFPA 780 for bonding of grounded and isolated metal bodies.

1.4 INFORMATIONAL SUBMITTALS

A. Qualification Data: For qualified Installer and manufacturer. Include data on listing or certification by UL.

B. Certification, signed by Contractor, that roof adhesive is approved by manufacturer of roofing material.

C. Field quality-control reports.

D. Comply with recommendations in NFPA 780, Annex D, "Inspection and Maintenance of Lightning Protection Systems," for maintenance of the lightning protection system.

E. Other Informational Submittals: Plans showing dimensioned as-built locations of grounding features, including the following:
   1. Ground rods.
   2. Ground loop conductor.

1.5 QUALITY ASSURANCE

A. Installer Qualifications: Certified by UL, trained and approved for installation of units required for this Project.

B. System Certificate:
   1. UL Master Label.

2. LPI System Certificate.
3. UL Master Label Recertification.

C. Electrical Components, Devices, and Accessories: Listed and labeled as defined in NFPA 780, "Definitions" Article.

1.6 COORDINATION

A. Coordinate installation of lightning protection with installation of other building systems and components, including electrical wiring, supporting structures and building materials, metal bodies requiring bonding to lightning protection components, and building finishes.

B. Coordinate installation of air terminals attached to roof systems with roofing manufacturer and Installer.

C. Flashings of through-roof assemblies shall comply with roofing manufacturers' specifications.

PART 2 - PRODUCTS

2.1 LIGHTNING PROTECTION SYSTEM COMPONENTS

A. Comply with UL 96 and NFPA 780.

B. Roof-Mounted Air Terminals: NFPA 780, Class I, copper unless otherwise indicated.
1. Manufacturers: Subject to compliance with requirements, available manufacturers offering products that may be incorporated into the Work include, but are not limited to, the following:
   a. East Coast Lightning Equipment Inc.
   b. ERICO International Corporation.
   c. Harger.
   d. Heary Bros. Lightning Protection Co. Inc.
   e. Independent Protection Co.
   f. Preferred Lightning Protection.
   g. Robbins Lightning, Inc.
   h. Thompson Lightning Protection, Inc.
   i. National Lightning Protection Corporation.
2. Air Terminals More than 24 Inches Long: With brace attached to the terminal at not less than half the height of the terminal.
3. Single-Membrane, Roof-Mounted Air Terminals: Designed specifically for single-membrane roof system materials. Comply with requirements in roofing Sections.

C. Main and Bonding Conductors: Copper.

D. Ground Loop Conductor: The same size and type as the main conductor except tinned.

E. Ground Rods: Copper-clad steel; 3/4 inch in diameter by 10 feet long.

F. Heavy-Duty, Stack-Mounted, Lightning Protection Components: Solid copper.

PART 3 - EXECUTION

3.1 INSTALLATION

A. Install lightning protection components and systems according to UL 96A and NFPA 780.

B. Install conductors with direct paths from air terminals to ground connections. Avoid sharp bends.

C. Conceal the following conductors:
   1. System conductors.
   2. Down conductors.
   3. Interior conductors.
   4. Conductors within normal view of exterior locations at grade within 200 feet of building.

D. Cable Connections: Use crimped or bolted connections for all conductor splices and connections between conductors and other components. Use exothermic-welded connections in underground portions of the system.

E. Cable Connections: Use exothermic-welded connections for all conductor splices and connections between conductors and other components.
   1. Exception: In single-ply membrane roofing, exothermic-welded connections may be used only below the roof level.

F. Air Terminals on Single-Ply Membrane Roofing: Comply with roofing membrane and adhesive manufacturer's written instructions.

G. Bond extremities of vertical metal bodies exceeding 60 feet in length to lightning protection components.

H. Ground Loop: Install ground-level, potential equalization conductor and extend around the perimeter of structure.
   1. Bury ground ring not less than 24 inches from building foundation.
   2. Bond ground terminals to the ground loop.
   3. Bond grounded building systems to the ground loop conductor within 12 feet of grade level.

I. Bond lightning protection components with intermediate-level interconnection loop conductors to grounded metal bodies of building at 60-foot intervals.

3.2 SLEEVE AND SLEEVE-SEAL INSTALLATION FOR ELECTRICAL PENETRATIONS

A. Install sleeves and sleeve seals at penetrations of exterior floor and wall assemblies. Comply with requirements in Section 26 0544 "Sleeves and Sleeve Seals for Electrical Raceways and Cabling."

3.3 CORROSION PROTECTION

A. Do not combine materials that can form an electrolytic couple that will accelerate corrosion in the presence of moisture unless moisture is permanently excluded from junction of such materials.

B. Use conductors with protective coatings where conditions cause deterioration or corrosion of conductors.

3.4 FIELD QUALITY CONTROL

A. Notify Architect at least 48 hours in advance of inspection before concealing lightning protection components.

B. UL Inspection: Meet requirements to obtain a UL Master Label for system.

C. LPI System Inspection: Meet requirements to obtain an LPI System Certificate.

END OF SECTION

SECTION 26 4313

SURGE PROTECTION FOR LOW-VOLTAGE ELECTRICAL POWER CIRCUITS

PART 1 - GENERAL

1.1 RELATED DOCUMENTS

A. Drawings and general provisions of the Contract, including General and Supplementary Conditions and Division 01 Specification Sections, apply to this Section.

1.2 SUMMARY

A. Section includes field-mounted SPDs for low-voltage (120 to 600 V) power distribution and control equipment.

B. Related Requirements:

1. Section 26 2413 "Switchboards" for factory-installed SPDs.
2. Section 26 2416 "Panelboards" for factory-installed SPDs.

1.3 DEFINITIONS

A. Inominal: Nominal discharge current.

B. MCOV: Maximum continuous operating voltage.

C. Mode(s), also Modes of Protection: The pair of electrical connections where the VPR applies.

D. MOV: Metal-oxide varistor; an electronic component with a significant non-ohmic current-voltage characteristic.

E. OCPD: Overcurrent protective device.

F. SCCR: Short-circuit current rating.

G. SPD: Surge protective device.

H. VPR: Voltage protection rating.

1.4 ACTION SUBMITTALS

A. Product Data: For each type of product.

1. Include rated capacities, operating characteristics, electrical characteristics, and furnished specialties and accessories.
2. Copy of UL Category Code VZCA certification, as a minimum, listing the tested values for

VPRs, Inominal ratings, MCOVs, type designations, OCPD requirements, model numbers, system voltages, and modes of protection.

1.5 INFORMATIONAL SUBMITTALS

A. Field quality-control reports.

B. Sample Warranty: For manufacturer's special warranty.

1.6 CLOSEOUT SUBMITTALS

A. Maintenance Data: For SPDs to include in maintenance manuals.

1.7 WARRANTY

A. Manufacturer's Warranty: Manufacturer agrees to replace or replace SPDs that fail in materials or workmanship within specified warranty period.

1. Warranty Period: Five years from date of Substantial Completion.

PART 2 - PRODUCTS

2.1 GENERAL SPD REQUIREMENTS

A. SPD with Accessories: Listed and labeled as defined in NFPA 70, by a qualified testing agency, and marked for intended location and application.

B. Comply with NFPA 70.

C. Comply with UL 1449.

D. MCOV of the SPD shall be the nominal system voltage.

2.2 SERVICE ENTRANCE SUPPRESSOR

A. SPDs: Comply with UL 1449, Type 1.

B. SPDs: Listed and labeled by an NRTL acceptable to authorities having jurisdiction as complying with UL 1449, Type 1

1. SPDs with the following features and accessories:

a. Integral disconnect switch.
b. Internal thermal protection that disconnects the SPD before damaging internal suppressor components.
c. Indicator light display for protection status.
d. Form-C contacts rated at 5 A and 250-V ac, one normally open and one normally

closed, for remote monitoring of protection status. Contacts shall reverse on failure of any surge diversion module or on opening of any current-limiting device. Coordinate with building power monitoring and control system.

e. Surge counter.

C. Comply with UL 1283.

D. Peak Surge Current Rating: The minimum single-pulse surge current withstand rating per phase shall not be less than 200 kA. The peak surge current rating shall be the arithmetic sum of the ratings of the individual MOVs in a given mode.

E. Protection modes and UL 1449 VPR for grounded wye circuits with 480Y/277 V or 208Y/120 V, three-phase, four-wire circuits shall not exceed the following:

1. Line to Neutral: 1200 V for 480Y/277 V and 700 V for 208Y/120 V.
2. Line to Ground: 1200 V for 480Y/277 V and 1200 V for 208Y/120 V.
3. Line to Line: 2000 V for 480Y/277 V and 1000 V for 208Y/120 V.

F. Protection modes and UL 1449 VPR for 240/120 V, single-phase, three-wire circuits shall not exceed the following:

1. Line to Neutral: 700 V.
2. Line to Ground: 700 V.
3. Line to Line: 1000 V.

G. SCCR: Equal or exceed 200 kA.

H. Inominal Rating: 20 kA.

2.3 PANEL SUPPRESSORS

A. SPDs: Comply with UL 1449, Type 1.

1. Include LED indicator lights for power and protection status.
2. Internal thermal protection that disconnects the SPD before damaging internal suppressor components.
3. Include Form-C contacts rated at 5 A and 250-V ac, one normally open and one normally closed, for remote monitoring of protection status. Contacts shall reverse on failure of any surge diversion module or on opening of any current-limiting device. Coordinate with building power monitoring and control system.

B. Peak Surge Current Rating: The minimum single-pulse surge current withstand rating per phase shall not be less than 100 kA. The peak surge current rating shall be the arithmetic sum of the ratings of the individual MOVs in a given mode.

C. Comply with UL 1283.

D. Protection modes and UL 1449 VPR for grounded wye circuits with 480Y/277 V or 208Y/120 V, three-phase, four-wire circuits shall not exceed the following:

1. Line to Neutral: 1200 V for 480Y/277 V and 700 V for 208Y/120 V.
2. Line to Ground: 1200 V for 480Y/277 V and 700 V for 208Y/120 V.

3. Neutral to Ground: 1200 V for 480Y/277 V and 700 V for 208Y/120 V.
4. Line to Line: 2000 V for 480Y/277 V and 1200 V for 208Y/120 V

E. Protection modes and UL 1449 VPR for 240/120-V, single-phase, three-wire circuits shall not exceed the following:

1. Line to Neutral: 700 V.
2. Line to Ground: 700 V.
3. Neutral to Ground: 700 V.
4. Line to Line: 1200 V.

F. SCCR: Equal or exceed 200 kA.

G. Inominal Rating: 20 kA.

2.4 ENCLOSURES

A. Indoor Enclosures: NEMA 250, Type 1.

B. Outdoor Enclosures: NEMA 250, Type 3R.

2.5 CONDUCTORS AND CABLES

A. Power Wiring: Same size as SPD leads, complying with Section 26 0519 "Low-Voltage Electrical Power Conductors and Cables."

B. Class 2 Control Cables: Multiconductor cable with copper conductors not smaller than No. 18 AWG, complying with Section 26 0519 "Low-Voltage Electrical Power Conductors and Cables."

C. Class 1 Control Cables: Multiconductor cable with copper conductors not smaller than No. 14 AWG, complying with Section 26 0519 "Low-Voltage Electrical Power Conductors and Cables."

PART 3 - EXECUTION

3.1 INSTALLATION

A. Comply with NECA 1.

B. Install an OCPD or disconnect as required to comply with the UL listing of the SPD.

C. Install SPDs with conductors between suppressor and points of attachment as short and straight as possible, and adjust circuit-breaker positions to achieve shortest and straightest leads. Do not splice and extend SPD leads unless specifically permitted by manufacturer. Do not exceed manufacturer's recommended lead length. Do not bond neutral and ground.

D. Use crimped connectors and splices only. Wire nuts are unacceptable.

E. Wiring:

1. Power Wiring: Comply with wiring methods in Section 26 0519 "Low-Voltage Electrical Power Conductors and Cables."
2. Controls: Comply with wiring methods in Section 26 0519 "Low-Voltage Electrical Power Conductors and Cables."

3.2 FIELD QUALITY CONTROL

A. Perform the following tests and inspections with the assistance of a factory-authorized service representative.

1. Compare equipment nameplate data for compliance with Drawings and Specifications.
2. Inspect anchorage, alignment, grounding, and clearances.
3. Verify that electrical wiring installation complies with manufacturer's written installation requirements.

B. An SPD will be considered defective if it does not pass tests and inspections.

C. Prepare test and inspection reports.

3.3 STARTUP SERVICE

A. Complete startup checks according to manufacturer's written instructions.

B. Do not perform insulation-resistance tests of the distribution wiring equipment with SPDs installed. Disconnect SPDs before conducting insulation-resistance tests, and reconnect them immediately after the testing is over.

C. Energize SPDs after power system has been energized, stabilized, and tested.

3.4 DEMONSTRATION

A. Engage a factory-authorized service representative to train Owner's maintenance personnel to operate and maintain SPDs.

END OF SECTION

SECTION 26 5119

LED INTERIOR LIGHTING

PART 1 - GENERAL

1.1 RELATED DOCUMENTS

A. Drawings and general provisions of the Contract, including General and Supplementary Conditions and Division 01 Specification Sections, apply to this Section.

1.2 SUMMARY

A. Section includes the following types of LED luminaires:

1. Cylinder.
2. Downlight.
3. Highbay, linear.
4. Linear industrial.
5. Lowbay.
6. Parking garage.
7. Recessed linear.
8. Strip light.
9. Surface mount, linear.
10. Surface mount, nonlinear.
11. Suspended, linear.
12. Suspended, nonlinear.
13. Materials.
14. Finishes.
15. Luminaire support.

B. Related Requirements:

1. Section 26 0923"Lighting Control Devices" for automatic control of lighting, including time switches, photoelectric relays, occupancy sensors, and multipole lighting relays and contactors.

1.3 DEFINITIONS

A. CCT: Correlated color temperature.

B. CRI: Color Rendering Index.

C. Fixture: See "Luminaire."

D. IP: International Protection or Ingress Protection Rating.

E. LED: Light-emitting diode.

F. Lumen: Measured output of lamp and luminaire, or both.

G. Luminaire: Complete lighting unit, including lamp, reflector, and housing.

1.4 ACTION SUBMITTALS

A. Product Data: For each type of product.

1. Arrange in order of luminaire designation.
2. Include data on features, accessories, and finishes.
3. Include physical description and dimensions of luminaires.
4. Include emergency lighting units, including batteries and chargers.
5. Include life, output (lumens, CCT, and CRI), and energy efficiency data.
6. Photometric data and adjustment factors based on laboratory tests, complying with IES Lighting Measurements Testing and Calculation Guides, of each luminaire type. The adjustment factors shall be for lamps and accessories identical to those indicated for the luminaire as applied in this Project IES LM-79 and IES LM-80.

    a. Manufacturers' Certified Data: Photometric data certified by manufacturer's laboratory with a current accreditation under the National Voluntary Laboratory Accreditation Program for Energy Efficient Lighting Products.
    b. Testing Agency Certified Data: For indicated luminaires, photometric data certified by a qualified independent testing agency. Photometric data for remaining luminaires shall be certified by manufacturer.

B. Shop Drawings: For nonstandard or custom luminaires.

1. Include plans, elevations, sections, and mounting and attachment details.
2. Include details of luminaire assemblies. Indicate dimensions, weights, loads, required clearances, method of field assembly, components, and location and size of each field connection.
3. Include diagrams for power, signal, and control wiring.

C. Samples: For each luminaire and for each color and texture with standard factory-applied finish.

D. Samples for Initial Selection: For each type of luminaire with custom factory-applied finishes.

1. Include Samples of luminaires and accessories involving color and finish selection.

E. Samples for Verification: For each type of luminaire.

1. Include Samples of luminaires and accessories to verify finish selection.

F. Product Schedule: For luminaires and lamps.

1.5 INFORMATIONAL SUBMITTALS

A. Coordination Drawings: Reflected ceiling plan(s) and other details, drawn to scale, on which the following items are shown and coordinated with each other, using input from installers of the items involved:

1. Luminaires.
2. Suspended ceiling components.
3. Partitions and millwork that penetrate the ceiling or extend to within 12 inches of the plane of the luminaires.

4. Structural members to which equipment and or luminaires will be attached.
5. Initial access modules for acoustical tile, including size and locations.
6. Items penetrating finished ceiling, including the following:

    a. Other luminaires.
    b. Air outlets and inlets.
    c. Speakers.
    d. Sprinklers.
    e. Access panels.
    f. Ceiling-mounted projectors.

7. Moldings.

B. Qualification Data: For testing laboratory providing photometric data for luminaires.

C. Seismic Qualification Certificates: For luminaires, accessories, and components, from manufacturer.

1. Basis for Certification: Indicate whether withstand certification is based on actual test of assembled components or on calculation.
2. Dimensioned Outline Drawings of Equipment Unit: Identify center of gravity and locate and describe mounting and anchorage provisions.

D. Detailed description of equipment anchorage devices on which the certification is based and their installation requirements.

E. Product Certificates: For each type of luminaire.

F. Product Test Reports: For each luminaire, for tests performed by a qualified testing agency.

G. Sample warranty.

1.6 CLOSEOUT SUBMITTALS

A. Operation and Maintenance Data: For luminaires and lighting systems to include in operation and maintenance manuals.

1. Provide a list of all lamp types used on Project; use ANSI and manufacturers' codes.

1.7 MAINTENANCE MATERIAL SUBMITTALS

A. Furnish extra materials that match products installed and that are packaged with protective covering for storage and identified with labels describing contents.

1. Lamps: Ten for every 100 of each type and rating installed. Furnish at least one of each type.
2. Diffusers and Lenses: One for every 100 of each type and rating installed. Furnish at least one of each type.
3. Globes and Guards: One for every 20 of each type and rating installed. Furnish at least one of each type.

1.8 QUALITY ASSURANCE

A. Luminaire Photometric Data Testing Laboratory Qualifications: Luminaire manufacturer's laboratory that is accredited under the NVLAP for Energy Efficient Lighting Products.

B. Luminaire Photometric Data Testing Laboratory Qualifications: Provided by an independent agency, with the experience and capability to conduct the testing indicated, that is an NRTL as defined by OSHA in 29 CFR 1910.7, accredited under the NVLAP for Energy Efficient Lighting Products, and complying with the applicable IES testing standards.

C. Provide luminaires from a single manufacturer for each luminaire type.

D. Each luminaire type shall be binned within a three-step MacAdam Ellipse to ensure color consistency among luminaires.

E. Mockups: For interior luminaires in room or module mockups, complete with power and control connections.

1. Obtain Architect's approval of luminaires in mockups before starting installations.
2. Maintain mockups during construction in an undisturbed condition as a standard for judging the completed Work.
3. Approval of mockups does not constitute approval of deviations from the Contract Documents contained in mockups unless Architect specifically approves such deviations in writing.
4. Subject to compliance with requirements, approved mockups may become part of the completed Work if undisturbed at time of Substantial Completion.

1.9 DELIVERY, STORAGE, AND HANDLING

A. Protect finishes of exposed surfaces by applying a strippable, temporary protective covering before shipping.

1.10 WARRANTY

A. Warranty: Manufacturer and Installer agree to repair or replace components of luminaires that fail in materials or workmanship within specified warranty period.

B. Warranty Period: **Five** year(s) from date of Substantial Completion.

PART 2 - PRODUCTS

2.1 PERFORMANCE REQUIREMENTS

A. Seismic Performance: Luminaires shall withstand the effects of earthquake motions determined according to ASCE 7.

B. Seismic Performance: Luminaires and lamps shall be labeled vibration and shock resistant.

1. The term "withstand" means "the luminaire will remain in place without separation of any parts when subjected to the seismic forces specified and the luminaire will be fully operational during and after the seismic event."

2.2 LUMINAIRE REQUIREMENTS

A. Electrical Components, Devices, and Accessories: Listed and labeled as defined in NFPA 70, by a qualified testing agency, and marked for intended location and application.

B. Standards:

1. ENERGY STAR certified.
2. California Title 24 compliant.
3. NRTL Compliance: Luminaires for hazardous locations shall be listed and labeled for indicated class and division of hazard by an NRTL.
4. FM Global Compliance: Luminaires for hazardous locations shall be listed and labeled for indicated class and division of hazard by FM Global.
5. UL Listing: Listed for damp location.
6. Recessed luminaires shall comply with NEMA LE 4.
7. User Replaceable Lamps:

    a. Bulb shape complying with ANSI C78.79.
    b. Lamp base complying with ANSI C81.61 or IEC 60061-1.

C. CRI of **minimum of 80** <**Insert number**>. CCT as specified on drawings.

D. Rated lamp life of **50,000** hours to L90.

E. Lamps dimmable from 100 percent to 0 percent of maximum light output.

F. Internal driver.

G. Nominal Operating Voltage: 120 V ac.

1. Lens Thickness: At least 0.125 inch minimum unless otherwise indicated.

H. Housings:

1. Extruded-aluminum housing and heat sink.
2. Powder-coat finish.

2.3 MATERIALS

A. Metal Parts:

1. Free of burrs and sharp corners and edges.
2. Sheet metal components shall be steel unless otherwise indicated.
3. Form and support to prevent warping and sagging.

B. Doors, Frames, and Other Internal Access: Smooth operating, free of light leakage under operating conditions, and designed to permit relamping without use of tools. Designed to prevent doors, frames, lenses, diffusers, and other components from falling accidentally during relamping and when secured in operating position.

C. Diffusers and Globes:
1. Acrylic Diffusers: One hundred percent virgin acrylic plastic, with high resistance to yellowing and other changes due to aging, exposure to heat, and UV radiation.
2. Glass: Annealed crystal glass unless otherwise indicated.

3. Lens Thickness: At least 0.125 inch minimum unless otherwise indicated.

D. Factory-Applied Labels: Comply with UL 1598. Include recommended lamps. Locate labels where they will be readily visible to service personnel, but not seen from normal viewing angles when lamps are in place.

1. Label shall include the following lamp characteristics:

a. "USE ONLY" and include specific lamp type.
b. Lamp diameter, shape, size, wattage, and coating.
c. CCT and CRI for all luminaires.

2.4 METAL FINISHES

A. Variations in finishes are unacceptable in the same piece. Variations in finishes of adjoining components are acceptable if they are within the range of approved Samples and if they can be and are assembled or installed to minimize contrast.

2.5 LUMINAIRE SUPPORT

A. Comply with requirements in Section 26 0529 "Hangers and Supports for Electrical Systems" for channel and angle iron supports and nonmetallic channel and angle supports.

B. Single-Stem Hangers: 1/2-inch steel tubing with swivel ball fittings and ceiling canopy. Finish same as luminaire.

C. Wires: ASTM A 641/A 641 M, Class 3, soft temper, zinc-coated steel, 12 gage.

D. Rod Hangers: 3/16-inch minimum diameter, cadmium-plated, threaded steel rod.

E. Hook Hangers: Integrated assembly matched to luminaire, line voltage, and equipment with threaded attachment, cord, and locking-type plug.

PART 3 - EXECUTION

3.1 EXAMINATION

A. Examine substrates, areas, and conditions, with Installer present, for compliance with requirements for installation tolerances and other conditions affecting performance of the Work.

B. Examine roughing-in for luminaire to verify actual locations of luminaire and electrical connections before luminaire installation. Proceed with installation only after unsatisfactory conditions have been corrected.

3.2 TEMPORARY LIGHTING

A. If approved by the Architect, use selected permanent luminaires for temporary lighting. When construction is sufficiently complete, clean luminaires used for temporary lighting and install new lamps.

3.3 INSTALLATION

A. Comply with NECA 1.

B. Install luminaires level, plumb, and square with ceilings and walls unless otherwise indicated.

C. Install lamps in each luminaire.

D. Supports:

1. Sized and rated for luminaire weight.
2. Able to maintain luminaire position after cleaning and relamping.
3. Provide support for luminaire without causing deflection of ceiling or wall.
4. Luminaire mounting devices shall be capable of supporting a horizontal force of 100 percent of luminaire weight and vertical force of 400 percent of luminaire weight.

E. Flush-Mounted Luminaire Support:

1. Secured to outlet box.
2. Attached to ceiling structural members at four points equally spaced around circumference of luminaire.
3. Trim ring flush with finished surface.

F. Wall-Mounted Luminaire Support:

1. Attached to structural members in walls.
2. Do not attach luminaires directly to gypsum board.

G. Ceiling-Mounted Luminaire Support:

1. Ceiling mount with two 5/32-inch- diameter aircraft cable supports adjustable to 120 inches in length.
2. Ceiling mount with pendant mount
3. Ceiling mount with hook mount.

H. Suspended Luminaire Support:

1. Pendants and Rods: Where longer than 48 inches, brace to limit swinging.
2. Stem-Mounted, Single-Unit Luminaires: Suspend with twin-stem hangers. Support with approved outlet box and accessories that hold stem and provide damping of luminaire oscillations. Support outlet box vertically to building structure using approved devices.
3. Continuous Rows of Luminaires: Use tubing or stem for wiring at one point and wire support for suspension for each unit length of luminaire chassis, including one at each end.
4. Do not use ceiling grid as support for pendant luminaires. Connect support wires or rods to building structure.

I. Ceiling-Grid-Mounted Luminaires:

1. Secure to any required outlet box.
2. Secure luminaire to the luminaire opening using approved fasteners in a minimum of four locations, spaced near corners of luminaire.
3. Use approved devices and support components to connect luminaire to ceiling grid and building structure in a minimum of four locations, spaced near corners of luminaire.

J. Comply with requirements in Section 26 0519 "Low-Voltage Electrical Power Conductors and Cables" for wiring connections.

3.4 IDENTIFICATION

A. Identify system components, wiring, cabling, and terminals. Comply with requirements for identification specified in Section 26 0553 "Identification for Electrical Systems."

3.5 FIELD QUALITY CONTROL

A. Perform the following tests and inspections:

1. Operational Test: After installing luminaires, switches, and accessories, and after electrical circuitry has been energized, test units to confirm proper operation.
2. Test for Emergency Lighting: Interrupt power supply to demonstrate proper operation. Verify transfer from normal power to battery power and retransfer to normal.

B. Luminaire will be considered defective if it does not pass operation tests and inspections.

C. Prepare test and inspection reports.

3.6 STARTUP SERVICE

A. Comply with requirements for startup specified in Section 26 0943.16 "Addressable-Luminaire Lighting Controls."

B. Comply with requirements for startup specified in Section 26 0943.23 "Relay-Based Lighting Controls."

3.7 ADJUSTING

A. Occupancy Adjustments: When requested within 12 months of date of Substantial Completion, provide on-site assistance in adjusting the direction of aim of luminaires to suit occupied conditions. Make up to two visits to Project during other-than-normal hours for this purpose. Some of this work may be required during hours of darkness.

1. During adjustment visits, inspect all luminaires. Replace lamps or luminaires that are defective.
2. Parts and supplies shall be manufacturer's authorized replacement parts and supplies.
3. Adjust the aim of luminaires in the presence of the Architect.

END OF SECTION

SECTION 26 5619

LED EXTERIOR LIGHTING

PART 1 - GENERAL

1.1 RELATED DOCUMENTS

A. Drawings and general provisions of the Contract, including General and Supplementary Conditions and Division 01 Specification Sections, apply to this Section.

1.2 SUMMARY

A. Section Includes:

1. Exterior solid-state luminaires that are designed for and exclusively use LED lamp technology.
2. Luminaire supports.
3. Luminaire-mounted photoelectric relays.

B. Related Requirements:

1. Section 26 0923"Lighting Control Devices" for automatic control of lighting, including time switches, photoelectric relays, occupancy sensors, and multipole lighting relays and contactors.

1.3 DEFINITIONS

A. CCT: Correlated color temperature.

B. CRI: Color rendering index.

C. Fixture: See "Luminaire."

D. IP: International Protection or Ingress Protection Rating.

E. Lumen: Measured output of lamp and luminaire, or both.

F. Luminaire: Complete lighting unit, including lamp, reflector, and housing.

1.4 ACTION SUBMITTALS

A. Product Data: For each type of luminaire.

1. Arrange in order of luminaire designation.
2. Include data on features, accessories, and finishes.
3. Include physical description and dimensions of luminaire.
4. Lamps, include life, output (lumens, CCT, and CRI), and energy-efficiency data.

5. Photometric data and adjustment factors based on laboratory tests, complying with IES Lighting Measurements Testing and Calculation Guides, of each luminaire type. The adjustment factors shall be for lamps and accessories identical to those indicated for the luminaire as applied in this Project IES LM-79 IES LM-80.

    a. Manufacturer's Certified Data: Photometric data certified by manufacturer's laboratory with a current accreditation under the NVLAP for Energy Efficient Lighting Products.
    b. Testing Agency Certified Data: For indicated luminaires, photometric data certified by a qualified independent testing agency. Photometric data for remaining luminaires shall be certified by manufacturer.

6. Wiring diagrams for power, control, and signal wiring.
7. Photoelectric relays.
8. Means of attaching luminaires to supports and indication that the attachment is suitable for components involved.

B. Shop Drawings: For nonstandard or custom luminaires.

1. Include plans, elevations, sections, and mounting and attachment details.
2. Include details of luminaire assemblies. Indicate dimensions, weights, loads, required clearances, method of field assembly, components, and location and size of each field connection.
3. Include diagrams for power, signal, and control wiring.

C. Samples: For each luminaire and for each color and texture indicated with factory-applied finish.

D. Product Schedule: For luminaires and lamps. Use same designations indicated on Drawings.

E. Delegated-Design Submittal: For luminaire supports.

1. Include design calculations for luminaire supports and seismic restraints.

1.5 INFORMATIONAL SUBMITTALS

A. Coordination Drawings: Plans, drawn to scale, on which the following items are shown and coordinated with each other, using input from installers of the items involved:

1. Luminaires.
2. Structural members to which **equipment and** luminaires will be attached.
3. Underground utilities and structures.
4. Existing underground utilities and structures.
5. Above-grade utilities and structures.
6. Existing above-grade utilities and structures.
7. Building features.
8. Vertical and horizontal information.

B. Qualification Data: For testing laboratory providing photometric data for luminaires.

C. Seismic Qualification Data: For luminaires, accessories, and components, from manufacturer.

1. Basis for Certification: Indicate whether withstand certification is based on actual test of assembled components or on calculation.

2. Dimensioned Outline Drawings of Equipment Unit: Identify center of gravity and locate and describe mounting and anchorage provisions.
3. Detailed description of equipment anchorage devices on which the certification is based and their installation requirements.

D. Product Certificates: For each type of the following:

1. Luminaire.
2. Photoelectric relay.

E. Product Test Reports: For each luminaire, for tests performed by a qualified testing agency.

F. Source quality-control reports.

G. Sample warranty.

1.6 CLOSEOUT SUBMITTALS

A. Operation and Maintenance Data: For luminaires and photoelectric relays to include in operation and maintenance manuals.

1. Provide a list of all lamp types used on Project. Use ANSI and manufacturers' codes.
2. Provide a list of all photoelectric relay types used on Project; use manufacturers' codes.

1.7 MAINTENANCE MATERIAL SUBMITTALS

A. Furnish extra materials that match products installed and that are packaged with protective covering for storage and identified with labels describing contents.

1. Lamps: **Ten for every 100** of each type and rating installed. Furnish at least one of each type.
2. Glass, Acrylic, and Plastic Lenses, Covers, and Other Optical Parts: One for every 100 of each type and rating installed. Furnish at least one of each type.
3. Diffusers and Lenses: One for every 100 of each type and rating installed. Furnish at least one of each type.
4. Globes and Guards: One for every 20 of each type and rating installed. Furnish at least one of each type.

1.8 QUALITY ASSURANCE

A. Luminaire Photometric Data Testing Laboratory Qualifications: Luminaire manufacturers' laboratory that is accredited under the NVLAP for Energy Efficient Lighting Products.

B. Luminaire Photometric Data Testing Laboratory Qualifications: Provided by an independent agency, with the experience and capability to conduct the testing indicated, that is an NRTL as defined by OSHA in 29 CFR 1910.7, accredited under the NVLAP for Energy Efficient Lighting Products and complying with applicable IES testing standards.

C. Provide luminaires from a single manufacturer for each luminaire type.

D. Each luminaire type shall be binned within a three-step MacAdam Ellipse to ensure color consistency among luminaires.

E. Installer Qualifications: An authorized representative who is trained and approved by manufacturer.

F. Mockups: For exterior luminaires, complete with power and control connections.

1. Obtain Architect's approval of luminaires in mockups before starting installations.
2. Maintain mockups during construction in an undisturbed condition as a standard for judging the completed work.
3. Approval of mockups does not constitute approval of deviations from the Contract Documents contained in mockups unless Architect specifically approves such deviations in writing.
4. Subject to compliance with requirements, approved mockups may become part of the completed Work if undisturbed at time of Substantial Completion.

1.9 DELIVERY, STORAGE, AND HANDLING

A. Protect finishes of exposed surfaces by applying a strippable, temporary protective covering prior to shipping.

1.10 FIELD CONDITIONS

A. Verify existing and proposed utility structures prior to the start of work associated with luminaire installation.

B. Mark locations of exterior luminaires for approval by Architect prior to the start of luminaire installation.

1.11 WARRANTY

A. Warranty: Manufacturer and Installer agree to repair or replace components of luminaires that fail in materials or workmanship within specified warranty period.

1. Failures include, but are not limited to, the following:

a. Structural failures, including luminaire support components.
b. Faulty operation of luminaires and accessories.
c. Deterioration of metals, metal finishes, and other materials beyond normal weathering.

2. Warranty Period: **5** year(s) from date of Substantial Completion.

PART 2 - PRODUCTS

2.1 PERFORMANCE REQUIREMENTS

A. Seismic Performance: Luminaires shall withstand the effects of earthquake motions determined according to **ASCE/SEI 7**.

B. Seismic Performance: Luminaires and lamps shall be labeled vibration and shock resistant.

1. The term "withstand" means "the luminaire will remain in place without separation of any parts when subjected to the seismic forces specified and the luminaire will be fully operational during and after the seismic event."

2.2 LUMINAIRE REQUIREMENTS

A. Electrical Components, Devices, and Accessories: Listed and labeled as defined in NFPA 70, by a qualified testing agency, and marked for intended location and application.

B. NRTL Compliance: Luminaires shall be listed and labeled for indicated class and division of hazard by an NRTL.

C. FM Global Compliance: Luminaires for hazardous locations shall be listed and labeled for indicated class and division of hazard by FM Global.

D. UL Compliance: Comply with UL 1598 and listed for wet location.

E. Lamp base complying with ANSI C81.61 or IEC 60061-1.

F. Bulb shape complying with ANSI C79.1.

G. CRI of 80. CCT as specified on drawings.

H. L70 lamp life of 50,000 hours.

I. Lamps dimmable from 100 percent to 0 percent of maximum light output.

J. Internal driver.

K. Nominal Operating Voltage: 120 V ac or 208 V ac.

L. Lamp Rating: Lamp marked for **outdoor use and** i**n enclosed locations**.

M. Source Limitations: Obtain luminaires from single source from a single manufacturer.

N. Source Limitations: For luminaires, obtain each color, grade, finish, type, and variety of luminaire from single source with resources to provide products of consistent quality in appearance and physical properties.

2.3 LUMINAIRE-MOUNTED PHOTOELECTRIC RELAYS

A. Comply with UL 773 or UL 773A.

B. Contact Relays: Factory mounted, single throw, designed to fail in the on position, and factory set to turn light unit on at 1.5 to 3 fc and off at 4.5 to 10 fc with 15-second minimum time delay.

1. Relay with locking-type receptacle shall comply with ANSI C136.10.
2. Adjustable window slide for adjusting on-off set points.

2.4 MATERIALS

A. Metal Parts: Free of burrs and sharp corners and edges.

B. Sheet Metal Components: Corrosion-resistant aluminum. Form and support to prevent warping and sagging.

C. Doors, Frames, and Other Internal Access: Smooth operating, free of light leakage under operating conditions, and designed to permit relamping without use of tools. Designed to prevent doors, frames, lenses, diffusers, and other components from falling accidentally during relamping and when secured in operating position. Doors shall be removable for cleaning or replacing lenses.

D. Diffusers and Globes:

1. Acrylic Diffusers: 100 percent virgin acrylic plastic, with high resistance to yellowing and other changes due to aging, exposure to heat, and UV radiation.
2. Glass: Annealed crystal glass unless otherwise indicated.
3. Lens Thickness: At least 0.125 inch minimum unless otherwise indicated.

E. Lens and Refractor Gaskets: Use heat- and aging-resistant resilient gaskets to seal and cushion lenses and refractors in luminaire doors.

F. Reflecting surfaces shall have minimum reflectance as follows unless otherwise indicated:

1. White Surfaces: 85 percent.
2. Specular Surfaces: 83 percent.
3. Diffusing Specular Surfaces: 75 percent.

G. Housings:

1. Rigidly formed, weather- and light-tight enclosure that will not warp, sag, or deform in use.
2. Provide filter/breather for enclosed luminaires.

H. Factory-Applied Labels: Comply with UL 1598. Include recommended lamps. Labels shall be located where they will be readily visible to service personnel, but not seen from normal viewing angles when lamps are in place.

1. Label shall include the following lamp characteristics:

a. "USE ONLY" and include specific lamp type.
b. Lamp diameter, shape, size, wattage and coating.
c. CCT and CRI for all luminaires.

2.5 FINISHES

A. Variations in Finishes: Noticeable variations in same piece are unacceptable. Variations in appearance of adjoining components are acceptable if they are within the range of approved Samples and are assembled or installed to minimize contrast.

B. Luminaire Finish: Manufacturer's standard paint applied to factory-assembled and -tested luminaire before shipping. Where indicated, match finish process and color of pole or support materials.

C. Factory-Applied Finish for Aluminum Luminaires: Comply with NAAMM's "Metal Finishes Manual for Architectural and Metal Products" for recommendations for applying and designating finishes.

1. Finish designations prefixed by AA comply with the system established by the Aluminum Association for designating aluminum finishes.
2. Natural Satin Finish: Provide fine, directional, medium satin polish (AA-M32); buff complying with AA-M20 requirements; and seal aluminum surfaces with clear, hard-coat wax.
3. Class I, Clear-Anodic Finish: AA-M32C22A41 (Mechanical Finish: Medium satin; Chemical Finish: Etched, medium matte; Anodic Coating: Architectural Class I, clear coating 0.018 mm or thicker) complying with AAMA 611.
4. Class I, Color-Anodic Finish: AA-M32C22A42/A44 (Mechanical Finish: Medium satin; Chemical Finish: Etched, medium matte; Anodic Coating: Architectural Class I, integrally colored or electrolytically deposited color coating 0.018 mm or thicker), complying with AAMA 611.

    a. Color: Verify with Architect.

D. Factory-Applied Finish for Steel Luminaires: Comply with NAAMM's "Metal Finishes Manual for Architectural and Metal Products" for recommendations for applying and designating finishes.

1. Surface Preparation: Clean surfaces to comply with SSPC-SP 1, to remove dirt, oil, grease, and other contaminants that could impair paint bond. Grind welds and polish surfaces to a smooth, even finish. Remove mill scale and rust, if present, from uncoated steel, complying with SSPC-SP 5/NACE No. 1 or SSPC-SP 8.
2. Exterior Surfaces: Manufacturer's standard finish consisting of one or more coats of primer and two finish coats of high-gloss, high-build polyurethane enamel.

    a. Color: As selected from manufacturer's standard catalog of colors.
    b. Color: Match Architect's sample of **manufacturer's standard** or **custom** color.
    c. Color: As selected by Architect from manufacturer's full range.

2.6 LUMINAIRE SUPPORT COMPONENTS

A. Comply with requirements in Section 26 0529 "Hangers and Supports for Electrical Systems" for channel and angle iron supports and nonmetallic channel and angle supports.

PART 3 - EXECUTION

3.1 EXAMINATION

A. Examine substrates, areas, and conditions, with Installer present, for compliance with requirements for installation tolerances and other conditions affecting performance of the Work.

B. Examine roughing-in for luminaire electrical conduit to verify actual locations of conduit connections before luminaire installation.

C. Examine walls, roofs, and canopy ceilings and overhang ceilings for suitable conditions where luminaires will be installed.

D. Proceed with installation only after unsatisfactory conditions have been corrected.

3.2 TEMPORARY LIGHTING

A. If approved by the Architect, use selected permanent luminaires for temporary lighting. When construction is substantially complete, clean luminaires used for temporary lighting and install new lamps.

3.3 GENERAL INSTALLATION REQUIREMENTS

A. Comply with NECA 1.

B. Use fastening methods and materials selected to resist seismic forces defined for the application and approved by manufacturer.

C. Install lamps in each luminaire.

D. Fasten luminaire to structural support.

E. Supports:

1. Sized and rated for luminaire weight.
2. Able to maintain luminaire position after cleaning and relamping.
3. Support luminaires without causing deflection of finished surface.
4. Luminaire-mounting devices shall be capable of supporting a horizontal force of 100 percent of luminaire weight and a vertical force of 400 percent of luminaire weight.

F. Wall-Mounted Luminaire Support:

1. Attached to structural members in walls.

G. Wiring Method: Install cables in raceways. Conceal raceways and cables.

H. Install luminaires level, plumb, and square with finished grade unless otherwise indicated. Install luminaires at height and aiming angle as indicated on Drawings.

I. Coordinate layout and installation of luminaires with other construction.

J. Adjust luminaires that require field adjustment or aiming. Include adjustment of photoelectric device to prevent false operation of relay by artificial light sources, favoring a north orientation.

K. Comply with requirements in Section 26 0519 "Low-Voltage Electrical Power Conductors and Cables" and Section 26 0533 "Raceways and Boxes for Electrical Systems" for wiring connections and wiring methods.

3.4 BOLLARD LUMINAIRE INSTALLATION:

A. Align units for optimum directional alignment of light distribution.

1. Install on concrete base with top 4 inches above finished grade or surface at luminaire location. Cast conduit into base, and shape base to match shape of bollard base. Finish by troweling and rubbing smooth. Concrete materials, installation, and finishing are specified in Section 03 3000 "Cast-in-Place Concrete."

3.5 INSTALLATION OF INDIVIDUAL GROUND-MOUNTED LUMINAIRES

A. Aim as indicated on Drawings.

B. Install on concrete base with top 4 inches above finished grade or surface at luminaire location. Cast conduit into base, and finish by troweling and rubbing smooth. Concrete materials, installation, and finishing are specified in Section 03 3000 "Cast-in-Place Concrete."

3.6 CORROSION PREVENTION

A. Aluminum: Do not use in contact with earth or concrete. When in direct contact with a dissimilar metal, protect aluminum by insulating fittings or treatment.

B. Steel Conduits: Comply with Section 26 0533 "Raceways and Boxes for Electrical Systems." In concrete foundations, wrap conduit with 0.010-inch- thick, pipe-wrapping plastic tape applied with a 50 percent overlap.

3.7 IDENTIFICATION

A. Identify system components, wiring, cabling, and terminals. Comply with requirements for identification specified in Section 26 0553 "Identification for Electrical Systems."

3.8 FIELD QUALITY CONTROL

A. Inspect each installed luminaire for damage. Replace damaged luminaires and components.

B. Perform the following tests and inspections:

1. Operational Test: After installing luminaires, switches, and accessories, and after electrical circuitry has been energized, test units to confirm proper operation.
2. Verify operation of photoelectric controls.

C. Illumination Tests:

1. Measure light intensities at night. Use photometers with calibration referenced to NIST standards. Comply with the following IES testing guide(s):

    a. IES LM-5.
    b. IES LM-50.
    c. IES LM-52.
    d. IES LM-64.
    e. IES LM-72.

2. Operational Test: After installing luminaires, switches, and accessories, and after electrical circuitry has been energized, test units to confirm proper operation.

D. Luminaire will be considered defective if it does not pass tests and inspections.

E. Prepare a written report of tests, inspections, observations, and verifications indicating and interpreting results. If adjustments are made to lighting system, retest to demonstrate compliance with standards.

3.9 DEMONSTRATION

A. Train Owner's maintenance personnel to adjust, operate, and maintain luminaires and photocell relays.

3.10 ADJUSTING

A. Occupancy Adjustments: When requested within 12 months of date of Substantial Completion, provide on-site assistance in adjusting the direction of aim of luminaires to suit occupied conditions. Make up to two visits to Project during other-than-normal hours for this purpose. Some of this work may be required during hours of darkness.

1. During adjustment visits, inspect all luminaires. Replace lamps or luminaires that are defective.
2. Parts and supplies shall be manufacturer's authorized replacement parts and supplies.
3. Adjust the aim of luminaires in the presence of the Architect.

END OF SECTION

Cherokee Nation Information Technology

Network Construction Standards and Requirements

INTRODUCTION

The following Network Construction Standards and Requirements pertain to the requirements of the Cherokee Nation Information Technology Network Section. All preceding documentation is superseded by this document and shall be used until replaced.

This is our requirements that we require to be followed when designing, constructing, or refurbishing any building that requires a network to be installed or upgraded. If there are any questions please contact Cherokee Nation Information Technology Network Group.

PART 1 – GENERAL

1) SECTION REQUIREMENTS
   a) Summary: Furnish and install complete with all accessories a Structured Cabling System (SCS). The SCS shall serve as a vehicle for transport of data, video and voice telephony signals throughout the network from designated demarcation points to outlets located at various desks, workstation and other locations as indicated on the contract drawings and described herein.
   b) Submittals
      i) Product Data
         (1) Owner is providing a list of standard parts required for the contract. Any additional parts used the vendor/contractor will provide manufacture's catalog information showing dimensions, colors and configurations.
         (2) Submittals shall include all items called for in PART 2 – PRODUCTS of this document and the manufacturers cut sheets for the following:
            (a) All balanced twisted pair cable.
            (b) All connectors and required tooling.
            (c) All termination system components for each cable type.
            (d) All test equipment to be used for balanced twisted pair channels.
         (3) A Performance Specification showing manufacturer's Guaranteed Published Channel Performance over the full swept frequency range.
         (4) Technical data sheets shall include the physical specifications as well as the following electrical and transmission characteristics for balanced twisted pair channels:
            (a) Mutual Capacitance
            (b) Characteristic Impedance
            (c) DC Resistance
            (d) Insertion Loss (IL)
            (e) Pair-to-Pair Near End Crosstalk (NEXT)
            (f) Power Sum Near End Crosstalk (PSNEXT)
            (g) ELFEXT (ELFEXT)
            (h) Power Sum ELFEXT (PSELFEXT)
            (i) Return Loss (RL)
            (j) Propagation delay
            (k) Delay Skew
      ii) Samples
         (1) Prior to installation, samples of cable and components shall be provided to the Owner, its

Consultants and Construction Manager for evaluation prior to Installation

(a) Submit samples of each type of cable

(i) Three (3) 24" long samples of each type of cable, copper (6e & 6a) and fiber (SM & MM). For the copper, the sample cannot be from the same box/reel. Must take from three separate boxes/reels.

(ii) Three (3) samples of each connector.

(iii) One each 100ft terminated copper of the 6e & 6a cable in a bag for test reference and permanent storage in the Main Closet. Each should start at the lowest footage mark.

iii) Manufacturer's Instructions

(1) Indicate application conditions and limitations of use stipulated by product testing agency specified under regulatory requirements.

(2) Include instructions for storage, handling, protection, examination, preparation, operation and installation of product.

iv) Material Guarantee

(1) The wiring vendor/contractor (installer) shall guarantee at the time of the bid that all Category 6A and 6E cabling and components meet or exceed specifications (including installation) as referenced in 1.2.

(2) The successful wiring vendor/contractor (installer) will insure that all correct parts are ordered per Products Section of this document and installed in accordance with manufacturers design and installation guidelines. Vendor/contractor shall submit complete parts and part numbers to the Construction Manager prior to installation of equipment.

(3) Test Fiber optic cables upon receipt at Project site:

(a) Test optical fiber cable to determine the continuity of the strand end to end. Use optical loss test set.

(b) Test optical fiber cable while on reels. Use an optical time domain reflectometer to verify the cable length and locate cable defects, splices, and connector, including the loss value of each. Retain test data and include the record in final documentation.

v) Quality Assurance

(1) For Cat 6a and 6e copper and Fiber optic the following will be provided:

(a) System:

(i) The successful Bidder shall warrant that all materials and equipment furnished within the channel, under the contract are new, in good working order, free from defects, and in conformance with the Structured Cabling SYSTEM specifications. All installed equipment must conform to the manufacturer's official published specifications. The warranty shall begin at the Structured Cabling System acceptance date and remain in effect for a period of twenty-five year from that date. The successful Bidder shall agree to repair, adjust, and/or replace (as determined by the Purchaser to be in its best interest) any defective equipment, materials, or other parts of the Structured Cabling System at the successful Bidder's sole cost. The Purchaser will incur no costs for service or replacement of parts within the channel during the warranty period of 25 years.

(ii) Selected vendor must provide a Structured Cabling System warranty for a minimum of 25 years. The Structured Cabling System warranty must guarantee the electrical performance to meet or exceed the requirements as outlined in documents TIA/EIA 568A and ISO DIS 11801 and offer a twenty five (25) year warranty within the Structured Cabling SYSTEM Channel, beginning at acceptance by the Purchaser. The warranty must include complete parts and labor replacement of defective products. The products must be warranted for a minimum of 20 years by the manufacturer. The Structured Cabling System warranty must have provisions for replacing the contracting

organization at no cost to the customer should the contractor lose his status as an authorized installer or otherwise not fulfill his obligation to the customer as outlined in the Structured Cabling System warranty program.

(iii) The successful Bidder shall warrant and supply evidence that the installation of materials and hardware will be made in strict compliance with all applicable provisions of the National Electric Code, the rules and regulations of the Federal Communications Commission, and state and/or local codes or ordinances that may apply.

(b) Application:

(i) Minimum twenty (20) year application assurance: The application assurance shall cover the failure of the wiring system to support the application which it was designed to support, as well as additional application(s) introduced in the future for a minimum twenty (20) year period.

vi) Certifications

(1) The successful vendor/contractor shall meet the current year Panduit Business Partner Agreement – Panduit Certified Installer (and/or Addendum), and shall provide a copy of the PCI certificate before awarding contract.

(2) A copy of certification not less than 6 months from expiration for the vendors/installer Panduit Certified Copper and Fiber Technicians (PCT) shall be submitted upon awarding of contract before first cable is pulled and or installed.

(3) If the successful vendor/contractor subcontracts the job (and so on), then each awarded vendor/installer shall comply with the same certifications as above.

2) STANDARDS AND CODE COMPLIANCE REFERENCES

a) The following industry standards are the basis for the structured cabling system described in this document:

i) TIA/EIA

(1) ANSI/TIA-568-C.0, Generic Telecommunications Cabling for Customer Premises, February 2009

(2) ANSI/TIA-568-C.1, Commercial Building Telecommunications Cabling Standard, February 2009

(3) ANSI/TIA-568-C.2, Balanced Twisted-Pair Telecommunications Cabling and Components

(4) Standards, August 2009

(5) ANSI/TIA-568-C.3, Optical Fiber Cabling Components Standard, June 2008.

(6) TIA/EIA569A Commercial Building Standard for Telecom Pathways and Spaces

(7) TIA/EIA606 Administration Standard for the Telecommunications Infrastructure of Commercial Buildings

(8) TIA/EIA607 Commercial Building Grounding/Bonding Requirements

(9) TIA/EIA942 Telecommunications Infrastructure Standard for Data Centers

(10) IEEE Std 802.3(tm)-2008 Part 3: Carrier sense multiple access with collision detection (CSMA/CD) access method and physical layer specifications.

(1) IEEE Std 802.3(tm)-2008 Part 3: Carrier sense multiple access with collision detection (CSMA/CD) access method and physical layer specifications. IEEE 802.3bc-2009, Part 3: Carrier Sense Multiple Access with Collision Detection (CSMA/CD) Access Method and Physical Layer Specifications. Amendment 2: Ethernet Organizationally Specific Type, Length, Value (TLVs).

ii) NFPA70 National Electric Code (NEC) 2005

iii) ISO/IEC· ISO/IEC 11801 Generic Cabling for Customer Premises

iv) BICSI ITSIM, Chapter. 4, "Pulling Cable."

3) ADDITIONAL SUPPPORT
   a) Cherokee Nation Information Technology Network Construction Standards and Requirements – this document.
   b) Notes, drawings and instructions from Owner as needed.
   c) Panduit Certification PLUSSM System Warranty Program, Panduit Warranty Guide.
   d) Successful vendor/contractor is invited to review an existing network to see how Owner would like to see how the network should look upon completion.

4) The most recent versions of all documents apply to this project. If there is a conflict between applicable documents, the order above (section 2 and 3) shall dictate the order of precedence in resolving the issue unless an enforceable local or national code is in effect.

PART 2 – PRODUCTS

1) SYSTEM REQUIREMEMNTS
   a) Expansion Capability: Provide spare conductor pairs in telecommunication cables, positions in cross-connect and patch panels, terminal strips to accommodate 20 percent future increase in the number of workstations shown on Drawings. All components and cabling shall be capable of 10G Bandwidth speed throughout the entire system.

2) CABLE TRAY
   a) Installation:
      i) Cable tray will be the Chatsworth part no. 10250-718, {Standard length is *9'11-1/2"}*. Cable Tray shall be installed with side stringers facing up so that the ladder forms a U-shape.
      ii) Cable Tray shall be secured to the structural ceiling, building truss system, wall, floor or the tops of equipment racks and/or cabinets using the manufacturer's recommended supports and appropriate installation hardware and methods as defined by local code or the authority having jurisdiction (AHJ). Cable Tray shall be supported every 5' or less in accordance with TIA-569-B. Cable Tray shall be supported within 2' of every splice and within 2' on both/all sides of every intersection. Support Cable Tray within 2' on both sides of every change in elevation. Cable tray support will use the Threaded Ceiling kit (11310-003) or a combination of Runway Support Bracket (11408-003) with 5/8 All-Thread Rod on the outside, Ceiling Support Bracket (11406- 002), Threaded Rod I-Beam Clamps (10557-003), or appropriate hex nuts, split lock washers and plain washers through the bottom chord of the joists. Cable Tray splices will be made in mid-span, not over a support, with the manufacturer's recommended splice hardware.
      iii) Cable Tray shall be installed with a minimum clearance of 12" above the Cable Tray. Leave a minimum of 12" in between Cable Tray and ceiling/building truss structure. When located above an acoustical drop ceiling, leave a minimum of 3" clearance between the top of the drop ceiling tiles and the bottom of the Cable Tray.
      iv) Connections between tray sections shall be with the Butt-Splice kit (11301-001). If a redirection of up or down is required to go over or under utilities, use the Butt Swivel Splice kit (1 0487 -001). For the up or down movement of tray do not exceed more than 30 degrees so the cable will lie on the tray. **The use of cut up tray sections/pieces on joints shall not be used. Manufacture parts shall be used.**
      v) Intersections (T or X shaped) shall be made using the Junction Splice Kit (11308-001), with Cable Runway Corner Bracket (11595-715) added to create a radius for the cable to lay on when making turns. For an L-turn use the Cable Runway E-Bend (10822-709).
      vi) The cable tray is offset the length of the room to accommodate the rack, for all the cable to come off the track within 4 feet of the left hand wall when standing in the doorway.

vii) Cover the exposed ends of cable runway that do not terminate against a wall or the ceiling with Protective End Caps (10643-001) or an End Closing Kit (11700-709).

viii) The installer will provide touch-up paint color-matched to the finish on the Cable Tray and will correct any minor cosmetic damage (chips, small scratches, etc.) resulting from normal handling during the installation process prior to delivery to the owner. If a component is cosmetically damaged to the extent that correction in the field is obvious against the factory finish, the component will be replaced with a new component finished from the factory. If a component is physically damaged due to mishandling or modification during the installation process, it shall not be used as part of the Cable Tray system. Paint listed in parts list.

b) Grounding

i) Grounding will be in accordance with the Commercial Building Grounding (Earthing) and Bonding Requirements for Telecommunications J-STD-607 -A. Within the telecommunications room/s and throughout the building, the Cable Tray shall be bonded together, electrically continuous, and bonded to the TGB. Cable Tray and turns shall be bonded across each splice with a bonding kit (40164-001 or 025). Cable Tray shall be bonded to the Telecommunications Grounding Buss bar (TGB) using an approved ground lug on the Cable Tray and a minimum #6 grounding wire. Remove paint from the Cable Tray where bonding/ground lugs contact the Cable Tray so that the lug will contact bare metal. Use antioxidant joint compound in between the bare metal on the Cable Tray and ground lug. Use antioxidant joint compound in between the bus bar and the ground lug. Verify continuity through the bonds at splices and intersections between individual Cable Tray sections and turns and through the bond to the TGB.

ii) **The use of cut up tray sections/pieces on joints shall not be used as a grounding bond between the joints**.

3) IT ROOM

a) Server room shall be Air Conditioned with a separate unit on a separate thermostat.

b) The HVAC shall be provided on a 24 hours-per-day, 365 days-per year basis. If a standby power source is available in the building, consideration should be given to connecting the HVAC system serving the telecommunications equipment room to the standby supply.

c) The temperature and humidity shall be controlled to provide continuous operating ranges of 18deg C (64deg F) to 24 "C (75deg F) with 30% to 55% relative humidity. Humidification and dehumidification equipment may be required depending upon local environmental conditions

d) A positive air pressure differential with respect to surrounding areas should be provided.

e) Need 120v power receptacles on all walls with dedicated circuits. The rack vertical management will have twist lock and quad receptacles as request by the owner and Drawings.

f) Wall - 3/4" void free A-C grade (or better) plywood with 2 coats of fire retardant paint.

g) Equipment not related to the support of the equipment room (e.g., piping, ductwork, pneumatic tubing, etc.) shall not be installed in; pass through, or enter the equipment room.

4) MOUNTING ELEMENTS

a) Use the following charts to reference which equipment will be used.

Chart 1

Line item	P/N	Description	Qty
1	4220W	Dell 42U enclosure, wide (4220W): 750mm wide x 1070mm deep	
2	PRV15	Panduit Vertical Cable manager	
3	CMR4P84	Panduit 4-Post rack	
4	PRD15	Panduit Dual hinged door	

5	PREP	Panduit End Panel	
6	RGRB19U	Panduit ground bar	
7	GB2B0312TPI-1	Panduit Telecommunications ground bar	
8	10250-724	Chatsworth Universal cable runway, Black – 24 Inch Wide	Reference
9	11301-702	Chatsworth Butt Splice Kit, 2" Stringer, Black	Reference
10	10724-724	Chatsworth Cable runway radius bend – 24inch Wide	Reference
11	11309-701	Chatsworth Foot kit, cable runway	Reference
12	11421-724	Chatsworth Wall angle support kit, cable runway – 24inch Wide	Reference
13	31470-712	Chatsworth Cable runway standoff support kit	Reference
14	10506-702	Chatsworth Cable runway elevation kit	Reference
15	11302-701	Chatsworth Junction-splice kit	Reference
16	10723-724	Chatsworth Cable runway radius bend	Reference
17	11959-724	Chatsworth Corner Bracket 24 inch Radius,	Reference
18	11746-724	Chatsworth Triangular Supports Bracket, steel	Reference

Chart 2

Line item	Qty	P/N	Description	Purpose	Notes
1		CJ6X88TGBU	Panduit Category 6A, RJ45, 10 Gb/s, 8-position, 8-wire universal module, Blue	Closet A Zone	
2		CJ6X88TGOR	Panduit Category 6A, RJ45, 10 Gb/s, 8-position, 8-wire universal module, Orange	Closet B Zone	
3		CJ6X88TGGR	Panduit Category 6A, RJ45, 10 Gb/s, 8-position, 8-wire universal module, Green	Closet C Zone	
4		CJ6X88TGRD	Panduit Category 6A, RJ45, 10 Gb/s, 8-position, 8-wire universal module, Red	Closet D Zone	
5		CJ6X88TGIW	Panduit Category 6A, RJ45, 10 Gb/s, 8-position, 8-wire universal module, Off White	Closet E Zone	
6		CJ688TGYL	Panduit Category 6, RJ45, 8-position, 8-wire universal module, Yellow	Camera Systems	
7		CJ688TGVL	Panduit Category 6, RJ45, 8-position, 8-wire universal module, Violet	Multimedia	
8		CJ6X88TGBU-24	Panduit Category 6A, RJ45, 10 Gb/s, 8-position, 8-wire universal module, Blue (24-Pk)	Closet A Zone	
9		CJ6X88TGOR-24	Panduit Category 6A, RJ45, 10 Gb/s, 8-position, 8-wire universal module, Orange (24-Pk)	Closet B Zone	
10		CJ6X88TGGR-24	Panduit Category 6A, RJ45, 10 Gb/s, 8-position, 8-wire universal module, Green (24-Pk)	Closet C Zone	
11		CJ6X88TGRD-24	Panduit Category 6A, RJ45, 10 Gb/s, 8-position, 8-wire universal module, Red (24-Pk)	Closet D Zone	
12		CJ6X88TGIG-24	Panduit Category 6A, RJ45, 10 Gb/s, 8-position, 8-wire universal module, Int Gray (24-Pk)	Closet E Zone	
13		CJ688TGYL-24	Panduit Category 6, RJ45, 8-position, 8-wire universal module, Yellow (24-Pk)	Camera Systems	
14		CJ688TGVL-24	Panduit Category 6, RJ45, 8-position, 8-wire universal module, Violet (24-Pk)	Multimedia	
15		PUR6004BU-UY	Panduit TX6000 Cat6 UTP riser copper cable	Camera Systems and Multimedia	
16	50	UTP6A7BU	Cat 6a 10Gb UTP patch cable, 7ft, Blue	Closet A network room connection	
17	70	UTP6A14BU	Cat 6a 10Gb UTP patch cable, 14ft, Blue	Closet A network room connection	
18	70	UTP6A20BU	Cat 6a 10Gb UTP patch cable, 7ft, Blue	Closet A network room connection	
19	70	UTP6A7OR	Cat 6a 10Gb UTP patch cable, 7ft, Orange	Closet B network room connection	
20	50	UTP6A7GR	Cat 6a 10Gb UTP patch cable, 7ft, Green	Closet C network room connection	
21	50	UTP6A7RD	Cat 6a 10Gb UTP patch cable, 7ft, Red	Closet D network room connection	
22	30	UTP6A7	Cat 6a 10Gb UTP patch cable, 7ft, Off White.	Closet E network room connection	
23	120	UTP6A5YL	Cat 6a 10Gb UTP patch cable, 5ft, Yellow	Security Cameras	
24	10	UTP6A3YL	Cat 6a 10Gb UTP patch cable, 3ft, Yellow	Security Cameras lamp posts	
25	30	UTP6A3VL	Cat 6a 10Gb UTP patch cable, 3ft, Violet	Multimedia	
26		Vendor specific	Panduit Mini-Com Snap -On Modular furniture faceplates	Modular Furniture	Check Panduit's catalog. Must have a label. Vendor specific faceplate.
27		CBIW	Panduit Single gang faceplate frame accepts two 1/2 size module inserts or three 1/3 size module inserts.	Multimedia plates	For other colors replace suffix IW (Off White) with EI (Electric Ivory), WH (White), IG (Int Gray) or BL (Black)
28		CHS2IW-X	Panduit Two module space, 1/2 size, sloped insert accepts two Mini-Com modules	Multimedia plates	For other colors replace suffix IW (Off White) with EI (Electric Ivory), WH (White), IG (Int Gray) or BL (Black)
29		CHB2IW-X	Panduit 1/2 Blank Insert	Multimedia plates	For other colors replace suffix IW (Off White) with EI (Electric Ivory), WH (White), IG (Int Gray) or BL (Black)
30		KWPY	Panduit Stainless steel phone plate	Wall phones	The cable is terminated and left in the wall box.
31		CFPL2IWY	Single gang, vertical faceplate accepts two Mini-Com modules	Network wall plates	For other colors replace suffix IW (Off White) with EI (Electric Ivory), WH (White), IG (Int Gray) or BL (Black)
32		CFPL3IWY	Single gang, vertical faceplate accepts three Mini-Com modules	Network wall plates	For other colors replace suffix IW (Off White) with EI (Electric Ivory), WH (White), IG (Int Gray) or BL (Black)
33		CFPL4IWY	Single gang, vertical faceplate accepts four Mini-Com modules	Network wall plates	For other colors replace suffix IW (Off White) with EI (Electric Ivory), WH (White), IG (Int Gray) or BL (Black)
31		CMBIW-X	Mini-Com blank module	Network wall plates	For other colors replace suffix IW (Off White) with EI (Electric Ivory), WH (White), IG (Int Gray) or BL (Black)
32		TTS-35RX0	Panduit Tak-Tape (10 PK)	All network binding	
33		FOOPRX24Y	Panduit Opti-Core 24-Fiber indoor interlocking armored cable	All Back bone	
34		EZDP44	Fire Barrier CBL Pathway Single EZ Path W/WPLT Series 44		
35		RGESD2-1	Panduit Two-hole ESD port with 5/8" hole spacing		
36		11310-003	Chatsworth Threaded Ceiling Kit, Cable Runway		

37		11421-712	Chatsworth Wall Angle Support Kit, Cable Runway		
38		10250-712	Chatsworth Universal Cable Runway – 12 inch wide		
39		10723-712	Chatsworth Cable Runway Radius Bend 90-Degree Outside Bend – 12 inch Wide		
40		10724-712	Chatsworth Cable Runway Radius Bend 90-Degree Inside Bend – 12 inch Wide		
41		11301-702	Chatsworth Butt-Splice Kit		
42		11298-701	Chatsworth Heavy Duty Junction-Splice Kit		
43		10642-001	Chatsworth Chatsworth Protective End Caps For Runway		
44		10622-010	Chatsworth Standard Busbar 4"Wx1/4"HxlO"L		
45		40164-001	Chatsworth #6AWG Ground Strap		
46		10250-718	Chatsworth Universal Cable Runway		
47		10723-718	Chatsworth Cable Runway Radius Bend 90 degree Outside Bend		
48		10724-718	Chatsworth Cable Runway Radius Bend 90 degree Inside Bend		
49		11421-718	Chatsworth Wall Angle Support Kit, Cable Runway		
50		11304-000	Chatsworth J-bolt Kit		
51		11301-001	Chatsworth Butt-Splice Kit		
52		10506-706	Chatsworth Cable Runway Elevation Kit 6"		
53		1201-701	Chatsworth Cable Runway Radius Drop Stringer		
54		12100-718	Chatsworth Cable Runway Radius Drop Cross Member		
55		JMDWB-1-X	Panduit Drop Wire brackets for J-hooks		
56		JMJH2-X20	Panduit J Hook		
57		FOPRX24Y	Panduit Opti-Core 24-Fiber 10gig indoor interlocking armored cable		
58		RGTBSG-C	Panduit Green thread-forming bonding screw, #12-24 x ½’ (pkg 100)		

5) UNSHIELDED TWISTED-PAIR CABLING
   a) Backbone Fiber Cable:
      i) Panduit Opti-Core 24-Fiber 10gig indoor interlocking armored cable, p/n FOPRX24Y
      ii) Comply with TIA/EIA 568-B.1 & 3, and 598-B
      iii) NFPA 70
   b) Horizontal Copper cable:
      i) For Security Cameras and Multimedia:
         (1) NO. 23 AWG, 100 ohm, four pair. Panduit PUR6004BU-UY
         (2) Comply with TIA/EIA-568-B.2 and ANSI/TIA-568-C.2, Category 6e
         (3) NFPA 70, types CMG and CMP
      ii) For Main Network:
         (1) NO. 23 AWG, 100 ohm, four pair. Panduit PUR6X04BU-UY
         (2) Comply with TIA/EIA-568-B.2 and ANSI/TIA-568-C.2, Category 6A
         (3) NFPA 70, types CMG and CMP

   c) Cable Connecting Hardware: Comply with TINEIA-568-B.2, IDC type, using modules designed for punch-down caps or tools.
      i) IDC Terminal Block Modules: Integral with connector bodies, including plugs and jacks where indicated.

   d) Cross-Connect Panel: Modular array of IDC terminal blocks arranged to terminate building cables and permit interconnection between cables.
      i) Number of Terminals per Field: One for each conductor in assigned cables plus 25 percent spare.
      ii) Number of Jacks per Field: One for each four-pair UTP cable indicated.
   e) Jacks and Jack Assemblies: As referenced in Charts 1 and 2.
   f) Patch Cords: Factory made, four pair cables, to length as stated in parts reference, matching color to closet zone as referenced in Charts 1 and 2.

6) MULTIUSER TELECOMMUNICATIONS OUTLET ASSEMBLY
   a) Modular unit suitable for terminating single or multiple horizontal cables in one central location, providing an intermediary point between telecommunications closet and workstation.
      i) NRTL listed as complying with UL 50 and UL 1863.
      ii) Number of Terminals per Field: One for each conductor in assigned cables.
      iii) Number of Connectors per Field:
         (1) One for each four-pair UTP cable indicated.
         (2) One for each four-pair conductor group of indicated cables, plus 25 percent spare positions.
   b) Mounting: Owner furnished Modular Walls and Furniture: As provide by modular furniture manufacturer. Reference Charts 1 and 2.

7) WORKSTATION OUTLETS
   a) Jacks: 100-ohm, balanced, twisted-pair connector; four-pair, modular, RJ-45. Comply with TIAIEIA-568-B.1.
   b) Workstation Outlets: Single, dual, triple or quad jack connecter mounted in a single or multi-gang faceplate as shown in the prints.
      i) Jacks will be the color of the Closet/ Zone they are in. See prints.
      ii) Faceplate: Flush; high impact plastic; color determined by Architect and or Owner. Part numbers listed in Part Reference.
      iii) Legend: Contractor printed labels showing Closet then cable number, i.e. A001, A002, B101, C125.

8) MULTIMEDIA OUTLET
   a) Jacks: 100-ohm, balanced, twisted-pair connector; four-pair, modular, RJ-45. Comply with TIAIEIA-

568-B.1.

b) Workstation Outlets: dual connecter mounted in a single faceplate as shown in the prints.
   i) Jacks will be the color of Violet. See Charts 1 and 2.
   ii) Faceplate: Flush; high impact plastic; color determined by Architect and or Owner. Part numbers listed in Charts 1 and 2 Part Reference.
c) Legend: Contractor printed labels showing Closet, M (for MultiMedia) then cable number, i.e. AM01.

9) SECURITY CAMERA OUTLETS
   a) Jacks: 100-ohm, balanced, twisted-pair connector; four-pair, modular, RJ-45. Comply with TIAIEIA-568-B.1.
   b) Workstation Outlets: dual connecter mounted in a single faceplate as shown in the prints.
      i) Jacks will be the color of Yellow. See Charts 1 and 2.
      ii) Legend: Contractor printed labels showing Closet, S (for Security) then cable number, i.e. AS01.
      iii) Outlets will be either in the following configurations according to drawings.
         (1) If internal wall mount then terminated jack will be placed in the box with a blank faceplate, flush; high impact plastic; color determined by Architect and or Owner.
         (2) If external wall mount then the terminated jack will be placed on or in the internal inside wall close to the camera mount in a single ganged box with:
            (a) Faceplate: Flush; high impact plastic; color determined by Architect and or Owner. Part numbers listed in Charts 1 and 2 Part Reference.
         (3) If ceiling mounted then the terminated jack will be place on top plate of the nearest wall in a single ganged box with:
            (a) Faceplate: Flush; high impact plastic; color determined by Architect and or Owner. Part numbers listed in Charts 1 and 2 Part Reference.

10) GROUNDING AND BONDING
   a) Materials: Comply with NFPA 70, TINEIA-607, and UL 467.
   b) Reference Charts for what type of hardware is to be used in each Closet.
   c) Reference Manufacturer instructions on what and how grounding should be done if not referenced in this section.
   d) Reference drawings for location of hardware on equipment racks.
   e) Reference Part 2, section 2b), Cable Tray Grounding.

11) IDENTIFICATION PRODUCTS
   a) Reference Steps 7-9 above for labeling legend.
   b) Adhesive-Backed Cable Labels: Use a label-making machine or printer to construct adhesive-backed label tabs from plastic or paper strips. Labels shall be over laminating type in order to protect type-face information with clear Mylar film. Handwritten labels are prohibited
   c) Four-pair UTP cable shall have labels affixed directly to cable jacket:
      i) Within 3 inches from jack all outlets listed in steps 8-10.
      ii) Within 6 from jack at patch panels
      iii) Within 6 from entry into blocks.
   d) Fiber Optic Cables:
      i) Shall have labels affixed to a label carrier that protects the cable and allows the re-positioning and rotation of the identification label.
      ii) Warning Label shall be affixed along the consistent distance apart identifying that the cable is an optical fiber.
   e) Wiring Block Labels: Cardboard-like strips or adhesive labels that slip inside or onto clear plastic designation strips or label holders located on protector panels and wiring blocks

f) Telecommunications Outlet (TO) Labels/Workstations: Use a label-making machine to construct label tabs from plastic or paper strips or adhesive labels. Handwritten labels are unacceptable

12) CONDUIT SIZING SCHEDULE

SCHEDULE 0 – Conduit Trade Size	SCHEDULE 1 - Max Number of Cables based upon allowable fill.			
	SCHEDULE 2 - Cable outside Diameter, mm (in), [a=Category 3, 6e] or [b=6A, 10Gig]			
	SCHEDULE 3 - 6.1 (2.4) [a]	SCHEDULE 4 - 7.9 (.31) [b]	SCHEDULE 5 - 9.4 (.37) [b]	SCHEDULE 6
SCHEDULE 7 - 27 (1 ")	SCHEDULE 8 - 4	SCHEDULE 9 - 2	SCHEDULE 10-2	SCHEDULE 11
SCHEDULE 12 - 35 (1-1/4")	SCHEDULE 13-5	SCHEDULE 14-4	SCHEDULE 15 - 3	SCHEDULE 16
SCHEDULE 17 - 41 (1-1/2")	SCHEDULE 18-6	SCHEDULE 19-4	SCHEDULE 20 - 4	SCHEDULE 21

13) CONDUIT RUNS

a) Conduits from any Telecommunication closet, cable tray, horizontal pathway is not allowed except in the following:
   i) Conduit can be from the TO to the top of the wall with a minimum of 4 inches exposed. Preferred is1 foot above the wall with 90 degree bend so that the cable repair margin can be Velcro wrapped into the bend of the conduit. All exposed ends of conduits will have a EMT screw connector with plastic bushing to protect the cable from nicks.
   ii) A 2-inch conduit is required to each wall-mounted box that supports a multi-user telecommunications outlet assembly (MUTOA). A MUTOA is a special type of telecommunications outlets that can support up to 12 voice/data jacks. It is suitable for use in locations where there is a cluster of machines where each one is within 15 feet from the MUTOA.
   iii) Flexible conduits such as metallic flexible conduit are not to be used as pathways for telecommunications cables to avoid sheath damage to the cables. Therefore, the use of flexible conduits as pathway for telecommunications cables must be avoided at all times.
   iv) Minimize the amount of turns/curve in the conduit from the top of wall to the gang box. If under a window or opening, reroute conduit to place straight down next to window or opening.

14) TELECOMMUNICATIONS EQUIPMENT ROOM (T-E-R)

a) A telecommunications equipment room (T-E-R) is where the entrance conduits terminate. It is usually located on the ground floor but may also be located in the basement. A T-E-R typically functions as the main cross-connect (MCC). It is the main telecommunications serving point for the building. It will contain telecommunications equipment, much of it mounted on 19" - 4 post racks. Cables will be spliced and terminated on the walls. It is important that the entrance conduits stub up in the T-E-R as close to a corner as possible.
b) When designing the T-E-R floor space1, allowance shall be made for non-uniform occupancy, throughout the building. The practice is to provide 0.07 m2 (0.75 ft') of equipment room space for every 10 m2 (100 ft') of work area space. The equipment room shall be designed to a minimum of 14 m2 (150 ft'). See section 8.2 of TIAIEIA-569 pg.72 for more information. In the case of smaller buildings see annex B.3 of the TIAIEIA-569.
c) In certain buildings, the T-E-R will be further designated as a Node Room. A Node Room is used as a

cabling hub not just for that building but for other buildings in that neighborhood of the campus. A Node Room requires additional space, air conditioning, and additional entrance conduits. It may require 30 amp outlets. In some cases, where a Node Rooms is designated in a building, a separate TR on the same floor as the Node Room may be required.

d) CN-NTD will advise FD&C and the architect in the initial planning stage if a Node Room has been designated, No water sprinklers may be installed in a Node Room. A separate fire suppression system, based on one of the approved replacements for Halon, must be installed in coordination with CN Risk Management

e) A Node Room will house PBX telephone switching equipment, large wet- or dry-cell batteries, routers for campus wide area network (WAN), related local area network (LAN) switches, optical fiber cross connects and optical communications gear. Hence, it should be located so that it is accessible for the delivery of large equipment throughout its useful life. It must be at least 10' from a potential source of EMI (motors, transformers, photocopying equipment, etc.).

15) TELECOMMUNICATIONS ROOMS (TRS)

a) TRs are smaller than T-E-Rs. They are the cabling hubs for floors within a building. They also contain network electronics, typically mounted in 19" - 4 post racks. See table 7.2-1 of TIAIEIA. 569 pg. 66 for more information.

16) ELEVATOR PHONES

a) Elevator phones are cabled to each elevator equipment room. There must be at least one TO in the elevator equipment room that is cabled to the Main telecom room. There must be a dedicated number of jacks on the TO so to accommodate all elevators in the building. Recommend that there be one phone block dedicated to Safety and Security to be easily identified.

PART 3 – EXECUTION

1) INSTALLATION STANDARDS

a) Reference Part 1 –General,
   i) Section 2) STANDARDS AND CODE COMPLIANCE REFERENCES
   ii) Section 3) ADDITIONAL SUPPPORT

b) The most recent versions of all documents apply to this project. If there is a conflict between applicable documents, the order above shall dictate the order of precedence in resolving the issue unless an enforceable local or national code is in effect.

2) APPLICATION OF MEDIA

a) Backbone Cable for Data Service: 10Gig 24 fiber cable for runs between equipment rooms and wiring closet and for runs between closets.

b) Backbone Cable for Multimedia Service: UTP Category 6e cable to be run from Closet “A” Multimedia panel to each of the other closet multimedia patch panels, i.e. A to B, A to C, A to D, A to E. The cable will be terminated as the last port on the patch panel, i.e 21, 22, 23, 24.

c) Backbone Cable for Telecommunications to run from Telecom Entrance Room to each closet, terminated at the Telecom patch panel, reference locations on drawings.

d) Horizontal Cable for Data Service: 10Gig UPT Category 6A cable for runs between wiring closets and workstation outlets.

e) Horizontal Cable for Security Cameras:
   i) UTP Category 6e cable for runs between wiring closets and equipment. Starting at port 1 on Security Camera patch panel.
   ii) Fiber Optic 6-fiber cable for runs from closet to lamp posts in parking lot. Terminating in fiber box.

f) Horizontal cable for Multimedia Service: UTP Category 6e cable for runs between wiring closets and equipment. Starting at port 1 on Multimedia patch panel.

3) WORKMANSHIP

a) Manufactured products, materials, equipment, and components shall be provided, conditioned, applied, installed, connected, and tested in accordance with the manufacturer's specifications and printed instructions.

b) The installation of all system components shall be carried out under the direction of qualified personnel. Appearance shall be considered as important as mechanical and electrical efficiency. Workmanship shall meet or exceed industry standards. All work shall be performed in a high quality manner and the overall appearance shall be clean, neat and orderly.

c) The vendor/contractor and subcontractor will have the following personnel on site during install:
   i) Supervisor for every 4 Panduit Certified Copper and Fiber Technicians (PCT)
      (1) If the supervisor is a PCT, the supervisor can also have up to a maximum of 4 non-certified PCT's.
   ii) A PCT can have up to a maximum of 4 non-certified PCT's.
   iii) If subcontracted, each supervisor is responsible to the primary site vendor/contractor.
      (1) Primary supervisor has no limit to subcontractor supervisor to manage.
      (2) Primary supervisor will then have an assistant supervisor who will supervise as follows:
         (a) If the assistant supervisor is a PCT, the supervisor can also have up to a maximum of 4 non-certified PCT's.

d) Inspection
   i) The Contractor must allow Owner, its Consultants, Construction Manager, CNIT, their agents and the manufacturer's agent to observe and evaluate workmanship and can have problems corrected or work halted until corrected.
   ii) On-going inspections shall be performed during construction by the project manager Owner, its Consultants, Construction Manager, CNIT their agents. All work shall be performed in a high quality manner and the overall appearance shall be clean, neat and orderly.

4) INSTALLATION

a) Comply with:
   i) Reference Part 1 –General,
   ii) Section 2) STANDARDS AND CODE COMPLIANCE REFERENCES
   iii) Section 3) ADDITIONAL SUPPPORT
   iv) The most recent versions of all documents apply to this project. If there is a conflict between applicable documents, the order above shall dictate the order of precedence in resolving the issue unless an enforceable local or national code is in effect.

b) Wiring Method: Install cables in raceway and cable tray except within consoles, cabinets, desks, and counters. Conceal raceway and wiring except in unfinished spaces. Cable trays shall be as standardized by CNIT using ladder type cable trays.

c) The path for the cable tray shall be clear of obstructions, such as HVAC ducts, large pipes and structural beams within the building. Use of enclosed tray and conduits is not allowed. Elevations of trays will be minimized as to not have a stair step effect. Where fire or smoke barriers are penetrated by the ladder tray, they shall be fire stopped to maintain the rating of the barrier. Alternatively, EZ- Path Systems may be used through the penetrations. The number of sleeves required depends on the number of cables and size of tray. Use 50% fill ratio to determine the number of sleeves. Two additional spare sleeves should be installed to accommodate future cable placement.

d) Place cable trays above drop ceilings in corridors. Do not place them above offices, patient/treatment rooms or inaccessible spaces. There must be at least 4 inches of vertical space between the suspended ceiling tile and the bottom of the cable tray; 12 inches of vertical clearance from the top of the cable tray

to the true ceiling; and 2' total side clearance (i.e. if the cable tray is wall mounted and there is no clearance on one side, then minimum clearance on the other side should be 2'.

e) It is desirable that the cable tray originates from the TR. If the TR is surrounded with smoke or fire rated walls then EZ-Path systems will be installed
f) Access ceiling panels must be installed at 5-foot interval if cable tray is passing through a hard or solid ceiling. The panels should be within 1-1/2 feet from the cable tray. They shall not be mounted directly underneath the cable tray. Trays shall not change level or change direction if placed above a hard or solid ceiling.
g) All metallic cable trays must be grounded but should not be used as grounding conductor for equipment.
h) Wiring Method: Install cables in raceway and cable tray except within consoles, cabinets, desks, and counters and except in accessible ceiling spaces and in gypsum board partitions where unenclosed wiring method may be used. Use UL-listed plenum cable in environmental air spaces, including plenum ceilings. Conceal raceway and cables except in unfinished spaces.
i) Wiring within Wiring Closets and Enclosures:
    i) Install 3/4" void free A-C grade (or better) plywood with 2 coats of fire retardant paint on walls of equipment rooms and wiring closet from floor to ceiling.
    ii) Mount patch panels, terminal strips, and other connecting hardware on floor-mounted racks. Reference drawings for placement.
j) Horizontal Fiber Optic to the parking lot lampposts:
    i) Pull will be from the rack mount fiber box designated for security systems to the lamppost.
    ii) Terminate each fiber at rack end and mount into fiber box.
    iii) At lamp post leave the equivalent of twice the pole height inside the base opening. Do not terminate cable. Seal cable with weather proof tape. Cable will be terminated and tested by owner.
k) Terminate all conductors; no cable shall contain unterminated elements. Make terminations only at indicated cross-connects, patch panels, workstations or locations as indicated in the Drawings.
l) Cables may not be spliced. Secure and support cables at intervals not exceeding 30 inches and not more than 6 inches from cabinets, boxes, fittings, outlets, racks, frames, and terminals.
m) Lacing/tie wraps will be accomplished by Velcro strapping. The strap must be able be rotatable without slipping. NO WIRE TIES WILL BE USED ON ANY CABLE OR CABLE BUNDLES.
n) Install lacing bars to restrain cables, to prevent straining connections, and to prevent bending cables to smaller radii than minimums recommended by manufacturer.
o) Bundle, lace, and train conductors to terminal points without exceeding manufacturer's limitations on bending radii. Use lacing bars and distribution spools.
p) Do not install bruised, kinked, scored, deformed, or abraded cable. Do not splice cable between termination, tap, or junction points. Remove and discard cable if damaged during installation and replace it with new cable.
q) Cold-Weather Installation: Bring cable to room temperature before de-reeling. Heat lamps shall not be used for heating.
r) In the communications equipment room, install a 3-5 foot long service loop on each end of cable neatly stored inside the Vertical management.
s) Pulling Cable: Comply with BICSI ITSIM, Chapter. 4, "Pulling Cable." Monitor cable pull tensions.
t) Only anchor the cable bundles at the network room cable trays starting at the top when it comes down into the room down to the racks.
u) When cable drops come off the tray it will go between the rungs. No cable will come over the top and bent over the edge. If the cable is to be pulled through the red iron the cable will go through the bottom of the cable tray between the rungs then up to the red iron. The only time cable will go over the edge of the cable tray is if another tray is connected at an angle to that tray and the cable is changing directions.

v) When the cable is installed there will be a minimum of 3ft of cable at drop location end for repair margin. If the drop is within 10ft of the cable tray, the repair margin can be anchored under the cable tray to one of the rungs. If more than 10ft then the repair margin will be anchored to the drops conduit above the wall. If there is not enough conduit then the margin can be anchored to the nearest red iron. Do not anchor to an electrical conduit. See drawings. When anchoring to the cable tray, wrap a plastic wire tie around the rung with the ratchet head below the rung. Then secure the repair margin to the wire tie with Velcro. See drawings:

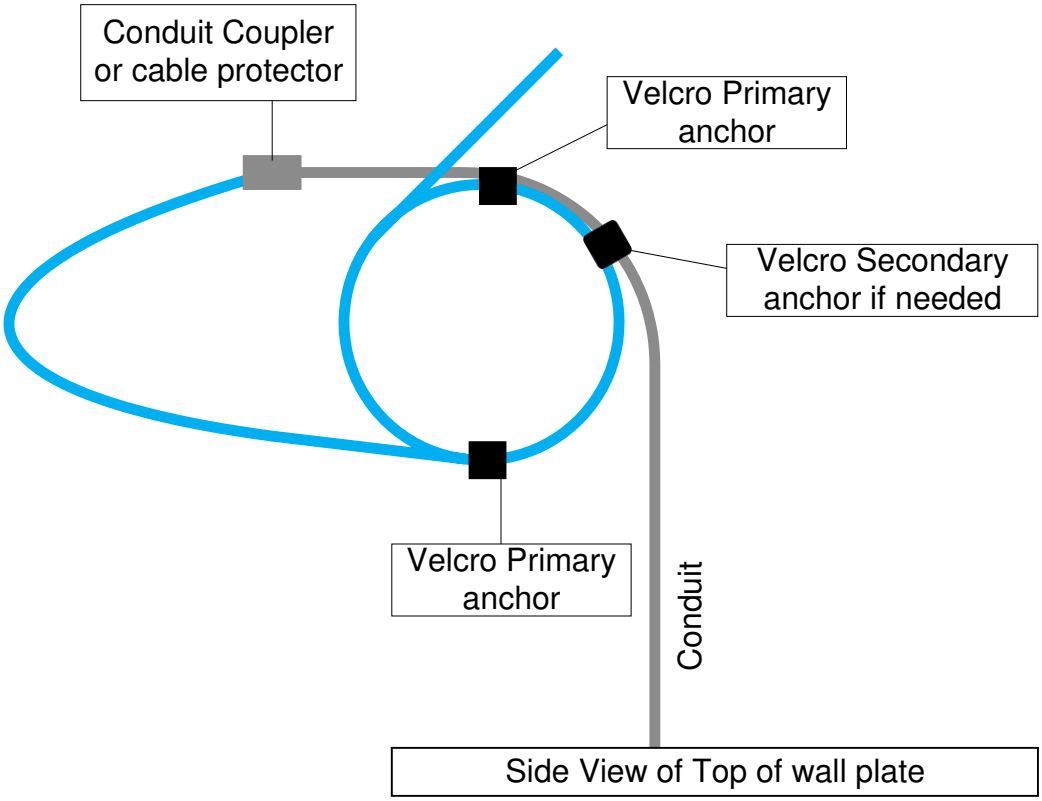

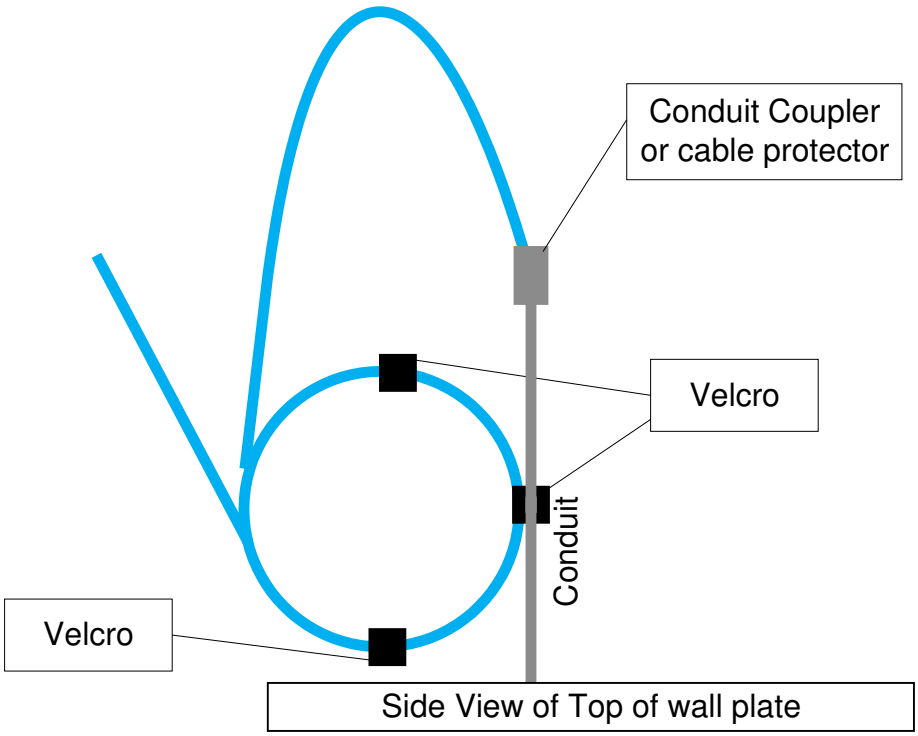

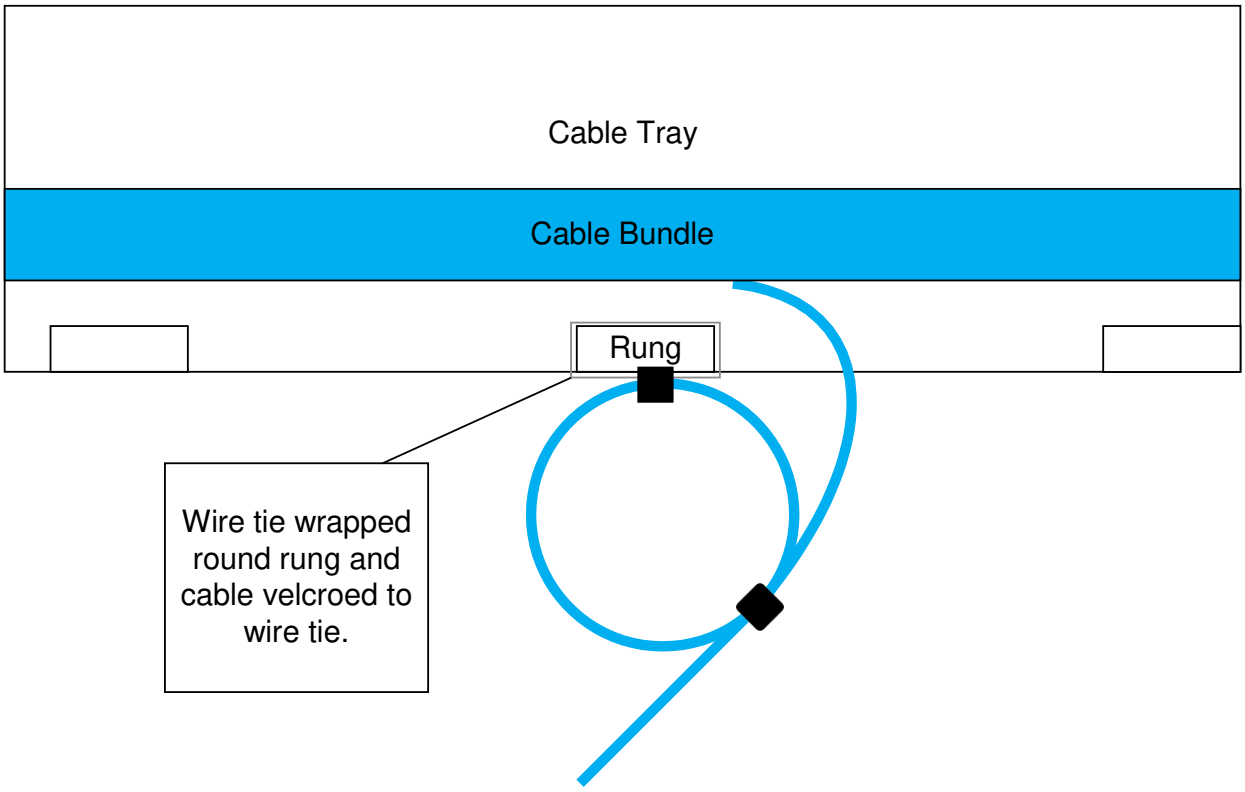

w) Separation from EMI Sources:

i) NO CONDUITS, POWER CABLE/CONDUCTORS OR EQUIPMENT SHALL BE LAID IN, THROUGH OR ACROSS THE TOP (WITHIN 12 INCHES) THE CABLE TRAY. IF CONDUITS, POWER CABLE/CONDUCTORS OR EQUIPMENT ARE UNDER THE TRAY, STEPS ii-vi BELOW WILL BE FOLLOWED.

ii) Comply with BICSI TDMM and TIA/EIA-5 69-A recommendations for separating unshielded copper voice and data communication cable from potential EMI sources, including electrical power lines and equipment.

iii) Separation between open communications cables, cables in nonmetallic raceways or fiber optic cable in armored cable and unshielded power conductors and electrical equipment shall be as follows:
(1) Electrical Equipment Rating Less Than 2 kVA: A minimum of 6 inches.
(2) Electrical Equipment Rating between 2 and 5 kVA: A minimum of 12 inches.
(3) Electrical Equipment Rating More Than 5 kVA: A minimum of 24 inches.

iv) Separation between communications cables in grounded metallic raceways/conduit and unshielded power lines or electrical equipment shall be as follows:
(1) Electrical Equipment Rating Less Than 2 kVA: A minimum of 6 inches.
(2) Electrical Equipment Rating between 2 and 5 kVA: A minimum of 6 inches.
(3) Electrical Equipment Rating More Than 5 kVA: A minimum of 12 inches.

v) Separation between communications cables in grounded metallic raceways and power lines and electrical equipment located in grounded metallic conduits or enclosures shall be as follows:
(1) Electrical Equipment Rating Less Than 2 kVA: A minimum of 1 inch.
(2) Electrical Equipment Rating between 2 and 5 kVA: A minimum of 3 inches.
(3) Electrical Equipment Rating More Than 5 kVA: A minimum of 6 inches.

vi) Separation between Communications Cables and Electrical Motors and Transformers, 5 kVA or HP and Larger: A minimum of 48 inches.

vii) Separation between Communications Cables and Fluorescent Fixtures:

(1) A minimum of 6 inches if cable is running perpendicular (90deg) to the fixture.
(2) A minimum of 2ft if running parallel to the fixture (including cable tray). If less than, reroute cable from another direction or have fixture moved.

5) GROUNDING
   a) Grounding will be in accordance with the Commercial Building Grounding (Earthing) and Bonding Requirements for Telecommunications J-STD-607 -A. Within the telecommunications room, Cable Tray should be bonded together, electrically continuous, and bonded to the TGB. Cable Tray and turns shall be bonded across each splice with a bonding kit (40164-001 or 025). Cable Tray shall be bonded to the Telecommunications Grounding Busbar (TGB) using an approved ground lug on the Cable Tray and a minimum #6 grounding wire. Remove paint from the Cable Tray where bonding/ground lugs contact the Cable Tray so that the lug will contact bare metal. Use antioxidant joint compound in between the bare metal on the Cable Tray and ground lug. Use antioxidant joint compound in between the bus bar and the ground lug. Verify continuity through the bonds at splices and intersections between individual Cable Tray sections and turns and through the bond to the TGB.
   b) Reference NFPA 70 (latest Edition) Article 250 for other grounding requirements.
   c) Grounding of patch panels, fiber boxes or equipment brackets to the racks can be accomplished by one Panduit bonding screw (reference Charts 1 and 2) on each side securing the bracket to the rack. Use of antioxidant paste is required.

6) IDENTIFICATION
   a) Comply with TINEIA-606-A.
      i) Administration class for this Project shall be Class 4.
      ii) Color-code cross-connect and telecom fields. Apply colors to voice and data service backboards, connections, covers, and labels.
   b) Use logical and systematic designations for facility's architectural arrangement and nomenclature, and a consistent color-coded identification of individual conductors.
      i) Jacks will be the color of the Closet/ Zone they are in. See Drawings.
         (1) Closet "A" – Blue
         (2) Closet "B" – Orange
         (3) Closet "C" – Green
         (4) Closet "D" – Red
         (5) Closet "E" – Off White
         (6) Security Cameras – Yellow
         (7) Multimedia – Violet
   c) Reference Part 2 – Products, Section 12.
   d) Exposed Cables and Cables in Cable Trays and Wire Troughs: Label each cable at intervals not exceeding 15 feet (4.5 m).
   e) Label each terminal strip and screw terminal in each cabinet, rack, or panel if applicable.
   f) Cable Schedule: Post in prominent location in each equipment room and wiring closet. List incoming and outgoing cables and their designations, origins, and destinations. Protect with rigid frame and clear plastic cover. Furnish an electronic copy of final comprehensive schedules for Project.
   g) Cabling Administration Drawings: Show building floor plans with cable administration-point labeling. Identify labeling convention and show labels for telecommunications closets, backbone pathways and cables, terminal hardware and positions, horizontal cables, work areas and workstation terminal positions, grounding buses and pathways, and equipment grounding conductors. Follow convention of TIAIEIA-606-A. Furnish electronic record of all drawings, in software and format selected by Owner.

7) FIELD QUALITY CONTROL
   a) Perform the following field tests and inspections and prepare test reports following the Standards and Code Compliance References for the following:
      i) Category 6a UTP Cabling Tests:
         (1) Test instruments shall meet or exceed applicable requirements as defined in the TIA Cat 6A Standard. Use only test cords and adapters that are qualified by test equipment manufacturer for channel or link test configuration. Owner prefers that tester be the Fluke DTX-1800 as owner can except all test reports in the LinkWare file format. The tester will have current calibration sticker attached and a copy of sticker or calibration certificate attached to final documentation.
         (2) Visually inspect cable placement, cable termination, grounding and bonding, equipment and patch cords, and labeling of all components.
         (3) Wire-map test that reports open circuits, short circuits, crossed pairs, reversed pairs, split pairs, and improper terminations.
         (4) Channel and permanent link tests for cable length, insertion loss, near-end crosstalk loss, power sum near-end crosstalk loss, equal-level far-end crosstalk loss, power sum equal level far-end crosstalk, return loss, propagation delay, and delay skew. Performance shall comply with guaranteed channel performance up to 500MHz.
         (5) Alien Crosstalk will not be required.
      ii) Category 6a UTP Cabling Tests:
         (1) Test instruments shall meet or exceed applicable requirements as defined in the TIA Cat 6A Standard. Use only test cords and adapters that are qualified by test equipment manufacturer for channel or link test configuration. Owner prefers that tester be the Fluke DTX-1800 as owner can except all test reports in the LinkWare file format. The tester will have current calibration sticker attached and a copy of sticker or calibration certificate attached to final documentation.
         (2) Visually inspect cable placement, cable termination, grounding and bonding, equipment and patch cords, and labeling of all components.
         (3) Wire-map test that reports open circuits, short circuits, crossed pairs, reversed pairs, split pairs, and improper terminations.
         (4) Channel and permanent link tests for cable length, insertion loss, near-end crosstalk loss, power sum near-end crosstalk loss, equal-level far-end crosstalk loss, power sum equal level far-end crosstalk, return loss, propagation delay, and delay skew. Performance shall comply with guaranteed channel performance up to 500 MHz.
      iii) Back Bone Fiber Cable
         (1) Test instruments shall meet or exceed applicable requirements. Use only test cords and adapters that are qualified by test equipment manufacturer for channel or link test configuration. Owner prefers that tester be the Fluke DTX-1800 as owner can except all test reports in the LinkWare file format. The tester will have current calibration sticker attached and copy of sticker or calibration certificate attached to final documentation.
         (2) Visually inspect cable placement, cable termination, grounding and bonding, equipment and patch cords, and labeling of all components. Inspect cabling terminations in communications equipment rooms for compliance with color-coding.
         (3) Optical Fiber Cable Tests:
            (a) Field-test instruments shall have the latest software and firmware installed.
            (b) Link and channel test results from the OLTS and OTDR shall be recorded in the test instrument upon completion of each test for subsequent uploading to a PC in which the administrative documentation (reports) may be generated.

(c) Fiber end-faces shall be inspected at 200X or 400X magnification. 200X magnification is suitable for inspecting multimode and singlemode fibers. 400X magnification may be used for detailed examination of singlemode fibers. Scratched, pitted or dirty connectors shall be diagnosed and corrected.
   (i) If possible it is preferable that the end-face images be recorded in the memory of the test instrument for subsequent uploading to a PC and reporting.

(d) Testing shall be performed on each cabling segment (connector to connector).

(e) Testing shall be performed on each cabling channel (equipment to equipment) that is planned for use per the owner's instructions.

(f) Testing of the cabling shall be performed using high-quality test cords of the same fiber type as the cabling under test. The test cords for OLTS testing shall be between 1 m and 5 m in length. The test cords for OTDR testing shall be approximately 100 m for the launch cable and at least 25 m for the receive cable.

(g) Optical loss testing
   (i) Backbone link
      1. Multimode backbone links shall be tested at 850 nm and 1300 nm in accordance with ANSI/EIA/TIA-526-14A, Method B, One Reference Jumper or the equivalent method.
      2. Link attenuation does not include any active devices or passive devices other than cable, connectors, and splices, i.e. link attenuation does not include such devices as optical bypass switches, couplers, repeaters, or optical amplifiers.
      3. Use the One Reference Jumper Method specified by ANSI/TIA/EIA-526- 1 4A, Method B and ANSI/TIA/EIA-526-7, Method A. 1or the equivalent method. The user shall follow the procedures established by these standards or application notes to accurately conduct performance testing.

(h) OTDR Testing
   (i) Backbone, horizontal and centralized links shall be tested at the appropriate operating wavelengths for anomalies and to ensure uniformity of cable attenuation and connector insertion loss.
   (ii) Backbone multimode: 850 nm and 1300 nm
   (iii) Each fiber link and channel shall be tested in one direction.
   (iv) A launch cable shall be installed between the OTDR and the first link connection.
   (v) A receive cable shall be installed after the last link connection.

(i) Magnified Endface Inspection
   (i) Fibers shall be inspected at 250X or 400X magnification. The 250X magnification is suitable for inspecting multimode and singlemode fibers. 400X magnification may be used for detailed examination of singlemode fibers.

(j) Length Measurement
   (i) The length of each fiber shall be recorded.
   (ii) It is preferable that the optical length be measured using an OLTS or OTDR.

(k) A Fail or Fail* result must be diagnosed corrected and retested.
   (i) If not able to be corrected then remove, replace cabling and retest where test results indicate that they do not comply with specified requirements and the cost shall be borne by the installation contractor
   (ii) If the results cannot be corrected then the installation contractor may bring in the manufacture's agent, technician or engineer and the cost shall be borne by the installation contractor. If determined that the problem cannot be corrected then under supervision of

the end-user, the representative shall repeat 100% removal, reinstallation and testing and the cost shall be borne by the installation contractor.

iv) Horizontal Fiber Optic to the parking lot lampposts.
(1) Visually inspect cable placement, cable termination, grounding and bonding, equipment and patch cords, and labeling of all components. Inspect cabling terminations in communications equipment rooms for compliance with color-coding.
(2) Visual light test connection with bright light or visible light.
(a) If not visible, terminate cable and test as an iii) Back Bone Fiber Cable to trouble shoot. If fail must be diagnosed corrected and retested.
(i) If not able to be corrected then remove, replace cabling and retest where test results indicate that they do not comply with specified requirements and the cost shall be borne by the installation contractor
(ii) If the results cannot be corrected then the installation contractor may bring in the manufacture's agent, technician or engineer and the cost shall be borne by the installation contractor. If determined that the problem cannot be corrected then under supervision of the end-user, the representative shall repeat 100% removal, reinstallation and testing and the cost shall be borne by the installation contractor.
(3) Cable will be final tested by Owner at a later date.
v) Cable Samples, the 6a & 6e cable will be tested and added to documentation and warranty.
(1) Use the samples to check verification of manufacturer recommendations for setting the testers.

b) Trained technicians who have successfully attended an appropriate training program and have obtained a certificate as proof thereof shall execute the tests. Appropriate training programs include but are not limited to installation certification programs provided by BICSI or the ACP (Association of Cabling Professionals). A copy of the certification will be attached to final documentation.

c) One hundred percent of the installed cabling links must pass the requirements of the standards mentioned above except as noted. Any failing link must be diagnosed and corrected. The corrective action shall be followed with a new test to prove that the corrected link meets the performance requirements. The final and passing result of the tests for all links shall be provided in the test results documentation.

d) The tester interface adapters must be of high quality and the cable shall not show any twisting or kinking resulting from coiling and storing of the tester interface adapters. In order to deliver optimum accuracy, preference is given to a permanent link interface adapter for the tester that can be calibrated to extend the reference plane of the Return Loss measurement to the permanent link interface. The contractor shall provide proof that the interface has been calibrated within the period recommended by the Manufacturer. To ensure that normal handling on the job does not cause measurable Return Loss change, the adapter cord cable shall not be of twisted-pair construction.

e) The Pass or Fail condition for the link-under-test is determined by the results of the required individual tests (detailed in Section I.2.2 of ANSI/TIA/EIA-568-B.2). Any Fail or Fail* result yields a Fail for the link-under-test. In order to achieve an overall Pass condition, the results for each individual test parameter must Pass or Pass*.
i) A Pass or Fail result for each parameter is determined by comparing the measured values with the specified test limits for that parameter. The test result of a parameter shall be marked with an asterisk (*) when the result is closer to the test limit than the accuracy of the field tester. The field tester manufacturer must provide documentation as an aid to interpret results marked with asterisks. To which extent '*' results shall determine approval or disapproval of the element under test shall be defined in the relevant detail specification, or agreed on as a part of a contractual specification.
ii) A Fail or Fail* result must be diagnosed corrected and retested.

(1) If not able to be corrected then remove, replace cabling and retest where test results indicate that they do not comply with specified requirements and the cost shall be borne by the installation contractor
(2) If the results cannot be corrected then the installation contractor may bring in the manufacture's agent, technician or engineer and the cost shall be borne by the installation contractor. If determined that the problem cannot be corrected then under supervision of the end-user, the representative shall repeat 100% removal, reinstallation and testing and the cost shall be borne by the installation contractor.

f) Additional Requirements:
   i) A representative of the end-user shall be invited to witness field testing. The representative shall be notified of the start date of the testing phase five business days before testing commences.
   ii) At an agreed time a representative of the end-user will select a random sample of 10% of the installed links. The representative (or his authorized delegate) shall test these randomly selected links and the results are to be stored in a separate documentation that will be attached with final documentation (but does not have to be submitted for warranty). The results obtained shall be compared to the data provided by the installation contractor. If more than 3% of the sample results differ in terms of the pass/fail determination:
      (1) The installation contractor under supervision of the end-user representative shall repeat 100% testing and the cost shall be borne by the installation contractor.
      (2) If the results cannot be corrected then the installation contractor may bring in the manufacture's agent, technician or engineer and the cost shall be borne by the installation contractor. If determined that the problem cannot be corrected then under supervision of the end-user, the representative shall repeat 100% removal, reinstallation and testing and the cost shall be borne by the installation contractor.

8) TEST RESULTS DOCUMENTATION

a) The test results/measurements shall be transferred into a Windows™-based database utility that allows for the maintenance, inspection and archiving of these test records. A guarantee must be made that the measurement results are transferred to the PC unaltered, i.e., "as saved in the tester" at the end of each test and that these results cannot be modified at a later time. The file format, CSV (comma separated value), does not provide adequate protection of these records and shall not be used. Owner prefers that the test results/measurements be in the LinkWare file format.

b) The database for the completed job shall be stored and delivered on CD-ROM or DVD including the software tools required to view, inspect, and print any selection of test reports.

c) A paper copy of the test results shall be provided that lists all the links that have been tested with the following summary information
   i) The identification of the link in accordance with the naming convention defined in the overall system documentation
   ii) The overall Pass/Fail evaluation of the link-under-test including the NEXT Headroom (overall worst case) number
   iii) The date and time the test results were saved in the memory of the tester.

d) General Information to be provided in the electronic data base with the test results information for each link:
   i) The identification of the customer site as specified by the end-user
   ii) The name of the personnel performing the test
   iii) The identification of the link in accordance with the naming convention defined in the overall system documentation

iv) The overall Pass/Fail evaluation of the link-under-test

v) The name of the standard selected to execute the stored test results

vi) The date and time the test results were saved in the memory of the tester

vii) The brand name, model and serial number of the tester

viii) The identification of the tester interface

ix) The revision of the tester software and the revision of the test standards database in the tester

x) The test results information must contain information on each of the required test parameters that are listed.

e) For all copper (6a & 6e)

i) The cable type and the value of NVP used for length calculations

ii) In-link (In-Channel) detailed test results. The detailed test results data to be provided in the electronic database for must contain the following information:

iii) For each of the frequency-dependent test parameters, the value measured at every frequency during the test is stored. The PC-resident database program must be able to process the stored results to display and print a color graph of the measured parameters. The PC-resident software must also provide a summary numeric format in which some critical information is provided numerically as defined by the summary results (minimum numeric test results documentation) as outlined above for each of the test parameters.

(1) Length: Identify the wire-pair with the shortest electrical length, the value of the length rounded to the nearest 0.1 m (1) and the test limit value.

(2) Propagation delay: Identify the pair with the shortest propagation delay, the value measured in nanoseconds (ns) and the test limit value.

(3) Delay Skew: Identify the pair with the largest value for delay skew, the value calculated in nanoseconds (ns) and the test limit value.

(4) Insertion Loss (Attenuation): Minimum test results documentation as explained in Section B for the worst pair.

(5) Return Loss: Minimum test results documentation as explained in Section B for the worst pair as measured from each end of the link.

(6) NEXT, ACR-F: Minimum test results documentation as explained in Section B for the worst pair combination as measured from each end of the link.

(7) PS NEXT and PS ACR-F: Minimum test results documentation as explained in Section B for the worst pair as measured from each end of the link.

iv) Between-Link (Between-Channel) Test Results Data

v) A test report shall be provided for each disturbed link included in the Alien Crosstalk sample test. This test report must contain:

(1) PS ANEXT results at each frequency (See Table 1) for each wire pair in a victim link as well as the PS ANEXT results for the average of these four wire pairs. The worst case margin and the worst values shall be provided for each wire pair and the average of the four wire pairs. PS ANEXT shall be measured and tested from the end of the link or channel where all cables are terminated at a distribution panel. In case the cabling runs from panel to panel (data center) where the worst case PS ANEXT margin is less than 2 dB, the PS ANEXT test results for each disturbed link shall be collected and saved from both ends (both panels) of the disturbed link.

(2) PS AACR-F results at each frequency tested for each wire pair in a disturbed link as well as the PS AACR-F results for the average of the four wire pairs. The worst case margin and the worst values shall be provided for each wire pair and the average of the four wire pairs. PS AACR-F only needs to be measured and tested from one end of the link or channel.

f) Fiber tests:

i) The fiber identification number.

ii) The length for each optical fiber.

(1) Optionally the index of refraction used for length calculation when using a length capable OLTS.

iii) Test results to include OLTS attenuation link and channel measurements at the appropriate wavelength(s) and the margin (difference between the measured attenuation and the test limit value).

iv) Test results to include OTDR link and channel traces and event tables at the appropriate wavelength(s).

v) The length for each optical fiber as calculated by the OTDR.

vi) The overall Pass/Fail evaluation of the link-under-test for OLTS and OTDR measurements.

vii) A picture or image of each fiber end-face if done.

viii) A pass/fail status of the end-face based upon visual inspection.

9) CONSTRUCTION REVIEW

c) The following shall be examined and shall comply satisfactorily in all instances.

i) Design documentation complete.

ii) All cables properly labeled, from end-to-end.

iii) All terminated cables been properly tested in accordance with the specifications for the specific category as well as tested for opens, shorts, polarity reversals, transposition and presence of AC and/or DC voltage.

iv) The cable type suitable for its pathway.

v) The cables bundled in parallel.

vi) The pathway manufacturer's guidelines been followed.

vii) All cable penetrations installed properly and fire stopped according to code.

viii) The Contractors avoided excessive cable bending.

ix) Potential EMI and RFI sources been considered.

x) Table Fill is correct.

xi) All hanging supports are within 1.5 meters (5 feet).

xii) Hanging cable exhibit some sag.

xiii) IDF room terminations are compatible with applications equipment.

xiv) Patch Panel instructions been followed:

(1) Jacket removal point

(2) Termination positions

(3) All pair terminations tight with minimal pair distortions

(4) Twists maintained up to Index Strip

xv) Modular Panel instructions been followed:

(1) Cable dressing first

(2) Jackets remain up to the Connecting Block

(3) All pair terminations tight and undistorted

(4) Twists maintained up to the Connecting Block

xvi) Connectors are properly turned right side up in the Jack Panels without cables wrapped or twisted around the Mounting Collars.
xvii) The correct outlet connectors have been used
xviii) Outlets have been wired correctly (T568B)
xix) The cable jacket maintained up to the Jack.
xx) Identification markings uniform, permanent and readable.

d) The Owner, its Consultants, Construction Manager, CNIT, and their agents will review and observe installation work to ensure compliance by the contractor with requirements of the Contract Documents.
e) The contractor shall inspect and test completed communications installations to demonstrate specified performance levels including the following:
   i) Furnish all instruments and personnel required for the inspections and tests.
   ii) Perform tests in the presence of the Engineer and Owner when required.
   iii) Demonstrate that the system components operate in accordance with the Contract Documents.
f) Review, observation, assistance, and actions by the Owner, its Consultants, Construction Manager, CNIT, and their agents shall not be construed as undertaking supervisory control of the work or of methods and means employed by the contractor. The Owner, its Consultants, Construction Manager, CNIT, and their agents review and observation activities shall not relieve the contractor from the responsibilities of these Contract Documents.
g) The fact that Owner, its Consultants, Construction Manager, CNIT, and their agents does not make early discovery of faulty or omitted work shall not bar the Owner from subsequently rejecting this work and withholding payment until the contractor makes the necessary corrections.
h) Regardless of when discovery and rejection are made, and regardless of when the contractor is ordered to correct such work, the contractor shall have no claim against the Owner, its Consultants, Construction Manager, CNIT, and their agents for an increase in the Subcontract price, or for any payment on account of increased cost, damage, or loss.

10) DEFINITION OF ACCEPTANCE

a) System acceptance shall be defined as that point in time when the following requirements have been fulfilled:
   i) The complete system has successfully completed all testing requirements.
   ii) All punch list items have been corrected and accepted.
   iii) All submittals and documentation have been submitted, reviewed, and approved. Including:
      (1) A list of the documentation showing what was submitted to Panduit for the CERTIFICATION PLUSSM SYSTEM WARRANTY PROGRAM according to the Panduit Warranty Guide.
         (a) A copy of the E-form, or Fax is acceptable. Or
         (b) If mailed, a copy of the package Tracking number is acceptable.
      (2) Verification of delivery will be done by Owner, its Consultants, CNIT, and their agents with Panduit. If:
         (a) Verified as delivered then acceptance can continue.
         (b) Verified as NOT delivered, then the acceptance is not complete.

SECTION 27 5313

CLOCK SYSTEMS

PART 1 - GENERAL

1.1 RELATED DOCUMENTS

A. Drawings and general provisions of the Contract, including General and Supplementary Conditions and Division 01 Specification Sections, apply to this Section.

1.2 SUMMARY

A. Section Includes:

1. Master clock and program control unit.
2. Secondary indicating clocks.
3. Program signal devices.
4. Clock circuit power boosters.
5. System wire and cable.

1.3 DEFINITIONS

A. NIST: The National Institute of Science and Technology.

B. PC: Personal computer.

C. UTC: Universal time coordinated. The precisely measured time at zero degrees longitude; a worldwide standard for time synchronization.

1.4 PERFORMANCE REQUIREMENTS

A. Seismic Performance: Master clock and housing shall withstand the effects of earthquake motions determined according to ASCE/SEI 7.

1. The term "withstand" means "the unit will remain in place without separation of any parts from the device when subjected to the seismic forces specified and the unit will be fully operational after the seismic event."

1.5 ACTION SUBMITTALS

A. Product Data: For each type of product indicated. Include construction details, material descriptions, dimensions of individual components and profiles, and finishes (including available colors) for each product indicated and describe features and operating sequences, both automatic and manual, for the following:

1. Master unit.
2. Indicating clocks.

3. Signal equipment.
4. Equipment enclosures and back boxes.
5. Accessory components.

B. Shop Drawings: For clock systems. Include plans, elevations, sections, details, and attachments to other work.

1. Wiring Diagrams: For power, signal, and control wiring and correction circuits.

   a. Identify terminals and wiring color codes to facilitate installation, operation, and maintenance.
   b. Indicate recommended wire types and sizes, and circuiting arrangements for field-installed system wiring. Show protection from overcurrent, static discharge, and voltage surge.

2. Details of seismic restraints including mounting, anchoring, and fastening devices for the following system components:

   a. Surface-mounted and semi-recessed secondary indicating clocks.
   b. Master clock enclosures and mounting racks.
   c. Clock circuit power boosters.

3. Details of seismic strengthening of master clock enclosures and mounting racks.
4. Dimensioned Outline Drawings of the Mounting Rack for the Master Clock: Show internal seismic bracing, and locate center of gravity of fully equipped and assembled unit. Locate and describe mounting and anchorage provisions.

C. Delegated-Design Submittal: For the master clock and housing indicated to comply with performance requirements and design criteria, including analysis data signed and sealed by the qualified professional engineer responsible for their preparation.

1. Detail fabrication and assembly of the master clock and housing.
2. Design Calculations: Calculate requirements for selecting seismic restraints.

1.6 INFORMATIONAL SUBMITTALS

A. Seismic Qualification Certificates: For the master clock, accessories, and components, from manufacturer.

1. Basis for Certification: Indicate whether withstand certification is based on actual test of assembled components or on calculation.
2. Dimensioned Outline Drawings of Equipment Unit: Identify center of gravity and locate and describe mounting and anchorage provisions.
3. Detailed description of equipment anchorage devices on which the certification is based and their installation requirements.

B. Field quality-control reports.

1.7 CLOSEOUT SUBMITTALS

A. Operation and Maintenance Data: For clock and program control to include in emergency, operation, and maintenance manuals.

1.8 QUALITY ASSURANCE

A. Electrical Components, Devices, and Accessories: Listed and labeled as defined in NFPA 70, by a qualified testing agency, and marked for intended location and application.

B. Comply with NFPA 70.

PART 2 - PRODUCTS

2.1 MASTER AND SECONDARY CLOCK SYSTEM

A. Manufacturers
   1. American Time and Signal Co
   2. Dukane Communication Systems
   3. Faraday
   4. Lathem Time
   5. Midwest Time Control, Inc
   6. National Time and Signal Corporation
   7. Rauland-Borg Corporation
   8. Sapling, Inc.
   9. SimplexGrinnell LP
   10. Telecore Inc

B. System Functions and Features:

   1. Supply power to remote indicating clocks.
   2. Maintain correct synchronized time and transmit time-correction signals over dedicated system wiring from a master clock to any two type(s) of secondary indicating clocks, including the following:

      a. Analog Synchronous Clocks: Correct for minute- and second-hand synchronization at least once each hour and for hour-hand synchronization at least once each day.
      b. Digital Clocks: Test clocks automatically for synchronization with master time control at least once every hour and automatically correct those not synchronized with the time reference unit. Automatically correct clocks immediately when power is restored after an outage of power to the master clock.

   3. Initiate and execute programs for scheduled automatic operation of remote devices. Include audible signal devices and visual signal devices and on and off switching of equipment and circuits.
   4. Provide for manual control of programmed signal and equipment-switching circuits.
   5. Communicate with remote PC for access to UTC time base and to permit programming from remote location.
   6. Maintain system access security with a minimum of one level of user-access control to restrict use of system controls to authorized personnel. Levels of access apply to both local access and access from a remote computer. Access to user programming and control functions is accomplished by entering a minimum three-digit code. Access levels include the following:
      a. Access to all user-programming and control functions.

   7. Regulate system timing functions using power-line frequency, backed up for power outages by an internal battery-powered, crystal-controlled oscillator.

8. Regulate system timing functions using power-line frequency, backed up for power outages by an internal battery-powered, crystal-controlled oscillator, and automated periodic reference to NIST or UTC time signals via internal modem and network or microcomputer Internet access. Reference time signals shall be automatically accessed at programmable intervals.
9. Provide for programming multiple independent event schedules into memory and running them simultaneously for different output circuits.

    a. Quantity of Programmable Schedules: As required by the Owner.
    b. Number of Weekly Events That Can Be Programmed for Each Schedule: As required by the owner.
    c. Simultaneous operation of independent schedules shall be limited only by the number of signal-device and equipment-switching output circuits.
    d. Advance Programming for Automatic Holiday Schedule Changes: Number of schedule changes that can be programmed to suit holidays and vacations shall be as required by the owner, and each change may be programmed up to a year in advance to occur on any day of the calendar year.

10. Automatically check functioning of LEDs, switches, input keys, central processor, read-only memory, random access memory, and output circuits. A display on the control panel or a remote computer with the proper access code shall indicate failure by identifying faulty component or circuit and shall recommend corrective action.
11. Provide programming for automatic daylight savings time correction.
12. Provide for adjustments to master clock output signals. Duration of momentary signal shall be individually programmable for each signal and equipment-control output circuit from 1 to 99 seconds. Signals shall be programmable for either on or off switching to suit equipment-operation scheduling.

2.2 MASTER CLOCK

A. Description: Microprocessor-based, software-controlled unit complying with Class A device requirements in 47 CFR 15.

1. Programming and control switches.
2. Informational Display: LED or backlit LCD type.

    a. Normally shows current time, date, and day of week display.
    b. Provides programming cues when system is being programmed.

3. Output Circuits for Power and Correction of Secondary Indicating Clocks:

    a. Wired Synchronous Clock Power-and-Correction Circuits: For analog and digital clocks; a minimum of one required. Relay controlled.
    b. Wired Synchronous Digital Clock Power-and-Correction Circuits: One required.

4. Data Output Port for[Digital] Secondary Clock Correction Circuit: RS485 or similar circuit for scheduled periodic correction signals.
5. Modem and PC interface software suitable for remote programming.
6. Circuits for Audible and Visual Signal Devices: Relay controlled, manually switchable, using controls on the master clock. Rated 120-V ac, 10 A minimum. Number of circuits as required.
7. Circuits for Programmable Switching of Remote Equipment and Circuits: Relay controlled, manually switchable, using controls on the master clock. Rated 120-V ac, 10 A minimum. Number of circuits as required..

8. Power Supplies: Capacity for internal loads and power-and correction circuits of connected clocks.
9. Enclosure: Metal cabinet with locking front panel. When cabinet is locked, display indication shall be visible on or through front panel face. Arrange cabinet for surface, semirecessed, or flush mounting as indicated.
10. Housing: Rack-mounting metal enclosure with display indication visible on front panel face.

    a. Reinforce mounting and attachment capable of resisting seismic forces described in Section 26 0548.16 "Seismic Controls for Electrical Systems."

11. Battery Backup for Time Base: Lithium battery to maintain the timekeeping function and retain the programs in memory during outage of normal ac power supply for up to 10 years.

2.3 SECONDARY INDICATING CLOCKS

A. Analog Clock: Equipped with a sweep second hand. Movement shall be driven by self-starting, permanently lubricated, sealed synchronous motor equipped with a correcting solenoid actuator, or be a microprocessor-based, second impulse unit, compatible with the master clock.

B. Digital Clock: Microprocessor-controlled unit complying with Class A device requirements in 47 CFR 15, with red LED digital time display of hours, minutes, and seconds.

1. Display Height: 2-1/2-Inch (64-mm) Clock: Hour and minute numerals readable at 50 feet (15 m).
2. Display Height: 4-Inch (102-mm) Clock: Hour and minute numerals readable at 100 feet (30 m).
3. Display Format: Selectable between 12-hour with "PM" LED display and 24-hour formats.
4. Connections for Power and Correction:

    a. Wired synchronous connection to the master clock for both operating power and correction.

        1) Time-Base Backup: Internal alkaline battery shall back up internal time base to maintain timekeeping during power outages of up to six days' duration.
        2) Time-Base Backup: Internal capacitor shall back up internal time base to maintain timekeeping during power outages of up to 12 hours' duration.

    b. Correction by RS485, Ethernet, or similar data line with operating power supplied over a separate connection.
    c. Power Connection for Secondary Indicating Clocks: Plug connector.

C. Interval-Timer Clock: Digital microprocessor-controlled, 4-inch (102-mm) unit with 2-1/2-inch (64-mm), red LED digital display for hours and minutes and 1-5/16-inch (33-mm) display for seconds; a separately mounted, mode-control switch; and the following features:

1. Display Visibility: Hour and minute numerals readable at [30 feet (10 m)] in normal ambient light.
2. Operating Modes:

    a. Normal: Clock operates as a regular secondary system clock, displaying corrected time in normal display configuration, selectable between 12- and 24-hour formats, with "PM" digital display for 12-hour format.

b. Count-Down or Count-Up Timer: Selected by mode-control switch count-up and count-down positions, and capable of being preset at the mode-control station.
c. Code Blue: Automatically selected by a signal through a wiring connection from the code-blue system. This signal captures control of the clock regardless of current mode or correction status and instantly initiates count-up operation, starting at time 00:00:00. While in this mode, other clock functions, including correction, shall run in the background. Clock shall revert to normal operating mode when the initiating-signal system is reset.

3. Mode-Selector Switch: Push-button or rotary, multiposition type, flush mounted; with start, stop, and reset capability in both count-up and count-down modes.
4. Audible tone signal: Housed in clock or mode-selector-switch box. Sounds at end of preset up or down count.

D. Provision for Modular Panel Installation: Equip designated clock for panel mounting. Mount flush or semirecessed with arrangement and trim as indicated. Coordinate wiring with other modular panel components, including room lighting switches, intercom devices, convenience outlets, data outlets, speaker and other similar devices.

2.4 PROGRAM SIGNAL DEVICES

A. Bells: Heavy-duty, modular, vibrating type with the following sound-output ratings measured at 10 feet (3 m):

1. 4-Inch (100-mm) Bell: 90 dB.
2. 6-Inch (150-mm) Bell: 95 dB.
3. 10-Inch (250-mm) Bell: 104 dB.

B. Chimes: Heavy-duty, modular, vibrating chimes with polished-chrome tone bar and enamel-finished housing. Minimum sound-output rating measured at 10 feet (3 m) shall be 75 dB.

C. Clock Buzzers: Adjustable output signal device designed for mounting within clock housing or outlet box.

1. Sound-Output Rating Measured at 3 Feet (1 m): 75 dB.
2. Audible Tone Frequency: Manufacturer's standard between 120 Hz and 2 kHz.

D. Horns: Modular, adjustable-output, vibrating type with minimum full-intensity-rated sound output of 103 dB measured at 10 feet (3 m).

E. Projector Horns: Adjustable-output, vibrating type with single projector arranged to channel sound in the direction of the projector axis, and with minimum full-intensity-rated sound output of 104 dB measured at 10 feet (3 m).

F. Loudspeakers for Audible Tones: See Section 27 5116 "Public Address and Mass Notification Systems."

G. Visible Signal Devices: Strobe lights with blue or yellow polycarbonate lens and xenon flash tube, with lens mounted on an aluminum faceplate and the word "Program" engraved in letters at least 1 inch (25 mm) high on lens. Lamp unit shall have a minimum rated light output of 75 candela.

H. Combination Audible and Visible Signal Devices: Factory-integrated horn and strobe light in a single mounting assembly.

I. Outdoor Signal Equipment: Weatherproof models listed for outdoor use.

J. Mounting Arrangement for Signal Devices: Designed for attachment with screws on the mounting plate of a flush-mounted back box unless otherwise indicated.

K. Enclosures for Flush-Mounting Bells and Horns: Enclosure, mounting plate, and grille assembly shall be furnished by device manufacturer to match features of the device to be mounted. Enclosure shall be recessed in wall, completely enclosing the device, with grille mounting over the open side of the enclosure and flush with the wall.

L. Connection Provision for Signal-Indicating Devices: Plug connector, or Wire pigtail or compression splice.

2.5 CLOCK CIRCUIT POWER BOOSTER

A. Description: Transformer power supply, mounted in steel cabinet with hinged door, and having fuse-protected input and output circuits.

2.6 BACK BOXES FOR SECONDARY INDICATING CLOCKS AND PROGRAM DEVICES

A. Description: Box and cover-plate assembly shall be furnished by device manufacturer and be suitable for device to be mounted. Back boxes shall be equipped with knockouts and hanger straps or mounting adapters arranged for flush mounting the device unless otherwise indicated.

2.7 GUARDS

A. Description: Formed-steel wire, shaped to fit around guarded device, with 1-inch (25-mm) maximum clearance.

1. Mounting Provisions: Fixed tabs, welded to guard and arranged for screw attachment to mounting surface.
2. Finish for Indoor Devices: Clear epoxy lacquer over zinc plating.
3. Finish for Outdoor Devices: Black powder coat over zinc plating and primer.

2.8 RACK-MOUNTING PROVISION FOR MASTER CLOCK

A. Equipment Cabinet: Wall-mounted, rack type. Comply with EIA-310-D and the following:

1. Cabinet Housing: Constructed of steel, with front doors; with manufacturer's standard tumbler locks, keyed alike.

    a. Front door shall have a clear panel in front of the master clock display.
    b. Housing shall enclose master clock and auxiliary clock system components, plus a minimum of 20 percent spare capacity for future equipment.

2. Forced Ventilation: Internal low-noise fan with a filtered intake vent, connected to operate from 105- to 130-V ac, 60 Hz; separately fused and switchable and arranged to be powered when main cabinet power switch is on.
3. Natural Ventilation: Ventilated rear and sides with louvers and solid top.

4. Arrange inputs, outputs, interconnections, and test points so they are accessible at rear of rack for maintenance and testing, with each item removable from rack without disturbing other items or connections.
5. Blank Panels: Cover empty space in equipment racks so entire front of rack is occupied by equipment or panels.
6. Finish: Uniform, baked-enamel, manufacturer's standard color finish over rust-inhibiting primer.
7. Power-Control Panel: On front of equipment housing; with master power on-off switch and pilot light, and socket for a 5-A, indicating, cartridge fuse for rack equipment power.
8. Vertical Plug Strip: Grounded receptacles, 12 inches (300 mm) o.c. the full height of rack, to supply rack-mounting equipment.
9. Maintenance Receptacles: Duplex convenience outlet with supply terminals separate from equipment plug strip and located in front of rack.

2.9 CONDUCTORS AND CABLES

A. Conductors: Jacketed, twisted pair and twisted multipair, untinned solid copper. Sizes as recommended by system manufacturer, but not smaller than No. 22 AWG. Voltage drop for signal, control, and clock correction circuits shall not exceed 10 percent under peak load conditions. Comply with requirements in Section 27 1500 "Communications Horizontal Cabling."

B. 120-V AC and Class 1 Signal and Control Circuits: Stranded, single conductors of size and type recommended by system manufacturer. Materials and installation requirements are specified in Section 26 0519 "Low-Voltage Electrical Power Conductors and Cables."

C. Class 2 and Class 3 Signal and Control Circuits: Single conductor or twisted-pair cable, unshielded, unless manufacturer recommends shielded cable.

D. Data Circuits: Category 6 minimum, unshielded, twisted-pair cable, unless manufacturer recommends shielded cable.

E. Insulation: Thermoplastic, not less than 1/32 inch (0.8 mm) thick.

F. Plenum Cable: Listed and labeled for plenum installation.

G. Conductor Color-Coding: Uniformly identified and coordinated with wiring diagrams.

H. Shielding: For speaker-microphone leads and at other locations recommended by manufacturer; No. 34 AWG tinned, soft-copper strands formed into a braid or equivalent foil.

1. Minimum Shielding Coverage on Conductors: 60 percent.

2.10 PATHWAYS

A. Intercommunication and Program System Raceways and Boxes: Comply with requirements in Division 26 Section "Raceway and Boxes for Electrical Systems."

B. Intercommunication and Program System Raceways and Boxes: Same as required for electrical branch circuits specified in Division 26 Section "Raceway and Boxes for Electrical Systems."

C. Outlet boxes shall be no smaller than 2 inches (50 mm) wide, 3 inches (75 mm) high, and 2-1/2 inches (64 mm) deep.

D. Flexible metal conduit is prohibited.

PART 3 - EXECUTION

3.1 INSTALLATION

A. Mount system components with fastening methods and devices designed to resist the seismic forces indicated in Section 26 0548.16 "Seismic Controls for Electrical Systems."

3.2 WIRING METHODS

A. Wiring Method: Install cables in raceways and cable trays except within consoles, cabinets, desks, and counters and except in accessible ceiling spaces and in gypsum board partitions where unenclosed wiring method may be used. Conceal raceway and cables except in unfinished spaces.

1. Install plenum cable in environmental air spaces, including plenum ceilings.
2. Comply with requirements for raceways and boxes specified in Section 26 0533 "Raceway and Boxes for Electrical Systems."

B. Wiring Method: Conceal conductors and cables in accessible ceilings, walls, and floors where possible.

C. Wiring within Enclosures: Bundle, lace, and train cables to terminal points with no excess and without exceeding manufacturer's limitations on bending radii. Provide and use lacing bars and distribution spools.

D. Support cables not enclosed in raceways on J-Hooks. Install, size, and space J-Hooks to comply with TIA/EIA-568-B.

3.3 ELECTRICAL CONNECTIONS

A. Make splices, taps, and terminations on numbered terminal strips in junction, pull, and outlet boxes; terminal cabinets; and equipment enclosures.

B. Use plug connectors for connections to clocks and signal devices.

C. Ground clocks, programming equipment, and conductor and cable shields to eliminate shock hazard and to minimize ground loops, common-mode returns, noise pickup, cross talk, and other impairments.

3.4 IDENTIFICATION

A. Comply with Section 26 0553 "Identification for Electrical Systems."

B. Color-code wires, and apply wire and cable marking tape to designate wires and cables so they are uniformly identified and coordinated with wiring diagrams throughout the system.

3.5 FIELD QUALITY CONTROL

A. Manufacturer's Field Service: Engage a factory-authorized service representative to inspect, test, and adjust components, assemblies, and equipment installation, including connections.

B. Perform tests and inspections.

1. Manufacturer's Field Service: Engage a factory-authorized service representative to inspect components, assemblies, and equipment installations, including connections, and to assist in testing.

C. Tests and Inspections:

1. Perform operational-system tests to verify compliance with the Specifications and make adjustments to bring system into compliance. Include operation of all modes of clock correction and all programming and manually programmed signal and relay operating functions.
2. Verify that units and controls are properly labeled and interconnecting wires and terminals are identified.

D. Clock system will be considered defective if it does not pass tests and inspections.

E. Prepare test and inspection reports.

3.6 ADJUSTING

A. Program system according to Owner's requirements. Set system so signal devices operate on Owner-required schedules and are activated for durations selected by Owner. Program equipment-control output circuits to suit Owner's operating schedule for equipment controlled.

B. Adjust sound-output level of adjustable signal devices to suit Owner's requirements.

C. Occupancy Adjustments: When requested within 12 months of date of Substantial Completion, provide on-site assistance in adjusting system to suit actual occupied conditions. Provide up to two visits to Project during other-than-normal occupancy hours for this purpose.

3.7 DEMONSTRATION

A. Train Owner's maintenance personnel to adjust, operate, and maintain clock-and-program-control system components.

END OF SECTION

SECTION 27 9000

DISTRIBUTION ANTENNA SYSTEM

PART 1 – GENERAL

1.1 SECTION INCLUDES:

A. Drawings and general provisions of the contract, including general and supplemental conditions apply to this section.

B. All materials, equipment, transportation, and labor necessary to achieve a complete and functional system.

C. The work of this section also includes:

1. Required licenses, insurance, and permits including payment of charges and fees.
2. Verification of dimensions and conditions at the job site.
3. Preparation of submittal information.
4. Pick-up of owner furnished equipment and incorporation into project.
5. Development and implementation of DAS equipment and rack layouts, which will become the property of the owner.
6. Installation in accordance with the contract document, manufacturer's recommendation, and in conformity with applicable codes and authority having jurisdiction.
7. Extension of electrical service, including ground, to equipment locations, if required.
8. Initial tests and adjustments, written report and documentation.
9. Instruction of operating personnel.
10. Provision of manuals.
11. Maintenance services and warranty.

1.2 RESPONSIBILITY

A. Supply accessories and minor equipment items needed for a complete system, even if not specifically mentioned in the specifications or on the associated drawings, without claims for additional payments.

B. Notwithstanding any detailed information in the Contract Documents, it is the responsibility of the Contractor to supply the DAS system in full working order. Notify the

architect of any discrepancies in part numbers or quantities before bid. Failing to provide such notification, supply items, and quantities according to the intent of the specifications and drawings, without claim for additional payment.

C. Execute all work in accordance with the National Electrical Code, the National Electrical Safety Code, the Occupational Safety and Health Act and all applicable State and Local Codes, ordinances, and regulations. If a conflict develops between the contract document and the appropriate codes and is reported to the Architect prior to bid opening, the Architect will prepare the necessary clarification. Where a conflict is reported after contract award, propose a resolution of the conflict and, upon approval, perform work.

1.3 RELATED WORK SPECIFIED ELSEWHERE

A. Access Points

B. Voice/data locations

C. Card Readers

D. Electrical Work, conduit, floor boxes, wall boxes, pull boxes, junction boxes, AC power circuits, and grounding wiring

E. Digital Signage

1.4 REFERENCES

A. Published specification standards, tests or recommended methods of trade, industry or government organizations apply to work in this section where sited below:

1. American National Safety Institute (ANSI)
2. American Society of Testing and Materials (ASTM)
3. Electronics Industries Association (EIA)
4. Federal Communications Commission (FCC)
5. National Electrical Manufacturer's Association (NEMA)
6. National Electric Code (NEC)
7. Underwriters Laboratories (UL)
8. Occupational Safety and Health Administration (OSHA)
9. Building Industry Consulting Service International (BICSI)
10. Tribal Employment Rights Ordinance (TERO) does not apply to this project

1.5 DESCRIPTIONS AND REQUIREMENTS

a. The DAS system shall provide total coverage for the Cherokee Health Facility including administrative offices and loading dock.

b. The DAS system shall be carrier format neutral and support every cellular carrier, independent of wireless frequencies and format used.

c. The DAS system and all its subsystems shall be designed to operate twentyfour (24) hours a day 365 days a year

d. Must be compatible with current (EVDO/EVDV/LTE/4G and UMTS) and new technologies, (for example 5G) as well as current re-banding efforts

e. Must not interfere with the CHEROKEE NATION 's local life safety (Police and Fire) frequencies - (800M Hz and 700MHz).

f. Must be maintained as technologies evolve and be able to expand the DAS system to accommodate additional interested carriers at later intervals.

g. Design must use (host-based) or (distributed) modular architecture

h. Prior to any installation, all antenna mounting locations are to be approved

1.5a Signal Coverage and Reliability

a. Active Signal Handling: The DAS system will have active (powered) elements that filter and amplify signals to consistently deliver wireless services at the appropriate power levels. The solution will support all requested services to ensure that each service (or carrier) has the ability to adjust and control power levels without disturbing other services.

b. RF Signal Coverage: At a minimum, for cellular and PCS coverage, the system must deliver signal strength of -85 dBm to -89 dBm (3 Bars) to 95% of the facility.

c. Fiber Optic Transport: The DAS system may utilize fiber optics to distribute signals within the vertical risers.

d. Broadband Distribution: The DAS will use Cat6 or coax cable in the horizontal runs to remote antenna units or directly to passive broadband antennas in the distribution area

e. Coverage Selectability: The DAS system will use a point-to-multipoint distribution architecture to provide different services and power levels across the facility.

f. Centralized Power: The DAS architecture will support either remote, centralized power or uninterrupted power supplies (UPS).

SNMP Integration: The DAS shall be SNMP compliant.

a. Centralized Management System: In the absence of an SNMP-based NMS system, the DAS must provide a centralized management system that provides a system-wide view of the in-building deployment.

b. End-to-End Visibility: The DAS management system will provide end-toend status information from the BDA/BTS to the remote-end including the antennas.

1.6 SUBMITTALS

A. Provide submittals in the quantities specified in the General requirements

B. Provide the following in one submission for approval within 30 days of issuance of Notice to Proceed and prior to commencement of work:

C. Provide an equipment list and manufacturers data sheet on products to be incorporated within the work specifications order. Submit bound originals of:

1. Manufacturers product technical date for each product in sufficient detail to facilitate proper evaluation of the suitability of the products for incorporation within the work

2. Each submittal shall include a unique number and be numbered in consecutive order

3. Provide a complete table of contents with the project title and number, submittal number, date of submission, referenced addendum or change order number as applicable.

4. Where a data-sheet shows more than one product, indicate the model being proposed with an arrow or another appropriate symbol.

5. Bind the submittal in titled three-ring D binders sized for 150 percent of the material. Maximize size, three-inch spine. Use multiple volumes as required. Separate major groupings with label binder tabs.

D. Shop Drawings

1. Schematic: Detailed wiring diagrams showing the interconnection of components and products, wiring and cabling diagrams depicting cable types and designators and device designators. Provide connector designations and terminal strip identification along with color codes for cables connecting to these devices. Give each component a unique designator and use this designator consistently throughout the project.

2. Equipment: Location of equipment in racks, in ceilings or on walls, with dimensions, wire routing, and cabling within housings, AC power outlets (if applicable) and terminal strip locations.

3. Full fabrication details of any custom enclosures and millwork indicating size, material, finish and openings for equipment.

4. Antenna mounting details, include hardware types and load capacity.

5. Fabricated mounting plates to include dimensioned locations of components, component types, plate material and color and bill of material.

6. Drawings executed at an appropriate scale, but not smaller than 1/8 inch = 1' foot.

7. Label equipment and use cabling labeling scheme. Include font sizes and styles, explanation of scheme and designator schedule.

8. Consultant's project documents in electronic format cannot be supplied to the contractor for their use as part of the submittals. Discuss with owner.

9. Contractor to provide wiring schedule showing source and destination of wiring and indicating which wiring is in conduit.

10. Contractor is to provide any other pertinent data which is necessary for a complete system.

E. Contract Close-Out Submittals

1. Submit four bound originals of the following Project Record Manual information after substantial completion but prior to final inspection.

2. This will include manufacturer's data sheets for each type of product by manufacturer and model or part number unless specified otherwise herein.

3. Supply manufacturer's serial numbers for each product

4. For custom modifications, a description of the purpose, capabilities, and operation on each item.

5. Manufacturer's maintenance and care instructions.

6. Separately bind list by manufacturer and model number of part number of products incorporated with the work, arranged in alphanumeric order. When applicable, bind manufacturer's warranty statements separately.

7. Record Drawings: Final rendition of shop drawings depicting what is incorporated within the work. Drawings are to be executed at an appropriate scale, but not smaller than 1/8 inch = 1'.

8. Test Reports: Recorded findings of Commissioning

9. System Operations and Instructions: Prepare a complete and typical procedure for the operation of the equipment as a system, organized by subsystem or activity, describe the operation of system capabilities, assume the intended reader of the manual to be technically inexperienced and unfamiliar with this facility/operation.

10. Maintenance Instructions: Include maintenance phone number(s) and hours, maintenance schedule, description of products recommended or provided for maintenance purposes, and instructions for the proper use of these products.

11. Contractor is to provide any other pertinent data which is necessary for a complete system.

12. Segregate documents into separate binders

13. Bind project record manual is titled three-ring D style binders.

14. Regarding re-submission requirements, make any requested corrections or changes in submittals required. Resubmit for review until no exceptions are taken. Indicate any changes that have been made other than those requested.

1.7 QUALITY ASSURANCE

A. Qualifications: Firm experienced in the provision of systems similar in complexity to those required for this specific project must meet the following: No less than three years' experience in equipment and systems of the specified types, experience with at least three comparable scale projects within the last two years, be a fully franchised dealer and service

facility for the manufacturer's products furnished, maintain a fully staffed and equipped service facility with full-time field technicians, have at least one supervisory employee having completed and certified (where applicable) and proof is to be supplied as a submittal item. At the request of the owner, demonstrate that adequate plant and equipment are available to complete the work and adequate staff with commensurate experience and technical expertise is available.

B. Work: Perform work in compliance with the applicable standards listed herein and governing codes and regulations of the authorities having jurisdiction and the Contract documents. Drawings and specification requirements govern where they exceed Code and Regulation requirements. Where requirements between governing Codes and Regulations vary, the more restrictive provision applies. Nothing in the Contract documents grants authority or permission to disregard or violate any legal requirements.

C. Coordinate exact location and installation of equipment, power, grounding and raceway requirements with the Architect.

1.8 DELIVERY, STORAGE, AND HANDLING

A. Ship products in its original container to prevent damaging or entrance of foreign matter.

B. Handling and shipping in accordance with manufacturer's recommendation.

C. Provide protective covering during construction to prevent damaging or entrance of foreign matter

D. Replace at no expense to owner, products damaged during storage, handling or the course of construction.

1.9 PROJECT CONDITIONS

A. Verify conditions on the job site applicable to this work. Notify Architect in writing of discrepancies, conflicts or omissions promptly upon discovery.

B. The drawings diagrammatically show cabling and arrangements of equipment fitting the space available without interference. If conditions exist which make it impossible to install work as shown, recommend solutions and/or submit drawings to the Architect for approval, showing how the work should be installed.

1.10 WARRANTY

A. Warrant labor and products for one year following the date of substantial completion to be free of defects and deficiencies and to conform to the drawings and specifications as to kind, quality, function and characteristics. Repair or replace defects occurring in labor or products within the warranty period without charge.

B. This warranty is in addition to any specific warranties issued by the manufacturers for greater periods of time.

C. Within the warranty period, answer service calls within eight (8) hours and correct the deficiency within forty-eight (48) hours.

D. Provide owner with the name and telephone number of the person to call for service. This information is to be a part of the project record drawings.

E. Thirty days prior to the end of the warranty period, provide a complete checkout of all system components. Repair or replace any defective equipment discovered during the testing. Correct any defects in writing or other functional problems reported to the owner. Warranty replacement and service of equipment shall not apply to owner furnished equipment (OFE). Coordinate inspection visits with the owner.

PART 2 – PRODUCTS

2.1 ACCEPTABLE MANUFACTURERS

A. Model numbers and manufacturers included in this specification are listed as a standard of function, performance, and quality.

B. Refer to General and Supplementary Conditions and Division I Specifications Section for equipment substitution procedure.

2.2 GENERAL

A. Products quantity is as required. If a quantity is given, provide a least the given amount.

B. Products shall be new, free from defects and listed by UL when applicable UL standards exist. Provide products of a given type from one manufacturer.

C. Regardless of the length or completeness of the descriptive paragraph herein, provide products complying with the specified manufacturer's published specifications.

D. Take care during installation to prevent scratches, dents, chips, etc.

2.3 MANUFACTURER AND PRODUCTS

A. If a specified product has been discontinued by a manufacturer, provide the replacement model (as certified by the manufacturer) at no additional charge to the owner.

B. Provide manufacturer's latest offerings assuming the products are not in alpha or beta testing and fully available to the general marketplace.

2.4 Constructions Standards

All construction Standards shall be followed. An extensive approval process is required prior to any installations. The selected contractor is responsible for all permits, licenses, certificates, TERO (if applicable) and authorizations for construction activities. Construction activity may be dictated by other trades completing the facility.

2.5 Codes

2.2.1 Mandatory Code Compliance:

National Electric Safety Code (National Bureau of Standards)
National Electrical Code (National Bureau of Fire Underwriters)
Applicable FCC and other applicable federal, state and local regulations and ordinances.

The installation, operation or maintenance of the system shall not endanger or interfere with the safety of persons or property located at the facility.

2.6 Macro/Micro Sites/Pico

2.3.1 A good design will minimize the equipment that would be placed or mounted internally on building structures and in any publicly visible location.

2.6.1 Demarcation

2.6.2 The contractor will establish a clearly labeled point of demarcation at each site.

2.6.3 The contractor's technicians will provide fiber optic cable to extend from the host DEMARC to head-end or distributed equipment.

2.7 Fixtures

2.7.1 Fixtures will not be placed in locations that will interfere with gas, electric, steam, fixtures, water other fixtures the owner deems as having priority.

2.7.2 Aesthetics - use of stealth antennas and antennas that blend into the building architecture is highly recommended.

2.7.3 Indoor antennas shall be low profile, flush-mount types suitable for suspended ceilings or walls and shall be of a multi-band configuration. It is acceptable to surface mount antennas in an open ceiling environment and to install surface mount antennas to walls, near ceiling height.

2.7.4 Prior to any installation, all antenna mounting locations are to be approved by the owner.

2.8 Access

2.8.1 The selected contractor will be dependent on the owner for facility access. The owner maintains will coordinate as required.

2.9 Renovations

2.9.1 When the owner undertakes building improvements which affect the DAS, the owner may direct the contractor to remove or relocate its wires, conduits, cables and other property located in the facility.

2.10 IMPLEMENTATION & PROJECT PLAN

2.11 The Contractor will coordinate all activity and hardware installation that affects the use of fiber, conduit, and cable tray with the owner.

2.12 Implementation & Project plans must include:

Timeline to include:

Planning, installation, testing and other major milestones associated with the project

Milestones at which the owner must be engaged to provide support, the type of support required, the length of time estimated will be required of the owner resources.

Project plan to include:

i) Design drawings

ii) Additional surveys to develop the design must be obtained at Contractors expense.

iii) Contractor will provide layout of the network design

Should such final design, in the owner's judgment, deviate from the bid in a manner that constitutes any hardship for the owner, the owner reserves the right to terminate without cost or cause any contract resulting from this procurement.

Installation acceptance:

The DAS system will be approved and accepted by the owner within one week of Contractor's notification for completion.

Final 'as-built' drawings are to be submitted to the owner within one (1) week of completion and acceptance.

2.13 CABLING

See cable types on drawings

2.14 EQUIPMENT RACK

A. Equipment Housing

1. Fully welded construction, open sides
2. 14-gauge steel tops and bottoms
3. EIA/TIA frame
4. Drilled and tapped mounting rails
5. Black powder coat finish
6. Acceptable Product
   a. Middle Atlantic or equivalent

2.15 OTHER ITEMS

Color coordinate Antennas—If visible, paint according to architect interior designs scheme and ensure warranty is not impacted.

PART 3 - EXECUTION

3.1 GENERAL

A. Coordinate incorporation of the work specified herein with another project work so as to facilitate a cohesive final product.

B. The installation recommendations contained within ASDI and Telecommunications Distribution Methods Manual are mandatory minimum standards and requirements.

C. Mount equipment and enclosures plumb and level.

D. Permanently installed equipment to be firmly and safely held in place. Design equipment supports to support loads imposed with a safety factor of at least five. Seismic bracing shall be installed on appropriate equipment where local codes require such installation.

E. Verify all locations of equipment in all rooms with owner's representative, the owner, and consultant.

3.2 INSTALLATION

A. Install all equipment and systems according to manufacturer's specifications

B. Ensure contractor complies with all state and local building codes and ordinances

3.3 LABELING OF EQUIPMENT

A. Provide each terminal strip with a unique descriptor and a numerical designator for each terminal. Show terminal strip descriptor and designator on system schematic drawings.

B. Provide logical and legible cable and wiring label permanently affixed for easy identification

3.4 ENGRAVING

A. Text font: 1/8-inch block sans serif characters unless noted otherwise

B. On dark material, provide white characters, on stainless steel or brushed natural aluminum plates, or light-colored materials, provide black characters.

C. Provide at least two lines of text with first-line listing the general device name, e.g. amplifier. The second line is to include schematic reference of the device, e.g. AMP-1.

D. Equipment label: black and white characters except where indicated.

3.5 COMMISSIONING

A. Ensure the following prior to energizing or testing the system:

B. All products are installed in proper and safe manner according to manufacturer's instructions.

C. Shrink tubing are present where required.

D. Dust, debris, solder splatter, etc. is removed.

E. Cable is dressed, routed, and labeled; connections are consistent with regard to polarity.

F. Labeling has been provided.

G. Temporary facilities and utilities have been properly disconnected, removed and disposed of off-site.

H. Products are neat, clean and unmarred and parts securely attached.

I. Broken work, including glass, raised flooring and supports, ceiling tiles and supports walls, doors, etc. have been placed or properly repaired, and debris cleaned up and discarded.

J. Electronic devices are properly grounded.

K. Test each AC power receptacle with a circuit checker for proper hot, neutral and ground connections.

L. Measure and record the DC resistance between the technical ground in any equipment rack or console and the main building ground. Resistance should be 0.15 ohms or less.

3.6 FINAL INSPECTION AND TESTING

A. Upon completion of installation, final inspection and test will be observed by the owner no earlier than two weeks after receipt of the written results.

B. Provide a minimum of (1) person for inspection and (1) person for testing familiar with aspects of the system to assist the owner.

C. The process of testing the system may necessitate moving and adjusting certain components.

D. Testing includes operation of each major system and any other components deemed necessary. Perform tests and provide required test equipment, tools, and material required to make any necessary repairs, corrections and/or adjustments.

3.7 TESTING

A. Thirty days prior to start of testing, provide a list to the owner of test equipment make, model, numbers and calibration dates that will be used.

B. The following equipment and systems shall be available on-site for the entire test period through final system testing:

1. Power
2. Spectrum
3. Thermal Imaging
4. RF
5. Terminations
6. Interference
7. Optimal antenna placement verification
8. Mobile Apps
9. OTDR

10. Cell/Advisor Base Station Analyzer

11. T-BERD MTS-2000 or equal

12. Smart Class Fiber with P-5000 Microscope

13. Certifier 40G or equal

3.8 INSTRUCTION OF OWNER PERSONNEL

A. Provide 2 hours instruction to owner designated personnel focusing on the use, operation and maintenance of the systems, scheduled as a minimum of two separate sessions, by an instructor fully knowledgeable and qualified in system operation. The system Reference Manuals should be complete and on-site at the time of this instruction. Coordinate schedule of demonstration with owner's representative.

3.8 CLEANUP AND REPAIR

A. Upon completion of the work, remove refuse and rubbish from and about the premises. Leave areas and equipment clean and in an operational state. Repair any damage caused to the premises by the installation of systems at no cost to the owner.

END OF DOCUMENT

Equipment List Report

Project name: Cherokee Nation/OSU
Project creation date: 8/23/2019
Design company: Networks West Technology Firm
Designer:

Type	Manufacturer	Model	Description	Inventory#	Qty
Antenna	CommScope	CMAX-O-43-WV53	Cell-Max™ Low PIM Omni In-building Antenna, 698–6000 MHz	N/A	25
Cable	Generic	LC-APC Duplex Pigtail	Pigtail Duplex LC-APC, 2 fiber, 1m	N/A	25
Cable	Corning	HR1818H4C06U8A3150F-PN	Composite cable, 6F/4Cu, 16 AWG, with Cu connectors, LCAPC-LCAPC, Armored indoor plenum, one-sided pulling grip, no kit, 150 ft	N/A	2
Cable	Corning	HR1818H4C06U8A3100F-PN	Composite cable, 6F/4Cu, 16 AWG, with Cu connectors, LCAPC-LCAPC, Armored indoor plenum, one-sided pulling grip, no kit, 100 ft	N/A	2
Cable	Corning	HR1818H4C06U8A3070F-PN	Composite cable, 6F/4Cu, 16 AWG, with Cu connectors, LCAPC-LCAPC, Armored indoor plenum, one-sided pulling grip, no kit, 70 ft	N/A	2
Cable	Corning	HR1818H4C06U8A3080F-PN	Composite cable, 6F/4Cu, 16 AWG, with Cu connectors, LCAPC-LCAPC, Armored indoor plenum, one-sided pulling grip, no kit, 80 ft	N/A	1
Cable	Corning	024E81-33131-A1	Fiber, 24f, MIC Riser Armored, SMFe	N/A	767.36 feet
Cable	Corning	ERFC16	1.3 dB Jumper - Connect HEU - OIU, Extender RF Cable 16 in	N/A	1
Cable	CommScope	PTS1P-QMHM-1M-P	PTS1-50-P SureFlex® Jumper with interace types 4.3-10 Male and QMA Male, 1m	N/A	25
Cable	CommScope	PTS1P-BTS FEEDER-5M-P	PTS1-50-P SureFlex® Jumper for BTS, Connectors Open, 5m	N/A	35
Cable	Corning	HR1818H4C06U8A3270F-PN	Composite cable, 6F/4Cu, 16 AWG, with Cu connectors, LCAPC-LCAPC, Armored indoor plenum, one-sided pulling grip, no kit, 270 ft	N/A	1
Cable	Corning	HR1818H4C06U8A3190F-PN	Composite cable, 6F/4Cu, 16 AWG, with Cu connectors, LCAPC-LCAPC, Armored indoor plenum, one-sided pulling grip, no kit, 190 ft	N/A	2

Type	Manufacturer	Model	Description	Inventory#	Qty
Cable	Corning	HR1818H4C06U8A3200F-PN	Composite cable, 6F/4Cu, 16 AWG, with Cu connectors, LCAPC-LCAPC, Armored indoor plenum, one-sided pulling grip, no kit, 200 ft	N/A	1
Cable	Corning	HR1818H4C06U8A3050F-PN	Composite cable, 6F/4Cu, 16 AWG, with Cu connectors, LCAPC-LCAPC, Armored indoor plenum, one-sided pulling grip, no kit, 50 ft	N/A	2
Cable	Corning	HR1818H4C06U8A3130F-PN	Composite cable, 6F/4Cu, 16 AWG, with Cu connectors, LCAPC-LCAPC, Armored indoor plenum, one-sided pulling grip, no kit, 130 ft	N/A	2
Cable	Corning	HR1818H4C06U8A3250F-PN	Composite cable, 6F/4Cu, 16 AWG, with Cu connectors, LCAPC-LCAPC, Armored indoor plenum, one-sided pulling grip, no kit, 250 ft	N/A	1
Cable	Corning	HR1818H4C06U8A3020F-PN	Composite cable, 6F/4Cu, 16 AWG, with Cu connectors, LCAPC-LCAPC, Armored indoor plenum, one-sided pulling grip, no kit, 20 ft	N/A	1
Cable	Corning	HR1818H4C06U8A3220F-PN	Composite cable, 6F/4Cu, 16 AWG, with Cu connectors, LCAPC-LCAPC, Armored indoor plenum, one-sided pulling grip, no kit, 220 ft	N/A	2
Cable	Corning	HR1818H4C06U8A3280F-PN	Composite cable, 6F/4Cu, 16 AWG, with Cu connectors, LCAPC-LCAPC, Armored indoor plenum, one-sided pulling grip, no kit, 280 ft	N/A	1
Cable	Corning	HR1818H4C06U8A3210F-PN	Composite cable, 6F/4Cu, 16 AWG, with Cu connectors, LCAPC-LCAPC, Armored indoor plenum, one-sided pulling grip, no kit, 210 ft	N/A	1
Cable	Corning	HR1818H4C06U8A3110F-PN	Composite cable, 6F/4Cu, 16 AWG, with Cu connectors, LCAPC-LCAPC, Armored indoor plenum, one-sided pulling grip, no kit, 110 ft	N/A	2
Cable	Corning	HR1818H4C06U8A3140F-PN	Composite cable, 6F/4Cu, 16 AWG, with Cu connectors, LCAPC-LCAPC, Armored indoor plenum, one-sided pulling grip, no kit, 140 ft	N/A	2
Connector	Generic	LC-APC Duplex	Duplex Fiber Optic Connector LC-APC	N/A	57
Fiber BDA Hub	Corning	OIM-LC	(ONE) Optical Interface Module	N/A	9

Type	Manufacturer	Model	Description	Inventory#	Qty
Filter	Corning	RIM-L70	Radio Interface Module for LTE	N/A	2
Filter	Corning	RIM-C85	Radio Interface Module for CELL 850 MHz	N/A	2
Filter	Corning	RIM-P19	Radio Interface Module for PCS 1900 MHz	N/A	4
Filter	Corning	RIM-A17	Radio Interface Module for AWS	N/A	3
Filter	Corning	RIM-2500	Radio Interface Module for 2500 MHz	N/A	1
Filter	Sym Technology	S1900 (1900 MHz PCS RF Card)	Active SPOI RF Interface Card. 1900 MHz PCS Block (UL: 1850-1915 MHz / DL: 1930-1995 MHz) - Jumpered for up to +38 dBm	N/A	4
Filter	Sym Technology	S700 (700 MHz Upper C LTE RF Card)	Active SPOI RF Interface Card. 700 MHz LTE Upper C Block (UL: 776-787 MHz / DL: 746-757 MHz) - Jumpered for up to +38 dBm	N/A	1
Filter	Sym Technology	S2600 (2600 MHz BRS TDD RF Card)	Active SPOI TDD RF Interface Card. 2600 MHz BRS Block. Jumpered for up to +38dBm. !!! The Gain parameter defined refers to the RX AMP status. When the RX AMP is ON, the Gain should be set to 12.5dB, thus the Insertion loss in UL (RX) will become 0dB. Default setting: RX AMP is OFF, Gain	N/A	1
Filter	Sym Technology	S2100 (2100 MHz AWS RF Card)	Active SPOI RF Interface Card. 2100 MHz AWS Block (UL: 1710-1755 MHz / DL: 2110-2155 MHz) - Jumpered for up to +38 dBm	N/A	3
Filter	Sym Technology	S850 (850 MHz Cellular RF Card)	Active SPOI RF Interface Card. 850 MHz Cellular Block (UL: 824-849 MHz / DL: 869-894 MHz) - Jumpered for up to +38 dBm	N/A	2
Filter	Sym Technology	S700L (700 MHz Lower ABC LTE RF Card)	Active SPOI RF Interface Card. 700 MHz LTE Lower ABC Block (UL: 698-716 MHz / DL: 728-746 MHz) - Jumpered for up to +38 dBm	N/A	1
Filter	Corning	CCH-CP24-B3	24-Fiber CCH Panel LCAPC FRONT/BACK	N/A	6

Type	Manufacturer	Model	Description	Inventory#	Qty
Media Converter	Corning	RXU-2325	RxU Expansion Unit to support both WCS 2.3 GHz and 2.5 GHz TDD bands. Compatible with RAU4, RAU5US and RAU5xUS. Rev. 2	N/A	25
Media Converter	Corning	RAU5XUS	[ONE] Radio Access Unit, ESMR 800/ Cell 850/ 700 LTE/ PCS 1900 / AWS+AWS3 2100MHz	N/A	25
Miscellaneous	Corning	CCH-01U	Closet Connector Housing (CCH), 1 rack units, holds 2 CCH Connector Panels	N/A	2
Miscellaneous	Corning	PWH-02P	Plug & Play, Wall Mount Housing, Holds 2 Modules	N/A	3
Miscellaneous	Sym Technology	SP-MFC	ASPOI Subrack and Controller Module - 19" Rack / 4U Height / -48VDC Power / FAN / Support up to 8 RF Cards	N/A	2
Miscellaneous	Corning	HEU-2-11-2-A-H	(ONE) Head End Unit, 12 RIM input Slots, 4 o/p to OIU, Rack Mount, Both Long and Short cables, AC power and loaded with an HCM and 2 Power Supply Modules	N/A	1
Miscellaneous	Corning	OIU-2-00-2-A-A	Optical Inerface Unit (OIU), 2-OIX, 2-PSM-AC, 1-ACM	N/A	1

B

VZW
700 MHz
LTE
Sector 1
Nb. of ch.:1

VZW
850 MHz - Cellular
LTE
Sector 1
Nb. of ch.:1

VZW
1900 MHz - PCS
LTE
Sector 1
Nb. of ch.:1

VZW
2100 MHz - AWS
LTE
Sector 1
Nb. of ch.:1

AT&T
700 MHz
LTE
Sector 1
Nb. of ch.:1

AT&T
850 MHz - Cellular
LTE
Sector 1
Nb. of ch.:1

AT&T
1900 MHz - PCS
LTE
Sector 1
Nb. of ch.:1

AT&T
2100 MHz - AWS
LTE
Sector 1
Nb. of ch.:1

TMO
1900 MHz - PCS
LTE
Sector 1
Nb. of ch.:1

TMO
2100 MHz - AWS
LTE
Sector 1
Nb. of ch.:1

Sprint
1900 MHz - PCS
LTE
Sector 1
Nb. of ch.:1

Sprint
2.6 GHz
LTE
Sector 1
Nb. of ch.:1

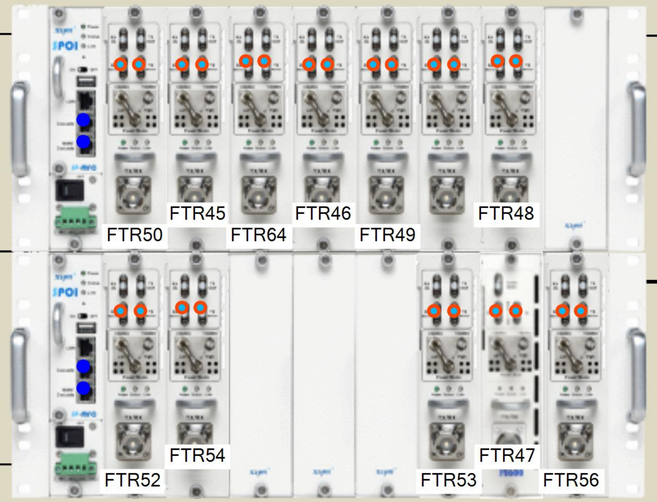

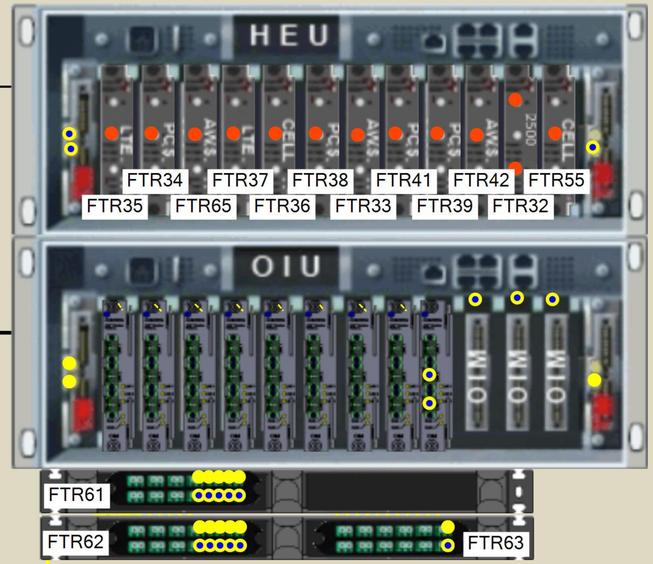

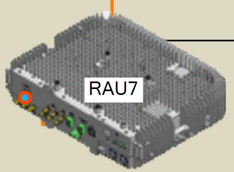

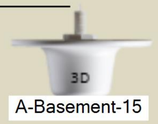

A-Basement-15

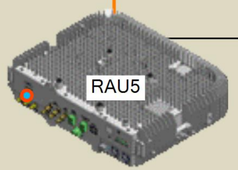

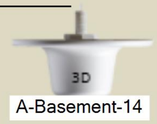

A-Basement-14

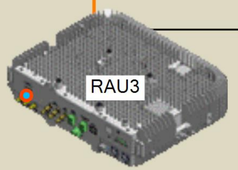

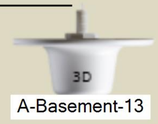

A-Basement-13

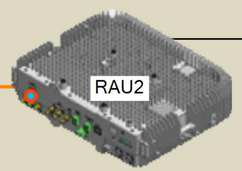

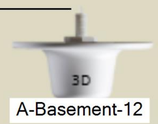

A-Basement-12

SHEET NOTES:

Install (1) 24 strand single mode fiber optic cable from MDF Room B018 to IDF Room 1008

Install (1) 24 strand single mode fiber optic cable from MDF Room B018 to IDF Room 2005

Install (1) 24 strand single mode fiber optic cable from MDF Room B018 to IDF Room 3005

Systems information legend
AT&T / 700 MHz - LTE / 1 Sectors
AT&T / 850 MHz - Cellular - LTE / 1 Sectors
AT&T / 1900 MHz - PCS - LTE / 1 Sectors
AT&T / 2100 MHz - AWS - LTE / 1 Sectors
Sprint / 1900 MHz - PCS - LTE / 1 Sectors
Sprint / 2.6 GHz - LTE / 1 Sectors
TMO / 1900 MHz - PCS - LTE / 1 Sectors
TMO / 2100 MHz - AWS - LTE / 1 Sectors
VZW / 700 MHz - LTE / 1 Sectors
VZW / 850 MHz - Cellular - LTE / 1 Sectors
VZW / 1900 MHz - PCS - LTE / 1 Sectors
VZW / 2100 MHz - AWS - LTE / 1 Sectors

Cables legend
024E81-33131-A1
Dummy Jumper -Connect RIM - HEU, RAU - RXU
Dummy OIM - OIU Jumperr
ERFC16
HR1818H4C06U8A3020F-PN
HR1818H4C06U8A3050F-PN
HR1818H4C06U8A3070F-PN
HR1818H4C06U8A3080F-PN
HR1818H4C06U8A3100F-PN
HR1818H4C06U8A3110F-PN
HR1818H4C06U8A3130F-PN
HR1818H4C06U8A3140F-PN
HR1818H4C06U8A3150F-PN
HR1818H4C06U8A3190F-PN
HR1818H4C06U8A3200F-PN
HR1818H4C06U8A3210F-PN
HR1818H4C06U8A3220F-PN
HR1818H4C06U8A3250F-PN
HR1818H4C06U8A3270F-PN
HR1818H4C06U8A3280F-PN
LC-APC Duplex Pigtail
PTS1P-BTS FEEDER-5M-P
PTS1P-QMHM-1M-P

Calculations legend
AT&T - 700 MHz - LTE
AT&T - 850 MHz - Cellular - LTE
AT&T - 1900 MHz - PCS - LTE
AT&T - 2100 MHz - AWS - LTE
Sprint - 1900 MHz - PCS - LTE
Sprint - 2.6 GHz - LTE
TMO - 1900 MHz - PCS - LTE
TMO - 2100 MHz - AWS - LTE
VZW - 700 MHz - LTE
VZW - 850 MHz - Cellular - LTE
VZW - 1900 MHz - PCS - LTE
VZW - 2100 MHz - AWS - LTE

Revision history

Project name

Cherokee Nation Com

Designer name

Plan name

Design plan

100 Bliss Ave
Tahlequah, OK 74464
Lat: 35.909992°
Long: -94.950758°
Elev: 910 Ft.

8/23/2019

F1

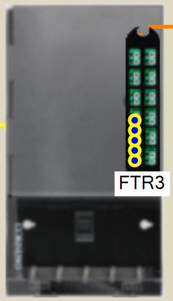

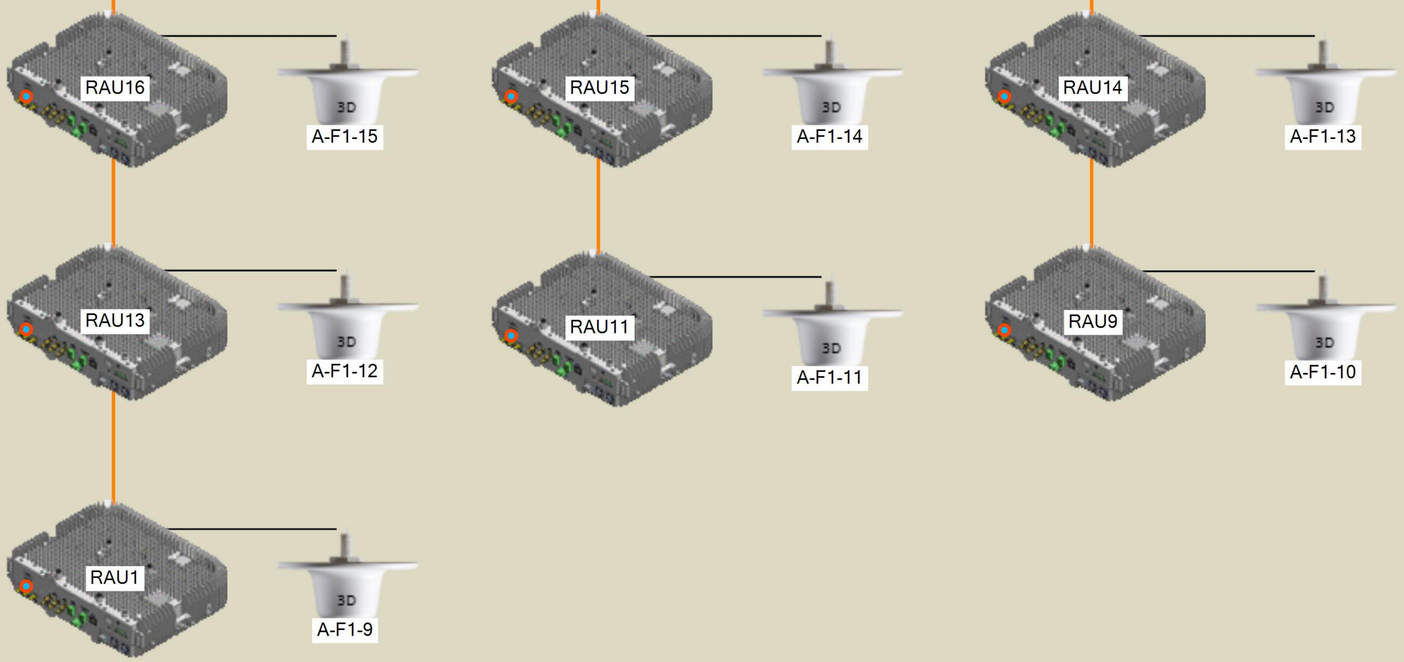

Systems information legend
AT&T / 700 MHz - LTE / 1 Sectors
AT&T / 850 MHz - Cellular - LTE / 1 Sectors
AT&T / 1900 MHz - PCS - LTE / 1 Sectors
AT&T / 2100 MHz - AWS - LTE / 1 Sectors
Sprint / 1900 MHz - PCS - LTE / 1 Sectors
Sprint / 2.6 GHz - LTE / 1 Sectors
TMO / 1900 MHz - PCS - LTE / 1 Sectors
TMO / 2100 MHz - AWS - LTE / 1 Sectors
VZW / 700 MHz - LTE / 1 Sectors
VZW / 850 MHz - Cellular - LTE / 1 Sectors
VZW / 1900 MHz - PCS - LTE / 1 Sectors
VZW / 2100 MHz - AWS - LTE / 1 Sectors

Calculations legend
AT&T - 700 MHz - LTE
AT&T - 850 MHz - Cellular - LTE
AT&T - 1900 MHz - PCS - LTE
AT&T - 2100 MHz - AWS - LTE
Sprint - 1900 MHz - PCS - LTE
Sprint - 2.6 GHz - LTE
TMO - 1900 MHz - PCS - LTE
TMO - 2100 MHz - AWS - LTE
VZW - 700 MHz - LTE
VZW - 850 MHz - Cellular - LTE
VZW - 1900 MHz - PCS - LTE
VZW - 2100 MHz - AWS - LTE

F2

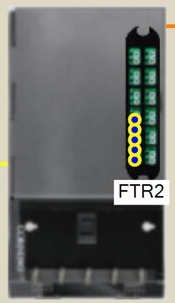

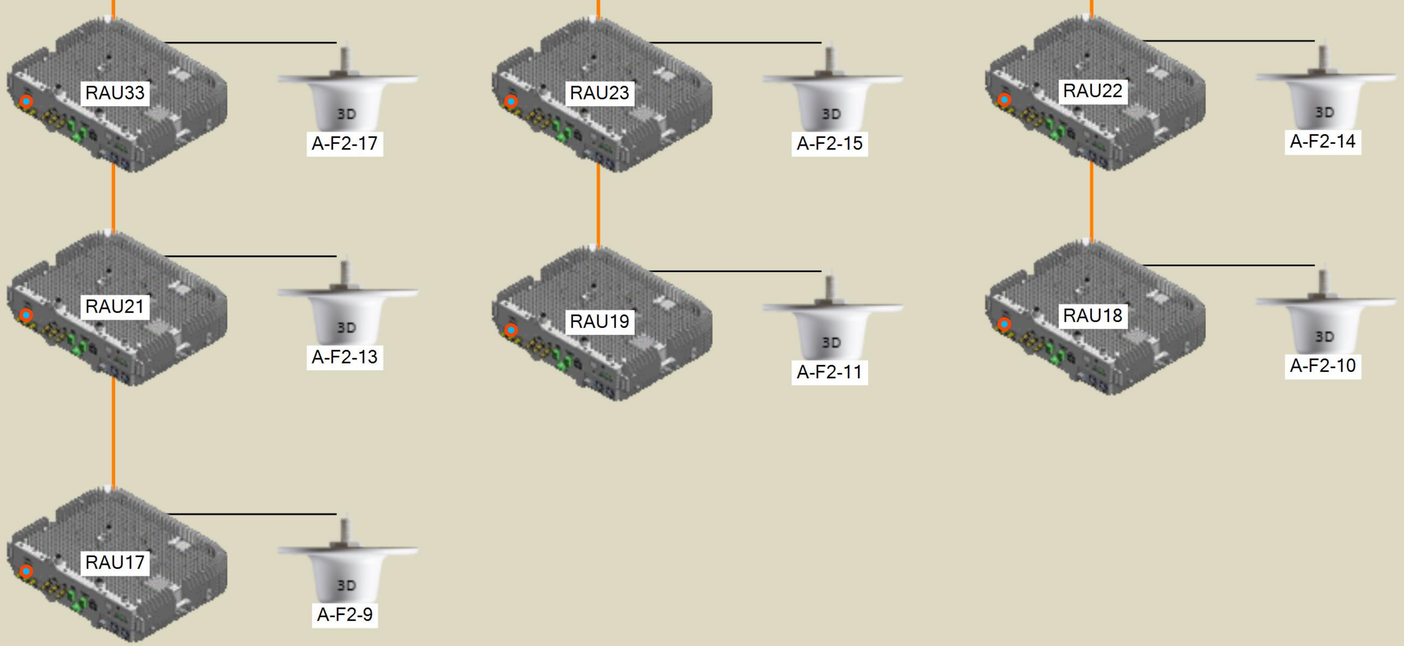

Cables legend
024E81-33131-A1
Dummy Jumper -Connect RIM - HEU, RAU - RXU
Dummy OIM - OIU Jumperr
ERFC16
HR1818H4C06U8A3020F-PN
HR1818H4C06U8A3050F-PN
HR1818H4C06U8A3070F-PN
HR1818H4C06U8A3080F-PN
HR1818H4C06U8A3100F-PN
HR1818H4C06U8A3110F-PN
HR1818H4C06U8A3130F-PN
HR1818H4C06U8A3140F-PN
HR1818H4C06U8A3150F-PN
HR1818H4C06U8A3190F-PN
HR1818H4C06U8A3200F-PN
HR1818H4C06U8A3210F-PN
HR1818H4C06U8A3220F-PN
HR1818H4C06U8A3250F-PN
HR1818H4C06U8A3270F-PN
HR1818H4C06U8A3280F-PN
LC-APC Duplex Pigtail
PTS1P-BTS FEEDER-5M-P
PTS1P-QMHM-1M-P

Revision history

Project name

Cherokee Nation Com

Designer name

Plan name

Design plan

100 Bliss Ave
Tahlequah, OK 74464
Lat: 35.909992°
Long: -94.950758°
Elev: 910 Ft.

8/23/2019

F3

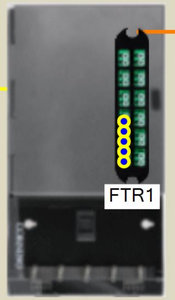

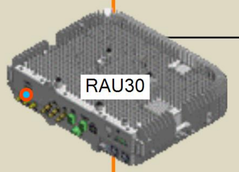

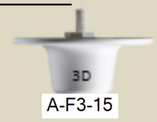

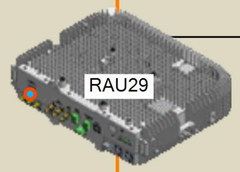

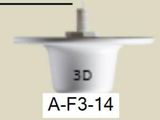

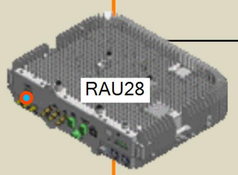

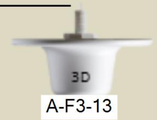

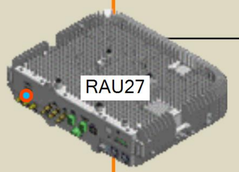

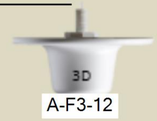

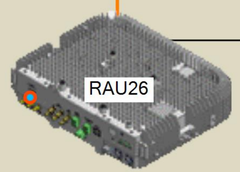

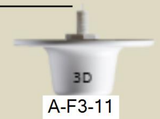

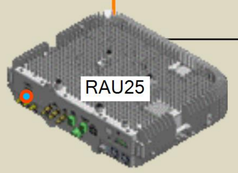

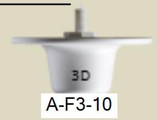

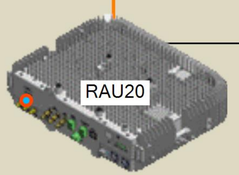

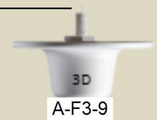

Systems information legend
AT&T / 700 MHz - LTE / 1 Sectors
AT&T / 850 MHz - Cellular - LTE / 1 Sectors
AT&T / 1900 MHz - PCS - LTE / 1 Sectors
AT&T / 2100 MHz - AWS - LTE / 1 Sectors
Sprint / 1900 MHz - PCS - LTE / 1 Sectors
Sprint / 2.6 GHz - LTE / 1 Sectors
TMO / 1900 MHz - PCS - LTE / 1 Sectors
TMO / 2100 MHz - AWS - LTE / 1 Sectors
VZW / 700 MHz - LTE / 1 Sectors
VZW / 850 MHz - Cellular - LTE / 1 Sectors
VZW / 1900 MHz - PCS - LTE / 1 Sectors
VZW / 2100 MHz - AWS - LTE / 1 Sectors

Cables legend
024E81-33131-A1
Dummy Jumper -Connect RIM - HEU, RAU - RXU
Dummy OIM - OIU Jumperr
ERFC16
HR1818H4C06U8A3020F-PN
HR1818H4C06U8A3050F-PN
HR1818H4C06U8A3070F-PN
HR1818H4C06U8A3080F-PN
HR1818H4C06U8A3100F-PN
HR1818H4C06U8A3110F-PN
HR1818H4C06U8A3130F-PN
HR1818H4C06U8A3140F-PN
HR1818H4C06U8A3150F-PN
HR1818H4C06U8A3190F-PN
HR1818H4C06U8A3200F-PN
HR1818H4C06U8A3210F-PN
HR1818H4C06U8A3220F-PN
HR1818H4C06U8A3250F-PN
HR1818H4C06U8A3270F-PN
HR1818H4C06U8A3280F-PN
LC-APC Duplex Pigtail
PTS1P-BTS FEEDER-5M-P
PTS1P-QMHM-1M-P

Calculations legend
AT&T - 700 MHz - LTE
AT&T - 850 MHz - Cellular - LTE
AT&T - 1900 MHz - PCS - LTE
AT&T - 2100 MHz - AWS - LTE
Sprint - 1900 MHz - PCS - LTE
Sprint - 2.6 GHz - LTE
TMO - 1900 MHz - PCS - LTE
TMO - 2100 MHz - AWS - LTE
VZW - 700 MHz - LTE
VZW - 850 MHz - Cellular - LTE
VZW - 1900 MHz - PCS - LTE
VZW - 2100 MHz - AWS - LTE

Revision history

Project name

Cherokee Nation Com

Designer name

Plan name

Design plan

100 Bliss Ave
Tahlequah, OK 74464
Lat: 35.909992°
Long: -94.950758°
Elev: 910 Ft.

8/23/2019

Materials legend

- Concrete [Heavy] (Brown graveled)
- Concrete [Heavy] Gray
- Concrete [Heavy]
- Drywall (Textured)
- Elevator Bank Metal LL
- Plaster Board / Sheetrock [Heavy]
- Window Indoor LL

- Concrete [Heavy]
- Elevator Bank Metal LL
- Plaster Board / Sheetrock [Heavy]

Cables legend

- 024E81-33131-A1
- Dummy Jumper -Connect RIM - HEU, RAU - RXU
- Dummy OIM - OIU Jumperr
- ERFC16
- HR1818H4C06U8A3070F-PN
- HR1818H4C06U8A3080F-PN
- HR1818H4C06U8A3100F-PN
- HR1818H4C06U8A3150F-PN
- LC-APC Duplex Pigtail
- PTS1P-BTS FEEDER-5M-P
- PTS1P-QMHM-1M-P

Pictograms legend

- Antenna
- BTS
- Fiber BDA Hub
- Filter
- Media Converter
- Miscellaneous
- Riser

Indoor prediction legend

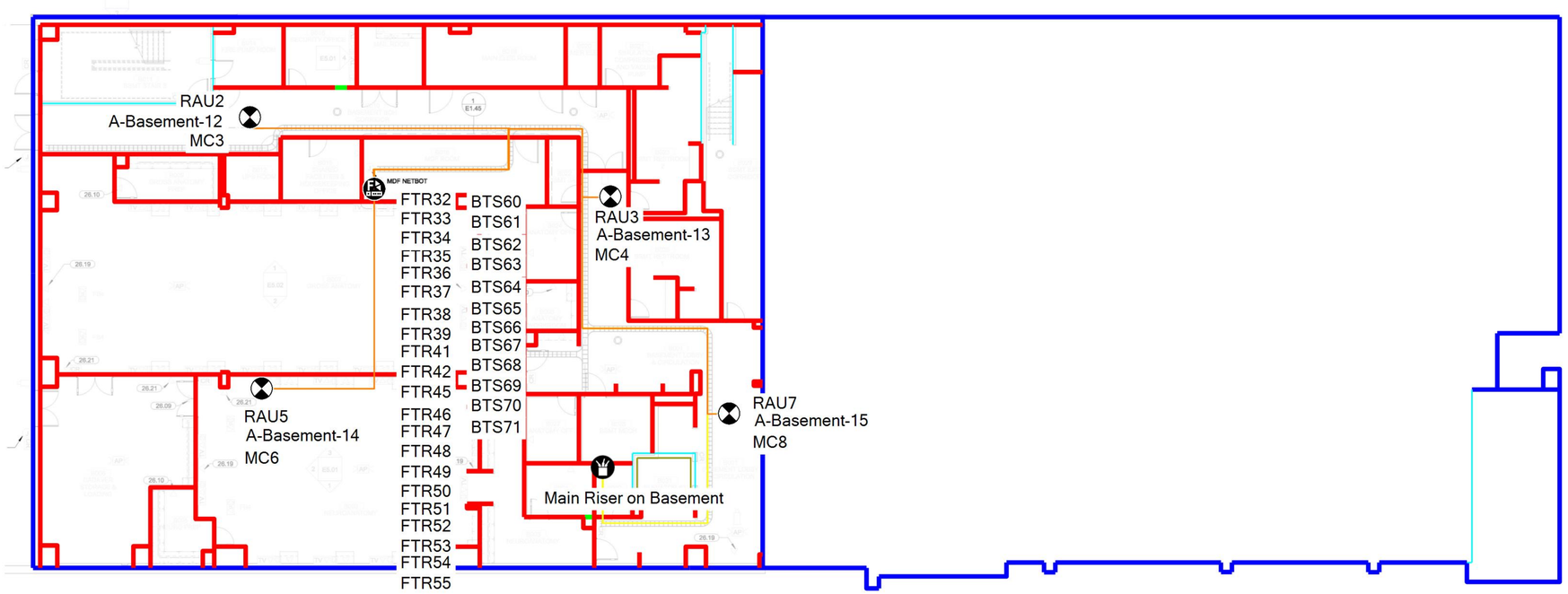

11,000 SF

50.00 ft

N

	Title: Basement Cherokee Nation Com	Designer:
	Company:	Date: 8/23/2019

Materials legend

- Black Railing NEW
- Concrete [Heavy] (Brown graveled)
- Concrete [Heavy] Gray
- Concrete [Heavy]
- Drywall (Textured)
- Elevator Bank Metal LL
- Glass Window
- Plaster Board / Sheetrock [Heavy]
- Window Indoor LL

- Concrete [Heavy]
- Elevator Bank Metal LL
- Plaster Board / Sheetrock [Heavy]

Cables legend

- 024E81-33131-A1
- Dummy Jumper -Connect RIM - HEU, RAU - RXU
- HR1818H4C06U8A3050F-PN
- HR1818H4C06U8A3110F-PN
- HR1818H4C06U8A3130F-PN
- HR1818H4C06U8A3140F-PN
- HR1818H4C06U8A3190F-PN
- HR1818H4C06U8A3210F-PN
- HR1818H4C06U8A3280F-PN
- PTS1P-QMHM-1M-P

Pictograms legend

- Antenna
- Filter
- Media Converter
- Riser

Indoor prediction legend

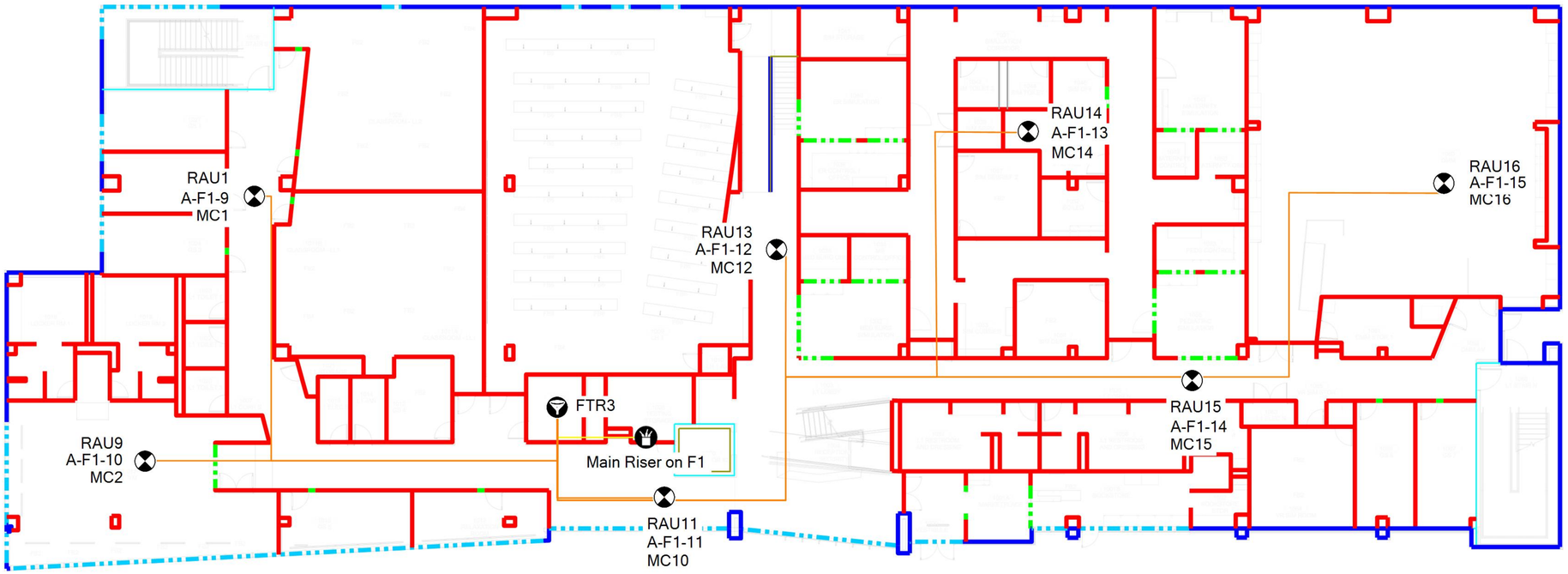

24,500 SF

50.00 ft

N

	Title: F1 Cherokee Nation Com	Designer:
	Company:	Date: 8/23/2019

Materials legend

- Black Railing NEW
- Concrete [Heavy] (Brown graveled)
- Concrete [Heavy] Gray
- Concrete [Heavy]
- Drywall (Textured)
- Elevator Bank Metal LL
- Glass Window
- Window Indoor LL

- Concrete [Heavy]
- Elevator Bank Metal LL
- Plaster Board / Sheetrock [Heavy]

Cables legend

- 024E81-33131-A1
- Dummy Jumper -Connect RIM - HEU, RAU - RXU
- HR1818H4C06U8A3020F-PN
- HR1818H4C06U8A3110F-PN
- HR1818H4C06U8A3140F-PN
- HR1818H4C06U8A3150F-PN
- HR1818H4C06U8A3220F-PN
- HR1818H4C06U8A3250F-PN
- PTS1P-QMHM-1M-P

Pictograms legend

- Antenna
- Filter
- Media Converter
- Riser

Indoor prediction legend

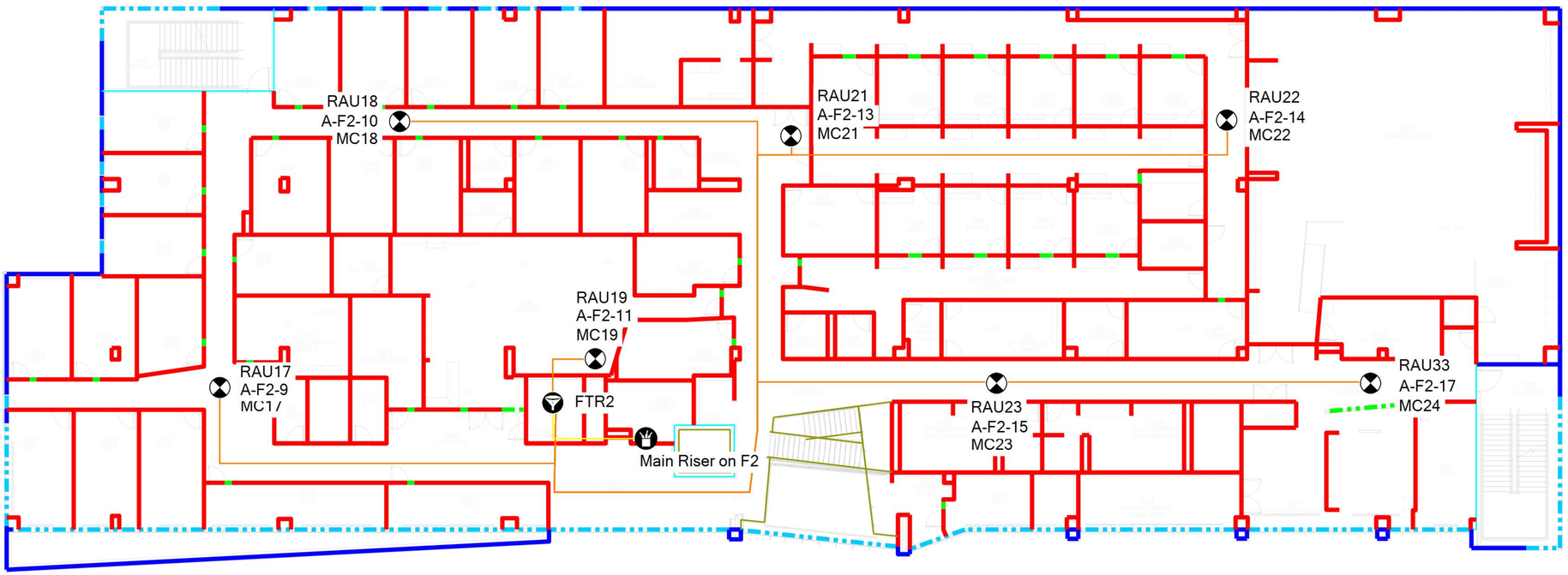

23,500 SF

50.00 ft

N

	Title: F2 Cherokee Nation Com	Designer:
	Company:	Date: 8/23/2019

Materials legend

- Black Railing NEW
- Concrete [Heavy] (Brown graveled)
- Concrete [Heavy] Gray
- Concrete [Heavy]
- Drywall (Textured)
- Elevator Bank Metal LL
- Glass Window
- Window Indoor LL

- Concrete [Heavy] Gray
- Concrete [Heavy]
- Elevator Bank Metal LL
- Plaster Board / Sheetrock [Heavy]

Cables legend

- 024E81-33131-A1
- Dummy Jumper -Connect RIM - HEU, RAU - RXU
- HR1818H4C06U8A3050F-PN
- HR1818H4C06U8A3070F-PN
- HR1818H4C06U8A3100F-PN
- HR1818H4C06U8A3130F-PN
- HR1818H4C06U8A3190F-PN
- HR1818H4C06U8A3200F-PN
- HR1818H4C06U8A3270F-PN
- PTS1P-QMHM-1M-P

Pictograms legend

- Antenna
- Filter
- Media Converter
- Riser

Indoor prediction legend

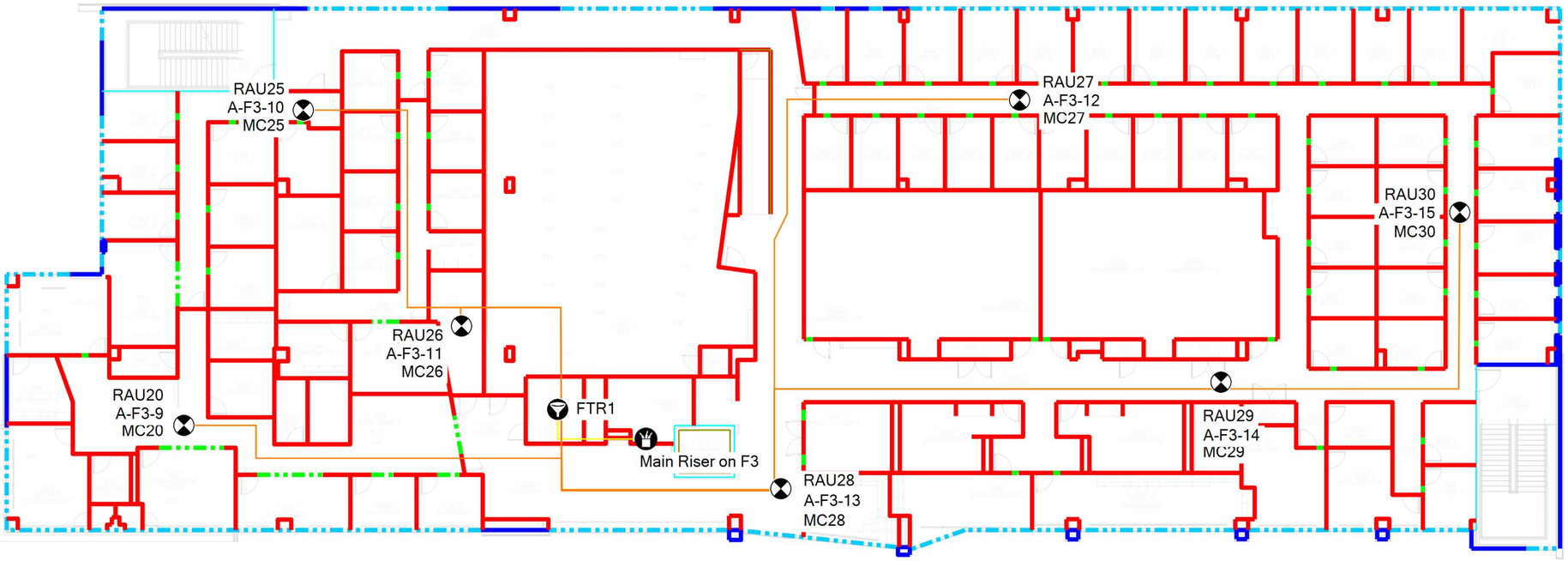

24,000 SF

50.00 ft

N

	Title: F3 Cherokee Nation Com	Designer:
	Company:	Date: 8/23/2019

SECTION 28 3111

DIGITAL, ADDRESSABLE FIRE-ALARM SYSTEM

PART 1 - GENERAL

1.1 RELATED DOCUMENTS

A. Drawings and general provisions of the Contract, including General and Supplementary Conditions and Division 01 Specification Sections, apply to this Section.

1.2 SUMMARY

A. Section Includes:

1. Fire-alarm control unit.
2. Manual fire-alarm boxes.
3. System smoke detectors.
4. Non-system smoke detectors.
5. Heat detectors.
6. Notification appliances.
7. Remote annunciator.
8. Addressable interface device.
9. Network communications.

B. Related Requirements:

1. Section 28 0513 "Conductors and Cables for Electronic Safety and Security" for cables and conductors for fire-alarm systems.

1.3 DEFINITIONS

A. EMT: Electrical Metallic Tubing.

B. FACP: Fire Alarm Control Panel.

C. HLI: High Level Interface.

D. NICET: National Institute for Certification in Engineering Technologies.

E. PC: Personal computer.

F. VESDA: Very Early Smoke-Detection Apparatus.

1.4 ACTION SUBMITTALS

A. Product Data: For each type of product, including furnished options and accessories.

1. Include construction details, material descriptions, dimensions, profiles, and finishes.

2. Include rated capacities, operating characteristics, and electrical characteristics.

B. Shop Drawings: For fire-alarm system.

1. Comply with recommendations and requirements in the "Documentation" section of the "Fundamentals" chapter in NFPA 72.
2. Include plans, elevations, sections, details, and attachments to other work.
3. Include details of equipment assemblies. Indicate dimensions, weights, loads, required clearances, method of field assembly, components, and locations. Indicate conductor sizes, indicate termination locations and requirements, and distinguish between factory and field wiring.
4. Detail assembly and support requirements.
5. Include voltage drop calculations for notification-appliance circuits.
6. Include battery-size calculations.
7. Include input/output matrix.
8. Include statement from manufacturer that all equipment and components have been tested as a system and meet all requirements in this Specification and in NFPA 72.
9. Include performance parameters and installation details for each detector.
10. Verify that each duct detector is listed for complete range of air velocity, temperature, and humidity possible when air-handling system is operating.
11. Provide program report showing that air-sampling detector pipe layout balances pneumatically within the airflow range of the air-sampling detector.
12. Include plans, sections, and elevations of heating, ventilating, and air-conditioning ducts, drawn to scale; coordinate location of duct smoke detectors and access to them.

    a. Show critical dimensions that relate to placement and support of sampling tubes, detector housing, and remote status and alarm indicators.
    b. Show field wiring required for HVAC unit shutdown on alarm.
    c. Show field wiring and equipment required for HVAC unit shutdown on alarm and override by firefighters' control system.
    d. Show field wiring and equipment required for HVAC unit shutdown on alarm and override by firefighters' smoke-evacuation system.
    e. Locate detectors according to manufacturer's written recommendations.
    f. Show air-sampling detector pipe routing.

13. Include voice/alarm signaling-service equipment rack or console layout, grounding schematic, amplifier power calculation, and single-line connection diagram.
14. Include floor plans to indicate final outlet locations showing address of each addressable device. Show size and route of cable and conduits and point-to-point wiring diagrams.

C. General Submittal Requirements:

1. Submittals shall be approved by authorities having jurisdiction prior to submitting them to Architect.
2. Shop Drawings shall be prepared by persons with the following qualifications:

    a. Trained and certified by manufacturer in fire-alarm system design.
    b. NICET-certified, fire-alarm technician; Level IV minimum.
    c. Licensed or certified by authorities having jurisdiction.

D. Delegated-Design Submittal: For notification appliances and smoke and heat detectors, in addition to submittals listed above, indicate compliance with performance requirements and design criteria, including analysis data signed and sealed by the qualified professional engineer responsible for their preparation.

1. Drawings showing the location of each notification appliance and smoke and heat detector, ratings of each, and installation details as needed to comply with listing conditions of the device.
2. Design Calculations: Calculate requirements for selecting the spacing and sensitivity of detection, complying with NFPA 72. Calculate spacing and intensities for strobe signals and sound-pressure levels for audible appliances.
3. Indicate audible appliances required to produce square wave signal per NFPA 72.

1.5 INFORMATIONAL SUBMITTALS

A. Qualification Data: For Installer.

B. Seismic Qualification Certificates: For fire-alarm control unit, accessories, and components, from manufacturer.

1. Basis for Certification: Indicate whether withstand certification is based on actual test of assembled components or on calculation.
2. Dimensioned Outline Drawings of Equipment Unit: Identify center of gravity and locate and describe mounting and anchorage provisions.
3. Detailed description of equipment anchorage devices on which the certification is based and their installation requirements.

C. Field quality-control reports.

1.6 Sample Warranty: For special warranty.

1.7 CLOSEOUT SUBMITTALS

A. Operation and Maintenance Data: For fire-alarm systems and components to include in emergency, operation, and maintenance manuals.

1. In addition to items specified in Section 01 7823 "Operation and Maintenance Data," include the following:

a. Comply with the "Records" section of the "Inspection, Testing and Maintenance" chapter in NFPA 72.
b. Provide "Fire Alarm and Emergency Communications System Record of Completion Documents" according to the "Completion Documents" Article in the "Documentation" section of the "Fundamentals" chapter in NFPA 72.
c. Complete wiring diagrams showing connections between all devices and equipment. Each conductor shall be numbered at every junction point with indication of origination and termination points.
d. Riser diagram.
e. Device addresses.
f. Air-sampling system sample port locations and modeling program report showing layout meets performance criteria.
g. Record copy of site-specific software.
h. Provide "Inspection and Testing Form" according to the "Inspection, Testing and Maintenance" chapter in NFPA 72, and include the following:

1) Equipment tested.
2) Frequency of testing of installed components.

3) Frequency of inspection of installed components.
4) Requirements and recommendations related to results of maintenance.
5) Manufacturer's user training manuals.

i. Manufacturer's required maintenance related to system warranty requirements.
j. Abbreviated operating instructions for mounting at fire-alarm control unit and each annunciator unit.

B. Software and Firmware Operational Documentation:

1. Software operating and upgrade manuals.
2. Program Software Backup: On magnetic media or compact disk, complete with data files.
3. Device address list.
4. Printout of software application and graphic screens.

1.8 MAINTENANCE MATERIAL SUBMITTALS

A. Furnish extra materials that match products installed and that are packaged with protective covering for storage and identified with labels describing contents.

1. Lamps for Remote Indicating Lamp Units: Quantity equal to 10 percent of amount installed, but no fewer than one unit.
2. Lamps for Strobe Units: Quantity equal to 10 percent of amount installed, but no fewer than one unit.
3. Smoke Detectors, Fire Detectors: Quantity equal to 10 percent of amount of each type installed, but no fewer than one unit of each type.
4. Detector Bases: Quantity equal to two percent of amount of each type installed, but no fewer than one unit of each type.
5. Keys and Tools: One extra set for access to locked or tamperproofed components.
6. Audible and Visual Notification Appliances: One of each type installed.
7. Fuses: Two of each type installed in the system. Provide in a box or cabinet with compartments marked with fuse types and sizes.
8. Filters for Air-Sampling Detectors: Quantity equal to two percent of amount of each type installed, but no fewer than one unit of each type.
9. Air-Sampling Fan: Quantity equal to one for every five detectors, but no fewer than one unit of each type.

1.9 QUALITY ASSURANCE

A. Installer Qualifications: Personnel shall be trained and certified by manufacturer for installation of units required for this Project.

B. Installer Qualifications: Installation shall be by personnel certified by NICET as fire-alarm Level IV technician.

C. NFPA Certification: Obtain certification according to NFPA 72 by an NRTL (nationally recognized testing laboratory).

D. NFPA Certification: Obtain certification according to NFPA 72 by a UL-listed alarm company.

E. NFPA Certification: Obtain certification according to NFPA 72 in the form of a placard by an FM Global-approved alarm company.

F. NFPA Certification: Obtain certification according to NFPA 72 by.

1.10 PROJECT CONDITIONS

A. Perform a full test of the existing system prior to starting work. Document any equipment or components not functioning as designed.

B. Interruption of Existing Fire-Alarm Service: Do not interrupt fire-alarm service to facilities occupied by Owner or others unless permitted under the following conditions and then only after arranging to provide temporary guard service according to requirements indicated:

1. Notify Construction Manager no fewer than seven days in advance of proposed interruption of fire-alarm service.
2. Do not proceed with interruption of fire-alarm service without Construction Manager's written permission.

C. Use of Devices during Construction: Protect devices during construction unless devices are placed in service to protect the facility during construction.

1.11 SEQUENCING AND SCHEDULING

A. Existing Fire-Alarm Equipment: Maintain existing equipment fully operational until new equipment has been tested and accepted. As new equipment is installed, label it "NOT IN SERVICE" until it is accepted. Remove labels from new equipment when put into service, and label existing fire-alarm equipment "NOT IN SERVICE" until removed from the building.

B. Equipment Removal: After acceptance of new fire-alarm system, remove existing disconnected fire-alarm equipment and wiring.

1.12 WARRANTY

A. Special Warranty: Manufacturer agrees to repair or replace fire-alarm system equipment and components that fail in materials or workmanship within specified warranty period.

1. Warranty Extent: All equipment and components not covered in the Maintenance Service Agreement.
2. Warranty Period: Five years from date of Substantial Completion.

PART 2 - PRODUCTS

2.1 SYSTEM DESCRIPTION

A. Source Limitations for Fire-Alarm System and Components: Components shall be compatible with, and operate as an extension of, existing system. Provide system manufacturer's certification that all components provided have been tested as, and will operate as, a system.

B. Noncoded, UL-certified addressable system, with multiplexed signal transmission and horn/strobe evacuation.

C. Automatic sensitivity control of certain smoke detectors.

D. All components provided shall be listed for use with the selected system.

E. Electrical Components, Devices, and Accessories: Listed and labeled as defined in NFPA 70, by a qualified testing agency, and marked for intended location and application.

2.2 SYSTEMS OPERATIONAL DESCRIPTION

A. Fire-alarm signal initiation shall be by one or more of the following devices:

1. Manual stations.
2. Heat detectors.
3. Flame detectors.
4. Smoke detectors.
5. Duct smoke detectors.
6. Air-sampling smoke-detection system (VESDA).
7. Carbon monoxide detectors.
8. Combustible gas detectors.
9. Automatic sprinkler system water flow.
10. Preaction system.
11. Fire-extinguishing system operation.
12. Fire standpipe system.
13. Dry system pressure flow switch.
14. Fire pump running.

B. Fire-alarm signal shall initiate the following actions:

1. Continuously operate alarm notification appliances.
2. Identify alarm and specific initiating device at fire-alarm control unit.
3. Transmit an alarm signal to the remote alarm receiving station.
4. Unlock electric door locks in designated egress paths.
5. Release fire and smoke doors held open by magnetic door holders.
6. Activate voice/alarm communication system.
7. Switch heating, ventilating, and air-conditioning equipment controls to fire-alarm mode.
8. Activate smoke-control system (smoke management) at firefighters' smoke-control system panel.
9. Activate stairwell and elevator-shaft pressurization systems.
10. Close smoke dampers in air ducts of designated air-conditioning duct systems.
11. Activate preaction system.
12. Recall elevators to primary or alternate recall floors.
13. Activate elevator power shunt trip.
14. Activate emergency lighting control.
15. Activate emergency shutoffs for gas and fuel supplies.
16. Record events in the system memory.
17. Record events by the system printer.
18. Indicate device in alarm on the graphic annunciator.

C. Supervisory signal initiation shall be by one or more of the following devices and actions:

1. Valve supervisory switch.
2. High- or low-air-pressure switch of a dry-pipe or preaction sprinkler system.
3. Alert and Action signals of air-sampling detector system.
4. Elevator shunt-trip supervision.
5. Fire pump running.
6. Fire-pump loss of power.

7. Fire-pump power phase reversal.
8. Independent fire-detection and -suppression systems.
9. User disabling of zones or individual devices.
10. Loss of communication with any panel on the network.

D. System trouble signal initiation shall be by one or more of the following devices and actions:

1. Open circuits, shorts, and grounds in designated circuits.
2. Opening, tampering with, or removing alarm-initiating and supervisory signal-initiating devices.
3. Loss of communication with any addressable sensor, input module, relay, control module, remote annunciator, printer interface, or Ethernet module.
4. Loss of primary power at fire-alarm control unit.
5. Ground or a single break in internal circuits of fire-alarm control unit.
6. Abnormal ac voltage at fire-alarm control unit.
7. Break in standby battery circuitry.
8. Failure of battery charging.
9. Abnormal position of any switch at fire-alarm control unit or annunciator.
10. Voice signal amplifier failure.
11. Hose cabinet door open.

E. System Supervisory Signal Actions:

1. Initiate notification appliances.
2. Identify specific device initiating the event at fire-alarm control unit.
3. Record the event on system printer.
4. After a time delay of 200 seconds, transmit a trouble or supervisory signal to the remote alarm receiving station.
5. Transmit system status to building management system.
6. Display system status on graphic annunciator.

2.3 FIRE-ALARM CONTROL UNIT

A. Manufacturers:
1. FCI
2. SimplexGrinnell LP.
3. Notifier
4. (Owner Selection)

B. General Requirements for Fire-Alarm Control Unit:

1. Field-programmable, microprocessor-based, modular, power-limited design with electronic modules, complying with UL 864.

a. System software and programs shall be held in nonvolatile flash, electrically erasable, programmable, read-only memory, retaining the information through failure of primary and secondary power supplies.
b. Include a real-time clock for time annotation of events on the event recorder and printer.
c. Provide communication between the FACP and remote circuit interface panels, annunciators, and displays.
d. The FACP shall be listed for connection to a central-station signaling system service.

e. Provide nonvolatile memory for system database, logic, and operating system and event history. The system shall require no manual input to initialize in the event of a complete power down condition. The FACP shall provide a minimum 500-event history log.

2. Addressable Initiation Device Circuits: The FACP shall indicate which communication zones have been silenced and shall provide selective silencing of alarm notification appliance by building communication zone.
3. Addressable Control Circuits for Operation of Notification Appliances and Mechanical Equipment: The FACP shall be listed for releasing service.

C. Alphanumeric Display and System Controls: Arranged for interface between human operator at fire-alarm control unit and addressable system components including annunciation and supervision. Display alarm, supervisory, and component status messages and the programming and control menu.

1. Annunciator and Display: Liquid-crystal type, 80 characters, minimum.
2. Keypad: Arranged to permit entry and execution of programming, display, and control commands.

D. Alphanumeric Display and System Controls: Arranged for interface between human operator at fire-alarm control unit and addressable system components including annunciation and supervision. Display alarm, supervisory, and component status messages and the programming and control menu.

1. Annunciator and Display: Liquid-crystal type, two or three] line(s) of 40 or 80 characters, minimum.
2. Keypad: Arranged to permit entry and execution of programming, display, and control commands.

E. Initiating-Device, Notification-Appliance, and Signaling-Line Circuits:

1. Pathway Class Designations: NFPA 72, Class A or Class B as required.
2. Pathway Survivability: Level 0 or Level 1 as required.
3. Install no more than 256 addressable devices on each signaling-line circuit.
4. Serial Interfaces:

a. One dedicated RS 485 port for central-station or remote station operation using point ID DACT.
b. One RS 485 port for remote annunciators, Ethernet module, or multi-interface module (printer port).
c. One USB port for PC configuration.
d. One RS 232 port for VESDA HLI connection.
e. One RS 232 port for voice evacuation interface.

F. Smoke-Alarm Verification:

1. Initiate audible and visible indication of an "alarm-verification" signal at fire-alarm control unit.
2. Activate an approved "alarm-verification" sequence at fire-alarm control unit and detector.
3. Record events by the system printer.
4. Sound general alarm if the alarm is verified.
5. Cancel fire-alarm control unit indication and system reset if the alarm is not verified.

G. Notification-Appliance Circuit:

1. Audible appliances shall sound in a three-pulse temporal pattern, as defined in NFPA 72.
2. Where notification appliances provide signals to sleeping areas, the alarm signal shall be a 520-Hz square wave with an intensity 15 dB above the average ambient sound level or 5 dB above the maximum sound level, or at least 75 dBA, whichever is greater, measured at the pillow.
3. Visual alarm appliances shall flash in synchronization where multiple appliances are in the same field of view, as defined in NFPA 72.

H. Elevator Recall:

1. Elevator recall shall be initiated only by one of the following alarm-initiating devices:

    a. Elevator lobby detectors except the lobby detector on the designated floor.
    b. Smoke detector in elevator machine room.
    c. Smoke detectors in elevator hoistway.

2. Elevator controller shall be programmed to move the cars to the alternate recall floor if lobby detectors located on the designated recall floors are activated.
3. Water-flow alarm connected to sprinkler in an elevator shaft and elevator machine room shall shut down elevators associated with the location without time delay.

    a. Water-flow switch associated with the sprinkler in the elevator pit may have a delay to allow elevators to move to the designated floor.

I. Door Controls: Door hold-open devices that are controlled by smoke detectors at doors in smoke-barrier walls shall [be] [not be] connected to fire-alarm system.

J. Remote Smoke-Detector Sensitivity Adjustment: Controls shall select specific addressable smoke detectors for adjustment, display their current status and sensitivity settings, and change those settings. Allow controls to be used to program repetitive, time-scheduled, and automated changes in sensitivity of specific detector groups. Record sensitivity adjustments and sensitivity-adjustment schedule changes in system memory, and print out the final adjusted values on system printer.

K. Transmission to Remote Alarm Receiving Station: Automatically transmit alarm, supervisory, and trouble signals to a remote alarm station.

L. Voice/Alarm Signaling Service: Central emergency communication system with redundant microphones, preamplifiers, amplifiers, and tone generators provided.

1. Indicate number of alarm channels for automatic, simultaneous transmission of different announcements to different zones or for manual transmission of announcements by use of the central-control microphone. Amplifiers shall comply with UL 1711.

    a. Allow the application of, and evacuation signal to, indicated number of zones and, at the same time, allow voice paging to the other zones selectively or in any combination.
    b. Programmable tone and message sequence selection.
    c. Standard digitally recorded messages for "Evacuation" and "All Clear."
    d. Generate tones to be sequenced with audio messages of type recommended by NFPA 72 and that are compatible with tone patterns of notification-appliance circuits of fire-alarm control unit.

2. Status Annunciator: Indicate the status of various voice/alarm speaker zones and the status of firefighters' two-way telephone communication zones.

3. Preamplifiers, amplifiers, and tone generators shall automatically transfer to backup units, on primary equipment failure.

M. Printout of Events: On receipt of signal, print alarm, supervisory, and trouble events. Identify zone, device, and function. Include type of signal (alarm, supervisory, or trouble) and date and time of occurrence. Differentiate alarm signals from all other printed indications. Also print system reset event, including same information for device, location, date, and time. Commands initiate the printing of a list of existing alarm, supervisory, and trouble conditions in the system and a historical log of events.

N. Primary Power: 24-V dc obtained from 120-V ac service and a power-supply module. Initiating devices, notification appliances, signaling lines, trouble signals, shall be powered by 24-V dc source.

1. Alarm current draw of entire fire-alarm system shall not exceed 80 percent of the power-supply module rating.

O. Secondary Power: 24-V dc supply system with batteries, automatic battery charger, and automatic transfer switch.

1. Batteries: Sealed lead calcium.

P. Instructions: Computer printout or typewritten instruction card mounted behind a plastic or glass cover in a stainless-steel or aluminum frame. Include interpretation and describe appropriate response for displays and signals. Briefly describe the functional operation of the system under normal, alarm, and trouble conditions.

2.4 MANUAL FIRE-ALARM BOXES

A. Manufacturers:
1. SimplexGrinnell LP.
2. Notifier
3. Bosch Security Systems
4. (Owner Selection)

B. General Requirements for Manual Fire-Alarm Boxes: Comply with UL 38. Boxes shall be finished in red with molded, raised-letter operating instructions in contrasting color; shall show visible indication of operation; and shall be mounted on recessed outlet box. If indicated as surface mounted, provide manufacturer's surface back box.
1. Double-action mechanism requiring two actions to initiate an alarm, pull-lever type; with integral or attached addressable module arranged to communicate manual-station status (normal, alarm, or trouble) to fire-alarm control unit.
2. Station Reset: Key- or wrench-operated switch.
3. Indoor Protective Shield: Factory-fabricated, clear plastic enclosure hinged at the top to permit lifting for access to initiate an alarm. Lifting the cover actuates an integral battery-powered audible horn intended to discourage false-alarm operation.
4. Weatherproof Protective Shield: Factory-fabricated, clear plastic enclosure hinged at the top to permit lifting for access to initiate an alarm.

2.5 SYSTEM SMOKE DETECTORS

A. Manufacturers:
1. SimplexGrinnell LP.

2. System Sensor
3. Bosch Security Systems
4. (Owner Selection)

B. General Requirements for System Smoke Detectors:

1. Comply with UL 268; operating at 24-V dc, nominal.
2. Detectors shall be four or two wire type.
3. Integral Addressable Module: Arranged to communicate detector status (normal, alarm, or trouble) to fire-alarm control unit.
4. Base Mounting: Detector and associated electronic components shall be mounted in a twist-lock module that connects to a fixed base. Provide terminals in the fixed base for connection to building wiring.
5. Self-Restoring: Detectors do not require resetting or readjustment after actuation to restore them to normal operation.
6. Integral Visual-Indicating Light: LED type, indicating detector has operated.
7. Remote Control: Unless otherwise indicated, detectors shall be digital-addressable type, individually monitored at fire-alarm control unit for calibration, sensitivity, and alarm condition.

    a. Rate-of-rise temperature characteristic of combination smoke- and heat-detection units shall be selectable at fire-alarm control unit for 15 or 20 deg per minute.
    b. Fixed-temperature sensing characteristic of combination smoke- and heat-detection units shall be independent of rate-of-rise sensing and shall be settable at fire-alarm control unit to operate at 135 or 155 deg F
    c. Multiple levels of detection sensitivity for each sensor.
    d. Sensitivity levels based on time of day.

C. Photoelectric Smoke Detectors:

1. Detector address shall be accessible from fire-alarm control unit and shall be able to identify the detector's location within the system and its sensitivity setting.
2. An operator at fire-alarm control unit, having the designated access level, shall be able to manually access the following for each detector:

    a. Primary status.
    b. Device type.
    c. Present average value.
    d. Present sensitivity selected.
    e. Sensor range (normal, dirty, etc.).

D. Duct Smoke Detectors: Photoelectric type complying with UL 268A.

1. Detector address shall be accessible from fire-alarm control unit and shall be able to identify the detector's location within the system and its sensitivity setting.
2. An operator at fire-alarm control unit, having the designated access level, shall be able to manually access the following for each detector:

    a. Primary status.
    b. Device type.
    c. Present average value.
    d. Present sensitivity selected.
    e. Sensor range (normal, dirty, etc.).

3. Weatherproof Duct Housing Enclosure: NEMA 250, Type 4X; NRTL listed for use with the supplied detector for smoke detection in HVAC system ducts.
4. Each sensor shall have multiple levels of detection sensitivity.
5. Sampling Tubes: Design and dimensions as recommended by manufacturer for specific duct size, air velocity, and installation conditions where applied.
6. Relay Fan Shutdown: Fully programmable relay rated to interrupt fan motor-control circuit.

2.6 HEAT DETECTORS

A. Manufacturers:
1. SimplexGrinnell LP.
2. System Sensor
3. Bosch Security Systems
4. (Owner Selection)

B. General Requirements for Heat Detectors: Comply with UL 521.

1. Temperature sensors shall test for and communicate the sensitivity range of the device.

C. Heat Detector, Combination Type: Actuated by either a fixed temperature of 135 deg F or a rate of rise that exceeds 15 deg F per minute unless otherwise indicated.

1. Mounting: [Adapter plate for outlet box mounting] [Twist-lock base interchangeable with smoke-detector bases].
2. Integral Addressable Module: Arranged to communicate detector status (normal, alarm, or trouble) to fire-alarm control unit.

D. Heat Detector, Fixed-Temperature Type: Actuated by temperature that exceeds a fixed temperature of 190 deg F.

1. Mounting: [Adapter plate for outlet box mounting] [Twist-lock base interchangeable with smoke-detector bases].
2. Integral Addressable Module: Arranged to communicate detector status (normal, alarm, or trouble) to fire-alarm control unit.

E. Continuous Linear Heat-Detector System:

1. Detector Cable: Rated detection temperature 155 deg F. Listed for "regular" service and a standard environment. Cable includes two steel actuator wires twisted together with spring pressure, wrapped with protective tape, and finished with PVC outer sheath. Each actuator wire is insulated with heat-sensitive material that reacts with heat to allow the cable twist pressure to short circuit wires at the location of elevated temperature.
2. Control Unit: Two-zone or multizone unit as indicated. Provide same system power supply, supervision, and alarm features as specified for fire-alarm control unit.
3. Signals to Fire-Alarm Control Unit: Any type of local system trouble shall be reported to fire-alarm control unit as a composite "trouble" signal. Alarms on each detection zone shall be individually reported to central fire-alarm control unit as separately identified zones.
4. Integral Addressable Module: Arranged to communicate detector status (normal, alarm, or trouble) to fire-alarm control unit.

2.7 NOTIFICATION APPLIANCES

A. Manufacturers:
   1. SimplexGrinnell LP.
   2. Gentex Corp.
   3. Siemens Industry, Inc.
   4. (Owner Selection)

B. General Requirements for Notification Appliances: Individually addressed, connected to a signaling-line circuit, equipped for mounting as indicated, and with screw terminals for system connections.

C. General Requirements for Notification Appliances: Connected to notification-appliance signal circuits, zoned as indicated, equipped for mounting as indicated, and with screw terminals for system connections.

   1. Combination Devices: Factory-integrated audible and visible devices in a single-mounting assembly, equipped for mounting as indicated, and with screw terminals for system connections.

D. Chimes, Low-Level Output: Vibrating type, 75-dBA minimum rated output.

E. Chimes, High-Level Output: Vibrating type, 81-dBA minimum rated output.

F. Horns: Electric-vibrating-polarized type, 24-V dc; with provision for housing the operating mechanism behind a grille. Comply with UL 464. Horns shall produce a sound-pressure level of 90 dBA, measured 10 feet from the horn, using the coded signal prescribed in UL 464 test protocol.

G. Visible Notification Appliances: Xenon strobe lights complying with UL 1971, with clear or nominal white polycarbonate lens mounted on an aluminum faceplate. The word "FIRE" is engraved in minimum 1-inch- high letters on the lens.

   1. Rated Light Output:
      a. 15/30/75/110 cd, selectable in the field.

   2. Mounting: Wall mounted unless otherwise indicated.
   3. For units with guards to prevent physical damage, light output ratings shall be determined with guards in place.
   4. Flashing shall be in a temporal pattern, synchronized with other units.
   5. Strobe Leads: Factory connected to screw terminals.
   6. Mounting Faceplate: Factory finished, color as specified by Architect/Owner.

H. Voice/Tone Notification Appliances:

   1. Comply with UL 1480.
   2. Speakers for Voice Notification: Locate speakers for voice notification to provide the intelligibility requirements of the "Notification Appliances" and "Emergency Communications Systems" chapters in NFPA 72.
   3. High-Range Units: Rated 2 to 15 W.
   4. Low-Range Units: Rated 1 to 2 W.
   5. Mounting: Flush.
   6. Matching Transformers: Tap range matched to acoustical environment of speaker location.

2.8 REMOTE ANNUNCIATOR

A. Description: Annunciator functions shall match those of fire-alarm control unit for alarm, supervisory, and trouble indications. Manual switching functions shall match those of fire-alarm control unit, including acknowledging, silencing, resetting, and testing.

1. Mounting: Flush cabinet, NEMA 250, Type 1.

B. Display Type and Functional Performance: Alphanumeric display and LED indicating lights shall match those of fire-alarm control unit. Provide controls to acknowledge, silence, reset, and test functions for alarm, supervisory, and trouble signals.

2.9 ADDRESSABLE INTERFACE DEVICE

A. General:

1. Include address-setting means on the module.
2. Store an internal identifying code for control panel use to identify the module type.
3. Listed for controlling HVAC fan motor controllers.

B. Monitor Module: Microelectronic module providing a system address for alarm-initiating devices for wired applications with normally open contacts.

C. Integral Relay: Capable of providing a direct signal.

1. Allow the control panel to switch the relay contacts on command.
2. Have a minimum of two normally open and two normally closed contacts available for field wiring.

D. Control Module:

1. Operate notification devices.
2. Operate solenoids for use in sprinkler service.

2.10 NETWORK COMMUNICATIONS

A. Provide network communications for fire-alarm system according to fire-alarm manufacturer's written requirements.

B. Provide network communications pathway per manufacturer's written requirements and requirements in NFPA 72 and NFPA 70.

PART 3 - EXECUTION

3.1 EXAMINATION

A. Examine areas and conditions for compliance with requirements for ventilation, temperature, humidity, and other conditions affecting performance of the Work.

1. Verify that manufacturer's written instructions for environmental conditions have been permanently established in spaces where equipment and wiring are installed, before installation begins.

B. Examine roughing-in for electrical connections to verify actual locations of connections before installation.

C. Proceed with installation only after unsatisfactory conditions have been corrected.

3.2 EQUIPMENT INSTALLATION

A. Comply with NFPA 72, NFPA 101, and requirements of authorities having jurisdiction for installation and testing of fire-alarm equipment. Install all electrical wiring to comply with requirements in NFPA 70 including, but not limited to, Article 760, "Fire Alarm Systems."

1. Devices placed in service before all other trades have completed cleanup shall be replaced.
2. Devices installed but not yet placed in service shall be protected from construction dust, debris, dirt, moisture, and damage according to manufacturer's written storage instructions.

B. Equipment Mounting: Install fire-alarm control unit on finished floor.

1. Comply with requirements for seismic-restraint devices specified in Section 26 0548.16 "Seismic Controls for Electrical Systems."

C. Install wall-mounted equipment, with tops of cabinets not more than 78 inches above the finished floor.

1. Comply with requirements for seismic-restraint devices specified in Section 26 0548.16 "Seismic Controls for Electrical Systems."

D. Manual Fire-Alarm Boxes:

1. Install manual fire-alarm box in the normal path of egress within 60 inches of the exit doorway.
2. Mount manual fire-alarm box on a background of a contrasting color.
3. The operable part of manual fire-alarm box shall be between 42 inches and 48 inches above floor level. All devices shall be mounted at the same height unless otherwise indicated.

E. Smoke- or Heat-Detector Spacing:

1. Comply with the "Smoke-Sensing Fire Detectors" section in the "Initiating Devices" chapter in NFPA 72, for smoke-detector spacing.
2. Comply with the "Heat-Sensing Fire Detectors" section in the "Initiating Devices" chapter in NFPA 72, for heat-detector spacing.
3. Smooth ceiling spacing shall not exceed 30 feet.
4. Spacing of detectors for irregular areas, for irregular ceiling construction, and for high ceiling areas shall be determined according to Annex A in NFPA 72.
5. HVAC: Locate detectors not closer than 36 inches from air-supply diffuser or return-air opening.
6. Lighting Fixtures: Locate detectors not closer than 12 inches from any part of a lighting fixture and not directly above pendant mounted or indirect lighting.

F. Install a cover on each smoke detector that is not placed in service during construction. Cover shall remain in place except during system testing. Remove cover prior to system turnover.

G. Duct Smoke Detectors: Comply with NFPA 72 and NFPA 90A. Install sampling tubes so they extend the full width of duct. Tubes more than 36 inches long shall be supported at both ends.

1. Do not install smoke detector in duct smoke-detector housing during construction. Install detector only during system testing and prior to system turnover.

H. Single-Station Smoke Detectors: Where more than one smoke alarm is installed within a dwelling or suite, they shall be connected so that the operation of any smoke alarm causes the alarm in all smoke alarms to sound.

I. Remote Status and Alarm Indicators: Install in a visible location near each smoke detector, sprinkler water-flow switch, and valve-tamper switch that is not readily visible from normal viewing position.

J. Audible Alarm-Indicating Devices: Install not less than 6 inches below the ceiling. Install bells and horns on flush-mounted back boxes with the device-operating mechanism concealed behind a grille. Install all devices at the same height unless otherwise indicated.

K. Visible Alarm-Indicating Devices: Install adjacent to each alarm bell or alarm horn and at least 6 inches below the ceiling. Install all devices at the same height unless otherwise indicated.

L. Device Location-Indicating Lights: Locate in public space near the device they monitor.

M. Antenna for Radio Alarm Transmitter: Mount to building structure where indicated. Use mounting arrangement and substrate connection that resists 100-mph wind load with a gust factor of 1.3 without damage.

3.3 PATHWAYS

A. Pathways above recessed ceilings and in no accessible locations may be routed exposed.

1. Exposed pathways located less than 96 inches above the floor shall be installed in EMT.

B. Pathways shall be installed in EMT.

C. Exposed EMT shall be painted red enamel.

3.4 CONNECTIONS

A. For fire-protection systems related to doors in fire-rated walls and partitions and to doors in smoke partitions, comply with requirements in Section 08 7100 "Door Hardware." Connect hardware and devices to fire-alarm system.

1. Verify that hardware and devices are listed for use with installed fire-alarm system before making connections.

B. Make addressable connections with a supervised interface device to the following devices and systems. Install the interface device less than 36 inches from the device controlled. Make an addressable confirmation connection when such feedback is available at the device or system being controlled.

1. Alarm-initiating connection to smoke-control system (smoke management) at firefighters' smoke-control system panel.
2. Alarm-initiating connection to stairwell and elevator-shaft pressurization systems.
3. Smoke dampers in air ducts of designated HVAC duct systems.
4. Magnetically held-open doors.
5. Electronically locked doors and access gates.
6. Alarm-initiating connection to elevator recall system and components.
7. Alarm-initiating connection to activate emergency lighting control.
8. Alarm-initiating connection to activate emergency shutoffs for gas and fuel supplies.
9. Supervisory connections at valve supervisory switches.
10. Supervisory connections at low-air-pressure switch of each dry-pipe sprinkler system.
11. Supervisory connections at elevator shunt-trip breaker.
12. Data communication circuits for connection to building management system.
13. Data communication circuits for connection to mass notification system.
14. Supervisory connections at fire-extinguisher locations.
15. Supervisory connections at fire-pump power failure including a dead-phase or phase-reversal condition.
16. Supervisory connections at fire-pump engine control panel.

3.5 IDENTIFICATION

A. Identify system components, wiring, cabling, and terminals. Comply with requirements for identification specified in Section 26 0553 "Identification for Electrical Systems."

B. Install framed instructions in a location visible from fire-alarm control unit.

3.6 GROUNDING

A. Ground fire-alarm control unit and associated circuits; comply with IEEE 1100. Install a ground wire from main service ground to fire-alarm control unit.

B. Ground shielded cables at the control panel location only. Insulate shield at device location.

3.7 FIELD QUALITY CONTROL

A. Field tests shall be witnessed by authorities having jurisdiction and engineer.

B. Manufacturer's Field Service: Engage a factory-authorized service representative to test and inspect components, assemblies, and equipment installations, including connections.

C. Perform tests and inspections.

D. Perform the following tests and inspections with the assistance of a factory-authorized service representative:

1. Visual Inspection: Conduct visual inspection prior to testing.

    a. Inspection shall be based on completed record Drawings and system documentation that is required by the "Completion Documents, Preparation" table in the "Documentation" section of the "Fundamentals" chapter in NFPA 72.

b. Comply with the "Visual Inspection Frequencies" table in the "Inspection" section of the "Inspection, Testing and Maintenance" chapter in NFPA 72; retain the "Initial/Reacceptance" column and list only the installed components.

2. System Testing: Comply with the "Test Methods" table in the "Testing" section of the "Inspection, Testing and Maintenance" chapter in NFPA 72.
3. Test audible appliances for the public operating mode according to manufacturer's written instructions. Perform the test using a portable sound-level meter complying with Type 2 requirements in ANSI S1.4.
4. Test audible appliances for the private operating mode according to manufacturer's written instructions.
5. Test visible appliances for the public operating mode according to manufacturer's written instructions.
6. Factory-authorized service representative shall prepare the "Fire Alarm System Record of Completion" in the "Documentation" section of the "Fundamentals" chapter in NFPA 72 and the "Inspection and Testing Form" in the "Records" section of the "Inspection, Testing and Maintenance" chapter in NFPA 72.

E. Reacceptance Testing: Perform reacceptance testing to verify the proper operation of added or replaced devices and appliances.

F. Fire-alarm system will be considered defective if it does not pass tests and inspections.

G. Prepare test and inspection reports.

H. Maintenance Test and Inspection: Perform tests and inspections listed for weekly, monthly, quarterly, and semiannual periods. Use forms developed for initial tests and inspections.

I. Annual Test and Inspection: One year after date of Substantial Completion, test fire-alarm system complying with visual and testing inspection requirements in NFPA 72. Use forms developed for initial tests and inspections.

3.8 MAINTENANCE SERVICE

A. Initial Maintenance Service: Beginning at Substantial Completion, maintenance service shall include 12 months' full maintenance by skilled employees of manufacturer's designated service organization. Include preventive maintenance, repair or replacement of worn or defective components, lubrication, cleaning, and adjusting as required for proper operation. Parts and supplies shall be manufacturer's authorized replacement parts and supplies.

1. Include visual inspections according to the "Visual Inspection Frequencies" table in the "Testing" paragraph of the "Inspection, Testing and Maintenance" chapter in NFPA 72.
2. Perform tests in the "Test Methods" table in the "Testing" paragraph of the "Inspection, Testing and Maintenance" chapter in NFPA 72.
3. Perform tests per the "Testing Frequencies" table in the "Testing" paragraph of the "Inspection, Testing and Maintenance" chapter in NFPA 72.

3.9 SOFTWARE SERVICE AGREEMENT

A. Comply with UL 864.

B. Technical Support: Beginning at Substantial Completion, service agreement shall include software support for two years.

C. Upgrade Service: At Substantial Completion, update software to latest version. Install and program software upgrades that become available within two years from date of Substantial Completion. Upgrading software shall include operating system and new or revised licenses for using software.

1. Upgrade Notice: At least 30 days to allow Owner to schedule access to system and to upgrade computer equipment if necessary.

3.10 DEMONSTRATION

A. Train Owner's maintenance personnel to adjust, operate, and maintain fire-alarm system.

END OF SECTION

SECTION 31 1000

SITE CLEARING

PART 1 - GENERAL

1.01 RELATED DOCUMENTS

A. Drawings and general provisions of the Contract, including General and Supplementary Conditions and Division 01 Specification Sections, apply to this Section.

1.02 SUMMARY

A. The work under this section of the Specifications includes all labor, materials, equipment, and services necessary for SITE CLEARING as shown on the Drawings and herein specified and in accordance with the Contract Documents. All costs for labor, materials, equipment, and services necessary for SITE CLEARING shall be included in the bid prices for the work.

1.01 SECTION INCLUDES

A. Clearing and Grubbing
B. Soil Stripping and Stockpiling

1.03 RELATED SECTIONS

A. 02 4113 Selective Site Demolition
B. 31 2300 Excavation and Fill
C. 31 2500 Erosion and Sedimentation Controls

1.04 DEFINITIONS

A. AHJ – Authority Having Jurisdiction

1. City of Tahlequah
2. United States Environmental Protection Agency (USEPA)
3. Oklahoma Department of Environmental Quality (ODEQ)

B. Subsoil: All soil beneath the topsoil layer of the soil profile, and typified by the lack of organic matter and soil organisms.

C. Surface Soil: Soil that is present at the top layer of the existing soil profile at the Project site. In undisturbed areas, the surface soil is typically topsoil; but in disturbed areas such as urban environments, the surface soil can be subsoil.

D. Topsoil: Top layer of the soil profile consisting of existing native surface topsoil or existing in-place surface soil and is the zone where plant roots grow.

E. Topsoil: Top layer of the soil profile consisting of existing native surface topsoil or existing in-place surface soil and is the zone where plant roots grow. Its appearance is generally friable, pervious, and black or a darker shade of brown, gray, or red than underlying subsoil; reasonably free of subsoil, clay lumps, gravel, and other objects more than 2 inches in diameter; and free of subsoil and weeds, roots, toxic materials, or other non-soil materials.

F. Plant-Protection Zone: Area surrounding individual trees, groups of trees, shrubs, or other vegetation to be protected during construction, and indicated on Drawings.

G. Tree-Protection Zone: Area surrounding individual trees or groups of trees to be protected during construction

H. Vegetation: Trees, shrubs, groundcovers, grass, and other plants.

1.05 MATERIAL OWNERSHIP

A. Except for stripped topsoil and other materials indicated to be stockpiled or otherwise remain Owner's property, cleared materials shall become Contractor's property and shall be removed from Project site.

1.06 INFORMATIONAL SUBMITTALS

A. Photograph, video, or both the existing trees and plantings, adjoining construction, roadways, utilities, and site improvements to establish preconstruction conditions. Identify preexisting damage to trees, plantings, adjoining construction, pavements, sidewalks, and other site improvements. Include plans and notations to identify and describe any such conditions.

1.07 PRECONSTRUCTION CONFERENCE

A. Conduct a preconstruction conference. Subcontractors that will be performing the work shall attend the preconstruction conference.

1.08 REGULATORY REQUIREMENTS

A. All materials and methods shall comply with the requirements of the AHJ.
B. If the AHJ has not adopted specifications for materials and methods, the Oklahoma Department of Transportation’s 2009 Specifications shall be used.

1.09 PERMITS

A. CONTRACTOR shall make application; pay permit fees; provide payment and performance bonds required of the CONTRACTOR by the AHJ.

1.10 TOPOGRAPHIC SURVEY

A. OWNER has or will perform a survey of the site, stake the property limits, and provide a reference benchmark elevation. CONTRACTOR shall be responsible for any additional offset staking or layout survey required to locate improvements and control grade of improvements. Be responsible for the proper location and level of the work and for the maintenance of reference lines and benchmarks. Any re-staking requested by the CONTRACTOR shall be done at his expense.

1.11 UNDERGROUND UTILITIES

A. CONTRACTOR shall contact OKIE (811 or 1-800-522-OKIE) prior to construction for locating existing utilities.
B. The underground utilities shown on the Drawings have been located from field survey surface information and existing drawings. ENGINEER and Surveyor make no guarantee that the underground utilities shown comprise all such utilities in the area, either in service or abandoned. The underground utilities are located as accurately as possible from information available; however, ENGINEER and Surveyor further do not guarantee that the underground utilities shown are in the exact location indicated either vertically or horizontally. ENGINEER and Surveyor have not physically located the underground utilities by probing, excavating, hydrovac, or by any other means.
C. CONTRACTOR shall notify all utility companies and governmental agencies who may have utility lines on or about the premises or who may be affected by the construction. Notice

shall be given no less than twenty-four hours prior to any work that may interfere with a utility.

D. All existing structures, improvement and utilities designated to remain shall be adequately protected from damage that might otherwise occur due to construction operations. Where construction comes in close proximity to existing structures, utilities or appurtenances, or if it becomes necessary to move services, poles, guy wires, pipe lines or other obstructions, CONTRACTOR shall notify and cooperate with the owner of the utility, structure, or appurtenance. The utility lines and other existing structures shown on the plans are for information only and are not guaranteed to be complete or accurate as to location and/or depth. CONTRACTOR shall be liable for damage to any utilities resulting from the CONTRACTOR's operations. During construction, all fire hydrants, valve boxes, fire or police call boxes and other existing utility controls shall be left intact, unobstructed and accessible unless noted on the plan.

E. Contractor shall satisfy themselves as to the actual existing subsurface conditions, including but not limited to the depth, location and sizes of pipe or conduits of various kinds in place prior to beginning work. Where the exact depth of any utility or obstruction is not shown on a plan, excavation shall be made prior to reaching the obstruction in order to determine adjustments in grade if needed to prevent interference. Redesign to eliminate conflicts may be necessary.

1.12 CONSTRUCTION CONTROL

A. Do not commence work until temporary erosion and sedimentation control measures are in place.

B. CONTRACTOR shall be responsible for properly laying out the work, and for lines and measurements for the work executed under the Contract Documents. Verify the figures shown on the Drawings before ordering any materials and laying out the work, and report errors or inaccuracies in writing to the ENGINEER before commencing work. The ENGINEER or his representative will in no case assume the responsibility for laying out the work.

C. Existing survey points other than those shown on the Drawings shall not be considered as acceptable control points unless approved by the ENGINEER. If approval is secured, CONTRACTOR remains responsible for maintaining them and for their accuracy. Be responsible for preserving all existing iron or metal, and all concrete survey points or monuments for the construction period.

1.13 PROJECT CONDTIONS

A. TRAFFIC

1. Obtain any required Work Zone Permits from the AHJ at least two (2) working days prior to the start of work and/or placing or removing any barricades or modifying existing traffic control devices.
2. CONTRACTOR shall be responsible for erecting and maintaining barricades and other traffic warning devices as necessary around the perimeter of construction and adjacent to any open trenches. Provide and maintain adequate detours around the work under construction. Provide sufficient lights, warning signs, and watchmen for the safety of the public.
3. Any temporary street closure shall be coordinated with and approved by the AHJ. CONTRACTOR shall establish all detour routes while streets are closed

during construction. CONTRACTOR shall notify Fire, Police, and EMSA headquarters when any street is temporarily closed.

4. CONTRACTOR is responsible for the prompt replacement and/or repair of all traffic control devices and appurtenances damaged or disturbed due to construction. Any existing traffic signals, signal loops, conduits, cables, and other traffic control devices affected by the work shall be reset or replaced according to AHJ's specifications. Coordinate the work with the AHJ's traffic department.

1.14 UTILITY INTERRUPTIONS

A. Do not interrupt any utility serving facilities occupied by Owner or others unless permitted by OWNER and the owner(s) of the utility. Temporary utility service shall be provided for any interruption. Notify OWNER and ENGINEER one week (7 days) in advance of proposed interruption of utility.

1.15 HAZARDOUS CONDITIONS

A. If CONTRACTOR encounters a Hazardous Environmental Condition or if CONTRACTOR or anyone for whom CONTRACTOR is responsible creates a Hazardous Environmental Condition, CONTRACTOR shall immediately: (i) secure or otherwise isolate such condition; (ii) stop all Work in connection with such condition and in any area affected thereby (except in an emergency); and (iii) notify OWNER and ENGINEER (and promptly thereafter confirm such notice in writing). OWNER shall promptly consult with ENGINEER concerning the necessity for OWNER to retain a qualified expert to evaluate such condition or take corrective action, if any.

PART 2 - PRODUCTS

2.01 PERFORMANCE REQUIREMENTS

A. Comply with governing CITY, STATE, and FEDERAL notification regulations before beginning SITE CLEARING. Comply with hauling and disposal regulations of authorities having jurisdiction.

2.02 MATERIALS

A. Satisfactory Soil Material: Requirements for satisfactory soil material are specified in Section 312300 "Excavation and Fill."

B. Obtain approved borrow soil material off-site when satisfactory soil material is not available on-site.

PART 3 - EXECUTION

3.01 PRE SITE CLEARING WORK

A. Contact OKIE (811 or 1-800-522-OKIE) prior to construction for locating existing utilities.

B. Notify all utility companies and governmental agencies who may have utility lines on or about the premises or who may be affected by the construction. Notice shall be given no less than twenty-four hours prior to any work that may interfere with a utility. CONTRACTOR shall also coordinate the construction activities with the utility companies to ensure compliance with the project schedule.

C. All existing structures, improvement and utilities designated to remain shall be adequately protected from damage that might otherwise occur due to construction operations. Where construction comes in close proximity to existing structures, utilities

or appurtenances, or if it becomes necessary to move services, poles, guy wires, pipe lines or other obstructions, CONTRACTOR shall notify and cooperate with the OWNER of the utility, structure, or appurtenance. The utility lines and other existing structures shown on the plans are for information only and are not guaranteed to be complete or accurate as to location and/or depth. CONTRACTOR shall be liable for damage to any utilities resulting from the CONTRACTOR's operations. During construction, all fire hydrants, valve boxes, fire or police call boxes and other existing utility controls shall be left intact, unobstructed and accessible unless noted on the plan.

D. CONTRACTOR shall satisfy themselves as to the actual existing subsurface conditions, including but not limited to the depth, location and sizes of pipe or conduits of various kinds in place prior to demolition. Where the exact depth of any utility or obstruction is not shown on a plan, excavation shall be made prior to reaching the obstruction in order to determine adjustments in grade if needed to prevent interference. Redesign to eliminate conflicts may be necessary.

E. Verify that utilities have been disconnected and capped before starting SITE CLEARING operations.

F. Protect and maintain benchmarks and survey control points from disturbance during construction.

G. Locate and clearly identify trees, shrubs, and other vegetation to remain.

H. Protect existing site improvements to remain from damage during construction.

1. Restore damaged improvements to their original condition, as acceptable to Owner.

3.02 CONSTRUCTION CONTROL

A. CONTRACTOR shall be responsible for properly laying out the work, and for lines and measurements for the work executed under the Contract Documents. Verify the figures shown on the Drawings before ordering any materials and laying out the work, and report errors or inaccuracies in writing to the ENGINEER before commencing work. The ENGINEER or his representative will in no case assume the responsibility for laying out the work.

B. Existing survey points other than those shown on the Drawings shall not be considered as acceptable control points unless approved by the ENGINEER. If approval is secured, CONTRACTOR remains responsible for maintaining them and for their accuracy. Be responsible for preserving all existing iron or metal, and all concrete survey points or monuments for the construction period.

3.03 TEMPORARY EROSION CONTROLS

A. See 31 25 00 Erosion and Sedimentation Controls.

B. Comply with the City, State, and Federal requirements for the minimization and control of sediment erosion and site run-off in storm water resulting from construction activities. Install temporary erosions controls prior to SITE CLEARING. Comply with the requirements of the Storm Water Pollution Prevention Plan and the permit(s) issued by the City and State.

3.04 CLEARING AND GRUBBING

A. The limits of the area(s) to be cleared and grubbed shall be marked by stakes, flags, tree markings, or other suitable methods.

B. Protect trees or groups of trees, designated to remain, from damage by all construction operations by erecting suitable barriers, or by other approved means. Clearing operations shall be conducted in a manner to prevent falling trees from damaging trees designated to remain.

C. Except as otherwise directed, cut, grub, remove and dispose of all trees, stumps, brush, shrubs, roots and any other objectionable material within the limits defined on the Plans.

D. All trees, stumps, brush, shrubs, roots and other objectionable material shall be cut, grubbed, removed and disposed of from areas to be occupied by buildings, structures, roads, pipelines and any other areas to be stripped. Trees and brush shall be removed to a depth at least three (5) feet below the existing grade.

E. In addition, heavy growths of weeds or other plants shall be stripped from the surface in order to provide clear access to the work site and to prevent their inclusion in stockpiled soil which is to be reused later. Trees, stumps, surface plants and all debris removed from the site shall be disposed of off-site by the CONTRACTOR at his own expense.

F. Areas outside the limits of clearing shall be protected from damage and no equipment or materials shall be stored in these areas.

G. No stumps, trees, limbs, or brush shall be buried in any fills or embankments.

3.05 SOIL STRIPPING AND STOCKPILING

A. Remove sod and grass before stripping topsoil.

B. Strip topsoil to depth of 6 inches in a manner to prevent intermingling with underlying subsoil or other waste materials.

1. Remove subsoil and non-soil materials from topsoil, including clay lumps, gravel, and other objects more than 2 inches in diameter; trash, debris, weeds, roots, and other waste materials.

C. Stockpile topsoil away from edge of excavations without intermixing with subsoil. Grade and shape stockpiles to drain surface water. Cover to prevent windblown dust and erosion by water.

1. Limit height of topsoil stockpiles to 72 inches.
2. Do not stockpile topsoil within protection zones.
3. Dispose of surplus topsoil. Surplus topsoil is that which exceeds quantity indicated to be stockpiled or reused.
4. Stockpile surplus topsoil to allow for re-spreading deeper topsoil.

3.06 SITE IMPROVEMENTS

A. Remove existing above- and below-grade improvements as indicated and necessary to facilitate new construction.

B. Remove slabs, paving, curbs, gutters, and aggregate base as indicated.

1. Unless existing full-depth joints coincide with line of demolition, neatly saw-cut a straight line of existing pavement to remain before removing adjacent existing pavement. Saw-cut faces vertically.
2. Paint cut ends of steel reinforcement in concrete to remain with two coats of antirust coating, following coating manufacturer's written instructions. Keep paint off surfaces that will remain exposed.

3.07 BACKFILL

A. Backfill any voids resulting from structures, vegetation, and objects removed according to 31 23 00 Excavation and Fill.

3.08 DISPOSAL OF MATERIALS

A. All tree trunks, limbs, roots, stumps, brush, foliage, other vegetation and objectionable material shall be removed from the site and disposed of in a permitted disposal site in a manner satisfactory to the Engineer.

B. Burning of cleared and grubbed materials will not be permitted.

C. Suitable excavated materials may be stockpiled to be used for backfilling. Excess excavated materials and unsuitable backfill materials shall be disposed offsite by the CONTRACTOR according to City, State, and Federal regulations.

END OF SECTION 31 10 00

SECTION 31 2200

GRADING

PART 1 GENERAL

1.01 RELATED DOCUMENTS

A. Drawings and general provisions of the Contract, including General and Supplementary Conditions and Division 01 Specification Sections, apply to this Section.

1.02 SUMMARY

A. The work under this section of the Specifications includes all labor, materials, equipment, and services necessary for GRADING as shown on the Drawings and herein specified and in accordance with the Contract Documents. All costs for labor, materials, equipment, and services necessary for GRADING shall be included in the bid prices for the work.

1.03 SECTION INCLUDES

1.04 RELATED SECTIONS

A. 31 2300 Excavation and Fill
B. 31 2500 Erosion and Sedimentation Controls

1.05 DEFINITIONS

A. AHJ – Authority Having Jurisdiction

1. City of Tahlequah
2. United State Environmental Protection Agency (USEPA)

1.06 ACTION SUBMITTALS

1.07 INFORMATIONAL SUBMITTALS

A. Photograph, video, or both the existing trees and plantings, adjoining construction, roadways, utilities, and site improvements to establish preconstruction conditions. Identify preexisting damage to trees, plantings, adjoining construction, pavements, sidewalks, and other site improvements. Include plans and notations to identify and describe any such conditions.

1.08 DELIVERY, STORAGE, AND HANDLING

1.09 QUALITY ASSURANCE

A. PRECONSTRUCTION CONFERENCE

1. Conduct a preconstruction conference. Subcontractors that will be performing the work shall attend the preconstruction conference. Notify ENGINEER one week (7 days) prior to the date of the meeting.

B. REGULATORY REQUIREMENTS

1. All materials and methods shall comply with the requirements of the AHJ.

1.10 PERMITS

A. CONTRACTOR shall make application; pay permit fees; provide payment and performance bonds required of the CONTRACTOR by the AHJ.

1.11 TOPOGRAPHIC SURVEY

A. OWNER has or will perform a survey of the site, stake the property limits, and provide a reference benchmark elevation.

1.12 UNDERGROUND UTILITIES

A. CONTRACTOR shall contact OKIE (811 or 1-800-522-OKIE) prior to construction for locating existing utilities.

B. The underground utilities shown on the Drawings have been located from field survey surface information and existing drawings. ENGINEER and Surveyor make no guarantee that the underground utilities shown comprise all such utilities in the area, either in service or abandoned. The underground utilities are located as accurately as possible from information available; however, ENGINEER and Surveyor further do not guarantee that the underground utilities shown are in the exact location indicated either vertically or horizontally. ENGINEER and Surveyor have not physically located the underground utilities by probing, excavating, hydrovac, or by any other means.

C. CONTRACTOR shall notify all utility companies and governmental agencies who may have utility lines on or about the premises or who may be affected by the construction. Notice shall be given no less than twenty-four hours prior to any work that may interfere with a utility.

D. All existing structures, improvement and utilities designated to remain shall be adequately protected from damage that might otherwise occur due to construction operations. Where construction comes in close proximity to existing structures, utilities or appurtenances, or if it becomes necessary to move services, poles, guy wires, pipe lines or other obstructions, CONTRACTOR shall notify and cooperate with the owner of the utility, structure, or appurtenance. The utility lines and other existing structures shown on the plans are for information only and are not guaranteed to be complete or accurate as to location and/or depth. CONTRACTOR shall be liable for damage to any utilities resulting from the CONTRACTOR's operations. During construction, all fire hydrants, valve boxes, fire or police call boxes and other existing utility controls shall be left intact, unobstructed and accessible unless noted on the plan.

E. Contractor shall satisfy themselves as to the actual existing subsurface conditions, including but not limited to the depth, location and sizes of pipe or conduits of various kinds in place prior to beginning work. Where the exact depth of any utility or obstruction is not shown on a plan, excavation shall be made prior to reaching the obstruction in order to determine adjustments in grade if needed to prevent interference. Redesign to eliminate conflicts may be necessary.

1.13 CONSTRUCTION CONTROL

A. Do not commence work until temporary erosion and sedimentation control measures are in place.

B. CONTRACTOR shall be responsible for properly laying out the work, and for lines and measurements for the work executed under the Contract Documents. Verify the figures shown on the Drawings before ordering any materials and laying out the work, and report errors or inaccuracies in writing to the ENGINEER before commencing work. The ENGINEER or his representative will in no case assume the responsibility for laying out the work.

C. Existing survey points other than those shown on the Drawings shall not be considered as acceptable control points unless approved by the ENGINEER. If approval is secured, CONTRACTOR remains responsible for maintaining them and for their accuracy. Be responsible for preserving all existing iron or metal, and all concrete survey points or monuments for the construction period.

1.14 PROJECT CONDITIONS

A. TRAFFIC

1. Obtain any required Work Zone Permits from the AHJ at least two (2) working days prior to the start of work and/or placing or removing any barricades or modifying existing traffic control devices.
2. CONTRACTOR shall be responsible for erecting and maintaining barricades and other traffic warning devices as necessary around the perimeter of construction and adjacent to any open trenches. Provide and maintain adequate detours around the work under construction. Provide sufficient lights, warning signs, and watchmen for the safety of the public.
3. Any temporary street closure shall be coordinated with and approved by the AHJ. CONTRACTOR shall establish all detour routes while streets are closed during construction. CONTRACTOR shall notify Fire, Police, and EMSA headquarters when any street is temporarily closed.
4. CONTRACTOR is responsible for the prompt replacement and/or repair of all traffic control devices and appurtenances damaged or disturbed due to construction. Any existing traffic signals, signal loops, conduits, cables, and other traffic control devices affected by the work shall be reset or replaced according to AHJ's specifications. Coordinate the work with the AHJ's traffic department.

B. UTILITY INTERRUPTIONS

1. Do not interrupt any utility serving facilities occupied by Owner or others unless permitted by OWNER and the owner(s) of the utility. Temporary utility service shall be provided for any interruption. Notify OWNER and ENGINEER one week (7 days) in advance of proposed interruption of utility.

C. SUBSURFACE CONDITIONS

1. A geotechnical report has been prepared for this Project and is available for information only. The opinions expressed in this report are those of geotechnical engineer and represent interpretations of subsoil conditions, tests, and results of analyses conducted by geotechnical engineer. Owner will not be responsible for interpretations or conclusions drawn from the data.

D. EXCAVATION AND TRENCH SAFETY SYSTEMS

1. CONTRACTOR shall be responsible for complying with State laws and Federal regulations relating to excavation and trench safety, including those which may be enacted during the performance under this Contract. CONTRACTOR is advised that Federal Regulations 29 C.F.R. 1926.650-1926.652 have been, in their most recent version as amended, in effect since January 2, 1990. CONTRACTOR shall fully comply with the U.S. Department of Labor Occupational Safety and Health Administration (OSHA) regulations pertaining to excavations, trenching, and shoring and shall provide and familiarize its employees involved in excavation and trenching with the provisions in OSHA Pamphlet Number 2226, Excavating and Trenching Operations.

1.15 HAZARDOUS CONDITIONS

A. If CONTRACTOR encounters a Hazardous Environmental Condition or if CONTRACTOR or anyone for whom CONTRACTOR is responsible creates a Hazardous Environmental Condition, CONTRACTOR shall immediately: (i) secure or otherwise isolate such condition; (ii) stop all Work in connection with such condition and in any area affected thereby (except in an emergency); and (iii) notify OWNER and ENGINEER (and promptly thereafter confirm such notice in writing). OWNER shall promptly consult with ENGINEER concerning

the necessity for OWNER to retain a qualified expert to evaluate such condition or take corrective action, if any.

PART 2 PRODUCTS

2.01 EQUIPMENT

A. Subgrade Planer

1. An approved subgrade planer shall be provided, mounted on visible rollers riding on the forms, having adjustable cutting blades which shall trim the subgrade to exact sections shown on the plans. Planer frames shall be heavy enough to remain on the forms at all times and shall be of such strength and rigidity that, under a test made by changing the support from the wheels to the center for the type pavements as set out under "Subgrade Planer," they shall not develop a deflection of more than 1/8 inch. Tractive power equipment used on the subgrade to pull the planer shall not be such as to produce ruts or indentations in the subgrade.

B. Subgrade Template

1. The template for checking the contour of the subgrade shall be provided and operated by the CONTRACTOR. The template shall rest upon the side forms and shall be of such strength and rigidity that, under a test made by changing the support to the center, it shall not develop a deflection of more than 1/8 inch. It shall be provided with accurately adjustable rods projecting downward to the subgrade at 1 foot intervals, and these rods shall be adjusted to the required cross-section when the template is resting on the side forms.

C. Compacting Equipment

1. Compacting equipment shall be designed to produce the pavement density and surface smoothness herein specified, and shall be maintained in first-class operating condition.

PART 3 EXECUTION

3.01 After the excavation and embankment has been substantially completed, the subgrade shall be brought to the proper alignment, cross section and elevation, so that after rolling and subsequent finishing operations, it shall conform to the correct alignment, cross section and elevation. Rolling and sprinkling shall be performed when and to the extent directed and the roadbed shall be completed to or above the plane of the typical section shown on the plans and the lines and grades established the by the OWNER.

3.02 After completion of the compaction and immediately before the application of base or pavement, the subgrade planer shall be operated from approved forms in a manner to finish the subgrade to the required section. The subgrade shall then be tested with the approved template, operated and maintained by the CONTRACTOR. All irregularities which develop in excess of 1/2 inch in a length of 16 feet measured longitudinally shall be corrected by loosening, adding or removing material; reshaping; and re-compacting by sprinkling and rolling.

3.03 The subgrade shall be maintained in a smooth, compacted condition, in conformity with the required section and established grade, until the base or pavement is placed, and shall be kept wetted down sufficiently in advance of placing any base or pavement to insure its being in a firm and moist condition for at least 2 inch below surface of the prepared subgrade. Only such subgrade as is necessary for the satisfactory prosecution of the work shall be completed ahead of the placement of base or pavement. Hauling or operating of unnecessary equipment on the completed

subgrade shall be kept to a minimum. Complete drainage of the subgrade shall be provided at all times.

3.04 Finishing of the subgrade by hand shall be permitted on sections where the pavement width is not uniform, at intersections and elsewhere where the operation of the subgrade planer would not be practical. Subgrade finished by hand shall conform to the requirements above specified.

3.05 Uniformly grade areas to a smooth surface, free of irregular surface changes. Comply with compaction requirements and grade to cross sections, lines, and elevations indicated.

A. Provide a smooth transition between adjacent existing grades and new grades.
B. Cut out soft spots, fill low spots, and trim high spots to comply with required surface tolerances.

3.06 Site Rough Grading: Slope grades to direct water away from buildings and to prevent ponding. Finish subgrades to required elevations within the following tolerances:

A. Turf or Unpaved Areas: Plus or minus 1 inch.
B. Walks: Plus or minus 1 inch.
C. Pavements: Plus or minus 1/2 inch.

3.07 Grading inside Building Lines: Finish subgrade to a tolerance of 1/2 inch when tested with a 10-foot straightedge.

END OF SECTION 31 2200

SECTION 31 2311

EARTHWORK FOR BUILDING CONSTRUCTION

PART 1 - GENERAL

1.1 WORK INCLUDED

A. The work covered by this Section consists of furnishing all plant, labor, equipment, appurtenances and material in performing all operations, hauling, placing, spreading, watering, processing, compacting and shaping earth sections, within the building limits, complete in place in accordance with the Project Manual and Drawings.

1.2 RELATED WORK ELSEWHERE

A. Site Clearing - Section 31 1000

B. Under-Slab Vapor Retarder – Section 07 2600

C. General Foundation Notes on Drawings.

D. Project Soils Report – shall be completely reviewed and understood by the contractor. In case of conflict or omission, the Project Soils Report shall govern.

1.3 SUBSURFACE SOIL DATA

A. Subsurface soil investigations have been made and the results are available for examination by the Contractor. This is not a warranty of conditions; the Contractor is expected to examine the site and determine for himself the character of materials to be encountered.

B. No additional allowance will be made for rock removal, site clearing and grading, filling, compaction, disposal, or removal of any unclassified materials.

1.4 REFERENCES

A. ASTM International, latest versions.

1.	ASTM D 1556	Standard Test Method for Density of Soil in Place by the Sand-Cone Method
2.	ASTM D 698	Standard Test Methods for Laboratory Compaction Characteristics of Soil Using Standard effort (12,400 ft-lbf/ft^3)(600kN-m/m^3))]
3.	ASTM D 4318	Test Methods for Liquid Limit, Plastic Limit, and Plasticity Index of Soils
4.	ASTM D 6938	Standard Test Method for In-Place Density and Water Content of Soil and Soil-Aggregate by Nuclear Methods (Shallow Depth)

1.5 SUBMITTALS

A. Submit copies of materials certificates and test results for materials in accordance with type of tests, frequencies and remarks as outlined in the sampling and testing schedule.

1.6 TESTING AND INSPECTION

A. General: The Owner shall employ the services of a registered, licensed Geotechnical Engineer to observe all controlled earthwork soil testing. The testing laboratory shall provide continuous on-site observation by experienced personnel during construction of fill material. The Contractor shall notify the testing laboratory at least two working days in advance of any field operations of controlled earthwork, or of any resumption of operations after stoppages.

B. Report of Field Density Tests

1. The Geotechnical Engineer shall submit, daily, the results of field density tests required by these specifications.

C. Costs of Tests and Inspection

1. The cost of testing, inspecting and engineering, as specified in this section of the specifications, shall be borne by the Owner.

D. Lines and Grades: Alignment and grade of all elements shall be made on true tangents and curves. Grades shall conform to the elevations indicated on Drawings, with minor adjustments, to provide a smooth approach at building lines, at connections to existing paving and to provide proper drainage. Correct irregularities at no cost to the Owner.

1.7 WEATHER LIMITATIONS

A. Controlled fill shall not be constructed when the atmospheric temperature is below 35 degrees F. When the temperature falls below 35 degrees, it shall be the responsibility of the Contractor to protect all areas of completed work against any detrimental effects of ground freezing by methods approved by the testing laboratory. Any areas that are damaged by freezing shall be reconditioned, reshaped, and compacted by the Contractor in conformance with the requirements of this specification without additional cost to the Owner.

PART 2 - PRODUCTS

2.1 STRUCTURAL FILL MATERIAL

A. On-Site Soils / Imported Fill: GC, SC, SW or GW.

B. Low volume Change (LVC) Engineered Fill: CL, GC or SC (LL<50).

a. CL materials shall not be placed below slabs or foundations.

C. On-Site Soils: CH - **SHALL NOT BE PLACED WITHIN UPPER 2 FEET BENEATH FOUNDATIONS, FLOOR SLABS AND PAVEMENTS**.

D. On-Site Soils: ML soils are only considered suitable as controlled fill if containing at least 35% gravel sized particles.

E. Material shall consist of soils that conform to the following physical characteristics:

Sieve Size Sq. Openings	Percent Passing By Weight
12 inch*	100
No. 200	85 or less

* or lift thickness whichever is less

F. The liquid limit of the material to be used for fill within 2 feet of bottom of foundations or slabs or backfill, as determined in accordance with ASTM D 4318 shall not exceed 50.

PART 3 - EXECUTION

3.1 PREPARATION

A. Clearing and Grubbing: Prior to placing structural fill all borrow areas and areas to receive structural fill shall be stripped of vegetation and deleterious materials. Strippings shall be hauled offsite or stockpiled for subsequent use in landscaped areas or non-structural fill areas as designated by the Owner or his representative and approved by the Geotechnical Engineer.

3.2 CONSTRUCTION AREA TREATMENT

A. Site Preparation - Fill Areas: Prior to placing structural fill the areas to be filled shall be scarified to a depth of eight inches and moisture conditioned as described below. The area to be filled shall then be compacted to a minimum of 95 percent of standard proctor density as determined in accordance with ASTM D 698. Any soft or "spongy" areas shall be removed as directed by the Geotechnical Engineer and replaced with structural fill as described herein.

B. Site Preparation - Cut Areas: Following excavation to rough grade all building and pavement areas shall be scarified to a depth of eight inches and moisture conditioned as described below. All building and paved areas shall be compacted to a minimum of 95 percent of standard proctor density as determined by ASTM D 698.

3.3 EQUIPMENT AND METHODS

A. In areas not accessible to heavy equipment, distribute by and compact with hand operated vibratory compactors.

3.4 BORROW

A. The Contractor shall provide sufficient material for fill to the lines, elevations and cross sections as shown on the contract drawings from borrow areas.

B. The Contractor shall obtain from the Owners of said borrow areas the right to excavate material, shall pay all royalties and other charges involved, and shall pay all expenses in developing the source including the cost of right-of-way required for hauling the material.

3.5 COMPACTION

A. Fill shall be spread in layers not exceeding 12 inches (loose), watered as necessary, and compacted. Moisture content at time of compaction shall plus/minus 2 percent of optimum moisture for CL, SC, GC, GW and SW soil types and 0-4% above optimum for CH soil types. A density of not less than 95 percent of maximum dry density shall be obtained within the building pads.

B. Optimum moisture content and maximum dry density for each soil type used shall be determined in accordance with ASTM D 698.

C. Compaction of the fill shall be by mechanical means only. Where vibratory compaction equipment is used, it shall be the Contractor's responsibility to ensure that the vibrations do not damage nearby buildings or other adjacent property. Where vibratory compaction is not possible, pneumatic rolling equipment shall be used.

MATERIAL	MINIMUM PERCENT COMPACTION
Structural & granular fill in construction area	95
Subgrade below structural fill	95
Structural fill under exterior walls	95
Miscellaneous backfill	90

3.6 MOISTURE CONTROL

A. The material moisture content, while being compacted, shall be plus/minus 2 percent of optimum moisture for CL, SC, GC, GW and SW soil types and 0-4% above optimum for CH soil types.

3.7 DENSITY REQUIREMENTS

A. Density of undisturbed soils, in-place fill and backfill shall be determined in accordance with the procedures of ASTM D 1556 or ASTM D 6938. If tests indicate that the density of in-place soil is less than required, the material shall be scarified, moistened or dried as necessary to obtain proper moisture content and recompacted as necessary to achieve the proper densities. Sufficient density tests shall be made and reports submitted by the Testing Laboratory indicating all cut and fill areas were compacted and graded in accordance with the requirements.

3.8 SLOPE PROTECTION & DRAINAGE

A. Berming and grading shall be done as may be necessary to prevent surface water from flowing into and out of the construction area. Any water accumulating therein shall be removed by pumping or by other methods.

3.9 SOIL EROSION PROTECTION

A. The Contractor shall ensure that no soil erodes or blows from the site into public right-of-way or onto private property.

B. The Contractor shall promptly clean up any material which erodes or blows into the public right-of-way or onto private property.

3.10 PRESERVATION OF PROPERTY

A. Provide temporary fences, barricades, coverings, or other protections to preserve existing items indicated to remain and to prevent injury or damage to persons or property. Apply protections to adjacent properties as required.

B. Restore damaged work to condition existing prior to start of work, unless otherwise directed.

3.11 EXISTING UTILITIES

A. The Contractor shall verify the location of any utility lines, pipelines, or underground utility lines in or near the area of the work in advance of and during Earthwork. The Contractor is fully responsible for any and all damage caused by failure to locate, identify and preserve any and all existing utilities, pipelines and underground utility lines. Repair damaged utilities to the satisfaction of the utility owner at no expense to the Owner.

B. Should uncharted or incorrectly charted piping or other utilities be encountered during grading, consult the Architect immediately for directions as to procedures.

C. Cooperate with the Owner and public or private utility companies in keeping service and facilities in operation.

3.12 WASTE

A. Dispose of all waste off Owner's property.

B. Burning of waste will not be permitted.

3.13 AIR POLLUTION

A. Use water sprinkling, temporary enclosures, and other suitable methods to limit dust and dirt air pollution. Comply with governing regulations pertaining to environmental protection.

SAMPLING AND TESTING SCHEDULE FOR EARTHWORK

FIELD QUALITY CONTROL

MATERIAL	TEST FOR	FREQUENCY	REMARKS
NATURAL GROUND	Compaction in accordance with ASTM D 1556 or ASTM D 6938	1 per 2500 square feet of surface	Conduct a minimum of 3 tests on each section.
EMBANKMENT AND/OR SUBGRADE	Soil Conditions Moisture-Density in accordance with ASTM D 698	Test 1 per soil classification	
	Compaction control in accordance with ASTM D 1556 or ASTM D 6938	1 per each lift every 2500 square feet of surface	Immediately after placing, Conduct a minimum of 3 tests per section
		1 per each lift for each 2500 square feet of fill	

END OF SECTION

SECTION 31 2500

EROSION AND SEDIMENTATION CONTROLS

PART 1 - GENERAL

1.01 RELATED DOCUMENTS

1. Drawings and general provisions of the Contract, including General and Supplementary Conditions and Division 01 Specification Sections, apply to this Section.

1.02 SUMMARY

1. The work under this section of the Specifications includes all labor, materials, equipment, and services necessary for EROSION AND SEDIMENTATION CONTROLS as shown on the Drawings and herein specified and in accordance with the Contract Documents. All costs for labor, materials, equipment, and services necessary for EROSION AND SEDIMENTATION CONTROLS shall be included in the bid prices for the work.

1.03 SECTION INCLUDES

1.04 RELATED SECTIONS

1. 31 1000 Site Clearing
2. 31 2300 Excavation and Fill

1.05 DEFINITIONS

1. AHJ – Authority Having Jurisdiction

A. City of Tahlequah
B. United States Environmental Protection Agency (USEPA)
C. Oklahoma Department of Environmental Quality (ODEQ)

1.06 ACTION SUBMITTALS

1.07 INFORMATIONAL SUBMITTALS

1.08 DELIVERY, STORAGE, AND HANDLING

1.09 QUALITY ASSURANCE

1. PRECONSTRUCTION CONFERENCE

A. Conduct a preconstruction conference. Subcontractors that will be performing the work shall attend the preconstruction conference. Notify ENGINEER one week (7 days) prior to the date of the meeting.

2. REGULATORY REQUIREMENTS

A. All materials and methods shall comply with the requirements of the AHJ.
B. If the AHJ has not adopted specifications for materials and methods, the Oklahoma Department of Transportation's 2009 Specifications shall be used.

1.10 PERMITS

1. CONTRACTOR shall make application; pay permit fees; provide payment and performance bonds required of the CONTRACTOR by the AHJ.

1.11 TOPOGRAPHIC SURVEY

1. OWNER has or will perform a survey of the site, stake the property limits, and provide a reference benchmark elevation.

1.12 UNDERGROUND UTILITIES

1. CONTRACTOR shall contact OKIE (811 or 1-800-522-OKIE) prior to construction for locating existing utilities.

2. The underground utilities shown on the Drawings have been located from field survey surface information and existing drawings. ENGINEER and Surveyor make no guarantee that the underground utilities shown comprise all such utilities in the area, either in service or abandoned. The underground utilities are located as accurately as possible from information available; however, ENGINEER and Surveyor further do not guarantee that the underground utilities shown are in the exact location indicated either vertically or horizontally. ENGINEER and Surveyor have not physically located the underground utilities by probing, excavating, hydrovac, or by any other means.
3. CONTRACTOR shall notify all utility companies and governmental agencies who may have utility lines on or about the premises or who may be affected by the construction. Notice shall be given no less than twenty-four hours prior to any work that may interfere with a utility.
4. All existing structures, improvement and utilities designated to remain shall be adequately protected from damage that might otherwise occur due to construction operations. Where construction comes in close proximity to existing structures, utilities or appurtenances, or if it becomes necessary to move services, poles, guy wires, pipe lines or other obstructions, CONTRACTOR shall notify and cooperate with the owner of the utility, structure, or appurtenance. The utility lines and other existing structures shown on the plans are for information only and are not guaranteed to be complete or accurate as to location and/or depth. CONTRACTOR shall be liable for damage to any utilities resulting from the CONTRACTOR's operations. During construction, all fire hydrants, valve boxes, fire or police call boxes and other existing utility controls shall be left intact, unobstructed and accessible unless noted on the plan.
5. Contractor shall satisfy themselves as to the actual existing subsurface conditions, including but not limited to the depth, location and sizes of pipe or conduits of various kinds in place prior to beginning work. Where the exact depth of any utility or obstruction is not shown on a plan, excavation shall be made prior to reaching the obstruction in order to determine adjustments in grade if needed to prevent interference. Redesign to eliminate conflicts may be necessary.

1.13 CONSTRUCTION CONTROL

1. CONTRACTOR shall be responsible for properly laying out the work, and for lines and measurements for the work executed under the Contract Documents. Verify the figures shown on the Drawings before ordering any materials and laying out the work, and report errors or inaccuracies in writing to the ENGINEER before commencing work. The ENGINEER or his representative will in no case assume the responsibility for laying out the work.
2. Existing survey points other than those shown on the Drawings shall not be considered as acceptable control points unless approved by the ENGINEER. If approval is secured, CONTRACTOR remains responsible for maintaining them and for their accuracy. Be responsible for preserving all existing iron or metal, and all concrete survey points or monuments for the construction period.

PART 2 - PRODUCTS

2.01 SILT FENCE FABRIC

1. Provide fabric for temporary silt fence in accordance with AASHTO M 288, “Temporary Silt Fence Property Requirements” Table 6 for unsupported silt fence with less than 50 percent elongation.

2.02 SILT FENCE POSTS

1. Minimum 5 feet long:
2. Steel U- or T-section, with minimum mass of 1.33 lb per linear foot.

2.03 TEMPORARY CONSTRUCTION FENCE

1. Provide plastic mesh fencing supported by steel posts driven into ground.
   A. Height: 36 inch minimum.
   B. Color: Safety orange.

PART 3 - EXECUTION

3.01 EROSION AND SEDIMENT CONTROLS, GENERAL

1. Construction and placement of erosion and sediment control devices shall be performed in conjunction with the progress of general construction. Contractor shall install the erosion control devices shown and install additional erosion control devices as necessary to prevent silt runoff from the work area onto adjacent areas.
2. The erosion and sediment controls to be used for this site are:
   A. Temporary construction entrance/exit - stabilized construction entrances shall be installed at all points where construction or employee vehicles enter or leave the construction or staging areas.
   B. Rock bag filter berms - rock bag filter berms shall be placed in small open channels. The berms shall be placed so that the toe of the upstream dam is at the same elevation as the top of the downstream dam.
   C. Rock bag inlet barrier - rock bag inlet barriers shall be placed around all inlets proposed and existing that are receiving runoff from the site.
   D. Silt fences - silt fences shall be placed along the perimeter of the project where storm water will exit the site. Silt fences shall also be utilized along slope contours where vegetative cover is not sufficiently established to prevent erosion.
   E. Sodding/site seeding - sodding and seeding shall be used to establish final vegetative cover.
3. The following are some other controls that may be used in the course of this project.
   A. Common vegetative practices
      1. Temporary seeding, mulching, permanent seeding and planting, preservation of natural vegetation, dust control
   B. Structural erosion and sediment control practices
      1. Silt fence, storm drain inlet protection, outlet protection, berms for fuel storage and dispensing areas
4. Additional controls not listed above may also be considered for use.

3.02 OTHER CONTROLS

1. The premises and the job site shall be maintained in a reasonably neat and orderly condition and kept free from accumulations of waste materials and rubbish during the entire construction period. Remove crates, cartons, and flammable waste materials or trash from the work areas at the end of each working day.
2. Pavement on-site and on adjoining streets shall be kept free of any sediment or mud tracking from truck tires or from other equipment.
3. Chemical toilets for the use of all construction personnel shall be provided at a location within the limits of the site. Chemical toilets shall be maintained in a sanitary condition.
4. Any disposal of construction wastes, hazardous products, and contaminated soils shall be disposed of according to requirements of the City, County, ODEQ, and the U.S. Environmental Protection Agency.
5. The wheels of vehicles leaving the construction areas shall be cleaned of mud prior to leaving the construction or staging areas. Wheel washing shall be performed in an area stabilized with stone that drains into an approved sediment trapping device.

6. Adequate controls shall be made to prevent and/or control any release of pesticides, petroleum products, fertilizers and detergents, and hazardous products.
7. Any spill of pesticides, petroleum products, fertilizers and detergents, and hazardous products shall be contained and removed according to state and federal requirements. Any spill of pesticides, petroleum products, fertilizers and detergents, and hazardous products shall be reported according to state and federal requirements.

3.03 STORM WATER POLLUTION PREVENTION PLAN

1. A Storm Water Pollution Prevention plan (SWP3) has been prepared for the work. Contractor shall implement the SWP3, and construct, inspect, and maintain the erosion controls to prevent runoff of silt and sediment from the site. A copy of the SWP3 shall be kept at the site at all times and be made available to inspectors upon request. Inspections reports shall be maintained in the swp3 and the swp3 shall be updated when necessary.

3.04 POSTING OF PUBLIC NOTICE

1. Contractor shall be responsible for posting public notice. the notice shall be posted near the main entrance of the construction site that indicates the following information:
    A. The permit number for the project or a copy of the NOI if a permit number has not yet been assigned.
    B. The name and telephone number of a local contact person.
    C. A brief description of the project.
    D. The location of this SWP3 if the site is inactive or does not have an on-site location to store the plan.

3.05 SCOPE OF PREVENTIVE MEASURES

1. In all cases, if permanent erosion resistant measures have been installed temporary preventive measures are not required.
2. Construction Entrances:
    A. Width: As required; 20 feet, minimum.
    B. Length: 50 feet, minimum.
    C. Provide at each construction entrance from public right-of-way.
    D. Where necessary to prevent tracking of mud onto right-of-way, provide wheel washing area out of direct traffic lane, with drain into sediment trap or basin.
3. Linear Sediment Barriers: Made of silt fences.
    A. Provide linear sediment barriers:
        1. Along downhill perimeter edge of disturbed areas, including soil stockpiles.
        2. Along the top of the slope or top bank of drainage channels and swales that traverse disturbed areas.
        3. Along the toe of cut slopes and fill slopes.
        4. Perpendicular to flow across the bottom of existing and new drainage channels and swales that traverse disturbed areas or carry runoff from disturbed areas; space at maximum of 200 feet apart.
        5. Across the entrances to culverts that receive runoff from disturbed areas.
    B. Space sediment barriers with the following maximum slope length upslope from barrier:
        1. Slope of Less Than 2 Percent: 100 feet.
        2. Slope between 2 and 5 Percent: 75 feet.
        3. Slope between 5 and 10 Percent: 50 feet.
        4. Slope between 10 and 20 Percent: 25 feet.

5. Slope over 20 Percent: 15 feet.

C. Soil Stockpiles: Protect using one of the following measures:
   1. Cover with polyethylene film, secured by placing soil on outer edges.
   2. Cover with mulch at least 4 inches thickness of pine needles, sawdust, bark, wood chips, or shredded leaves, or 6 inches of straw or hay.

D. Temporary Seeding: Use where temporary vegetated cover is required.

3.06 INSTALLATION

1. Traffic-Bearing Aggregate Surface:

   A. Excavate minimum of 6 inches.
   B. Place geotextile fabric full width and length, with minimum 12 inch overlap at joints.
   C. Place and compact at least 6 inches of 1.5 to 3.5 inch diameter stone.

2. Temporary Construction Fences:

   A. Space steel support posts to insure mesh remains vertical and at proper height. Securely tie to posts.

3. Silt Fences:

   A. Store and handle fabric in accordance with ASTM D 4873.
   B. Where slope gradient is less than 3:1 or barriers will be in place less than 6 months, use nominal 16 inch high barriers with minimum 36 inch long posts spaced at 6 feet maximum, with fabric embedded at least 4 inches in ground.
   C. Where slope gradient is steeper than 3:1 or barriers will be in place over 6 months, use nominal 28 inch high barriers, minimum 48 inch long posts spaced at 6 feet maximum, with fabric embedded at least 6 inches in ground.
   D. Where slope gradient is steeper than 3:1 and vertical height of slope between barriers is more than 20 feet, use nominal 32 inch high barriers with woven wire reinforcement and steel posts spaced at 4 feet maximum, with fabric embedded at least 6 inches in ground.
   E. Install with top of fabric at nominal height and embedment as specified.
   F. Do not splice fabric width; minimize splices in fabric length; splice at post only, overlapping at least 18 inches, with extra post.
   G. Fasten fabric to steel posts using wire, nylon cord, or integral pockets.
   H. Wherever runoff will flow around end of barrier or over the top, provide temporary splash pad or other outlet protection; at such outlets in the run of the barrier, make barrier not more than 12 inches high with post spacing not more than 4 feet.

4. Temporary Seeding:

   A. When hydraulic seeder is used, seedbed preparation is not required.
   B. When surface soil has been sealed by rainfall or consists of smooth undisturbed cut slopes, and conventional or manual seeding is to be used, prepare seedbed by scarifying sufficiently to allow seed to lodge and germinate.
   C. If temporary mulching was used on planting area but not removed, apply nitrogen fertilizer at 1 pound per 1000 sq ft.
   D. On soils of very low fertility, apply 10-10-10 fertilizer at rate of 12 to 16 pounds per 1000 sq ft.
   E. Incorporate fertilizer into soil before seeding.
   F. Apply seed uniformly; if using drill or cultipacker seeders place seed 1/2 to 1 inch deep.
   G. Irrigate as required to thoroughly wet soil to depth that will ensure germination, without causing runoff or erosion.

H. Repeat irrigation as required until grass is established.

3.07 MAINTENANCE

1. All erosion and sediment control measures and other protective measures shall be maintained in effective operating condition. If site inspections identify erosion controls that are not operating effectively, maintenance shall be performed before the next anticipated storm event, or as necessary to maintain the continued effectiveness of storm water controls. If maintenance prior to the next anticipated storm event is impracticable, maintenance must be scheduled and accomplished as soon as practicable.
2. If sediment escapes the construction site, off-site accumulations of sediment shall be removed at a frequency sufficient to minimize offsite impacts (e.g., fugitive sediment in street could be washed into storm sewers by the next rain and/or pose a safety hazard to users of public streets).
3. Sediment shall be removed from sediment traps or sedimentation ponds when the design capacity has been reduced by 50%.
4. Litter, construction debris, and construction chemicals exposed to storm water shall be prevented from becoming a pollutant source for storm water discharges (e.g., screening outfalls, picked up daily).

3.08 INSPECTIONS

1. Contractor shall inspect disturbed areas of the construction site that have not been finally stabilized, areas used for storage of materials that are exposed to precipitation, structural control measures, and locations where vehicles enter or exit the site, at least once every fourteen (14) calendar days and within 24 hours of the end of a storm event of 0.25 inches or greater.
2. The following items, locations, and areas shall be inspected.
   A. Disturbed areas and areas used for storage of materials that are exposed to precipitation shall be inspected for evidence of, or the potential for, pollutants entering the drainage system.
   B. Sediment and erosion control measures shall be observed to ensure that they are operating correctly.
   C. Where discharge locations or points are accessible, they shall be inspected to ascertain whether erosion control measures are effective in preventing significant impacts to receiving waters.
   D. Where discharge locations are inaccessible, nearby downstream locations shall be inspected to the extent that such inspections are practicable.
   E. Locations where vehicles enter or exit the site shall be inspected for evidence of offsite sediment tracking.

3.09 REPORTS

1. A report summarizing the scope of the inspection, name(s) and qualifications of personnel making the inspection, the date(s) of the inspection, and major observations relating to the implementation of erosion controls shall be made.
2. major observations should include: the location(s) of discharges of sediment or other pollutants from the site; location(s) of erosion controls that need to be maintained; location(s) of erosion controls that failed to operate as designed or proved inadequate for a particular location; and location(s) where additional erosion controls are needed that did not exist at the time of inspection.
3. Modifications made to erosion controls as a result of inspections shall be recorded.
4. Reports shall identify any incidents of noncompliance.

5. Where a report does not identify any incidents of noncompliance, the report shall contain a certification that the facility is in compliance with the storm water pollution prevention plan and this permit. The owner or contractor shall sign the report.
6. Any person signing the report shall make the following certification. I certify under penalty of law that this document and all attachments were prepared under my direction or supervision in accordance with a system designed to assure that qualified personnel properly gathered and evaluated the information submitted. Based on my inquiry of the person or persons who manage the system, or those persons directly responsible for gathering the information, the information submitted is, to the best of my knowledge and belief, true, accurate, and complete. I am aware that there are significant penalties for submitting false information, including the possibility of fine and imprisonment for knowing violations.
7. Inspection reports shall be maintained on site.

3.10 MODIFICATIONS OR ADDITIONS TO EROSION CONTROLS

1. Based on the results of the inspection, erosion controls shall be modified as necessary or additional control shall be provided to correct the problems identified. If existing erosion controls need to be modified or if additional controls are necessary, implementation shall be completed before the next anticipated storm event. If implementation before the next anticipated storm event is impracticable, they shall be implemented as soon as practicable.

3.11 STABILIZATION REQUIREMENTS

1. Fine grading shall be performed according to the grading plan.
2. All areas disturbed during the course of construction shall be revegetated according to the landscaping plan. If a landscaping plan is not provided, the disturbed areas shall be seeded or hydro-mulched.
3. Except where the landscaping plan identifies other grasses, groundcover, plants, or shrubs to be planted, a 4 ft wide strip of Bermuda grass sod shall be placed behind all curbs.
4. Contractor shall provide sufficient water and fertilizer to establish the sufficient growth of sod and seeds until final stabilization of the area is achieved.
5. Stabilization measures shall be initiated as soon as practicable in portions of the site where construction activities have temporarily or permanently ceased, but in no case more than 14 days after the construction activity in that portion of the site has temporarily or permanently ceased.
6. where the initiation of stabilization measures by the 14th day after construction activity temporary or permanently ceases is precluded by snow cover or frozen ground conditions, stabilization measures shall be initiated as soon as practicable
7. Where construction activity on a portion of the site is temporarily ceased, and earth-disturbing activities will be resumed within 21 days, temporary stabilization measures do not have to be initiated on that portion of site.
8. in areas experiencing droughts where the initiation of stabilization measures by the 14th day after construction activity has temporarily or permanently ceased is precluded by seasonal arid conditions, stabilization measures shall be initiated as soon as practicable.
9. Temporary seeding or hydro-mulching may be used for temporary stabilization, if necessary.

3.12 CONSTRUCTION COMPLETION AND FINAL STABILIZATION

1. Contractor shall remove all temporary erosion control structures upon completion of construction and the establishment of final stabilization.
2. Final stabilization shall be complete when all soil disturbing activities at the site have been completed and a uniform (e.g., evenly distributed, without large bare areas) perennial

vegetative cover with a density of 70% of the native background vegetative cover for the area has been established on all unpaved areas and areas not covered by permanent structures, or equivalent permanent stabilization measures (such as the use of riprap, gabions, or geotextiles) have been employed.

END OF SECTION 31 25 00

SECTION 313116

TERMITE CONTROL

PART 1 - GENERAL

1.1 SUMMARY

A. Work required for this Section includes soil treatment for termite control including supplementary Work necessary for its installation.

1.2 DEFINITIONS

A. EPA: Environmental Protection Agency.

B. PCO: Pest control operator.

1.3 ACTION SUBMITTALS

A. Product Data: Treatments and application instructions, including EPA-Registered Label.

1.4 INFORMATIONAL SUBMITTALS

A. Product Certificates: Signed by manufacturers of termite control products certifying that treatments furnished comply with requirements.

B. Soil Treatment Application Report: After application of termiticide is completed, submit report for Owner's record information, including the following as applicable:

1. Date and time of application.
2. Moisture content of soil before application.
3. Brand name and manufacturer of termiticide.
4. Quantity of undiluted termiticide used.
5. Dilutions, methods, volumes, and rates of application used.
6. Areas of application.
7. Water source for application.

C. Qualification Data:

1. For firms and persons specified in "Quality Assurance" to demonstrate their capabilities and experience. Include list of completed projects.

D. Warranties: Special warranties specified in this Section.

1.5 QUALITY ASSURANCE

A. Applicator Qualifications: A PCO who is licensed according to regulations of authorities having jurisdiction to apply termite control treatment in jurisdiction where Project is located and who is experienced and has completed termite control treatment similar to that indicated for this Project and whose work has a record of successful in-service performance.

B. Regulatory Requirements: Formulate and apply termiticides, and label with a Federal registration number, to comply with EPA regulations and authorities having jurisdiction.

1.6 PROJECT CONDITIONS

A. Environmental Limitations: To ensure penetration, do not treat soil that is water saturated or frozen. Do not treat soil while precipitation is occurring. Comply with EPA-Registered Label requirements and requirements of authorities having jurisdiction.

1.7 COORDINATION

A. Coordinate soil treatment application with excavating, filling, and grading and concreting operations. Treat soil under footings, grade beams, and ground-supported slabs, before construction.

1.8 WARRANTY

A. Special Warranty: Written warranty, signed by applicator and Contractor certifying that termite control work, consisting of applied soil termiticide treatment, will prevent infestation of subterranean termites. If subterranean termite activity or damage is discovered during warranty period, re-treat soil and repair or replace damage caused by termite infestation.

B. Warranty Period: Five years from date of Substantial Completion.

1.9 MAINTENANCE SERVICE

A. Continuing Service: Provide a proposal for continuing service, including monitoring, inspection, and retreatment for occurrences of termite activity, from applicator to Owner, in the form of a standard yearly (or other period) continuing service agreement, starting on the date of Substantial Completion. State services, obligations, conditions, and terms for agreement period and for future renewal options.

PART 2 - PRODUCTS

2.1 SOIL TREATMENT

A. Termiticide: Provide an EPA-registered termiticide complying with requirements of authorities having jurisdiction, in a soluble or emulsible, concentrated formulation that dilutes with water or foaming agent, and formulated to prevent termite infestation. Use only soil treatment solutions that are not harmful to plants. Provide quantity required for application at the label volume and rate for the maximum termiticide concentration allowed for each specific use, according to the product's EPA-Registered Label.

PART 3 - EXECUTION

3.1 EXAMINATION

A. Examine substrates, areas, and conditions, with Applicator present, for compliance with requirements for moisture content of the soil, interfaces with earth moving, slab and foundation work, landscaping, and other conditions affecting performance of termite control.

B. Proceed with application only after unsatisfactory conditions have been corrected. Starting of Work will be construed as installers acceptance of installation conditions.

3.2 PREPARATION

A. General: Comply with the most stringent requirements of authorities having jurisdiction and with manufacturer's written instructions for preparing substrate. Remove all extraneous sources of wood cellulose and other edible materials such as wood debris, tree stumps and roots, stakes, formwork, and construction waste wood from soil and around foundations.

B. Soil Treatment Preparation: Remove foreign matter and impermeable soil materials that could decrease treatment effectiveness on areas to be treated. Loosen, rake, and level soil to be treated, except previously compacted areas under slabs and footings. Termiticides may be applied before placing compacted fill under slabs if recommended by termiticide manufacturer.

C. Fit filling hose connected to water source at the site with a backflow preventer, complying with requirements of authorities having jurisdiction.

3.3 APPLYING SOIL TREATMENT

A. General: Apply soil treatment under all enclosed structures. Comply with the most stringent requirements of authorities having jurisdiction and with manufacturer's EPA-Registered Label for products.

B. Application: Mix soil treatment termiticide solution to a uniform consistency. Provide quantity required for application at the label volume and rate for the maximum specified concentration of termiticide, according to manufacturer's EPA-Registered Label, to the following so that a continuous horizontal and vertical termiticidal barrier or treated zone is established around and under building construction. Distribute the treatment evenly.

C. Slabs-on-Grade and Basement Slabs: Under ground-supported slab construction, including footings, building slabs, and attached slabs as an overall treatment. Treat soil materials before concrete footings and slabs are placed.

D. Foundations: Adjacent soil including soil along entire inside perimeter of foundation walls, along both sides of interior partition walls, around plumbing pipes and electric conduit penetrating slab, and around interior column footers, piers, and chimney bases; and along entire outside perimeter, from grade to bottom of footing. Avoid soil washout around footings.

E. Crawlspaces: Soil under and adjacent to foundations as previously indicated.

F. Adjacent Areas: Around entrance platform, porches, and equipment bases. Apply overall treatment only where attached concrete platform and porches are on fill or ground.

G. Penetrations: At expansion joints, control joints, and area where slabs will be penetrated.

H. Avoid disturbance of treated soil after application. Keep off treated areas until completely dry.

I. Protect termiticide solution, dispersed in treated soils and fills, from being diluted until ground-supported slabs are installed. Use waterproof barrier according to EPA-Registered Label instructions.

J. Post warning signs in areas of application.

K. Reapply soil treatment solution to areas disturbed by subsequent excavation, grading, landscaping, or other construction activities following application.

END OF SECTION

SECTION 31 2300

EXCAVATION AND FILL

PART 1 GENERAL

1.01 RELATED DOCUMENTS

A. Drawings and general provisions of the Contract, including General and Supplementary Conditions and Division 01 Specification Sections, apply to this Section.

1.02 SUMMARY

A. The work under this section of the Specifications includes all labor, materials, equipment, and services necessary for EXCAVATION AND FILL as shown on the Drawings and herein specified and in accordance with the Contract Documents. All costs for labor, materials, equipment, and services necessary for EXCAVATION AND FILL shall be included in the bid prices for the work.

1.03 SECTION INCLUDES

A. Subgrade Preparation
B. Excavation
    1. Trenching
C. Dewatering
D. Fill
    1. Backfill
    2. Compaction

1.04 RELATED SECTIONS

A. 31 1000 Site Clearing
B. 31 2200 Grading
C. 31 2500 Erosion and Sedimentation Controls
D. 32 1100 Base Courses

1.05 DEFINITIONS

A. AHJ – Authority Having Jurisdiction
    1. City of Tahlequah
    2. United States Environmental Protection Agency
B. Backfill - Soil material or controlled low-strength material used to fill an excavation.
C. Initial Backfill - Backfill placed beside and over pipe in a trench, including haunches to support sides of pipe.
D. Final Backfill - Backfill placed over initial backfill to fill a trench.
E. Borrow - Borrow shall consist of required excavation, removal, and proper utilization of materials obtained from designated or approved sources for use as fill or backfill.
F. Excavation - Removal of material encountered above subgrade elevations and to lines and dimensions indicated.
    1. Authorized Additional Excavation - Excavation below subgrade elevations or beyond indicated lines and dimensions as directed by Architect. Authorized additional excavation and replacement material will be paid for according to Contract provisions for changes in the Work.
    2. Unauthorized Excavation - Excavation below subgrade elevations or beyond indicated lines and dimensions without direction by Architect. Unauthorized

excavation, as well as remedial work directed by Architect, shall be without additional compensation.

G. Embankment - The placement and compaction of all suitable materials obtained from excavation or borrow to raise existing grades.

H. Structures - Buildings, footings, foundations, retaining walls, slabs, tanks, curbs, mechanical and electrical appurtenances, or other man-made stationary features constructed above or below the ground surface.

I. Subgrade - Uppermost surface of an excavation or the top surface of a fill or backfill immediately below subbase, drainage fill, drainage course, or topsoil materials.

J. Utilities - On-site underground pipes, conduits, ducts, and cables, as well as underground services within buildings.

K. Rock - Rock material in beds, ledges, unstratified masses, conglomerate deposits, and boulders of rock material that exceed 1 cu. yd. (0.76 cu. m) for bulk excavation or 3/4 cu. yd. (0.57 cu. m) for footing, trench, and pit excavation that cannot be removed by rock excavating equipment equivalent to the following in size and performance ratings, without systematic drilling, ram hammering, or ripping.

1. For classifying rock excavation in bulk or mass excavations, use a late model, well-maintained tractor-mounted hydraulic ripper equipped with one digging point of standard manufacturer's design sized for use with, and propelled by, a crawler-type tractor with a minimum net flywheel power rating of 370 hp (276 kW), operating in low gear.
2. For classifying rock excavation in footing, trench, and pit excavations, use a late model, well-maintained, track-mounted hydraulic excavator; equipped with a 42-inch wide, maximum, short-tip-radius rock bucket; rated at not less than 138-hp flywheel power with bucket-curling force of not less than 28,700 lbf and stick-crowd force of not less than 18,400 lbf with extra-long reach boom; measured according to SAE J-1179.

1.06 ACTION SUBMITTALS

A. For each type of the following manufactured products:

1. Geotextiles
2. Warning tapes

1.07 INFORMATIONAL SUBMITTALS

A. Photograph, video, or both the existing trees and plantings, adjoining construction, roadways, utilities, and site improvements to establish preconstruction conditions. Identify preexisting damage to trees, plantings, adjoining construction, pavements, sidewalks, and other site improvements. Include plans and notations to identify and describe any such conditions.

B. Material Test Reports: For each borrow material proposed for fill and backfill as follows:

1. Source of borrow material.
2. Classification according to ASTM D-2487.
3. Laboratory Compaction curve according to ASTM D-698.

1.08 DELIVERY, STORAGE, AND HANDLING

A. See Execution.

1.09 QUALITY ASSURANCE

A. PRECONSTRUCTION CONFERENCE

1. Conduct a preconstruction conference. Subcontractors that will be performing the work shall attend the preconstruction conference. Notify ENGINEER one week (7 days) prior to the date of the meeting.

B. REGULATORY REQUIREMENTS

1. All materials and methods shall comply with the requirements of the AHJ.

1.10 PERMITS

A. CONTRACTOR shall make application; pay permit fees; provide payment and performance bonds required of the CONTRACTOR by the AHJ.

1.11 TOPOGRAPHIC SURVEY

A. OWNER has or will perform a survey of the site, stake the property limits, and provide a reference benchmark elevation.

1.12 UNDERGROUND UTILITIES

A. CONTRACTOR shall contact OKIE (811 or 1-800-522-OKIE) prior to construction for locating existing utilities.

B. The underground utilities shown on the Drawings have been located from field survey surface information and existing drawings. ENGINEER and Surveyor make no guarantee that the underground utilities shown comprise all such utilities in the area, either in service or abandoned. The underground utilities are located as accurately as possible from information available; however, ENGINEER and Surveyor further do not guarantee that the underground utilities shown are in the exact location indicated either vertically or horizontally. ENGINEER and Surveyor have not physically located the underground utilities by probing, excavating, hydrovac, or by any other means.

C. CONTRACTOR shall notify all utility companies and governmental agencies who may have utility lines on or about the premises or who may be affected by the construction. Notice shall be given no less than twenty-four hours prior to any work that may interfere with a utility.

D. All existing structures, improvement and utilities designated to remain shall be adequately protected from damage that might otherwise occur due to construction operations. Where construction comes in close proximity to existing structures, utilities or appurtenances, or if it becomes necessary to move services, poles, guy wires, pipe lines or other obstructions, CONTRACTOR shall notify and cooperate with the owner of the utility, structure, or appurtenance. The utility lines and other existing structures shown on the plans are for information only and are not guaranteed to be complete or accurate as to location, depth, or both. CONTRACTOR shall be liable for damage to any utilities resulting from the CONTRACTOR's operations. During construction, all fire hydrants, valve boxes, fire or police call boxes and other existing utility controls shall be left intact, unobstructed and accessible unless noted on the plan.

E. Contractor shall satisfy themselves as to the actual existing subsurface conditions, including but not limited to the depth, location and sizes of pipe or conduits of various kinds in place prior to beginning work. Where the exact depth of any utility or obstruction is not shown on a plan, excavation shall be made prior to reaching the obstruction in order to determine adjustments in grade if needed to prevent interference. Redesign to eliminate conflicts may be necessary.

1.13 CONSTRUCTION CONTROL

A. Do not commence work until temporary erosion and sedimentation control measures are in place.

B. CONTRACTOR shall be responsible for properly laying out the work, and for lines and measurements for the work executed under the Contract Documents. Verify the figures

shown on the Drawings before ordering any materials and laying out the work, and report errors or inaccuracies in writing to the ENGINEER before commencing work. The ENGINEER or his representative will in no case assume the responsibility for laying out the work.

C. Existing survey points other than those shown on the Drawings shall not be considered as acceptable control points unless approved by the ENGINEER. If approval is secured, CONTRACTOR remains responsible for maintaining them and for their accuracy. Be responsible for preserving all existing iron or metal, and all concrete survey points or monuments for the construction period.

1.14 PROJECT CONDTIONS

A. TRAFFIC

1. Obtain any required Work Zone Permits from the AHJ at least two (2) working days prior to the start of work and/or placing or removing any barricades or modifying existing traffic control devices.
2. CONTRACTOR shall be responsible for erecting and maintaining barricades and other traffic warning devices as necessary around the perimeter of construction and adjacent to any open trenches. Provide and maintain adequate detours around the work under construction. Provide sufficient lights, warning signs, and watchmen for the safety of the public.
3. Any temporary street closure shall be coordinated with and approved by the AHJ. CONTRACTOR shall establish all detour routes while streets are closed during construction. CONTRACTOR shall notify Fire, Police, and EMSA headquarters when any street is temporarily closed.
4. CONTRACTOR is responsible for the prompt replacement and/or repair of all traffic control devices and appurtenances damaged or disturbed due to construction. Any existing traffic signals, signal loops, conduits, cables, and other traffic control devices affected by the work shall be reset or replaced according to AHJ's specifications. Coordinate the work with the AHJ's traffic department.

B. UTILITY INTERRUPTIONS

1. Do not interrupt any utility serving facilities occupied by Owner or others unless permitted by OWNER and the owner(s) of the utility. Temporary utility service shall be provided for any interruption. Notify OWNER and ENGINEER one week (7 days) in advance of proposed interruption of utility.

C. SUBSURFACE CONDITIONS

1. A geotechnical report has been prepared for this Project and is available for information only. The opinions expressed in this report are those of geotechnical engineer and represent interpretations of subsoil conditions, tests, and results of analyses conducted by geotechnical engineer. Owner will not be responsible for interpretations or conclusions drawn from the data.

D. EXCAVATION AND TRENCH SAFETY SYSTEMS

1. CONTRACTOR shall be responsible for complying with State laws and Federal regulations relating to excavation and trench safety, including those which may be enacted during the performance under this Contract. CONTRACTOR is advised that Federal Regulations 29 C.F.R. 1926.650-1926.652 have been, in their most recent version as amended, in effect since January 2, 1990. CONTRACTOR shall fully comply with the U.S. Department of Labor Occupational Safety and Health Administration (OSHA) regulations pertaining to excavations, trenching, and shoring and shall provide and familiarize its employees involved

in excavation and trenching with the provisions in OSHA Pamphlet Number 2226, Excavating and Trenching Operations.

1.15 HAZARDOUS CONDITIONS

A. If CONTRACTOR encounters a Hazardous Environmental Condition or if CONTRACTOR or anyone for whom CONTRACTOR is responsible creates a Hazardous Environmental Condition, CONTRACTOR shall immediately: (i) secure or otherwise isolate such condition; (ii) stop all Work in connection with such condition and in any area affected thereby (except in an emergency); and (iii) notify OWNER and ENGINEER (and promptly thereafter confirm such notice in writing). OWNER shall promptly consult with ENGINEER concerning the necessity for OWNER to retain a qualified expert to evaluate such condition or take corrective action, if any.

PART 2 PRODUCTS

2.01 EQUIPMENT

A. Excavating and grading equipment shall be approved types and designs, and shall be maintained in first class condition. Equipment used for disposing of excavated materials outside of the limits of the work shall be such as will avoid scattering or wasting material along the line of haul.

2.02 MATERIALS

A. Provide borrow materials when sufficient satisfactory soil materials are not available from excavations.

B. Satisfactory Soils

1. Controlled, compacted fill shall consist of approve materials that are free of organic matter and debris and contain maximum rock size of 12 inches, or the lift thickness, whichever is less. Frozen material shall not be used, and fill shall not be placed on a frozen subgrade. A sample of each material type shall be submitted to the Geotechnical Engineer for evaluation prior to its use.
2. On-Site Soils / Imported Fill
    a. USCS Classification Groups: Gravelly CL, or CL-CH, GC, SC, SW, or GW
    b. These soils are acceptable for placement at all locations and elevations.
3. Low Volume Change (LVC) Engineered Fill
    a. USCS Classification Groups: Gravelly CL, GC, or SC with a liquid limit less than 50.
    b. Low plasticity cohesive soil or granular soil shall have a liquid limit of less than 50%, contain at least 15% fines retained on the No. 200 sieve, and be preapproved by the Geotechnical Engineer for evaluation prior to its use.
    c. LVC soils are acceptable for placement within 2 ft below the bottom of the slab elevation.
    d. On-site soils classified as CL, SC or GC segregated during earthwork may be used as LVC material.
    e. Topsoil strippings or material containing organics shall not be used as LVC material.
4. On-Site Natural Soils
    a. USCS Classification: CH
        1) These soils shall not be placed within the upper 2 ft beneath foundations, floor slabs and pavements.
    b. CH Clays with Liquid Limit equal to or above 50 are considered suitable for use as controlled fill only if the percentage of rock fragments

exceeds 35% or if placed 2 ft below shallow foundations, slab, or pavement areas.

C. Unsatisfactory Soils: Soil Classification Groups OL, CH, MH, OH, and PT according to ASTM D 2487, or a combination of these groups; rock or gravel larger than 12 inches in any dimension, debris, waste, frozen materials, vegetation, and other deleterious matter.

1. Unsatisfactory soils also include satisfactory soils not maintained within the required optimum moisture content at the time of compaction.

D. Engineered Fill shall be Low Volume Change Engineered Fill.

E. Bedding Course: Naturally or artificially graded mixture of natural or crushed gravel, crushed stone, and natural or crushed sand; ASTM D 2940; except with 100 percent passing a 1-inch sieve and not more than 8 percent passing a No. 200 sieve.

F. Drainage Course: Narrowly graded mixture of washed crushed stone, or crushed or uncrushed gravel; ASTM D 448; coarse-aggregate grading Size 57; with 100 percent passing a 1-1/2-inch sieve and 0 to 5 percent passing a No. 8 sieve.

G. Filter Material: Narrowly graded mixture of natural or crushed gravel, or crushed stone and natural sand; ASTM D 448; coarse-aggregate grading Size 67; with 100 percent passing a 1-inch sieve and 0 to 5 percent passing a No. 4 sieve.

H. Sand: ASTM C 33; fine aggregate.

I. Impervious Fill: Clayey gravel and sand mixture capable of compacting to a dense state.

2.03 GEOTEXTILES

A. Geotextiles for Erosion Control

1. Pervious fabric under riprap for slope protection and gabion separation shall meet the requirements of AASHTO M 288, “Permanent Erosion Control Geotextile Requirements.”

B. Geotextiles for Subsurface Drainage Purposes

1. Geotextiles for pipe underdrain and drainage systems shall meet the requirements of AASHTO M 288, “Subsurface Drainage Geotextile Requirements.” Geotextile shall be according to AASHTO M 288, Table 2, with from 15 to 50 percent of in-situ soil passing the No. 200 sieve.

C. Geotextiles for Subgrade Reinforcement

1. Geotextiles for subgrade reinforcement under pavement structures shall meet the requirements of AASHTO M 288, “Stabilization Geotextile Property Requirements.”

D. Geotextiles for Bases

1. Geotextiles used for separation under base courses shall be a non-woven fabric for base course separation in accordance with AASHTO M 288, “Separation Geotextile Property Requirements” with a Class 2 Degree of Survivability.

2.04 CONTROLLED LOW-STRENGTH MATERIAL

A. Controlled Low-Strength Material (CLSM) shall be a self-compacting low strength material with a flowable consistency.

B. CLSM shall be produced from the following materials:

1. Portland Cement: ASTM C 150, Type I.
2. Fly Ash: ASTM C 618, Class C or F.
3. Normal-Weight Aggregate: ASTM C 33, 3/8-inch nominal maximum aggregate size.
4. Foaming Agent: ASTM C 869.

5. Water: ASTM C 94.
6. Air-Entraining Admixture: ASTM C 260.

C. CLSM shall meet the following requirements:

1. Spread diameter of 8 inches or greater according to ASTM D 6103.
2. Minimum strength of 300 psi according to ASTM D 4832 at 28 days after placement.
3. Unit weight of 115 to 145 lb/cu.ft measured at the point of placement according to ASTM D 6023.

2.05 ACCESSORIES

A. Detectable Warning Tape: Acid- and alkali-resistant, polyethylene film warning tape manufactured for marking and identifying underground utilities, a minimum of 6 inches wide and 4 mils thick, continuously inscribed with a description of the utility, with metallic core encased in a protective jacket for corrosion protection, detectable by metal detector when tape is buried up to 30 inches deep; colored as follows:

1. Red: Electric.
2. Yellow: Gas, oil, steam, and dangerous materials.
3. Orange: Telephone and other communications.
4. Blue: Water systems.
5. Green: Sewer systems.

PART 3 EXECUTION

3.01 PREPARATION

A. Protect structures, utilities, sidewalks, pavements, and other facilities from damage caused by settlement, lateral movement, undermining, washout, and other hazards created by earth moving operations.
B. Protect and maintain erosion and sedimentation controls during earth moving operations.
C. Protect subgrades and foundation soils from freezing temperatures and frost. Remove temporary protection before placing subsequent materials.

3.02 EXPLOSIVES

A. Do not use explosives.

3.03 EXCAVATION, GENERAL

A. Classified Excavation: Excavate to subgrade elevations. Material to be excavated will be classified as earth and rock. Do not excavate rock until it has been classified and cross sectioned by Engineer.

1. Earth excavation includes excavating pavements and obstructions visible on surface; underground structures, utilities, and other items indicated to be removed; together with soil, boulders, and other materials not classified as rock or unauthorized excavation.
    a. Intermittent drilling; ram hammering; or ripping of material not classified as rock excavation is earth excavation.
2. Rock excavation includes removal and disposal of rock. Remove rock to lines and subgrade elevations indicated to permit installation of permanent construction without exceeding the following dimensions:
    a. 24 inches outside of concrete forms other than at footings.
    b. 12 inches outside of concrete forms at footings.
    c. 6 inches outside of minimum required dimensions of concrete cast against grade.

d. Outside dimensions of concrete walls indicated to be cast against rock without forms or exterior waterproofing treatments.
e. 6 inches beneath bottom of concrete slabs-on-grade.
f. 6 inches beneath pipe in trenches, and the greater of 24 inches wider than pipe or 42 inches wide.

3. All existing fill material shall be removed and properly replaced according to these specifications.

B. Construction Methods

1. All excavation shall be in accordance with the lines, grades and typical sections as shown on the plans or as established by the OWNER. Unless otherwise shown on the plans or established by the OWNER, the excavation shall be made to the subgrade. Where excavation to grades established in the field by the OWNER would terminate in unstable soil, the CONTRACTOR shall remove the unstable soil and backfill to the required grade.
2. The on-site soils typically classify as Type B in accordance with OSHA regulations. Temporary excavations classifying as Type B with a total height of less than 20 ft shall be cut no steeper than 1H:1V in accordance with OSHA guidelines.
3. Where excavation to grade established in the field by the OWNER terminates in loose or solid rock, the CONTRACTOR shall extend the depth of excavation 6 inches and backfill with select material compacted as required.
4. The CONTRACTOR shall conduct his operation in such a manner that adequate measurements may be taken before any backfill, as required above, is placed.

C. Provisions for Drainage

1. If it is necessary in the execution of the work to interrupt the natural drainage of the surface or the flow of artificial drains, the CONTRACTOR shall provide temporary drainage facilities that shall prevent damage to public or private interest and shall restore the original drains as soon as the work shall permit.
2. The CONTRACTOR shall be held liable for all damages which may result from neglecting to provide for either natural or artificial drainage which his work may have interrupted.

D. Excess Excavation

1. Excavation in excess of that needed for construction shall be disposed of by the CONTRACTOR. In general, suitable excess excavation shall be used in construction of streets, drives, parking lots, widening of embankments, flattening of slopes, etc., but, if it becomes necessary to waste any material, it shall be disposed of in such a manner as to present a neat appearance and to not obstruct proper drainage or cause injury to any street improvements or abutting property. If necessary to haul off excess or unsuitable material, the CONTRACTOR should ask approval of the OWNER as to disposition site and method.

3.04 EXCAVATION FOR STRUCTURES

A. Excavate to indicated elevations and dimensions within a tolerance of plus or minus 1 inch. If applicable, extend excavations a sufficient distance from structures for placing and removing concrete formwork, for installing services and other construction, and for inspections.

1. Excavations for Footings and Foundations: Do not disturb bottom of excavation. Excavate by hand to final grade just before placing concrete reinforcement. Trim bottoms to required lines and grades to leave solid base to receive other work.

2. Pile Foundations: Stop excavations 6 to 12 inches above bottom of pile cap before piles are placed. After piles have been driven, remove loose and displaced material. Excavate to final grade, leaving solid base to receive concrete pile caps.
3. Excavation for Underground Tanks, Basins, and Mechanical or Electrical Utility Structures: Excavate to elevations and dimensions indicated within a tolerance of plus or minus 1 inch. Do not disturb bottom of excavations intended as bearing surfaces.

B. All existing fill material shall be removed and properly replaced according to these specifications.

C. If relatively chert free fat clay zones are encountered at footing bottom and finish subgrade elevation, they should be undercut 2 ft, or to gravelly clays/clayey gravels, whichever is shallower, and replaced with LVC fill material.

3.05 EXCAVATION FOR WALKS AND PAVEMENTS

A. Excavate surfaces under walks and pavements to indicated lines, cross sections, elevations, and subgrades.

3.06 EXCAVATION FOR UTILITY TRENCHES

A. The length of trench excavated approximately to grade shall not exceed one hundred-fifty feet (150') and no trench excavation whatsoever shall be made farther than three hundred feet (300') in advance of completed backfill.

B. Trenches shall be excavated to a width which will provide adequate working space and sidewall clearances for proper pipe installation, joining, and embedment. Stipulated minimum trench widths are not minimum average widths, but are minimum widths that shall be required. Stipulated maximum trench widths shall not be exceeded. Trench width shall be the width of the trench excavation measured from bank to bank at the top of the pipe. For rigid pipes, when the maximum trench width is exceeded, the Contractor shall be required to provide a higher strength pipe or higher bedding classification, singly or in combination as directed by the Engineer, at the Contractor's expense. Any additional foundation material and/or embedment material required due to over excavation, beyond the maximum trench width shall be at the Contractor's expense.

C. Where trenches are excavated in soil of such nature as to require sheeting and shoring to assure proper installation, and safety of the workmen and any adjacent structures or other objects, the Contractor shall provide the necessary sheeting and shoring. Where possible, shields designed to be portable and moved along as work progresses may be used. The contract pay widths shown in the above shall apply to all trenches with or without sheeting or shoring.

D. Excavation shall be made in open-cut from the surface of the ground and shall be made no larger than necessary to permit proper construction of the work in accordance with the plans and specifications. The entire foundation area in the bottom of all excavations shall be firm, stable and of uniform density as nearly as practical, and unless necessary, materials shall not be disturbed below grade. Where trenches are excavated in soft, unsuitable materials, trench bottom may be stabilized by over-excavating unsuitable materials and replaced with engineered fill.

E. Where depth of trenching and other excavations are greater than twenty feet (20’), and when not provided for in the plans, an engineer shall be retained by the Contractor to design bank protection as per OSHA rules and regulations. The bank protection design, signed and sealed by a Professional Engineer registered in the State of Oklahoma, shall be submitted to the Engineer.

F. The sides of all excavations shall be sufficiently sheeted, shored and braced so as to prevent slides, cave-ins, settlement or movement of the banks. In wet, saturated or

flowing ground where it is necessary to install tight sheeting or cofferdams, wood or steel sheet piling of approved design and type shall be used. All sheeting, shoring and bracing shall have sufficient strength and rigidity to withstand the pressures exerted and maintain the walls of the excavation properly in place and protect all persons or property from injury or damage. When excavations are made adjacent to existing buildings or other structures, or in paved streets or alleys, particular care shall be taken to adequately sheet, shore, and brace the sides of the excavation to prevent any undermining of or settlement beneath the structures or the pavement. Underpinning of adjacent structures, when necessary, shall be done in an approved manner. The foundation material that is undermined shall be replaced and compacted in accordance with the requirements of this section. Sheeting, shoring, and bracing shall not be left in place unless otherwise shown on the plans or authorized by the Engineer. The removal of sheeting, shoring and bracing shall be done in such a manner as not to endanger or damage either the new structure or any existing structure or property, either private or public, and so as to avoid cave-ins or sliding of the banks. If for any reason the Contractor, with the approval of the Engineer, leaves in place any sheeting, shoring or bracing, no payment will be allowed for such material left in place unless it is classified as a contract pay item. All holes or voids left by the removal of sheeting, shoring or bracing shall be satisfactorily filled and compacted in accordance with the requirements of this section.

3.07 SUBGRADE PREPARATION AND INSPECTION

A. Notify Architect when excavations have reached required subgrade.

B. If unsatisfactory soil is present, continue excavation and replace with compacted backfill or fill material as directed.

C. Areas to receive controlled fill, building subgrades, pavement subgrades, and undercut bottoms shall be proof-rolled with a fully loaded tandem axle dump truck or similar heavy rubber-tired construction equipment. All soft subgrade areas shall be undercut and replaced with compacted fill.

D. Proof-roll subgrade below the building slabs and pavements with a pneumatic-tired and loaded 10-wheel, tandem-axle dump truck weighing not less than 25 tons to identify soft pockets and areas of excess yielding. Do not proof-roll wet or saturated subgrades.

1. Completely proof-roll subgrade in one direction, repeating proof-rolling in direction perpendicular to first direction. Limit vehicle speed to 3 mph.
2. Excavate soft spots, unsatisfactory soils, and areas of excessive pumping or rutting, as determined by Architect, and replace with compacted backfill or fill as directed.

E. After proof-rolling, scarify exposed subgrade to a minimum depth of 8 inches and compact to a least 95 percent of its maximum dry density as determined by the ASTM D-698 at a moisture content of optimum or above.

F. Reconstruct subgrades damaged by freezing temperatures, frost, rain, accumulated water, or construction activities, as directed by Architect, without additional compensation.

3.08 GROUND PENETRATING RADAR

A. Once final excavation within the building footprint is achieved, the subsurface area within the footprint shall be inspected with ground penetrating radar (GPR) to potentially locate large shallow subsurface voids, if present.

3.09 STORAGE OF SOIL MATERIALS

A. Stockpile borrow soil materials and excavated satisfactory soil materials without intermixing. Place, grade, and shape stockpiles to drain surface water. Cover to prevent windblown dust.

B. Stockpile soil materials away from edge of excavations. Do not store within drip line of remaining trees.

3.10 FILL

A. Prior to the placing of any fill, all clearing and grubbing and site preparation shall have been completed. Stump holes or other small excavations within the limits of the embankment shall have been backfilled before commencing the embankment construction. The surface of the ground, including plowed or loosened ground or small ditches or washes, shall be restored to approximately its original slope.

B. Embankments shall be constructed to the established grade and to the shape of the typical section shown on the, plans, and each section shall conform to the detailed sections of slopes. After completion of the embankment, it shall be continuously maintained to its finished section and grade until the project is accepted.

C. Earth embankments shall be constructed in successive horizontal layers, for the full width of specified depth or cross sections; and in such lengths as are suitable for the sprinkling and compaction methods to be used. Each layer of earth embankment shall be uniform as to material, density, and moisture content before beginning compaction. Layers of embankment shall be brought up uniformly on each side of the structure, and special care shall be taken to prevent any wedging action against the structure. For such distances along embankments adjacent to structures where it is impracticable to obtain compaction by rolling, the embankment material shall be placed in layers not exceeding 6 inches in depth of loose material wetted uniformly to the moisture content directed; and shall then be compacted by methods approved by the OWNER, maintaining the required moisture content by additional sprinkling, if necessary, supplemented by such hand work as is necessary to secure a uniform and thoroughly compacted fill, until each layer has been uniformly compacted to the satisfaction of OWNER.

D. Place backfill on subgrades free of mud, frost, snow, or ice.

3.11 TRENCH BACKFILL

A. Backfill is that portion of the total trench backfill down to but not including the pipe embedment material. The backfill shall be only material approved by the Engineer consisting of loose earth, free of clods, stones, organic matter, debris or other objectionable materials.

B. All backfilling shall be done in such a manner as not to disturb or injure the pipe or structures over or against which it is being placed. Any pipe or structure injured, damaged or moved from its proper line or grade during backfilling operations shall be opened up and repaired and then re-backfilled as herein specified.

C. The top surface or slopes of all backfill shall be neatly graded off where select topsoil, sod or other material is removed and piled separately; such material shall be carefully replaced in a manner satisfactory to the Engineer. The top twelve inches (12”) of backfill material shall be of as good quality as the original topsoil that was removed.

D. A clay trench plug shall be constructed at the edge of the building and extend at least 5 feet out from the face. The clay shall have a minimum plasticity index (PI) of 15 and be placed in controlled lifts not exceeding 9 inches in loose thickness. Each lift of clay backfill shall be compacted to at least 95 percent of the material’s maximum standard Proctor dry density, ASTM 698, at a minimum moisture content that is above its optimum value.

E. Place trench backfill on subgrades free of mud, frost, snow, or ice.

F. Place trench backfill and fill soil materials in layers not more than 6 inches in loose depth.

G. Place and compact bedding course on trench bottoms and where indicated. Shape bedding course to provide continuous support for bells, joints, and barrels of pipes and for joints, fittings, and bodies of conduits.

H. Backfill voids with satisfactory soil while removing shoring and bracing.

I. Place and compact initial backfill, free of particles larger than 1 inch in any dimension, to a height of 12 inches over the pipe or conduit.

J. Carefully compact initial backfill under pipe haunches and compact evenly up on both sides and along the full length of piping or conduit to avoid damage or displacement of piping or conduit. Coordinate backfilling with utilities testing.

K. Install warning tape directly above utilities, 12 inches below finished grade, except 6 inches below subgrade under pavements and slabs.

3.12 SOIL MOISTURE CONTROL

A. Uniformly moisten or aerate subgrade and each subsequent fill or backfill soil layer before compaction to within 2 percent of optimum moisture content for CL, ML, SC, GC, GW &SW Soil Types; and between 0 and 4% above optimum for CH soil types.

B. Do not place backfill or fill soil material on surfaces that are muddy, frozen, or contain frost or ice.

C. Remove and replace, or scarify and air dry, otherwise satisfactory soil material that exceeds optimum moisture content by 2 percent and is too wet to compact to specified dry unit weight.

3.13 COMPACTION OF SOIL BACKFILLS AND FILLS

A. Place backfill and fill soil materials in layers not more than 12 inches in loose depth for material compacted by heavy compaction equipment, and not more than 4 inches in loose depth for material compacted by hand-operated tampers.

B. Place backfill and fill soil materials evenly on all sides of structures to required elevations, and uniformly along the full length of each structure.

C. Compact backfills and fills to not less than the following percentages of maximum dry unit weight according to ASTM D-698:

1. Fill shall be compacted with six (6) passes (3 each direction) minimum using a self-propelled vibratory compactor with a minimum drum diameter of 48-inches for granular soils, or 95% Standard Proctor Density (ASTM D698) for materials containing sufficient fines content.
2. Pavements, sidewalks and exterior slabs shall be compacted to 95% Standard Proctor Density.
3. Non-structural areas shall be compacted to 90% Standard Proctor Density.
4. For utility trenches, compact each layer of initial and final backfill soil material at 95 percent.

3.14 SUBBASE AND BASE COURSES UNDER PAVEMENTS AND WALKS

A. Place subbase course and base course on subgrades free of mud, frost, snow, or ice.

B. On prepared subgrade, place subbase course and base course under pavements and walks as follows:

1. Place base course material over subbase course under hot-mix asphalt pavement.
2. Shape subbase course and base course to required crown elevations and cross-slope grades.
3. Place subbase course and base course 6 inches or less in compacted thickness in a single layer.
4. Place subbase course and base course that exceeds 6 inches in compacted thickness in layers of equal thickness, with no compacted layer more than 6 inches thick or less than 3 inches thick.
5. Compact subbase course and base course at optimum moisture content to required grades, lines, cross sections, and thickness to not less than 100 percent of Standard Proctor Compaction according to ASTM D-698.

C. Pavement Shoulders: Place shoulders along edges of subbase course and base course to prevent lateral movement. Construct shoulders, at least 12 inches wide, of satisfactory soil materials and compact simultaneously with each subbase and base layer to not less than 100 percent of Standard Proctor Compaction according to ASTM D-698.

3.15 PROTECTION

A. Protect newly graded areas from traffic, freezing, and erosion. Keep free of trash and debris.

B. Repair and reestablish grades to the specified tolerances where completed or partially completed surfaces become eroded, rutted, settled, or where they lose compaction due to subsequent construction operations or weather conditions.

1. Scarify or remove and replace soil material to depth as directed by Architect; reshape and recompact.

C. Where settling occurs before Project correction period elapses, remove finished surfacing, backfill with additional soil material, compact, and reconstruct surfacing.

1. Restore appearance, quality, and condition of finished surfacing to match adjacent work, and eliminate evidence of restoration to greatest extent possible.

3.16 DISPOSAL OF SURPLUS AND WASTE MATERIALS

A. Remove surplus satisfactory soil and waste materials, including unsatisfactory soil, trash, and debris, and legally dispose of them off Owner's property.

B. Transport surplus satisfactory soil to designated storage areas on Owner's property. Stockpile or spread soil as directed by Architect.

C. Remove waste materials, including unsatisfactory soil, trash, and debris, and legally dispose of them off Owner's property.

3.17 DEWATERING

A. PERFORMANCE

1. Design, furnish, install, test, operate, monitor, and maintain dewatering system of sufficient scope, size, and capacity to control hydrostatic pressures and to lower, control, remove, and dispose of ground water and permit excavation and construction to proceed on dry, stable subgrades.
2. Continuously monitor and maintain dewatering operations to ensure erosion control, stability of excavations and constructed slopes, that excavation does not flood, and that damage to subgrades and permanent structures is prevented.
3. Prevent surface water from entering excavations by grading, dikes, or other means.
4. Accomplish dewatering without damaging existing buildings, structures, and site improvements adjacent to excavation.
5. Remove dewatering system when no longer required for construction.

B. PREPARATION

1. Protect structures, utilities, sidewalks, pavements, and other facilities from damage caused by settlement, lateral movement, undermining, washout, and other hazards created by dewatering operations.
2. Prevent surface water and subsurface or ground water from entering excavations, from ponding on prepared subgrades, and from flooding site and surrounding area.
3. Protect subgrades and foundation soils from softening and damage by rain or water accumulation.

4. Install dewatering system to ensure minimum interference with roads, streets, walks, and other adjacent occupied and used facilities.
5. Do not close or obstruct streets, walks, or other adjacent occupied or used facilities without permission from Owner and authorities having jurisdiction. Provide alternate routes around closed or obstructed traffic ways if required by authorities having jurisdiction.
6. Provide temporary grading to facilitate dewatering and control of surface water.
7. Monitor dewatering systems continuously.
8. Promptly repair damages to adjacent facilities caused by dewatering.
9. Protect and maintain temporary erosion and sedimentation controls during dewatering operations.

C. INSTALLATION

1. Install dewatering system utilizing wells, well points, or similar methods complete with pump equipment, standby power and pumps, filter material gradation, valves, appurtenances, water disposal, and surface-water controls.
2. Space well points or wells at intervals required to provide sufficient dewatering.
3. Use filters or other means to prevent pumping of fine sands or silts from the subsurface.
4. Before excavating below ground-water level, place system into operation to lower water to specified levels. Operate system continuously until drains, sewers, and structures have been constructed and fill materials have been placed or until dewatering is no longer required.
5. Provide an adequate system to lower and control ground water to permit excavation, construction of structures, and placement of fill materials on dry subgrades. Install sufficient dewatering equipment to drain water-bearing strata above and below bottom of foundations, drains, sewers, and other excavations.
6. Do not permit open-sump pumping that leads to loss of fines, soil piping, subgrade softening, and slope instability.
7. Reduce hydrostatic head in water-bearing strata below subgrade elevations of foundations, drains, sewers, and other excavations.
8. Maintain piezometric water level a minimum of 60 inches below surface of excavation.
9. Dispose of water removed by dewatering in a manner that avoids endangering public health, property, and portions of work under construction or completed. Dispose of water and sediment in a manner that avoids inconvenience to others. Provide sumps, sedimentation tanks, and other flow-control devices as required by authorities having jurisdiction.
10. Provide standby equipment on site, installed and available for immediate operation, to maintain dewatering on continuous basis if any part of system becomes inadequate or fails. If dewatering requirements are not satisfied due to inadequacy or failure of dewatering system, restore damaged structures and foundation soils at no additional expense to Owner.
11. Remove dewatering system from Project site on completion of dewatering. Plug or fill well holes with sand or cut off and cap wells a minimum of 36 inches below overlying construction.
12. Promptly repair damages to adjacent facilities caused by dewatering operations.

3.18 FIELD QUALITY CONTROL

A. OWNER shall engage a qualified soils testing laboratory. Contractor shall coordinate and order all testing in conjunction with earthwork operations. The results of the tests shall be forwarded to ENGINEER. The soils laboratory shall determine the suitability of existing site material prior to beginning fill operations.

B. The soils testing laboratory shall:

1. Classify excavation material as satisfactory soils or unsatisfactory soils.
2. Determine rock excavation.
3. Determine prior to placement of fill that site has been prepared in compliance with requirements and determine that fill material.
4. Determine that maximum lift thickness comply with requirements.
5. Determine, at the required frequency, that in-place density of compacted fill complies with requirements.

C. Allow testing agency to inspect and test subgrades and each fill or backfill layer. Proceed with subsequent earth moving only after test results for previously completed work comply with requirements.

D. Testing agency shall test compaction of soils in place, as applicable. Tests will be performed at the following locations and frequencies:

1. Building Slab Areas: At subgrade and at each compacted fill and backfill layer, at least one test for every 2,500 sq. ft. or less of building slab area, but in no case fewer than three tests.
2. Paved Areas: At subgrade and at each compacted fill and backfill layer, at least one test for every 5,000 sq. ft. or less of paved area, but in no case fewer than three tests.
3. Foundation Wall Backfill: At each compacted backfill layer, at least one test for every 100 feet or less of wall length, but no fewer than two tests.
4. Trench Backfill: At each compacted initial and final backfill layer, at least one test for every 150 feet or less of trench length, but no fewer than two tests.
5. Non-Structural Areas: One test for every 5,000 sq. ft. or less, but in no case fewer than three tests.

E. When testing agency reports that subgrades, fills, or backfills have not achieved degree of compaction specified, scarify and moisten or aerate, or remove and replace soil materials to depth required; re-compact and retest until specified compaction is obtained.

END OF SECTION 31 2300

SECTION 32 1100

BASE COURSES

PART 1 GENERAL

1.01 RELATED DOCUMENTS

A. Drawings and general provisions of the Contract, including General and Supplementary Conditions and Division 01 Specification Sections, apply to this Section.

1.02 SUMMARY

A. The work under this section of the Specifications includes all labor, materials, equipment, and services necessary for BASE COURSES as shown on the Drawings and herein specified and in accordance with the Contract Documents. All costs for labor, materials, equipment, and services necessary for BASE COURSES shall be included in the bid prices for the work.

1.03 SECTION INCLUDES

A. Subgrade Modification
B. Aggregate Base Course

1.04 RELATED SECTIONS

A. 31 22 00 Grading
B. 31 23 00 Excavation and Fill
C. 31 25 00 Erosion and Sedimentation Controls

1.05 DEFINITIONS

A. AHJ – Authority Having Jurisdiction

1. City of Tahlequah

1.06 ACTION SUBMITTALS

1.07 INFORMATIONAL SUBMITTALS

A. Material Test Reports: For each base course material proposed as follows:

1. Source of base course material.
2. Classification according to ASTM D-2487.
3. Laboratory Compaction curve according to ASTM D-698.

1.08 DELIVERY, STORAGE, AND HANDLING

A. See Execution.

1.09 QUALITY ASSURANCE

A. PRECONSTRUCTION CONFERENCE

1. Conduct a preconstruction conference. Subcontractors that will be performing the work shall attend the preconstruction conference. Notify ENGINEER one week (7 days) prior to the date of the meeting.

B. REGULATORY REQUIREMENTS

1. All materials and methods shall comply with the requirements of the AHJ.

1.10 PERMITS

A. CONTRACTOR shall make application; pay permit fees; provide payment and performance bonds required of the CONTRACTOR by the AHJ.

1.11 TOPOGRAPHIC SURVEY

A. OWNER has or will perform a survey of the site, stake the property limits, and provide a reference benchmark elevation.

1.12 UNDERGROUND UTILITIES

A. CONTRACTOR shall contact OKIE (811 or 1-800-522-OKIE) prior to construction for locating existing utilities.

B. The underground utilities shown on the Drawings have been located from field survey surface information and existing drawings. ENGINEER and Surveyor make no guarantee that the underground utilities shown comprise all such utilities in the area, either in service or abandoned. The underground utilities are located as accurately as possible from information available; however, ENGINEER and Surveyor further do not guarantee that the underground utilities shown are in the exact location indicated either vertically or horizontally. ENGINEER and Surveyor have not physically located the underground utilities by probing, excavating, hydrovac, or by any other means.

C. CONTRACTOR shall notify all utility companies and governmental agencies who may have utility lines on or about the premises or who may be affected by the construction. Notice shall be given no less than twenty-four hours prior to any work that may interfere with a utility.

D. All existing structures, improvement and utilities designated to remain shall be adequately protected from damage that might otherwise occur due to construction operations. Where construction comes in close proximity to existing structures, utilities or appurtenances, or if it becomes necessary to move services, poles, guy wires, pipe lines or other obstructions, CONTRACTOR shall notify and cooperate with the owner of the utility, structure, or appurtenance. The utility lines and other existing structures shown on the plans are for information only and are not guaranteed to be complete or accurate as to location, depth, or both. CONTRACTOR shall be liable for damage to any utilities resulting from the CONTRACTOR's operations. During construction, all fire hydrants, valve boxes, fire or police call boxes and other existing utility controls shall be left intact, unobstructed and accessible unless noted on the plan.

E. Contractor shall satisfy themselves as to the actual existing subsurface conditions, including but not limited to the depth, location and sizes of pipe or conduits of various kinds in place prior to beginning work. Where the exact depth of any utility or obstruction is not shown on a plan, excavation shall be made prior to reaching the obstruction in order to determine adjustments in grade if needed to prevent interference. Redesign to eliminate conflicts may be necessary.

1.13 CONSTRUCTION CONTROL

A. Do not commence work until temporary erosion and sedimentation control measures are in place.

B. CONTRACTOR shall be responsible for properly laying out the work, and for lines and measurements for the work executed under the Contract Documents. Verify the figures shown on the Drawings before ordering any materials and laying out the work, and report errors or inaccuracies in writing to the ENGINEER before commencing work. The ENGINEER or his representative will in no case assume the responsibility for laying out the work.

C. Existing survey points other than those shown on the Drawings shall not be considered as acceptable control points unless approved by the ENGINEER. If approval is secured, CONTRACTOR remains responsible for maintaining them and for their accuracy. Be responsible for preserving all existing iron or metal, and all concrete survey points or monuments for the construction period.

1.14 PROJECT CONDTIONS

PART 2 PRODUCTS

2.01 ADOPTED PRODUCT REQUIRMENTS

A. All materials and products shall comply with the Oklahoma Department of Transportation's 2009 Specifications.

2.02 AGGREGATE BASE FOR VEHICULAR PAVEMENTS

A. General Requirements

1. Provide aggregate base course material consisting of a mixture of coarse and fine graded aggregate that is free of vegetation and other deleterious materials.
2. Coarse aggregate is the material retained on a No. 10 sieve. Provide coarse aggregate consisting of the following durable particles or fragments:
    a. Gravel, Stone, Disintegrated granite, crushed concrete, or
    b. Provide fine aggregate made of sand, stone dust, or other inert, finely-divided mineral.
3. Ensure at least 40% of the completed Type A or Type B mixture retained on the No. 4 sieve contains uniformly graded, mechanically crushed particles with at least one fractured face.
4. Ensure 100 percent of the completed Type C or Type D mixture retained on the No. 4 sieve contains uniformly graded, mechanically crushed particles with at least two fractured faces. Ensure the completed Type C mixture contains no more than 15 percent natural sand.

B. Physical Properties

1. Ensure the coarse aggregate retained on the 3/8 in sieve of the completed mixture has no more than 50 percent wear in accordance with the Los Angeles Abrasion Test in accordance with AASHTO T 96. Ensure the aggregate has an Aggregate Durability Index of at least 40 in accordance with AASHTO T 210.

C. Gradation and Other Requirements

1. Sample the uniform mixture from the project site before compacting. Ensure samples are in accordance with the following Table for Gradation, Plasticity Index, and Liquid Limit for the provided aggregate base types.

Aggregate Base Gradation				
	Percent Passing per Type			
Sieve Size	Type A	Type B	Type C	Type D
3 in	---	100	---	---
2 in	---	---	100	---
1-1/2 in	100	40 -100	90 – 100	100
1 in	---	---	80 – 100	95 – 100
3/4 in	40 – 100	30 – 75	---	---
1/2 in	---	---	60 – 80	25 – 60
3/8 in	30 - 75	25 -60	---	---
No. 4	25 - 60	20 - 50	40 - 60	0 - 10
No. 8	---	---	---	0 – 5
No. 10	20 – 43	15 – 35	25 – 45	---
No. 40	8 – 26	7 – 22	15 – 30	---
No. 200 [a]	40 – 12.0	3.0 – 10.0	0 – 5.0	0 – 2.0

Other Requirements				
Plasticity Index	≤ 6	≤ 6	≤ 6	---
Liquid Limit	≤ 25	≤ 25	≤ 25	---
[a] Ensure the material passing the No. 200 sieve comprises no greater than two-thirds of the quantity of material passing the No. 40 sieve.				
[b] When separate aggregates are blended to produce an aggregate mixture, no individual aggregate shall have a plasticity index higher than 8.				

2.03 SAND BASE FOR SIDEWALKS

A. General Requirements

1. Sand base for sidewalks shall consist of sand, stone, rock, screenings, or select sandy soil free of organic material. Ensure there are no frozen lumps or moisture that may prevent the required compaction.

B. Gradation Requirements

Sand Base Material Gradation	
Sieve Size	Percent Passing
3/8 in	100
No. 200	0 - 10

PART 3 EXECUTION

3.01 ADOPTED PLACEMENT REQUIREMENTS

A. The placement of BASE COURSES shall comply with the Oklahoma Department of Transportation's 2009 Specifications.

3.02 PREPARATION

A. Protect structures, utilities, sidewalks, pavements, and other facilities from damage caused by settlement, lateral movement, undermining, washout, and other hazards created by earth moving operations.

B. Protect and maintain erosion and sedimentation controls during earth moving operations.

C. Protect subgrades and foundation soils from freezing temperatures and frost. Remove temporary protection before placing subsequent materials.

3.03 STORAGE OF MATERIALS

A. Stockpile base course materials without intermixing. Place, grade, and shape stockpiles to drain surface water. Cover to prevent windblown dust.

B. Stockpile base course materials away from edge of excavations. Do not store within drip line of remaining trees.

3.04 SUBGRADE PREPARATION AND INSPECTION

A. Notify Architect when excavations have reached required subgrade.

B. Proof-roll subgrade below the building slabs and pavements with a pneumatic-tired and loaded 10-wheel, tandem-axle dump truck weighing not less than 25 tons to identify soft pockets and areas of excess yielding. Do not proof-roll wet or saturated subgrades.

1. Completely proof-roll subgrade in one direction, repeating proof-rolling in direction perpendicular to first direction. Limit vehicle speed to 3 mph.

2. Excavate soft spots, unsatisfactory soils, and areas of excessive pumping or rutting, as determined by Architect, and replace with compacted backfill or fill as directed.

C. After proof-rolling, scarify exposed subgrade to a minimum depth of 8 inches and compact to a least 95 percent of its maximum dry density as determined by the ASTM D-698 at a moisture content within +/- 2% of optimum.

D. Reconstruct subgrades damaged by freezing temperatures, frost, rain, accumulated water, or construction activities.

3.05 SOIL MOISTURE CONTROL

A. Uniformly moisten or aerate subgrade and each subsequent fill or backfill soil layer before compaction to between +/-2 percent of optimum moisture content.

B. Do not place backfill or fill soil material on surfaces that are muddy, frozen, or contain frost or ice.

C. Remove and replace, or scarify and air dry, otherwise satisfactory soil material that exceeds optimum moisture by +/-2 percent to compact to specified dry unit weight.

3.06 COMPACTION OF SUBGRAGE

A. Compact subgrade to not less than the following percentages of maximum dry unit weight according to ASTM D-698:

1. Under pavements, scarify and recompact top 8 inches of existing subgrade and each layer of backfill or fill soil material at 95 percent.
2. Under walkways, scarify and recompact top 8 inches below subgrade and compact each layer of backfill or fill soil material at 95 percent.

3.07 BASE COURSES UNDER PAVEMENTS AND WALKS

A. Place base course on subgrades free of mud, frost, snow, or ice.

B. On prepared subgrade, place base course under pavements and walks as follows:

1. Install separation geotextile on prepared subgrade according to manufacturer's written instructions, overlapping sides and ends.
2. Place base course material over subbase course under hot-mix asphalt pavement.
3. Shape subbase course and base course to required crown elevations and cross-slope grades.
4. Place base course 6 inches or less in compacted thickness in a single layer.
5. Place base course that exceeds 6 inches in compacted thickness in layers of equal thickness, with no compacted layer more than 6 inches thick or less than 3 inches thick.
6. Compact base course at optimum moisture content to required grades, lines, cross sections, and thickness to not less than 100 percent Standard Proctor Compaction according to ASTM D-698.

C. Pavement Shoulders: Place shoulders along edges of base course to prevent lateral movement. Construct shoulders, at least 12 inches wide, of satisfactory soil materials and compact simultaneously with each subbase and base layer to not less than 100 percent Standard Proctor Compaction according to ASTM D-698.

3.08 DISPOSAL OF SURPLUS AND WASTE MATERIALS

A. Remove surplus base course material and waste materials and legally dispose of them off Owner's property.

3.09 FIELD QUALITY CONTROL

A. CONTRACTOR shall engage a qualified soils testing laboratory. Contractor shall coordinate and order all testing in conjunction with base course placement. The results of the tests shall be forwarded to ENGINEER. The soils laboratory shall determine the suitability of existing site material prior to placement of base courses.

B. The soils testing laboratory shall:

1. Determine prior to placement of fill that site has been prepared in compliance with requirements and determine that fill material.
2. Determine that maximum lift thickness comply with requirements.
3. Determine, at the required frequency, that in-place density of compacted fill complies with requirements.

C. Allow testing agency to inspect and test subgrades and each fill or backfill layer.

D. Testing agency shall test compaction of soils in place and base courses as applicable. Tests will be performed at the following locations and frequencies:

1. Paved Areas: At subgrade and at each compacted fill and backfill layer, at least one test for every 5,000 sq. ft. or less of paved area, but in no case fewer than three tests.

E. When testing agency reports that subgrades or base courses have not achieved degree of compaction specified, scarify and moisten or aerate, or remove and replace materials to depth required; re-compact and retest until specified compaction is obtained.

END OF SECTION 32 1100

SECTION 32 1700

PAVING SPECIALTIES

PART 1 GENERAL

1.01 RELATED DOCUMENTS

A. Drawings and general provisions of the Contract, including General and Supplementary Conditions and Division 01 Specification Sections, apply to this Section.

1.02 SUMMARY

A. The work under this section of the Specifications includes all labor, materials, equipment, and services necessary for PAVING SPECIALTIES as shown on the Drawings and herein specified and in accordance with the Contract Documents. All costs for labor, materials, equipment, and services necessary for PAVING SPECIALTIES shall be included in the bid prices for the work.

1.03 SECTION INCLUDES

A. Parking Bumpers
B. Pavement Markings
C. Preformed Traffic-Calming Devices

1.04 RELATED SECTIONS

A. 32 12 00 Flexible Paving
B. 32 13 00 Rigid Paving
C. 32 13 73 Concrete Paving Joint Sealants
D. 32 16 13 Concrete Curbs and Gutters

1.05 DEFINITIONS

A. AHJ – Authority Having Jurisdiction

1. City of Tahlequah

1.06 ACTION SUBMITTALS

A. Product Data: For each type of product.

1. Include technical data and tested physical and performance properties.

B. Shop Drawings: For Pavement Markings.

1. Indicate Pavement Markings, colors, lane separations, defined parking spaces, and dimensions to adjacent work.
2. Indicate, with international symbol of accessibility, spaces allocated for people with disabilities.

1.07 QUALITY ASSURANCE

A. PRECONSTRUCTION CONFERENCE

1. Conduct a preconstruction conference. Subcontractors that will be performing the work shall attend the preconstruction conference.

B. REGULATORY REQUIREMENTS

1. All materials and methods shall comply with the requirements of the AHJ.
2. If the AHJ has not adopted specifications for materials and methods, the Oklahoma Department of Transportation's 2009 Specifications shall be used.

1.08 CONSTRUCTION CONTROL

A. Do not commence work until temporary erosion and sedimentation control measures are in place.

B. CONTRACTOR shall be responsible for properly laying out the work, and for lines and measurements for the work executed under the Contract Documents. Verify the figures shown on the Drawings before ordering any materials and laying out the work, and report errors or inaccuracies in writing to the ENGINEER before commencing work. The ENGINEER or his representative will in no case assume the responsibility for laying out the work.

C. Existing survey points other than those shown on the Drawings shall not be considered as acceptable control points unless approved by the ENGINEER. If approval is secured, CONTRACTOR remains responsible for maintaining them and for their accuracy. Be responsible for preserving all existing iron or metal, and all concrete survey points or monuments for the construction period.

1.09 PROJECT CONDTIONS

A. TRAFFIC

1. Obtain any Work Zone Permits required from the AHJ at least two (2) working days prior to the start of work and/or placing or removing any barricades or modifying existing traffic control devices.
2. CONTRACTOR shall be responsible for erecting and maintaining barricades and other traffic warning devices as necessary around the perimeter of construction and adjacent to any open trenches. Provide and maintain adequate detours around the work under construction. Provide sufficient lights, warning signs, and watchmen for the safety of the public.
3. Any temporary street closure shall be coordinated with and approved by the AHJ. CONTRACTOR shall establish all detour routes while streets are closed during construction. CONTRACTOR shall notify Fire, Police, and EMSA headquarters when any street is temporarily closed.
4. CONTRACTOR is responsible for the prompt replacement and/or repair of all traffic control devices and appurtenances damaged or disturbed due to construction. Any existing traffic signals, signal loops, conduits, cables, and other traffic control devices affected by the work shall be reset or replaced according to AHJ's specifications. Coordinate the work with the AHJ's traffic department.

B. ENVIRONMENTAL CONDTIONS

1. Environmental Limitations: Proceed with pavement marking only on clean, dry surfaces and at a minimum ambient or surface temperature of 55 deg F for water-based materials, and not exceeding 95 deg F.

PART 2 PRODUCTS

2.01 PARKING BUMPERS

A. Concrete Wheel Stops: Precast, steel-reinforced, air-entrained concrete, 3000-psi (28-day) minimum compressive strength, 5-1/2 inches high by 8 inches wide by 72 inches long. Provide chamfered corners, transverse drainage slots on underside, and a minimum of two factory-formed or drilled vertical holes through wheel stop for anchoring to substrate.

B. Surface Appearance: Free of pockets, sand streaks, honeycombs, and other obvious defects. Corners shall be uniform, straight, and sharp.

C. Mounting Hardware: Galvanized-steel spike or dowel, 1/2-inch diameter, 10-inch minimum length or hardware as standard with wheel-stop manufacturer.

2.02 PAVEMENT MARKINGS

A. Performance Requirements

1. Accessibility Standard: Comply with applicable provisions in the USDOJ's "2010 ADA Standards for Accessible Design".

B. Pavement Marking Paint

1. Pavement-Marking Paint: Latex, waterborne emulsion, lead and chromate free, ready mixed, complying with FS TT-P-1952, Type II, with drying time of less than 45 minutes.
   a. Colors: White, Yellow, Blue, and Red.

2.03 PREFORMED TRAFFIC-CALMING DEVICES

A. Speed Bumps: Solid, integrally colored, 96 percent postconsumer or commingled postconsumer and pre-consumer recycled rubber or plastic; UV stabilized. Provide factory-formed or -drilled vertical holes for anchoring to substrate.

1. Size: 2 inches high by 10 inches wide by 72 inches long; with tapered, square, or rounded ends.
2. Size: Modular assembly 3 inches high by 12 feet in overall width, with overall length as dimensioned on Drawings; and with tapered, square, or rounded ends.
3. Color: Black.
4. Embedded Markings: Molded-in, yellow reflective markings, permanently inset in exposed surface.
5. Mounting Hardware: Galvanized-steel lag screw, shield, and washers; 1/2-inch diameter, 8-inch minimum length or hardware as standard with device manufacturer.
6. Adhesive: As recommended by device manufacturer for adhesion to pavement.

PART 3 EXECUTION

3.01 PARKING BUMPERS

A. EXAMINATION

1. Verify that pavement is in suitable condition to begin installation according to manufacturer's written instructions.
2. Proceed with installation only after unsatisfactory conditions have been corrected.

B. INSTALLATION

1. General: Install wheel stops according to manufacturer's written instructions unless otherwise indicated.
2. Install wheel stops in bed of adhesive before anchoring.
3. Securely anchor wheel stops to pavement with hardware in each preformed vertical hole in wheel stop as recommended in writing by manufacturer. Recess head of hardware beneath top of wheel stop.

3.02 PAVEMENT MARKINGS

A. EXAMINATION

1. Verify that pavement is dry and in suitable condition to begin pavement marking according to manufacturer's written instructions.
2. Proceed with pavement marking only after unsatisfactory conditions have been corrected.

B. APPLICATION

1. Do not apply pavement-marking paint until layout, colors, and placement have been verified with Architect.
2. Allow paving to age for a minimum of 30 days before starting pavement marking.
3. Sweep and clean surface to eliminate loose material and dust.
4. Apply paint with mechanical equipment to produce pavement markings, of dimensions indicated, with uniform, straight edges. Apply at manufacturer's recommended rates to provide a minimum wet film thickness of 15 mils.
    a. Apply graphic symbols and lettering with paint-resistant, die-cut stencils, firmly secured to pavement. Mask an extended area beyond edges of each stencil to prevent paint application beyond the stencil. Apply paint so that it cannot run beneath the stencil.

C. FIRE LANES

1. Where fire lines are indicated, a 6-in wide red stripe with 4-inch high white letters with a 3/4-inch stroke stating, “FIRE LANE NO PARKING” shall be provided showing the boundary of the fire lane. The words “FIRE LANE NO PARKING” must be grouped together as a phase. The phrase shall be painted a maximum distance of every 40 feet C-C along the length of the fire lane. When a curb is along the fire lane, the face and top of the curb shall be painted with the phrase painted on the face of the curb.

D. PROTECTING AND CLEANING

1. Protect pavement markings from damage and wear during remainder of construction period.
2. Clean spillage and soiling from adjacent construction using cleaning agents and procedures recommended by manufacturer of affected construction.

3.03 PREFORMED TRAFFIC-CALMING DEVICES

A. EXAMINATION

1. Verify that pavement is in suitable condition to begin installation according to manufacturer's written instructions.
2. Proceed with installation only after unsatisfactory conditions have been corrected.

B. INSTALLATION

1. General: Install manufactured traffic-calming devices according to manufacturer's written instructions unless otherwise indicated.
2. Install devices in bed of adhesive before anchoring.
3. Securely anchor devices to pavement with hardware spaced as recommended in writing by manufacturer for heavy traffic. Recess head of hardware beneath top surface of device.

END OF SECTION 32 1700

SECTION 32 1300

RIGID PAVING

PART 1 GENERAL

1.01 RELATED DOCUMENTS

A. Drawings and general provisions of the Contract, including General and Supplementary Conditions and Division 01 Specification Sections, apply to this Section.

1.02 SUMMARY

A. The work under this section of the Specifications includes all labor, materials, equipment, and services necessary for RIGID PAVING as shown on the Drawings and herein specified and in accordance with the Contract Documents. All costs for labor, materials, equipment, and services necessary for RIGID PAVING shall be included in the bid prices for the work.

1.03 SECTION INCLUDES

A. Concrete Paving

1.04 RELATED SECTIONS

A. 31 2300 Excavation and Fill
B. 31 2500 Erosion and Sedimentation Controls
C. 32 1100 Base Courses
D. 32 1600 Curbs and Gutters
E. 32 1373 Concrete Paving Joint Sealants

1.05 DEFINITIONS

A. AHJ – Authority Having Jurisdiction

1. City of Tahlequah

B. Cementitious Materials - Portland cement alone or in combination with one or more of blended hydraulic cement, fly ash and other pozzolans, and ground granulated blast-furnace slag.

1.06 ACTION SUBMITTALS

A. Design Mixtures: For each concrete paving mixture. Include alternate design mixtures when characteristics of materials, Project conditions, weather, test results, or other circumstances warrant adjustments.

B. Paving Plan:

1. Provide a paving plan that shows the proposed concrete placed each day.
2. Provide a joint layout plan that shows isolation joints, longitudinal construction joints, longitudinal contraction joints, transverse contraction joints, and planned transverse construction joints.

1.07 INFORMATIONAL SUBMITTALS

A. Material Certificates: For the following, from manufacturer:

1. Cementitious materials.
2. Steel reinforcement and reinforcement accessories.
3. Applied finish materials.
4. Bonding agent or epoxy adhesive.
5. Joint fillers.

B. Material Test Reports: For each of the following:

1. Aggregates. Include service-record data indicating absence of deleterious expansion of concrete due to alkali-aggregate reactivity.

1.08 QUALITY ASSURANCE

A. Ready-Mix-Concrete Manufacturer Qualifications: A firm experienced in manufacturing ready-mixed concrete products and that complies with ASTM C 94 requirements for production facilities and equipment.

1. Manufacturer certified according to NRMCA's "Certification of Ready Mixed Concrete Production Facilities" (Quality Control Manual - Section 3, "Plant Certification Checklist").

B. Concrete Testing Service: Engage a qualified testing agency to perform material evaluation tests and to design concrete mixtures.

C. ACI Publications: Comply with ACI 301 unless otherwise indicated.

D. Preconstruction Conference

1. Conduct a preconstruction conference. Subcontractors that will be performing the work shall attend the preconstruction conference. Notify ENGINEER one week (7 days) prior to the date of the meeting.
2. Review methods and procedures related to concrete paving, including but not limited to, the following:
    a. Concrete mixture design.
    b. Quality control of concrete materials and concrete paving construction practices.
3. Require representatives of each entity directly concerned with concrete paving to attend, including the following:
    a. Contractor's superintendent.
    b. Independent testing agency responsible for concrete design mixtures.
    c. Ready-mix concrete manufacturer.
    d. Concrete paving subcontractor.

E. Regulatory Requirements

1. All materials and methods shall comply with the requirements of the AHJ.
2. If the AHJ has not adopted specifications for materials and methods, the Oklahoma Department of Transportation’s 2009 Specifications shall be used.

1.09 PERMITS

A. CONTRACTOR shall make application; pay permit fees; provide payment and performance bonds required of the CONTRACTOR by the AHJ.

1.10 TOPOGRAPHIC SURVEY

A. OWNER has or will perform a survey of the site, stake the property limits, and provide a reference benchmark elevation.

1.11 UNDERGROUND UTILITIES

A. CONTRACTOR shall contact OKIE (811 or 1-800-522-OKIE) prior to construction for locating existing utilities.

B. The underground utilities shown on the Drawings have been located from field survey surface information and existing drawings. ENGINEER and Surveyor make no guarantee that the underground utilities shown comprise all such utilities in the area, either in service or abandoned. The underground utilities are located as accurately as possible from information available; however, ENGINEER and Surveyor further do not guarantee

that the underground utilities shown are in the exact location indicated either vertically or horizontally. ENGINEER and Surveyor have not physically located the underground utilities by probing, excavating, hydrovac, or by any other means.

C. CONTRACTOR shall notify all utility companies and governmental agencies who may have utility lines on or about the premises or who may be affected by the construction. Notice shall be given no less than twenty-four hours prior to any work that may interfere with a utility.

D. All existing structures, improvement and utilities designated to remain shall be adequately protected from damage that might otherwise occur due to construction operations. Where construction comes in close proximity to existing structures, utilities or appurtenances, or if it becomes necessary to move services, poles, guy wires, pipe lines or other obstructions, CONTRACTOR shall notify and cooperate with the owner of the utility, structure, or appurtenance. The utility lines and other existing structures shown on the plans are for information only and are not guaranteed to be complete or accurate as to location and/or depth. CONTRACTOR shall be liable for damage to any utilities resulting from the CONTRACTOR's operations. During construction, all fire hydrants, valve boxes, fire or police call boxes and other existing utility controls shall be left intact, unobstructed and accessible unless noted on the plan.

E. Contractor shall satisfy themselves as to the actual existing subsurface conditions, including but not limited to the depth, location and sizes of pipe or conduits of various kinds in place prior to beginning work. Where the exact depth of any utility or obstruction is not shown on a plan, excavation shall be made prior to reaching the obstruction in order to determine adjustments in grade if needed to prevent interference. Redesign to eliminate conflicts may be necessary.

1.12 CONSTRUCTION CONTROL

A. Do not commence work until temporary erosion and sedimentation control measures are in place.

B. CONTRACTOR shall be responsible for properly laying out the work, and for lines and measurements for the work executed under the Contract Documents. Verify the figures shown on the Drawings before ordering any materials and laying out the work, and report errors or inaccuracies in writing to the ENGINEER before commencing work. The ENGINEER or his representative will in no case assume the responsibility for laying out the work.

C. Existing survey points other than those shown on the Drawings shall not be considered as acceptable control points unless approved by the ENGINEER. If approval is secured, CONTRACTOR remains responsible for maintaining them and for their accuracy. Be responsible for preserving all existing iron or metal, and all concrete survey points or monuments for the construction period.

1.13 PROJECT CONDTIONS

A. TRAFFIC

1. A Work Zone Permit must be obtained from the AHJ at least two (2) working days prior to the start of work and/or placing or removing any barricades or modifying existing traffic control devices.
2. CONTRACTOR shall be responsible for erecting and maintaining barricades and other traffic warning devices as necessary around the perimeter of construction and adjacent to any open trenches. Provide and maintain adequate detours around the work under construction. Provide sufficient lights, warning signs, and watchmen for the safety of the public.
3. Any temporary street closure shall be coordinated with and approved by the AHJ. CONTRACTOR shall establish all detour routes while streets are closed during

construction. CONTRACTOR shall notify Fire, Police, and EMSA headquarters when any street is temporarily closed.

4. CONTRACTOR is responsible for the prompt replacement and/or repair of all traffic control devices and appurtenances damaged or disturbed due to construction. Any existing traffic signals, signal loops, conduits, cables, and other traffic control devices affected by the work shall be reset or replaced according to AHJ's specifications. Coordinate the work with the AHJ's traffic department.

B. UTILITY INTERRUPTIONS

1. Do not interrupt any utility serving facilities occupied by Owner or others unless permitted by OWNER and the owner(s) of the utility. Temporary utility service shall be provided for any interruption. Notify OWNER and ENGINEER one week (7 days) in advance of proposed interruption of utility.

C. SUBSURFACE CONDITIONS

1. A geotechnical report has been prepared for this Project and is available for information only. The opinions expressed in this report are those of geotechnical engineer and represent interpretations of subsoil conditions, tests, and results of analyses conducted by geotechnical engineer. Owner will not be responsible for interpretations or conclusions drawn from the data.

D. EXCAVATION AND TRENCH SAFETY SYSTEMS

1. CONTRACTOR shall be responsible for complying with State laws and Federal regulations relating to excavation and trench safety, including those which may be enacted during the performance under this Contract. CONTRACTOR is advised that Federal Regulations 29 C.F.R. 1926.650-1926.652 have been, in their most recent version as amended, in effect since January 2, 1990. CONTRACTOR shall fully comply with the U.S. Department of Labor Occupational Safety and Health Administration (OSHA) regulations pertaining to excavations, trenching, and shoring and shall provide and familiarize its employees involved in excavation and trenching with the provisions in OSHA Pamphlet Number 2226, Excavating and Trenching Operations.

1.14 HAZARDOUS CONDITIONS

A. If CONTRACTOR encounters a Hazardous Environmental Condition or if CONTRACTOR or anyone for whom CONTRACTOR is responsible creates a Hazardous Environmental Condition, CONTRACTOR shall immediately: (i) secure or otherwise isolate such condition; (ii) stop all Work in connection with such condition and in any area affected thereby (except in an emergency); and (iii) notify OWNER and ENGINEER (and promptly thereafter confirm such notice in writing). OWNER shall promptly consult with ENGINEER concerning the necessity for OWNER to retain a qualified expert to evaluate such condition or take corrective action, if any.

PART 2 PRODUCTS

2.01 ADOPTED PRODUCT REQUIRMENTS

A. All materials and products shall comply with the Oklahoma Department of Transportation's 2009 Specifications.

2.02 CONCRETE MIXTURES

A. Prepare design mixtures, proportioned according to ACI 301, for each type and strength of normal-weight concrete, and as determined by either laboratory trial mixtures or field experience.

1. Use a qualified independent testing agency for preparing and reporting proposed concrete design mixtures for the trial batch method.
2. When automatic machine placement is used, determine design mixtures and obtain laboratory test results that meet or exceed requirements.

B. Proportion mixtures to provide normal-weight concrete with the following properties:

1. Class AA
    a. Minimum 28 Day Compressive Strength: 4,000-psi
    b. Minimum Cement Content: 564 lb/yd3
    c. Air Content: 6.5% plus or minus 1.5%
    d. Water/Cement Ratio: 0.25 to 0.44 lb/lb
    e. Slump: 2 inches, plus or minus 1 inch.
2. Class A
    a. Minimum 28 Day Compressive Strength: 3,000-psi
    b. Minimum Cement Content: 517 lb/yd3
    c. Air Content: 6% plus or minus 1.5%
    d. Water/Cement Ratio: 0.25 to 0.48 lb/lb
    e. Slump: 2 inches, plus or minus 1 inch.
3. Class A (vehicular pavement)
    a. Minimum 28 Day Compressive Strength: 4,000-psi
    b. Minimum Cement Content: 517 lb/yd3
    c. Air Content: 6.5% plus or minus 1.5%
    d. Water/Cement Ratio: 0.25 to 0.48 lb/lb
    e. Slump: 2 inches, plus or minus 1 inch.
4. Class AP
    a. Minimum 28 Day Compressive Strength: 3,000-psi
    b. Minimum Cement Content: 470 lb/yd3
    c. Air Content: 6% plus or minus 1.5%
    d. Water/Cement Ratio: 0.25 to 0.48 lb/lb
    e. Slump: 2 inches, plus or minus 1 inch.
5. Class C
    a. Minimum 28 Day Compressive Strength: 2,400-psi
    b. Minimum Cement Content: 395 lb/yd3
    c. Air Content: 6% plus or minus 1.5%
    d. Water/Cement Ratio: 0.25 to 0.62 lb/lb
    e. Slump: 3 inches, plus or minus 1 inch.

C. Cementitious Materials: Use fly ash, ground granulated blast-furnace slag, as needed to reduce the total amount of portland cement which would otherwise be used. Limit percentage, by weight, of cementitious materials other than portland cement in concrete as follows:

1. November through March: Fly ash meeting the requirements of this section may be substituted for up to 15% of the required cement. Ground granulated blast furnace slag meeting the requirements of AASHTO M 302 Grade 100 or Grade 120 may be substituted for up to 25% of the required cement. A combination of up to 25% ground granulated blast furnace slag and up to 15% fly ash may be substituted for up to 40% of the required cement.
2. April through October: A combination of up to 25% ground granulated blast furnace slag and up to 20% fly ash may be substituted for up to 45% of the required cement.
3. Substitution shall be by weight: 1.0 pound for each 1.0 pound of cement. The concrete mix design shall be appropriately adjusted. These substitutions will not be allowed for high early strength concrete, Class P concrete or concrete

containing Type IP, Type I (PM), or Type I (SM) cement. If the specified minimum cement content is satisfied, additional fly ash or ground granulated blast furnace slag, or silica fume complying with ASTM C 1240, may be added to the mix when approved as part of the mix design.

D. Water Cement Ratio. Using the weight in pounds of each material, calculate the water-cement ratio (W/C) by the following equation: W/C = Water/ (Cement + Fly Ash + Blast Furnace Slag + Silica Fume) The water actually used is determined by the water measured into the batch plus the free water on wet aggregate minus the water absorbed by dry aggregate plus water in any admixture solutions and shall not exceed the limit specified.

E. Slump. The slump shall be as shown, or as specified in the contract documents, or as approved by the Engineer, and the consistency required shall be that which will provide satisfactory workability for the type work being done. Slump tests will be made during the progress of the work as a measure of uniformity of the consistency of the concrete. If using a high-range water reducing admixture, limit the slump to a maximum of 9 inches.

F. Compressive Strength. Compressive strength is based on the average of three test cylinders. When the class of concrete is not expressly indicated on the Plans, the following requirements shall govern:

1. Class AA. Use Class AA concrete in superstructure items, such as bridge floors, approach slabs, reinforced concrete piles, drilled shaft foundations, parapet walls, concrete rail and handrails.
2. Class A. Use Class A concrete for pavements and in substructures items, such as pier caps, columns, abutments, retaining walls, box culverts, and all reinforced concrete not requiring Class AA concrete.
3. Class AP. Use Class AP concrete in shoulders, merge areas and gore areas for PCC pavements, unless otherwise directed by plan notes.
4. Class C. Use Class C concrete for soil erosion control structures.

2.03 CONCRETE MIXING

A. Design and produce concrete mixtures that conform to the Class of concrete specified in this section and base the mix design on absolute volume. Proportion the coarse and fine aggregate in accordance with ACI 211.1. Use the least amount of sand and mixing water which will ensure concrete of the required workability for placement conditions. Meet the minimum strength within 72 hours of placement for high early strength concrete. Submit the mix design at least 14 days before production to the Engineer. Include at least the following information with each mix design:

1. Project identification
2. Name and address of contractor and producer
3. Mix design designation
4. Intended use of the mix design
5. Expected travel time from batch to placement
6. If the concrete will be pumped or not
7. Aggregate sources, gradation, moisture content, saturated surface dry batch mass, LA abrasion (AASHTO T 96), and freeze thaw durability (AASHTO T 103).
8. Fineness modulus of fine aggregate.
9. Cement type and source
10. Type of cement replacement, if used, and source
11. Type of admixtures and sources
12. Material proportions
13. Air content
14. Slump
15. Water / cement ratio

16. Strengths at 7 and 28 days
17. Strengths at 72 hours for high early strength concrete.

B. Do not place any concrete until the mix design is approved. Submit new mix designs if the mix design is rejected by the Engineer, the source of any material changes, or the mix design produces unacceptable workability or production test results.

2.04 CONCRETE MATERIALS

A. Portland cement: Shall conform to the requirements of AASHTO M 85 or AASHTO M 240. Type I, Type I (SM), Type I (PM), and Type IP shall be used in concrete for general concrete construction. Type II shall be used in concrete exposed to moderate sulphate action or moderate heat of hydration. Type III may be used when high early strength concrete is required. Unless otherwise approved by the Engineer, the product of only one mill of any one brand and type of portland cement shall be used on any structure or adjacent structures. Provide suitable means of storing and protecting the cement against dampness.

1. Cement which for any reason has become partially set or which contains lumps of caked cement will be rejected. Cement salvaged from discarded or used bags shall not be used. All methods of sampling and testing shall be in accordance with the requirements of AASHTO M 85 or AASHTO M 240.

B. Water

1. Provide water in accordance with AASHTO M 157, except as modified by the following:
    a. Water quality testing is not required if obtained from an approved ODEQ public water source.
    b. For other water sources, submit water quality test from the concrete producer showing compliance with AASHTO M 157 and the Chemical Limits for Mix Water listed below before use.
    c. A blend of concrete wash water and other water sources may be used if the concrete producer submits certification that the water meets the requirements of AASHTO M 157 and Chemical Limits for Mix Water and Acceptance Criteria for Questionable Water Supplies listed below.
    d. Test the blended water weekly for 4 weeks, or provide previous test reports. Test blended water monthly for compliance.
    e. Chemical Limits for Mix Water
        1) Chloride (Cl) shall less than 1,000 ppm (ASTM D 512)
        2) Sulfate shall be less than 1,000 ppm (ASTM D 516)
        3) Alkalis shall be less than 600 ppm (ASTM D 4191 and ASTM D 4192)
        4) Total solids shall be less than 50,000 ppm (AASHTO T 26)
    f. Acceptance Criteria for Questionable Water Supplies
        1) Compressive strength shall be a minimum 90% of the control at 7 days (AASHTO T 106)
        2) The time of set shall not deviate from the control less than 1 or more than 1.5 (AASHTO T 131)

C. Fine Aggregates

1. This specification applies to the quality and size of fine aggregates for Portland cement concrete pavements or bases, and incidental structures. Mortar sand shall meet the requirements of AASHTO M 45.
2. General Requirements.

a. Provide fine aggregates that consists of a single source natural sand in accordance with AASHTO M 6, Class A, except as modified by the Gradation paragraph below.
b. Alternatively, provide a fine aggregate that consists of a combination of natural sands or a combination of natural na manufactured sands in accordance with AASHTO M 6, Class A, except as modified by the following:
    1) Mix the two materials under controlled conditions and stockpile as a finished aggregate. Alternatively, the two materials may be combined from separate stockpiles during batching operations at a hydraulic cement concrete plant.
    2) Ensure the combined fine aggregate meets the gradation requirements below.
    3) If a manufactured sand is used in combination with natural sand, ensure the fine aggregate blend has an acid insoluble reside of at least 60 percent by weight when tested in accordance with OHD L-25.
    4) Obtain crushed fine aggregate (manufactured sand) from a coarse aggregate source on ODOT Material Division's "Approved Products List" for use in hydraulic cement concrete.

3. Deleterious Substances
    a. The amount of deleterious substances shall not exceed the following limits: Clay lumps and friable particles 3%, Coal and Lignite 0.25%
4. Organic Impurities
    a. All fine aggregate shall be free from injurious amounts of organic impurities. Aggregates subjected to the colorimetric test for organic impurities and producing a color darker than the standard shall be rejected unless they pass the mortar strength test as specified below. Should the aggregate show a darker color than that of samples originally approved for the work, its use shall be withheld until tests satisfactory to the Engineer have been made to determine whether the increased color is indicative of an injurious amount of deleterious substances. A fine aggregate failing in the test may be used provided that, when tested for the effect of organic impurities on strength of mortar, the relative strength at 7 and 28 days calculated in accordance with Section 10 of AASHTO T 71 is not less than 95 percent.
5. Gradation
    a. Provide fine aggregate with a fineness modulus between 2.3 and 3.1, that is well graded from coarse to fine, and when tested in accordance with AASHTO T 27 and AASHTO T11 meets the following gradation requirements.
        1) Sieve size: 3/8-in, percent passing: 100%.
        2) Sieve size: No. 4, percent passing 95-100%.
        3) Sieve size: No. 8, percent passing 80-100%.
        4) Sieve size: No. 16, percent passing 50-85%.
        5) Sieve size: No. 30, percent passing 25-60%.
        6) Sieve size: No. 50, percent passing 5-30%.
        7) Sieve size: No. 100, percent passing 0-10%.
    b. The gradation requirements above represent the extreme limits of suitability. Ensure the gradation from one source does not have large changes in percentages of gradation.

c. Use the average fineness modulus to determine the uniformity of the fine aggregate. The average fineness modulus is the average of the last 10 tests maintained by the ODOT Division Resident Engineer. Fine aggregates will be rejected from any one source having a variation in fineness modulus greater than 0.20 either way from the average. The fineness modulus of an aggregate is determined by adding the total percentages of material in the sample that are coarser than each of the following sieves (cumulative percentages retained), and dividing the sum by 100; No. 100, No. 50, No. 30, No. 16, No. 8, No. 4, 3/8 inch.

D. Coarse Aggregate

1. Provide coarse aggregate in accordance with AASHTO M 80, Class A, except as modified by the following:
   a. Ensure coarse aggregate produces Class A concrete with a durability factor of at least 50. Determine the durability factor after 350 cycles of alternate freezing and thawing in accordance with AASHTO T 161, Procedure A.
   b. The Los Angeles Abrasion percent wear shall be limited to a maximum of 40 percent after 500 revolutions when tested in accordance with AASHTO T 96.
   c. The sodium sulfate soundness requirement shall not apply.
   d. Ensure at least 70 percent of the coarse aggregate retained on the No. 4 sieve is crushed stone or mechanically crushed gravel with at least two fractured faces.
   e. Limit the quantity of flat or elongated pieces to 15 percent or less, at a ratio of 1:5, when tested in accordance with ASTM D 4791.
2. Gradation
   a. No. 357
      1) Sieve size 2-1/2-in., percent passing 100%.
      2) Sieve size 2-in., percent passing 95-100%.
      3) Sieve size 1-in., percent passing 35-70%.
      4) Sieve size 1/2-in., percent passing 10-30%.
      5) Sieve size No. 4, percent passing 0-5%.
      6) Sieve size No. 200, percent passing 0-1.5%.
   b. No. 57
      1) Sieve size 1-1/2-in., percent passing 100%.
      2) Sieve size 1-in., percent passing 95-100%.
      3) Sieve size 1/2-in., percent passing 25-60%.
      4) Sieve size No. 4, percent passing 0-10%.
      5) Sieve size No. 8, percent passing 0-5%.
      6) Sieve size No. 200, percent passing 0-2%.
   c. No. 67
      1) Sieve size 1-in., percent passing 100%.
      2) Sieve size 3/4-in., percent passing 90-100%.
      3) Sieve size 3/8-in., percent passing 20-55%.
      4) Sieve size No. 4, percent passing 0-10%.
      5) Sieve size No. 8, percent passing 0-5%.
      6) Sieve size No. 200, percent passing 0-2%.
   d. No. 7
      1) Sieve size 3/4-in., percent passing 100%.
      2) Sieve size 1/2-in., percent passing 90-100%.
      3) Sieve size 3/8-in., percent passing 40-70%.

4) Sieve size No. 4, percent passing 0-15%.
5) Sieve size No. 8, percent passing 0-5%.
6) Sieve size No. 200, percent passing 0-2%.

e. No. 8

1) Sieve size 1/2-in., percent passing 100%.
2) Sieve size 3/8-in., percent passing 85-100%.
3) Sieve size No. 4, percent passing 10-30%.
4) Sieve size No. 8, percent passing 0-10%.
5) Sieve size No. 16, percent passing 0-5%.
6) Sieve size No. 200, percent passing 0-2%.

3. Provide the specified sizes of coarse aggregate for the following types of concrete:
   a. No. 57 for Class A and Class AP concrete;
   b. Nol. 357 for massive Class A concrete;
   c. No. 57, No. 67, or No. 357 for Class C concrete;
   d. No. 57 or No. 67 for Class AA concrete.

2.05 ADMIXTURES

A. Provide air entraining admixtures in accordance with AASHTO M 154 and ASTM C 260.

B. Provide chemical admixtures in accordance with AASHTO M 194 for the type of admixture supplied. Admixtures certified by manufacturer to be compatible with other admixtures and to contain not more than 0.1 percent water-soluble chloride ions by mass of cementitious material.

1. Water-Reducing Admixture: ASTM C 494/C 494M, Type A.
2. Retarding Admixture: ASTM C 494/C 494M, Type B.
3. Water-Reducing and Retarding Admixture: ASTM C 494/C 494M, Type D.
4. High-Range, Water-Reducing Admixture: ASTM C 494/C 494M, Type F.
5. High-Range, Water-Reducing and Retarding Admixture: ASTM C 494/C 494M, Type G.
6. Plasticizing and Retarding Admixture: ASTM C 1017/C 1017M, Type II.

C. Color Pigment: ASTM C 979, synthetic mineral-oxide pigments or colored water-reducing admixtures; color stable, free of carbon black, nonfading, and resistant to lime and other alkalis.

1. Color: As indicated on Drawings.

2.06 FORMS

A. Form Materials: Plywood, metal, metal-framed plywood, or other approved panel-type materials to provide full-depth, continuous, straight, and smooth exposed surfaces.

B. Use flexible or uniformly curved forms for curves with a radius of 100 feet or less. Do not use notched and bent forms.

C. Form-Release Agent: Commercially formulated form-release agent that will not bond with, stain, or adversely affect concrete surfaces and that will not impair subsequent treatments of concrete surfaces.

2.07 STEEL REINFORCEMENT

A. Bar Steel Reinforcement – Billet Steel

1. Provide plain or deformed billet steel bars for concrete reinforcement and dowels in accordance with AASHTO M 31, Grade 60, except provide deformed billet steel bars for bent tie bars used in concrete paving in accordance with AASHTO M 31, Grade 40.

B. Welded Steel Wire Fabric

1. Provide cold drawn steel wire fabric for concrete reinforcement in accordance with AASHTO M 55 or AASHTO M 221.
2. Provide reinforcing fabric in flat sheets or rolls. Straighten bent or distorted materials before use. Ensure the fabric is free of excessive rust, scale, or coating that may impair the concrete bond.

C. Cold Drawn Steel Wire

1. Provide cold drawn steel wire, in accordance with AASHTO M 32, for spiral ties and other reinforcing shown on the Plans as “W” (Wire) sizes.

D. Epoxy Coated Reinforcing Bars

1. Provide epoxy coated (an electro-statically applied organic coating) reinforcing bars and epoxy coating material in accordance with AASHTO M 285, except the following:
    a. Provide reinforcing steel bars in accordance with Bar Steel Reinforcement – Billet Steel.
    b. Provide finished epoxy coating in a color and tone that easily gives visual indications of damage or corrosion staining.

E. Tie Bars

1. ASTM A 615, Grade 60, deformed.

F. Hook Bolts

1. ASTM A 307, Grade A, internally and externally threaded. Design hook-bolt joint assembly to hold coupling against paving form and in position during concreting operations, and to permit removal without damage to concrete or hook bolt.

G. Bar Supports

1. Bolsters, chairs, spacers, and other devices for spacing, supporting, and fastening reinforcing bars, welded wire reinforcement, and dowels in place. Manufacture bar supports according to CRSI's "Manual of Standard Practice" from steel wire, plastic, or precast concrete of greater compressive strength than concrete specified, and as follows:
    a. Equip wire bar supports with sand plates or horizontal runners where base material will not support chair legs.
    b. For epoxy-coated reinforcement, use epoxy-coated or other dielectric-polymer-coated wire bar supports.

2.08 FIBER REINFORCEMENT

A. Polypropylene fibers shall be 100 percent polypropylene, collated, fibrillated fibers manufactured to graduated lengths of equal proportions for secondary reinforcement. Polypropylene fibers shall be in accordance with ASTM C 1116 for Type III.

B. Steel fibers shall be in accordance with ASTM A 820, for Type II, cut-sheet steel. Provide steel fibers with and aspect ratio of 30:60 and from 1-1/2 to 2 inches long.

2.09 CURING MATERIALS

A. Absorptive Cover: AASHTO M 182, Class 3, burlap cloth made from jute or kenaf, weighing approximately 9 oz./sq. yd. dry or cotton mats.

B. Moisture-Retaining Cover: ASTM C 171, polyethylene film or white burlap-polyethylene sheet.

C. Water: Potable.

D. Evaporation Retarder: Waterborne, monomolecular, film forming, manufactured for application to fresh concrete.

E. Clear, Waterborne, Membrane-Forming Curing Compound: ASTM C 309, Type 1, Class B, dissipating.

F. White, Waterborne, Membrane-Forming Curing Compound: ASTM C 309, Type 2, Class B, dissipating.

2.10 RELATED MATERIALS

A. Slip-Resistive Aggregate Finish: Factory-graded, packaged, rustproof, nonglazing, abrasive aggregate of fused aluminum-oxide granules or crushed emery aggregate containing not less than 50 percent aluminum oxide and not less than 20 percent ferric oxide; unaffected by freezing, moisture, and cleaning materials.

B. Bonding Agent: ASTM C 1059, Type II, non-redispersible, acrylic emulsion or styrene butadiene.

C. Epoxy Bonding Adhesive: ASTM C 881, two-component epoxy resin capable of humid curing and bonding to damp surfaces; of class suitable for application temperature, of grade complying with requirements, and of the following types:

1. Types IV and V, load bearing, for bonding hardened or freshly mixed concrete to hardened concrete.

2.11 DETECTABLE WARNING MATERIALS

A. Detectable Warning Stamp: Semi-rigid polyurethane mats with formed underside capable of imprinting detectable warning pattern on plastic concrete; perforated with a vent hole at each dome.

1. Size of Stamp: One piece matching detectable warning area shown on Drawings.

B. Liquid Release Agent: Manufacturer's standard, clear, evaporating formulation designed to facilitate release of stamp mats.

PART 3 EXECUTION

3.01 ADOPTED PLACEMENT REQUIREMENTS

A. The placement of RIGID PAVING shall comply with the Oklahoma Department of Transportation’s 2009 Specifications.

3.02 EARTHWORK AND BASE COURSE

A. Perform earthwork according to 31 2300 Excavation and Fill.

B. Provide base course according to 32 1100 Base Courses.

3.03 EDGE FORMS AND SCREED CONSTRUCTION

A. Set, brace, and secure edge forms, bulkheads, and intermediate screed guides to required lines, grades, and elevations. Install forms to allow continuous progress of work and so forms can remain in place at least 24 hours after concrete placement.

B. Clean forms after each use and coat with form-release agent to ensure separation from concrete without damage.

3.04 STEEL REINFORCEMENT

A. General: Comply with CRSI's "Manual of Standard Practice" for fabricating, placing, and supporting reinforcement.

B. Clean reinforcement of loose rust and mill scale, earth, ice, or other bond-reducing materials.

C. Arrange, space, and securely tie bars and bar supports to hold reinforcement in position during concrete placement. Maintain minimum cover to reinforcement.

D. Install welded wire reinforcement in lengths as long as practicable. Lap adjoining pieces at least one full mesh, and lace splices with wire. Offset laps of adjoining widths to prevent continuous laps in either direction.

E. Zinc-Coated Reinforcement: Use galvanized-steel wire ties to fasten zinc-coated reinforcement. Repair cut and damaged zinc coatings with zinc repair material.

F. Epoxy-Coated Reinforcement: Use epoxy-coated steel wire ties to fasten epoxy-coated reinforcement. Repair cut and damaged epoxy coatings with epoxy repair coating according to ASTM D 3963.

G. Install fabricated bar mats in lengths as long as practicable. Handle units to keep them flat and free of distortions. Straighten bends, kinks, and other irregularities, or replace units as required before placement. Set mats for a minimum 2-inch overlap of adjacent mats.

3.05 JOINTS

A. General: Form construction, isolation, and contraction joints and tool edges true to line, with faces perpendicular to surface plane of concrete. Construct transverse joints at right angles to centerline unless otherwise indicated.

1. When joining existing paving, place transverse joints to align with previously placed joints unless otherwise indicated.

B. Joint Spacing Requirements

1. Avoid odd-shaped slabs.
2. In parking lots, longitudinal joints shall be parallel to the direction of vehicle travel, and can be made to delineate drive lanes and parking stalls. Transverse joints shall divide the paving lanes into panels.
3. Longitudinal joint spacing shall not exceed 12.5 feet.
4. The maximum transverse joint spacing for drives shall be 24 to 30 times the slab thickness or 15 ft, whichever is less. Divide the length between the concrete being placed into equally spaced joints.
5. Slabs shall be as square as possible. The length of a panel shall not be more than 25% greater than its width.
6. All transverse contraction joints shall be continuous through the curb and have a depth equal to ¼ to 1/3 the pavement thickness.
7. In isolation joints, the filler shall be full depth and extend through the curb. Isolation joints shall be used to isolate the pavement from light standard foundations, storm sewer inlets, manholes, and buildings.
8. If there is no curb, longitudinal joints shall be tied with deformed tiebars.
9. Offsets at radius points shall be at least 1.5 ft wide. Joint intersection angles less than 60 degrees shall be avoided.
10. Minor adjustments in joint location made by shifting or skewing to meet inlets and manholes is allowable.
11. Place joints to meet drainage structures, if possible.

C. Construction Joints: Set construction joints at side and end terminations of paving and at locations where paving operations are stopped for more than one-half hour unless paving terminates at isolation joints.

1. Continue steel reinforcement across construction joints unless otherwise indicated. Do not continue reinforcement through sides of paving strips unless otherwise indicated.
2. Provide tie bars at sides of paving strips where indicated.
3. Butt Joints: Use epoxy bonding adhesive at joint locations where fresh concrete is placed against hardened or partially hardened concrete surfaces.
4. Keyed Joints: Provide preformed keyway-section forms or bulkhead forms with keys unless otherwise indicated. Embed keys at least 1-1/2 inches into concrete.

5. Doweled Joints: Install dowel bars and support assemblies at joints where indicated. Lubricate or coat with asphalt one-half of dowel length to prevent concrete bonding to one side of joint.

D. Isolation Joints: Form isolation joints of preformed joint-filler strips abutting concrete curbs, catch basins, manholes, inlets, structures, other fixed objects, and where indicated.

1. Locate expansion joints at intervals of 50 feet unless otherwise indicated.
2. Extend joint fillers full width and depth of joint.
3. Terminate joint filler not less than 1/2 inch or more than 1 inch below finished surface if joint sealant is indicated.
4. Place top of joint filler flush with finished concrete surface if joint sealant is not indicated.
5. Furnish joint fillers in one-piece lengths. Where more than one length is required, lace or clip joint-filler sections together.
6. During concrete placement, protect top edge of joint filler with metal, plastic, or other temporary preformed cap. Remove protective cap after concrete has been placed on both sides of joint.

E. Contraction Joints: Form weakened-plane contraction joints, sectioning concrete into areas as indicated. Construct contraction joints for a depth equal to at least one-fourth of the concrete thickness, as follows:

1. Grooved Joints: Form contraction joints after initial floating by grooving and finishing each edge of joint with grooving tool to a 1/4-inch radius. Repeat grooving of contraction joints after applying surface finishes. Eliminate grooving-tool marks on concrete surfaces.
    a. Tolerance: Ensure that grooved joints are within 3 inches either way from centers of dowels.
2. Sawed Joints: Form contraction joints with power saws equipped with shatterproof abrasive or diamond-rimmed blades. Cut 1/8-inch wide joints into concrete when cutting action will not tear, abrade, or otherwise damage surface and before developing random contraction cracks.
    a. Tolerance: Ensure that sawed joints are within 3 inches either way from centers of dowels.
3. Doweled Contraction Joints: Install dowel bars and support assemblies at joints where indicated. Lubricate or coat with asphalt one-half of dowel length to prevent concrete bonding to one side of joint.

F. Edging: After initial floating, tool edges of paving, gutters, curbs, and joints in concrete with an edging tool to a 1/4-inch radius. Repeat tooling of edges after applying surface finishes. Eliminate edging-tool marks on concrete surfaces.

3.06 CONCRETE PLACEMENT

A. Before placing concrete, inspect and complete formwork installation, steel reinforcement, and items to be embedded or cast-in.

B. Remove snow, ice, or frost from subbase surface and steel reinforcement before placing concrete. Do not place concrete on frozen surfaces.

C. Moisten subbase to provide a uniform dampened condition at time concrete is placed. Do not place concrete around manholes or other structures until they are at required finish elevation and alignment.

D. Comply with ACI 301 requirements for measuring, mixing, transporting, and placing concrete.

E. Do not add water to concrete during delivery or at Project site. Do not add water to fresh concrete after testing.

F. Deposit and spread concrete in a continuous operation between transverse joints. Do not push or drag concrete into place or use vibrators to move concrete into place.

G. Consolidate concrete according to ACI 301 by mechanical vibrating equipment supplemented by hand spading, rodding, or tamping.

H. Screed paving surface with a straightedge and strike off.

I. Commence initial floating using bull floats or darbies to impart an open-textured and uniform surface plane before excess moisture or bleed water appears on the surface. Do not further disturb concrete surfaces before beginning finishing operations or spreading surface treatments.

J. Curbs and Gutters: Use design mixture for automatic machine placement. Produce curbs and gutters to required cross section, lines, grades, finish, and jointing.

K. Slip-Form Paving: Use design mixture for automatic machine placement. Produce paving to required thickness, lines, grades, finish, and jointing.

1. Compact subbase and prepare subgrade of sufficient width to prevent displacement of slip-form paving machine during operations.

L. Cold-Weather Placement: Protect concrete work from physical damage or reduced strength that could be caused by frost, freezing, or low temperatures. Comply with ACI 306.1 and the following:

1. When air temperature has fallen to or is expected to fall below 40 deg F, uniformly heat water and aggregates before mixing to obtain a concrete mixture temperature of not less than 50 deg F and not more than 80 deg F at point of placement.
2. Do not use frozen materials or materials containing ice or snow.
3. Do not use calcium chloride, salt, or other materials containing antifreeze agents or chemical accelerators unless otherwise specified and approved in design mixtures.

M. Hot-Weather Placement: Comply with ACI 301 and as follows when hot-weather conditions exist:

1. Cool ingredients before mixing to maintain concrete temperature below 90 deg F at time of placement. Chilled mixing water or chopped ice may be used to control temperature, provided water equivalent of ice is calculated in total amount of mixing water. Using liquid nitrogen to cool concrete is Contractor's option.
2. Cover steel reinforcement with water-soaked burlap so steel temperature will not exceed ambient air temperature immediately before embedding in concrete.
3. Fog-spray forms, steel reinforcement, and subgrade just before placing concrete. Keep subgrade moisture uniform without standing water, soft spots, or dry areas.

3.07 FLOAT FINISHING

A. General: Do not add water to concrete surfaces during finishing operations.

B. Float Finish: Begin the second floating operation when bleed-water sheen has disappeared and concrete surface has stiffened sufficiently to permit operations. Float surface with power-driven floats or by hand floating if area is small or inaccessible to power units. Finish surfaces to true planes. Cut down high spots and fill low spots. Refloat surface immediately to uniform granular texture.

1. Burlap Finish: Drag a seamless strip of damp burlap across float-finished concrete, perpendicular to line of traffic, to provide a uniform, gritty texture.

2. Medium-to-Fine-Textured Broom Finish: Draw a soft-bristle broom across float-finished concrete surface perpendicular to line of traffic to provide a uniform, fine-line texture.
3. Medium-to-Coarse-Textured Broom Finish: Provide a coarse finish by striating float-finished concrete surface 1/16 to 1/8 inch deep with a stiff-bristled broom, perpendicular to line of traffic.

3.08 CONCRETE PROTECTION AND CURING

A. General: Protect freshly placed concrete from premature drying and excessive cold or hot temperatures.
B. Comply with ACI 306.1 for cold-weather protection.
C. Evaporation Retarder: Apply evaporation retarder to concrete surfaces if hot, dry, or windy conditions cause moisture loss approaching 0.2 lb/sq. ft. x h before and during finishing operations. Apply according to manufacturer's written instructions after placing, screeding, and bull floating or darbying concrete but before float finishing.
D. Begin curing after finishing concrete but not before free water has disappeared from concrete surface.
E. Curing Methods: Cure concrete by moisture curing, moisture-retaining-cover curing, curing compound or a combination of these as follows:

1. Moisture Curing: Keep surfaces continuously moist for not less than seven days with the following materials:
    a. Water.
    b. Continuous water-fog spray.
    c. Absorptive cover, water saturated and kept continuously wet. Cover concrete surfaces and edges with 12-inch lap over adjacent absorptive covers.
2. Moisture-Retaining-Cover Curing: Cover concrete surfaces with moisture-retaining cover, placed in widest practicable width, with sides and ends lapped at least 12 inches and sealed by waterproof tape or adhesive. Immediately repair any holes or tears occurring during installation or curing period using cover material and waterproof tape.

F. Curing Compound: Apply uniformly in continuous operation by power spray or roller according to manufacturer's written instructions. Recoat areas that have been subjected to heavy rainfall within three hours after initial application. Maintain continuity of coating, and repair damage during curing period.

3.09 PAVING TOLERANCES

A. Comply with tolerances in Oklahoma Department of Transportation’s 2009 Specifications and as follows:

1. Elevation: 1/2 inch.
2. Thickness: Plus 3/8 inch, minus 1/4 inch.
3. Surface: Gap below 10-foot unleveled straightedge not to exceed 1/4 inch.
4. Alignment of tie-bar end relative to line perpendicular to paving edge: ½ inch per 12 inches of tie bar.
5. Lateral Alignment and Spacing of Dowels: 1 inch.
6. Vertical alignment of dowels: ¼ inch.
7. Joint Spacing: 3 inches.
8. Contraction Joint Depth: Plus 1/4 inch, no minus.
9. Joint Width: Plus 1/8 inch, no minus.

3.10 PAVEMENT MARKING

A. Allow concrete paving to cure for a minimum of 28 days and be dry before starting pavement marking.
B. Sweep and clean surface to eliminate loose material and dust.
C. Apply paint with mechanical equipment to produce markings of dimensions indicated with uniform, straight edges. Apply at manufacturer's recommended rates to provide a minimum wet film thickness of 15 mils.

3.11 FIELD QUALITY CONTROL

A. Engage a qualified testing agency to perform tests and inspections.
B. Testing of composite samples of fresh concrete obtained according to ASTM C 172 shall be performed according to the following requirements:

1. Testing Frequency:
    a. Obtain at least one composite sample for each 100 cu.yd. or fraction thereof of each concrete mixture placed each day.
    b. When frequency of testing will provide fewer than five compressive-strength tests for each concrete mixture, testing shall be conducted from at least five randomly selected batches or from each batch if fewer than five are used.

C. Slump: ASTM C 143; one test at point of placement for each composite sample, but not less than one test for each day's pour of each concrete mixture. Perform additional tests when concrete consistency appears to change.
D. Air Content: ASTM C 231, pressure method; one test for each composite sample, but not less than one test for each day's pour of each concrete mixture.
E. Concrete Temperature: ASTM C 1064; one test hourly when air temperature is 40 deg F and below and when it is 80 deg F and above, and one test for each composite sample.
F. Compression Test Specimens: ASTM C 31; cast and laboratory cure one set of three standard cylinder specimens for each composite sample.
G. Compressive-Strength Tests: ASTM C 39; test one specimen at seven days and two specimens at 28 days.

1. A compressive-strength test shall be the average compressive strength from two specimens obtained from same composite sample and tested at 28 days.

H. Strength of each concrete mixture will be satisfactory if average of any three consecutive compressive-strength tests equals or exceeds specified compressive strength and no compressive-strength test value falls below specified compressive strength by more than 500 psi.
I. Test results shall be reported in writing to Engineer, concrete manufacturer, and Contractor within 48 hours of testing. Reports of compressive-strength tests shall contain Project identification name and number, date of concrete placement, name of concrete testing and inspecting agency, location of concrete batch in Work, design compressive strength at 28 days, concrete mixture proportions and materials, compressive breaking strength, and type of break for both 7- and 28-day tests.
J. Nondestructive Testing: Impact hammer, sonoscope, or other nondestructive device may be permitted by Engineer but will not be used as sole basis for approval or rejection of concrete.
K. Additional Tests: Testing and inspecting agency shall make additional tests of concrete when test results indicate that slump, air entrainment, compressive strengths, or other requirements have not been met, as directed by Engineer.
L. Concrete paving will be considered defective if it does not pass tests and inspections.

M. Additional testing and inspecting, at Contractor's expense, will be performed to determine compliance of replaced or additional work with specified requirements.

N. Prepare test and inspection reports.

3.12 ENGINEER'S ACCEPTANCE OF PAVEMENT

A. Pavement slabs with unsound concrete, uncontrolled cracking, malfunctioning sawed joints, spalling, honeycombing, surface irregularities, insufficient thickness, or other deficiencies associated will poor quality pavements may be rejected by Engineer.

B. Pavement rejected by Engineer shall be removed and replaced at no additional cost to Owner.

C. When replacing rejected slabs, remove a width of at least one lane and a length of at least 15 ft. If the removal is within 15 ft of any transverse joint, remove the slab to the joint.

D. If a deficient unit does not warrant removal, as directed by Engineer, the Owner will not pay for the deficient unit.

3.13 REPAIRS AND PROTECTION

A. Remove and replace concrete paving that is broken, damaged, or defective or that does not comply with requirements in this Section. Remove work in complete sections from joint to joint unless otherwise approved by Engineer.

B. Protect concrete paving from damage. Exclude traffic from paving for at least 14 days after placement. When construction traffic is permitted, maintain paving as clean as possible by removing surface stains and spillage of materials as they occur.

C. Maintain concrete paving free of stains, discoloration, dirt, and other foreign material. Sweep paving not more than two days before date scheduled for Substantial Completion inspections.

END OF SECTION 32 1300

SECTION 32 1373

CONCRETE PAVING JOINT SEALANTS

PART 1 GENERAL

1.01. RELATED DOCUMENTS

A. Drawings and general provisions of the Contract, including General and Supplementary Conditions and Division 01 Specification Sections, apply to this Section.

1.02. SUMMARY

A. The work under this section of the Specifications includes all labor, materials, equipment, and services necessary for CONCRETE PAVING JOINT SEALANTS as shown on the Drawings and herein specified and in accordance with the Contract Documents. All costs for labor, materials, equipment, and services necessary for CONCRETE PAVING JOINT SEALANTS shall be included in the bid prices for the work.

1.03. SECTION INCLUDES

A. Cold-applied joint sealants
B. Hot-applied joint sealants

1.04. RELATED SECTIONS

A. 32 13 00 Rigid Paving

1.05. DEFINITIONS

A. AHJ – Authority Having Jurisdiction

1. City of Tahlequah

1.06. ACTION SUBMITTALS

A. Product Data: Joint-Sealants.

1.07. INFORMATIONAL SUBMITTALS

A. Product Certificates: For each type of joint sealant and accessory, from manufacturer.
B. Product Test Reports: Based on evaluation of comprehensive tests performed by a qualified testing agency, for joint sealants.

1.08. DELIVERY, STORAGE, AND HANDLING

1.09. QUALITY ASSURANCE

A. Source Limitations: Obtain each type of joint sealant from single source from single manufacturer.
B. REGULATORY REQUIREMENTS

1. All materials and methods shall comply with the requirements of the AHJ.
2. If the AHJ has not adopted specifications for materials and methods, the Oklahoma Department of Transportation's 2009 Specifications shall be used.

1.10. PROJECT CONDTIONS

A. Do not proceed with installation of joint sealants under the following conditions:

1. When ambient and substrate temperature conditions are outside limits permitted by joint-sealant manufacturer or are below 40 deg F.
2. When joint substrates are wet.
3. Where joint widths are less than those allowed by joint-sealant manufacturer for applications indicated.

4. Where contaminants capable of interfering with adhesion have not yet been removed from joint substrates

PART 2 PRODUCTS

2.01. ADOPTED PRODUCT REQUIRMENTS

A. All materials and products shall comply with the Oklahoma Department of Transportation's 2009 Specifications.

2.02. MATERIALS

A. Compatibility: Provide joint sealants, backing materials, and other related materials that are compatible with one another and with joint substrates under conditions of service and application, as demonstrated by joint-sealant manufacturer based on testing and field experience.

B. Colors of Exposed Joint Sealants: As selected by Architect from manufacturer's full range.

2.03. COLD-APPLIED JOINT SEALANTS

A. Single-Component, Nonsag, Silicone Joint Sealant for Concrete: ASTM D 5893, Type NS.

B. Single-Component, Self-Leveling, Silicone Joint Sealant for Concrete: ASTM D 5893, Type SL.

C. Multicomponent, Pourable, Traffic-Grade, Urethane Joint Sealant for Concrete: ASTM C 920, Type M, Grade P, Class 25, for Use T.

2.04. HOT-APPLIED JOINT SEALANTS

A. Hot-Applied, Single-Component Joint Sealant for Concrete: ASTM D 3406.

B. Hot-Applied, Single-Component Joint Sealant for Concrete and Asphalt: ASTM D 6690, Types I, II, and III.

2.05. JOINT-SEALANT BACKER MATERIALS

A. General: Provide joint-sealant backer materials that are nonstaining; are compatible with joint substrates, sealants, primers, and other joint fillers; and are approved for applications indicated by joint-sealant manufacturer based on field experience and laboratory testing.

B. Round Backer Rods for Cold- and Hot-Applied Joint Sealants: ASTM D 5249, Type 1, of diameter and density required to control sealant depth and prevent bottom-side adhesion of sealant.

C. Round Backer Rods for Cold-Applied Joint Sealants: ASTM D 5249, Type 3, of diameter and density required to control joint-sealant depth and prevent bottom-side adhesion of sealant.

D. Backer Strips for Cold- and Hot-Applied Joint Sealants: ASTM D 5249; Type 2; of thickness and width required to control joint-sealant depth, prevent bottom-side adhesion of sealant, and fill remainder of joint opening under sealant.

2.06. PRIMERS

A. Primers: Product recommended by joint-sealant manufacturer where required for adhesion of sealant to joint substrates indicated, as determined from preconstruction joint-sealant-substrate tests and field tests.

PART 3 EXECUTION

3.01. EXAMINATION

A. Examine joints indicated to receive joint sealants, with Installer present, for compliance with requirements for joint configuration, installation tolerances, and other conditions affecting joint-sealant performance.

B. Proceed with installation only after unsatisfactory conditions have been corrected.

3.02. PREPARATION

A. Surface Cleaning of Joints: Clean out joints immediately before installing joint sealants to comply with joint-sealant manufacturer's written instructions.

B. Joint Priming: Prime joint substrates where indicated or where recommended in writing by joint-sealant manufacturer, based on preconstruction joint-sealant-substrate tests or prior experience. Apply primer to comply with joint-sealant manufacturer's written instructions. Confine primers to areas of joint-sealant bond; do not allow spillage or migration onto adjoining surfaces.

3.03. INSTALLATION OF JOINT SEALANTS

A. General: Comply with joint-sealant manufacturer's written installation instructions for products and applications indicated unless more stringent requirements apply.

B. Joint-Sealant Installation Standard: Comply with recommendations in ASTM C 1193 for use of joint sealants as applicable to materials, applications, and conditions indicated.

C. Install joint-sealant backings of kind indicated to support joint sealants during application and at position required to produce cross-sectional shapes and depths of installed sealants relative to joint widths that allow optimum sealant movement capability.

1. Do not leave gaps between ends of joint-sealant backings.
2. Do not stretch, twist, puncture, or tear joint-sealant backings.
3. Remove absorbent joint-sealant backings that have become wet before sealant application and replace them with dry materials.

D. Install joint sealants using proven techniques that comply with the following and at the same time backings are installed:

1. Place joint sealants so they directly contact and fully wet joint substrates.
2. Completely fill recesses in each joint configuration.
3. Produce uniform, cross-sectional shapes and depths relative to joint widths that allow optimum sealant movement capability.

E. Tooling of Non-sag Joint Sealants: Immediately after joint-sealant application and before skinning or curing begins, tool sealants according to the following requirements to form smooth, uniform beads of configuration indicated; to eliminate air pockets; and to ensure contact and adhesion of sealant with sides of joint:

1. Remove excess joint sealant from surfaces adjacent to joints.
2. Use tooling agents that are approved in writing by joint-sealant manufacturer and that do not discolor sealants or adjacent surfaces.

F. Provide joint configuration to comply with joint-sealant manufacturer's written instructions unless otherwise indicated.

3.04. CLEANING

A. Clean off excess joint sealant or sealant smears adjacent to joints as the Work progresses, by methods and with cleaning materials approved in writing by manufacturers of joint sealants and of products in which joints occur.

3.05. PROTECTION

A. Protect joint sealants, during and after curing period, from contact with contaminating substances and from damage resulting from construction operations or other causes so sealants are without deterioration or damage at time of Substantial Completion. If, despite such protection, damage or deterioration occurs, cut out and remove damaged or deteriorated joint sealants immediately and replace with joint sealant so installations in repaired areas are indistinguishable from the original work.

3.06. PAVEMENT JOINT SEALANT SCHEDULE

A. Joint-Sealant Application: Joints within cement concrete pavement.

1. Joint Location:
    a. Expansion and isolation joints in cast-in-place concrete pavement.
    b. Contraction joints in cast-in-place concrete slabs.
    c. Other joints as indicated.
2. Silicone Joint Sealant for Concrete: Single component, non-sag; Single component, self-leveling.
3. Urethane Joint Sealant for Concrete: Multicomponent, pourable, traffic-grade.
4. Hot-Applied Joint Sealant for Concrete: Single component.

B. Joint-Sealant Application: Joints between cement concrete and asphalt pavement.

1. Joint Location:
    a. Joints between concrete and asphalt pavement.
    b. Joints between concrete curbs and asphalt pavement.
    c. Other joints as indicated.
2. Hot-Applied Joint Sealant for Concrete and Asphalt: Single component.

END OF SECTION 32 1373

SECTION 32 1613

CURBS AND GUTTERS

PART 1 GENERAL

1.01 RELATED DOCUMENTS

A. Drawings and general provisions of the Contract, including General and Supplementary Conditions and Division 01 Specification Sections, apply to this Section.

1.02 SUMMARY

A. The work under this section of the Specifications includes all labor, materials, equipment, and services necessary for CURBS AND GUTTERS as shown on the Drawings and herein specified and in accordance with the Contract Documents. All costs for labor, materials, equipment, and services necessary for CURBS AND GUTTERS shall be included in the bid prices for the work.

1.03 SECTION INCLUDES

A. Cast-In-Place Concrete Curb and Gutters

1.04 RELATED SECTIONS

A. 31 2300 Excavation and Fill
B. 31 2500 Erosion and Sedimentation Controls
C. 32 1300 Rigid Paving
D. 32 1373 Concrete Paving Joint Sealants

1.05 DEFINITIONS

A. AHJ – Authority Having Jurisdiction

1. City of Tahlequah

1.06 ACTION SUBMITTALS

A. Design Mixtures: For each concrete paving mixture. Include alternate design mixtures when characteristics of materials, Project conditions, weather, test results, or other circumstances warrant adjustments.

1.07 INFORMATIONAL SUBMITTALS

A. Material Certificates: For the following, from manufacturer:

1. Cementitious materials.
2. Steel reinforcement and reinforcement accessories.
3. Applied finish materials.
4. Bonding agent or epoxy adhesive.
5. Joint fillers.

B. Material Test Reports: For each of the following:

1. Aggregates. Include service-record data indicating absence of deleterious expansion of concrete due to alkali-aggregate reactivity.

1.08 QUALITY ASSURANCE

A. Ready-Mix-Concrete Manufacturer Qualifications: A firm experienced in manufacturing ready-mixed concrete products and that complies with ASTM C 94 requirements for production facilities and equipment.

1. Manufacturer certified according to NRMCA's "Certification of Ready Mixed Concrete Production Facilities" (Quality Control Manual - Section 3, "Plant Certification Checklist").

B. Concrete Testing Service: Engage a qualified testing agency to perform material evaluation tests and to design concrete mixtures.

C. ACI Publications: Comply with ACI 301 unless otherwise indicated.

D. Preconstruction Conference

1. Conduct a preconstruction conference. Subcontractors that will be performing the work shall attend the preconstruction conference. Notify ENGINEER one week (7 days) prior to the date of the meeting.
2. Review methods and procedures related to concrete paving, including but not limited to, the following:
    a. Concrete mixture design.
    b. Quality control of concrete materials and concrete paving construction practices.
3. Require representatives of each entity directly concerned with concrete paving to attend, including the following:
    a. Contractor's superintendent.
    b. Independent testing agency responsible for concrete design mixtures.
    c. Ready-mix concrete manufacturer.
    d. Concrete paving subcontractor.

E. Regulatory Requirements

1. All materials and methods shall comply with the requirements of the AHJ.
2. If the AHJ has not adopted specifications for materials and methods, the Oklahoma Department of Transportation’s 2009 Specifications shall be used.

1.09 PERMITS

A. CONTRACTOR shall make application; pay permit fees; provide payment and performance bonds required of the CONTRACTOR by the AHJ.

1.10 TOPOGRAPHIC SURVEY

A. OWNER has or will perform a survey of the site, stake the property limits, and provide a reference benchmark elevation.

1.11 CONSTRUCTION CONTROL

A. Do not commence work until temporary erosion and sedimentation control measures are in place.

B. CONTRACTOR shall be responsible for properly laying out the work, and for lines and measurements for the work executed under the Contract Documents. Verify the figures shown on the Drawings before ordering any materials and laying out the work, and report errors or inaccuracies in writing to the ENGINEER before commencing work. The ENGINEER or his representative will in no case assume the responsibility for laying out the work.

C. Existing survey points other than those shown on the Drawings shall not be considered as acceptable control points unless approved by the ENGINEER. If approval is secured, CONTRACTOR remains responsible for maintaining them and for their accuracy. Be responsible for preserving all existing iron or metal, and all concrete survey points or monuments for the construction period.

1.12 PROJECT CONDTIONS

A. TRAFFIC

1. A Work Zone Permit must be obtained from the AHJ at least two (2) working days prior to the start of work and/or placing or removing any barricades or modifying existing traffic control devices.
2. CONTRACTOR shall be responsible for erecting and maintaining barricades and other traffic warning devices as necessary around the perimeter of construction and adjacent to any open trenches. Provide and maintain adequate detours around the work under construction. Provide sufficient lights, warning signs, and watchmen for the safety of the public.
3. Any temporary street closure shall be coordinated with and approved by the AHJ. CONTRACTOR shall establish all detour routes while streets are closed during construction. CONTRACTOR shall notify Fire, Police, and EMSA headquarters when any street is temporarily closed.
4. CONTRACTOR is responsible for the prompt replacement and/or repair of all traffic control devices and appurtenances damaged or disturbed due to construction. Any existing traffic signals, signal loops, conduits, cables, and other traffic control devices affected by the work shall be reset or replaced according to AHJ's specifications. Coordinate the work with the AHJ's traffic department.

PART 2 PRODUCTS

2.01 ADOPTED PRODUCT REQUIRMENTS

A. All materials and products shall comply with the Oklahoma Department of Transportation's 2009 Specifications.

2.02 CONCRETE

A. Class A PC Concrete (4,000 psi at 28 days, air entrained) shall be used for concrete curbs and gutters.

2.03 FORMS

A. Form Materials: Plywood, metal, metal-framed plywood, or other approved panel-type materials to provide full-depth, continuous, straight, and smooth exposed surfaces.
B. Use flexible or uniformly curved forms for curves with a radius of 100 feet or less. Do not use notched and bent forms.
C. Form-Release Agent: Commercially formulated form-release agent that will not bond with, stain, or adversely affect concrete surfaces and that will not impair subsequent treatments of concrete surfaces.

2.04 STEEL REINFORCEMENT

A. Bar Steel Reinforcement – Billet Steel

1. Provide plain or deformed billet steel bars for concrete reinforcement and dowels in accordance with AASHTO M 31, Grade 60, except provide deformed billet steel bars for bent tie bars used in concrete paving in accordance with AASHTO M 31, Grade 40.

B. Welded Steel Wire Fabric

1. Provide cold drawn steel wire fabric for concrete reinforcement in accordance with AASHTO M 55 or AASHTO M 221.
2. Provide reinforcing fabric in flat sheets or rolls. Straighten bent or distorted materials before use. Ensure the fabric is free of excessive rust, scale, or coating that may impair the concrete bond.

C. Cold Drawn Steel Wire

1. Provide cold drawn steel wire, in accordance with AASHTO M 32, for spiral ties and other reinforcing shown on the Plans as “W” (Wire) sizes.

D. Epoxy Coated Reinforcing Bars

1. Provide epoxy coated (an electro-statically applied organic coating) reinforcing bars and epoxy coating material in accordance with AASHTO M 285, except the following:
   a. Provide reinforcing steel bars in accordance with Bar Steel Reinforcement – Billet Steel.
   b. Provide finished epoxy coating in a color and tone that easily gives visual indications of damage or corrosion staining.

E. Tie Bars

1. ASTM A 615, Grade 60, deformed.

F. Hook Bolts

1. ASTM A 307, Grade A, internally and externally threaded. Design hook-bolt joint assembly to hold coupling against paving form and in position during concreting operations, and to permit removal without damage to concrete or hook bolt.

G. Bar Supports

1. Bolsters, chairs, spacers, and other devices for spacing, supporting, and fastening reinforcing bars, welded wire reinforcement, and dowels in place. Manufacture bar supports according to CRSI's "Manual of Standard Practice" from steel wire, plastic, or precast concrete of greater compressive strength than concrete specified, and as follows:
   a. Equip wire bar supports with sand plates or horizontal runners where base material will not support chair legs.
   b. For epoxy-coated reinforcement, use epoxy-coated or other dielectric-polymer-coated wire bar supports.

2.05 CURING MATERIALS

A. Absorptive Cover: AASHTO M 182, Class 3, burlap cloth made from jute or kenaf, weighing approximately 9 oz./sq. yd. dry or cotton mats.
B. Moisture-Retaining Cover: ASTM C 171, polyethylene film or white burlap-polyethylene sheet.
C. Water: Potable.
D. Evaporation Retarder: Waterborne, monomolecular, film forming, manufactured for application to fresh concrete.
E. Clear, Waterborne, Membrane-Forming Curing Compound: ASTM C 309, Type 1, Class B, dissipating.
F. White, Waterborne, Membrane-Forming Curing Compound: ASTM C 309, Type 2, Class B, dissipating.

PART 3 EXECUTION

3.01 ADOPTED PLACEMENT REQUIREMENTS

A. The placement of CONCRETE CURBS AND GUTTERS shall comply with the Oklahoma Department of Transportation’s 2009 Specifications.

3.02 EARTHWORK AND BASE COURSE

A. Perform earthwork according to 31 2300 Excavation and Fill.
B. Provide base course according to 32 1100 Base Courses.

3.03 JOINTS

A. Expansion Joints - Set 1/2 inch expansion joints at maximum 100 ft spacing using 1/2 inch by 4-inch pre-molded expansion joint material.
B. Contraction Joints – Set contraction joints at 15 ft to 20 ft spacing.
C. Fill all joints to surface with silicone sealant.

3.04 TOLERANCES

A. Comply with tolerances in Oklahoma Department of Transportation's 2009 Specifications and as follows:

1. Elevation: 3/4 inch.
2. Thickness: Plus 3/8 inch, minus 1/4 inch.
3. Surface: Gap below 10-foot unleveled straightedge not to exceed 1/2 inch.
4. Joint Spacing: 3 inches.
5. Contraction Joint Depth: Plus 1/4 inch, no minus.
6. Joint Width: Plus 1/8 inch, no minus.

3.05 FIELD QUALITY CONTROL

A. Engage a qualified testing agency to perform tests and inspections.
B. Testing of composite samples of fresh concrete obtained according to ASTM C 172 shall be performed according to the following requirements:

1. Testing Frequency: Obtain at least one composite sample for each 100 cu.yd. or fraction thereof of each concrete mixture placed each day.
    a. When frequency of testing will provide fewer than five compressive-strength tests for each concrete mixture, testing shall be conducted from at least five randomly selected batches or from each batch if fewer than five are used.

C. Slump: ASTM C 143; one test at point of placement for each composite sample, but not less than one test for each day's pour of each concrete mixture. Perform additional tests when concrete consistency appears to change.
D. Air Content: ASTM C 231, pressure method; one test for each composite sample, but not less than one test for each day's pour of each concrete mixture.
E. Concrete Temperature: ASTM C 1064; one test hourly when air temperature is 40 deg F and below and when it is 80 deg F and above, and one test for each composite sample.
F. Compression Test Specimens: ASTM C 31; cast and laboratory cure one set of three standard cylinder specimens for each composite sample.
G. Compressive-Strength Tests: ASTM C 39; test one specimen at seven days and two specimens at 28 days.

1. A compressive-strength test shall be the average compressive strength from two specimens obtained from same composite sample and tested at 28 days.

H. Strength of each concrete mixture will be satisfactory if average of any three consecutive compressive-strength tests equals or exceeds specified compressive strength and no compressive-strength test value falls below specified compressive strength by more than 500 psi.
I. Test results shall be reported in writing to Architect, concrete manufacturer, and Contractor within 48 hours of testing. Reports of compressive-strength tests shall contain Project identification name and number, date of concrete placement, name of concrete testing and inspecting agency, location of concrete batch in Work, design compressive strength at 28 days, concrete mixture proportions and materials, compressive breaking strength, and type of break for both 7- and 28-day tests.

J. Nondestructive Testing: Impact hammer, sonoscope, or other nondestructive device may be permitted by Architect but will not be used as sole basis for approval or rejection of concrete.

K. Additional Tests: Testing and inspecting agency shall make additional tests of concrete when test results indicate that slump, air entrainment, compressive strengths, or other requirements have not been met, as directed by Architect.

L. Concrete paving will be considered defective if it does not pass tests and inspections.

M. Additional testing and inspecting, at Contractor's expense, will be performed to determine compliance of replaced or additional work with specified requirements.

N. Prepare test and inspection reports.

3.06 REPAIRS AND PROTECTION

A. Remove and replace concrete paving that is broken, damaged, or defective or that does not comply with requirements in this Section. Remove work in complete sections from joint to joint unless otherwise approved by Architect.

B. Protect concrete paving from damage. Exclude traffic from paving for at least 14 days after placement. When construction traffic is permitted, maintain paving as clean as possible by removing surface stains and spillage of materials as they occur.

C. Maintain concrete paving free of stains, discoloration, dirt, and other foreign material. Sweep paving not more than two days before date scheduled for Substantial Completion inspections.

END OF SECTION 32 1613

SECTION 33 1000

WATER UTILITIES

PART 1 - GENERAL

1.01 RELATED DOCUMENTS

A. Drawings and general provisions of the Contract, including General and Supplementary Conditions and Division 01 Specification Sections, apply to this Section.

1.02 SUMMARY

A. The work under this section of the Specifications includes all labor, materials, equipment, and services necessary for WATER UTILITIES as shown on the Drawings and herein specified and in accordance with the Contract Documents. All costs for labor, materials, equipment, and services necessary for WATER UTILITIES shall be included in the bid prices for the work.

1.03 SECTION INCLUDES

A. Water Utilities Distribution Piping
B. Water Distribution Equipment
C. Disinfection of Water Utility Distribution

1.04 RELATED SECTIONS

A. 31 2300 Excavation and Fill
B. 31 2500 Erosion and Sedimentation Controls

1.05 DEFINITIONS

A. AHJ – Authority Having Jurisdiction

1. City of Tahlequah
2. Oklahoma Department of Environmental Quality

1.06 ACTION SUBMITTALS

A. Product Data: For each type of product indicated.

1. Pipe
2. Valves
3. Fire Hydrants
4. Fittings
5. Steel Casing
6. Mechanical Joint Restraints
7. Meters
8. Tracer Wire
9. Manholes, Vaults, and Covers

B. Field quality-control test reports.

1.07 INFORMATIONAL SUBMITTALS

A. Photograph, video, or both the existing trees and plantings, adjoining construction, roadways, utilities, and site improvements to establish preconstruction conditions. Identify preexisting damage to trees, plantings, adjoining construction, pavements, sidewalks, and other site improvements. Include plans and notations to identify and describe any such conditions.

1.08 DELIVERY, STORAGE, AND HANDLING

1.09 QUALITY ASSURANCE

A. PRECONSTRUCTION CONFERENCE

1. Conduct a preconstruction conference. Subcontractors that will be performing the work shall attend the preconstruction conference. Notify ENGINEER one week (7 days) prior to the date of the meeting.

B. REGULATORY REQUIREMENTS

1. All materials and methods shall comply with the requirements of the AHJ.
2. If the AHJ has not adopted specifications for materials and methods, the current edition of the City of Oklahoma City's Standard Specifications for Construction of Public Improvements shall be used.

1.10 PERMITS

A. CONTRACTOR shall make application; pay permit fees; provide payment and performance bonds required of the CONTRACTOR by the AHJ.

1.11 TOPOGRAPHIC SURVEY

A. OWNER has or will perform a survey of the site, stake the property limits, and provide a reference benchmark elevation.

1.12 UNDERGROUND UTILITIES

A. CONTRACTOR shall contact OKIE (811 or 1-800-522-OKIE) prior to construction for locating existing utilities.

B. The underground utilities shown on the Drawings have been located from field survey surface information and existing drawings. ENGINEER and Surveyor make no guarantee that the underground utilities shown comprise all such utilities in the area, either in service or abandoned. The underground utilities are located as accurately as possible from information available; however, ENGINEER and Surveyor further do not guarantee that the underground utilities shown are in the exact location indicated either vertically or horizontally. ENGINEER and Surveyor have not physically located the underground utilities by probing, excavating, hydrovac, or by any other means.

C. CONTRACTOR shall notify all utility companies and governmental agencies who may have utility lines on or about the premises or who may be affected by the construction. Notice shall be given no less than twenty-four hours prior to any work that may interfere with a utility.

D. All existing structures, improvement and utilities designated to remain shall be adequately protected from damage that might otherwise occur due to construction operations. Where construction comes in close proximity to existing structures, utilities or appurtenances, or if it becomes necessary to move services, poles, guy wires, pipe lines or other obstructions, CONTRACTOR shall notify and cooperate with the owner of the utility, structure, or appurtenance. The utility lines and other existing structures shown on the plans are for information only and are not guaranteed to be complete or accurate as to location and/or depth. CONTRACTOR shall be liable for damage to any utilities resulting from the CONTRACTOR's operations. During construction, all fire hydrants, valve boxes, fire or police call boxes and other existing utility controls shall be left intact, unobstructed and accessible unless noted on the plan.

E. Contractor shall satisfy themselves as to the actual existing subsurface conditions, including but not limited to the depth, location and sizes of pipe or conduits of various kinds in place prior to beginning work. Where the exact depth of any utility or obstruction is not shown on a plan, excavation shall be made prior to reaching the obstruction in order

to determine adjustments in grade if needed to prevent interference. Redesign to eliminate conflicts may be necessary.

1.13 CONSTRUCTION CONTROL

A. Do not commence work until temporary erosion and sedimentation control measures are in place.

B. CONTRACTOR shall be responsible for properly laying out the work, and for lines and measurements for the work executed under the Contract Documents. Verify the figures shown on the Drawings before ordering any materials and laying out the work, and report errors or inaccuracies in writing to the ENGINEER before commencing work. The ENGINEER or his representative will in no case assume the responsibility for laying out the work.

C. Existing survey points other than those shown on the Drawings shall not be considered as acceptable control points unless approved by the ENGINEER. If approval is secured, CONTRACTOR remains responsible for maintaining them and for their accuracy. Be responsible for preserving all existing iron or metal, and all concrete survey points or monuments for the construction period.

1.14 PROJECT CONDTIONS

A. TRAFFIC

1. Obtain any required Work Zone Permits from the AHJ at least two (2) working days prior to the start of work and/or placing or removing any barricades or modifying existing traffic control devices.
2. CONTRACTOR shall be responsible for erecting and maintaining barricades and other traffic warning devices as necessary around the perimeter of construction and adjacent to any open trenches. Provide and maintain adequate detours around the work under construction. Provide sufficient lights, warning signs, and watchmen for the safety of the public.
3. Any temporary street closure shall be coordinated with and approved by the AHJ. CONTRACTOR shall establish all detour routes while streets are closed during construction. CONTRACTOR shall notify Fire, Police, and EMSA headquarters when any street is temporarily closed.
4. CONTRACTOR is responsible for the prompt replacement and/or repair of all traffic control devices and appurtenances damaged or disturbed due to construction. Any existing traffic signals, signal loops, conduits, cables, and other traffic control devices affected by the work shall be reset or replaced according to AHJ's specifications. Coordinate the work with the AHJ's traffic department.

B. UTILITY INTERRUPTIONS

1. Do not interrupt any utility serving facilities occupied by Owner or others unless permitted by OWNER and the owner(s) of the utility. Temporary utility service shall be provided for any interruption. Notify OWNER and ENGINEER one week (7 days) in advance of proposed interruption of utility.

C. SUBSURFACE CONDITIONS

1. A geotechnical report has been prepared for this Project and is available for information only. The opinions expressed in this report are those of geotechnical engineer and represent interpretations of subsoil conditions, tests, and results of analyses conducted by geotechnical engineer. Owner will not be responsible for interpretations or conclusions drawn from the data.

D. EXCAVATION AND TRENCH SAFETY SYSTEMS

1. CONTRACTOR shall be responsible for complying with State laws and Federal regulations relating to excavation and trench safety, including those which may be enacted during the performance under this Contract. CONTRACTOR is advised that Federal Regulations 29 C.F.R. 1926.650-1926.652 have been, in their most recent version as amended, in effect since January 2, 1990. CONTRACTOR shall fully comply with the U.S. Department of Labor Occupational Safety and Health Administration (OSHA) regulations pertaining to excavations, trenching, and shoring and shall provide and familiarize its employees involved in excavation and trenching with the provisions in OSHA Pamphlet Number 2226, Excavating and Trenching Operations.

1.15 HAZARDOUS CONDITIONS

A. If CONTRACTOR encounters a Hazardous Environmental Condition or if CONTRACTOR or anyone for whom CONTRACTOR is responsible creates a Hazardous Environmental Condition, CONTRACTOR shall immediately: (i) secure or otherwise isolate such condition; (ii) stop all Work in connection with such condition and in any area affected thereby (except in an emergency); and (iii) notify OWNER and ENGINEER (and promptly thereafter confirm such notice in writing). OWNER shall promptly consult with ENGINEER concerning the necessity for OWNER to retain a qualified expert to evaluate such condition or take corrective action, if any.

PART 2 - PRODUCTS

2.01 ADOPTED PRODUCT REQUIRMENTS

A. All materials and products shall comply with the current edition of the AHJ's Standard Specifications for Construction of Public Improvements.

B. All materials and products shall comply with the Oklahoma Administrative Code, Title 252, Chapter 625 titled "Public Water Supply Construction Standards".

2.02 PIPE

A. Ductile Iron Pipe

1. All pipe shall conform to ANSI Specification A21.51; AWWA Specification C 151, and cement lining in accordance with ANSI Specification A21.4 and AWWA Specification C104. Pipe shall be pressure rated at 350 psi with surge allowance of 100 psi, with pipe thickness to conform with depth of cover and laying conditions.

B. PVC Pressure Pipe

1. Materials used to produce the pipe, couplings, and fittings shall be manufactured in accordance with ASTM D-2241, ASTM D-3139, Commercial Standard CS 256, and approved by the National Sanitation Foundation (NSF). The pipe shall be made from clean, virgin, class 12454-B PVC compound conforming to ASTM Resin Specifications D-1784 Type 1, Grade 1. Standard joint length shall be twenty (20) feet. The pipe shall have a minimum Standard Dimension Ratio (SDR) of 21 for class 200 psi. The pipe shall be marked continuously along the length with: Manufacturer's name, nominal size, class pressure rating, PVC 1120, NSF, and identification code. Pipe certification sheets shall be submitted by the manufacturer to show compliance with these specifications as requested by the Engineer.

2.03 FITTINGS

A. Fittings for all pipe 4" or larger shall be standard mechanical joint ductile iron unless otherwise indicated on the plans or noted by details. Ductile Iron Fittings shall conform to ANSI Specifications A21.I0 and A21.11 and AWWA Specification C110.

B. Fittings shall be manufactured in accordance with ANSI Specification A21.4 and AWWA Specification C104 and shall be furnished with a complete set of joint materials for each socket opening.

2.04 JOINTS

A. Mechanical joints shall conform to and be tested in accordance with ANSI Specification A21.11 and AWWA Specification C111.

B. Restrained joints, when necessitated by the conditions of construction as determined

C. by the Engineer, shall be used with or without thrust blocking for pipe joints adjacent to fittings, bends and terminal points as well as fitting joints or where utilized in ANSI Specification A21.10 and with A21.11. Joint restraints at Fire Hydrants shall conform to ASTM A307. Specified restraints shall be MIDCO's PERMA-GRIP Mechanical restrained Fittings for Class 200, SDR-21 PVC pipe or Model 1300 Uniflange Pipe restraints by Standard International and MEGALUG joint restraint by EBAA Iron Sales.

D. Flanged joints shall be used if indicated and shall conform to ANSI Specification A21.15 and AWWA Specification C115 for 125 pounds flange with appropriate bolts per standard ASA specifications for each flange size.

2.05 PVC PIPE COUPLINGS

A. Couplings including bell ends, shall be Ring-Tite, Bell Ring, or Push Joint connected, with fittings furnished by the pipe manufacturer and certified to be suitable for use with the pipe furnished. They shall have a minimum pressure rating of 200 psi and be constructed with deep sockets.

2.06 GATE VALVES

A. Specified gate valves shall be manufactured by AVK. All Gate Valves shall conform to, and be tested in accordance with, the AWWA Standard for Resilient Seated Gate Valves, for water and sewage systems, ANSI/AWWA Specification C509. Valves shall be bubble tight from either direction at a rated design working pressure of 200 psi. Valves shall have a single disc gate with synthetic rubber seat bonded or mechanically attached to the disc; a non-rising stem with 2" AWWA operating nut; opening counter clockwise with "O" ring stern seals. Valve interiors shall have a corrosion resistant coating acceptable for potable water and end connection to fit the pipe or connection to which it is attached. Valves installed with stems placed at depths greater than 36-inches shall have extensions attached to the operating nut as part of the valve component. Each valve shall have the maker's name or initials, pressure rating and year of manufacture cast on the body and shall be furnished complete with set of joint materials for each socket.

2.07 TAPPING SLEEVES & VALVES

A. Tapping sleeves and valves shall be furnished and installed in sizes indicated on connections to existing lines. Tapping sleeves manufactured by SMITH BLAIR or FORD are acceptable. The valves shall be Flange by Mechanical Joint Resilient Seat conforming with applicable provisions of AWWA C509.

2.08 VALVE BOXES

A. Valve boxes shall be of the cast iron extension type with screw or slide adjustment and flared base. The minimum thickness of the metal shall be 3/16 inch. The word WATER shall be cast in the cover. The boxes shall be of such length as will be adapted to the depth of cover over the pipe at the valve location, with bottom section, extension pieces, and

top section as needed. All installed valve boxes shall have a minimum 24"x 24" x 6" thick concrete pad set in place around the valve box for location and protection of the box.

2.09 VALVE & LINE MARKERS

A. Identification markers shall be of metal fabrication with baked enamel finish noting the OWNER, and type of facility identified. Marker must be at least 80 square inches in area and shall have attachments to be firmly secured to a galvanized rod or post five (5) feet in length for erection at the location needed.

2.10 STEEL PIPE CASING

A. All steel pipe casing shall be new or used smooth walled, welding steel pipe. The pipe shall be straight, round, and sound with no dents or splits and shall have a standard wall thickness as noted:

1. 18" Pipe ..... 0.375" Minimum Thickness
2. 12" Pipe ..... 0.330" Minimum Thickness
3. 10" Pipe ..... 0.307" Minimum Thickness
4. 8" Pipe ..... 0.277" Minimum Thickness

B. Pipe shall be delivered in lengths that will best fit the crossings as noted in the plans with a minimum number of joints to be welded. Pipe shall be subject to adequate inspection before, during, and after unloading of pipe at the job site and owner reserves the right to reject any and all pipe not in satisfactory conformance with this specification.

C. Spacers used between casing and pipe shall be as shown on the plans or as manufactured by RACI Spacers, Inc., Tulsa; M-2 THINsulator by T. D. Williamson, Inc., Tulsa; or APS Casing Spacers by Advance Prod. & Systems, Inc., Lafayette, La.

2.11 FIRE & FLUSHING HYDRANTS

A. Fire Hydrants shall be AVK and shall conform to and be tested in accordance with the AWWA Standard for Dry-Barrel Fire Hydrants, AWWA C502. Fire Hydrants shall have a 5¼-inch compression main valve; 6-inch inlet connection; mechanical joint hub; bury length as specified on the plans; two 2½-inch hose nozzles with TAHLEQUAH (e.g. Mueller 301 threads are Tahlequah threads) THREADS; one 4½-inch pumper nozzle with National Standard threads (CHECK WITH FIRE DEPARTMENT); and Safety Red finish paint above ground line. Flushing Hydrant shall have a 2¼-inch main valve opening with one 2½-inch hose nozzle with TAHLEQUAH THREADS and Safety Red finish paint above ground line. All other specifications shall meet the model requirements and sizes including a 10-year guarantee.

2.12 AIR RELEASE VALVES

A. Air Release Valves shall be installed at the locations shown on the plans, or as directed by the Engineer. Valve shall be a heavy-duty air release type for 150 psi working pressure, tested to 300 psi, size shown on plans. Body, cover, and baffle shall be cast iron. All internal parts to be stainless steel and/or bronze, and the inside valve coated with rust inhibitor as manufactured by Val-Matic, or an approved equal. Tapping saddle shall be CLOW, twin seal brass saddle and corporation stop with IP threads on outlet piping connection. Valve and piping connection shall be offset from the main line and properly supported to avoid stresses on piping connections. The valve discharge will have open end piping extended with a screened downward facing elbow. Valve to be place in a 24”-meter box and lid with keyed locking mechanism and lettering as approved by the Engineer. Use tapping sleeve Spec.

2.13 TRACER WIRE

A. 12-gauge tracer wire for the location of PVC water lines shall be required in all trenched areas of construction. The wire shall be attached to the water line and shall be brought to the surface and attached at all valve and meter boxes and any other appurtenance where the wire can be accessed.

2.14 CAST-IN-PLACE CONCRETE

A. Concrete used for capping channel crossings, road crossings, and thrust blocking shall use as and included by reference herein ACI 301 Concrete Standard Specifications for Concrete for Building in its entirety. All concrete shall be mixed and proportioned as a six sack per yard mix to give good workability with a maximum slump of 4-inches. Concrete shall show a compressive strength of 3500 psi at 28 days when tested. All crossing pours shall be vibrated to reduce voids, honeycombing, or defects. Concrete shall not be placed when the outside air temperature is 40° F or under and falling, except with the approval of the Engineer. All concrete will be placed against undisturbed earth or compacted bedding with all exposed concrete leveled and broomed to achieve a smooth brushed finish and all blocking placed so that pipe and fittings will be accessible for repair or Polyethylene wrapped. Concrete thrust blocking for all pipe fittings shall be provided to sufficiently support the fitting from movement.

PART 3 - EXECUTION

3.01 ADOPTED PLACEMENT REQUIREMENTS

A. The installation of WATER UTILITIES shall comply with the current edition of the AHJ's Standard Specifications for Construction of Public Improvements.

3.02 PROTECTION OF SERVICE & LATERAL LINES

A. The location of utility service lines and sewer system lateral lines serving individual properties or other utilities mayor may not be shown on the plans. The CONTRACTOR shall assume that such service lines exist whether or not they are shown on the plans, and it shall be the responsibility of the Contractor to make any necessary changes in the line and/or grade of such services, or to secure the necessary changes therein to be made by the particular utility company involved or other owner thereof. Contractor shall pay the cost of all such revisions whether performed by the Contractor, the utility company, or other owner. In the event of interruption of a utility service as a result of accidental breakage, the Contractor shall promptly notify the owner of the utility, and shall repair or have repaired, in the same manner as necessary changes above provided for, and the Contractor shall do all things necessary to see the restoration of services as promptly as may be reasonably done.

3.03 GENERAL INSTALLATION DETAILS

A. All material for the project shall be transported, delivered, and stored in a manner to prevent damage to the materials. All damaged, broken or otherwise defective materials will be rejected. Store lubricants, gaskets, jointing materials, and other packaged materials in a dry, protected area in which the manufacturer's name and all other applicable data is plainly marked and visible.

B. Pipe shall be delivered to the job site by means which will adequately support it, and not subject it to undue stresses. The load shall be so supported that bottom rows of pipe are not damaged by crushing. Pipe shall be stored and protected and shall not be strung along the line of trenching more than two days prior to placing. The trench wall shall be straight with a minimum trench width of eight (8) inches or three (3) times the pipe diameter, whichever is greater, at the grade line with the upper portion of the trench sloped to prevent cave-in or collapse of the trench. The bottom of the trench shall be finished to

provide a uniform bearing for the pipe. Changes in grade in the trench bottom shall be made as shown on the drawings so the pipe will rest on the trench bottom. Where smaller radius of curvature than that recommended by the pipe manufacturer is required to fit the trench bottom, suitable elbows shall be used. Concrete thrust blocking shall be installed at all points of lateral thrust such as tees, elbows, etc., unless restraining connections are used as approved by the Water Department Superintendent. The pipe is to be laid in a trench having a six (6) inch bed of select material prepared before the pipe is lowered into the trench. Backfilling shall be carefully placed to avoid dropping rocks or large clods on the pipe. All backfill within eight (8) inches of the edges of the pipe shall contain no stones. Underground crossover piping shall provide a minimum clearance of twenty-four (24) inches between bottom of existing pipe and top of new pipe unless conditions restrict such clearance.

1. Sand, pea gravel, or crushed stone shall be used as bedding around the pipe, (6) inches below, and twelve (12) inches over the pipe as standard trench bedding. All pipe installed shall have a minimum cover over the top of the pipe of thirty-six (36) inches except where otherwise specified or approved by the Engineer. Where ledge or solid rock is encountered at this depth the pipe may be raised to a minimum depth of thirty (30) inches cover over the top of pipe.

C. The Contractor shall replace all street and paved surfaces as soon as possible after the pipe has been backfilled. Concrete, asphalt and gravel streets, parking lots, and driveways shall be cut in straight lines a minimum of twelve (12) inches on undisturbed soil from the excavated area and replaced with concrete or material in kind to a minimum thickness of eight (8) inches for streets and six (6) inches for driveways and parking lots. Any pavement or other surfaces of streets, roads, driveways, or walks which are removed or damaged whether or not within the trench or excavated limits shall be replaced or repaired to its original or better condition. Backfill above the specified pipe embedment will require compaction to 95% standard density under these surfaces. All other compaction will be of a character that will be reasonable free from settlement. Wherever trenches have not been properly filled or where settlement has occurred at any time prior to final acceptance of the entire work covered by this contract, to the extent that the top of the backfill is below the original ground surface, such trenches shall be refilled and backfill surface compacted and smoothed to conform to the elevation of the adjacent ground surface.

D. Trench backfill shall proceed immediately behind the pipe laying to avoid leaving open ditches overnight. Any excavation which remains open overnight shall be properly barricaded and lighted to avoid any injury to persons or property. When work is stopped at night or for any other reason, water tight plugs shall be used to prevent excavated material, water, and small animals from entering the pipe.

E. Where the Contractor encounters water or the trench soil becomes mucky or in such condition that the bedding cannot be graded properly or support the pipe, then the Contractor shall excavate below the sub-grade sufficiently to allow for a gravel sub-grade bedding to be placed. Pumps shall be installed and operated to allow the water level to be drawn down below the bottom of the pipe. The Contractor shall install trench bracing where protection of his employees and the work is necessary and required by safety codes.

3.04 FIELD QUALITY CONTROL

A. FLUSHING

1. Waterlines shall be flushed clean prior to start of pressure testing or disinfection processes. The waterlines will be flushed again after disinfection of the lines to rid the lines of excessive chlorinated water. The duration of flushing shall be

adequate to accomplish successful cleaning and removal of excessive chlorine in the lines. The engineer has the authority to require additional flushing of the line to accomplish cleaning or removal of excessive chlorine.

B. HYDROSTATIC PRESSURE TESTS

1. All pipelines shall be tested by means of hydrostatic pressure of not less than the pressure rating of the pipe. If test plugs are used, they shall be furnished and installed by the Contractor at his own expense, together with all necessary anchors, braces and other devices necessary to withstand the hydrostatic pressure on such plug or plugs without placing any hydraulic thrust on the pipe line or any part thereof. The Contractor shall be solely responsible for any and all damage to the pipe line and public and private property which might be caused by the failure of such test plugs or supports incidental thereto. The allowable leakage is 10 gallons per inch of pipe diameter per mile of pipe per 24 hours.
2. After the section of line to be tested has been filled with water, the specified test pressure shall be applied by means of a force pump of such design and capacity that such pressure can be applied and maintained for the duration of the test period, which shall be not less than two (2) hours for 24" and smaller pipe; and not less than six (6) hours for 30" and larger diameter pipe.
3. All water supplied to the line after the initial filling thereof shall be metered by means of a tested water meter approved by the Engineer.
4. Any and all leaks on the line or lines constructed under this contract, which appear during the specified hydrostatic test or at any subsequent time before final acceptance of the whole works, shall be located and repaired by and at the expense of the Contractor. All installed pipe shall be listed for leakage in accordance with AWWA Standard Specifications.

C. DISINFECTION

1. Upon completion of all construction activities, the Contractor shall disinfect all water mains with a chlorine solution having an active available chlorine concentration of 100 parts per million, maintaining the pipe full of solution and under normal pressure for 24 hours. The residual chlorine solution at the end of the 24-hour disinfecting period shall not be less than 10 ppm. Upon completion, the water mains shall be flushed until the residual chlorine is not greater than 0.4 parts per million. The method of disinfecting the mains shall comply with Oklahoma Department of Environmental Quality Standards. Disinfection must be in accordance with AWWA Standard Specifications and require obtaining safe bacteriological samples on 2 consecutive days before placing the waterline into service. A set of samples shall be collected every 1,200 feet along new waterlines.

D. GUARANTEE

1. CONTRACTOR shall guarantee all materials and appurtenances furnished and work performed for a period of one (1) year from the date of substantial completion. CONTRACTOR warrants and guarantees for a period of one (1) year from the date of substantial completion of the system that the completed system is free from all defects due to faulty materials or workmanship and the CONTRACTOR shall promptly make such corrections as may be necessary by reason of such defects, including the repairs of any damage to other parts of the system resulting from such defects or workmanship. The TPWA will give notice of observed defects with reasonable promptness. In the event the Contractor

should fail to make such corrections, the TPWA may do so and charge the Owner/Contractor the costs thereby incurred.

END OF SECTION 33 10 00

SECTION 33 3000

SANITARY SEWERAGE UTILITIES

PART 1 - GENERAL

1.01 RELATED DOCUMENTS

A. Drawings and general provisions of the Contract, including General and Supplementary Conditions and Division 01 Specification Sections, apply to this Section.

1.02 SUMMARY

A. The work under this section of the Specifications includes all labor, materials, equipment, and services necessary for SANITARY SEWERAGE UTILITIES as shown on the Drawings and herein specified and in accordance with the Contract Documents. All costs for labor, materials, equipment, and services necessary for SANITARY SEWERAGE UTILITIES shall be included in the bid prices for the work.

1.03 SECTION INCLUDES

A. Sanitary Utility Sewerage Piping
B. Sanitary Utility Sewerage Manholes
C. Sanitary Utility Sewerage Clean-outs

1.04 RELATED SECTIONS

A. 31 23 00 Excavation and Fill
B. 31 25 00 Erosion and Sedimentation Controls

1.05 DEFINITIONS

A. AHJ – Authority Having Jurisdiction

1. City of Tahlequah
2. Oklahoma Department of Environmental Quality

1.06 ACTION SUBMITTALS

A. Product Data: For each type of product indicated.

1. Pipe
2. Manholes
3. Manholes Rings and Covers
4. Manhole Coating
5. Fittings
6. Clean-outs
7. Tracer Wire

B. Field quality-control test reports.

1.07 INFORMATIONAL SUBMITTALS

A. Photograph, video, or both the existing trees and plantings, adjoining construction, roadways, utilities, and site improvements to establish preconstruction conditions. Identify preexisting damage to trees, plantings, adjoining construction, pavements, sidewalks, and other site improvements. Include plans and notations to identify and describe any such conditions.

1.08 QUALITY ASSURANCE

A. PRECONSTRUCTION CONFERENCE

1. Conduct a preconstruction conference. Subcontractors that will be performing the work shall attend the preconstruction conference. Notify ENGINEER one week (7 days) prior to the date of the meeting.

B. REGULATORY REQUIREMENTS

1. All materials and methods shall comply with the requirements of the AHJ.
2. If the AHJ has not adopted specifications for materials and methods, the current edition of the City of Oklahoma City's Standard Specifications for Construction of Public Improvements shall be used.

1.09 PERMITS

A. CONTRACTOR shall make application; pay permit fees; provide payment and performance bonds required of the CONTRACTOR by the AHJ.

1.10 TOPOGRAPHIC SURVEY

A. OWNER has or will perform a survey of the site, stake the property limits, and provide a reference benchmark elevation.

1.11 UNDERGROUND UTILITIES

A. CONTRACTOR shall contact OKIE (811 or 1-800-522-OKIE) prior to construction for locating existing utilities.

B. The underground utilities shown on the Drawings have been located from field survey surface information and existing drawings. ENGINEER and Surveyor make no guarantee that the underground utilities shown comprise all such utilities in the area, either in service or abandoned. The underground utilities are located as accurately as possible from information available; however, ENGINEER and Surveyor further do not guarantee that the underground utilities shown are in the exact location indicated either vertically or horizontally. ENGINEER and Surveyor have not physically located the underground utilities by probing, excavating, hydrovac, or by any other means.

C. CONTRACTOR shall notify all utility companies and governmental agencies who may have utility lines on or about the premises or who may be affected by the construction. Notice shall be given no less than twenty-four hours prior to any work that may interfere with a utility.

D. All existing structures, improvement and utilities designated to remain shall be adequately protected from damage that might otherwise occur due to construction operations. Where construction comes in close proximity to existing structures, utilities or appurtenances, or if it becomes necessary to move services, poles, guy wires, pipe lines or other obstructions, CONTRACTOR shall notify and cooperate with the owner of the utility, structure, or appurtenance. The utility lines and other existing structures shown on the plans are for information only and are not guaranteed to be complete or accurate as to location and/or depth. CONTRACTOR shall be liable for damage to any utilities resulting from the CONTRACTOR's operations. During construction, all fire hydrants, valve boxes, fire or police call boxes and other existing utility controls shall be left intact, unobstructed and accessible unless noted on the plan.

E. Contractor shall satisfy themselves as to the actual existing subsurface conditions, including but not limited to the depth, location and sizes of pipe or conduits of various kinds in place prior to beginning work. Where the exact depth of any utility or obstruction is not shown on a plan, excavation shall be made prior to reaching the obstruction in order

to determine adjustments in grade if needed to prevent interference. Redesign to eliminate conflicts may be necessary.

1.12 CONSTRUCTION CONTROL

A. Do not commence work until temporary erosion and sedimentation control measures are in place.

B. CONTRACTOR shall be responsible for properly laying out the work, and for lines and measurements for the work executed under the Contract Documents. Verify the figures shown on the Drawings before ordering any materials and laying out the work, and report errors or inaccuracies in writing to the ENGINEER before commencing work. The ENGINEER or his representative will in no case assume the responsibility for laying out the work.

C. Existing survey points other than those shown on the Drawings shall not be considered as acceptable control points unless approved by the ENGINEER. If approval is secured, CONTRACTOR remains responsible for maintaining them and for their accuracy. Be responsible for preserving all existing iron or metal, and all concrete survey points or monuments for the construction period.

1.13 PROJECT CONDTIONS

A. TRAFFIC

1. Obtain any required Work Zone Permits from the AHJ at least two (2) working days prior to the start of work and/or placing or removing any barricades or modifying existing traffic control devices.
2. CONTRACTOR shall be responsible for erecting and maintaining barricades and other traffic warning devices as necessary around the perimeter of construction and adjacent to any open trenches. Provide and maintain adequate detours around the work under construction. Provide sufficient lights, warning signs, and watchmen for the safety of the public.
3. Any temporary street closure shall be coordinated with and approved by the AHJ. CONTRACTOR shall establish all detour routes while streets are closed during construction. CONTRACTOR shall notify Fire, Police, and EMSA headquarters when any street is temporarily closed.
4. CONTRACTOR is responsible for the prompt replacement and/or repair of all traffic control devices and appurtenances damaged or disturbed due to construction. Any existing traffic signals, signal loops, conduits, cables, and other traffic control devices affected by the work shall be reset or replaced according to AHJ's specifications. Coordinate the work with the AHJ's traffic department.

B. UTILITY INTERRUPTIONS

1. Do not interrupt any utility serving facilities occupied by Owner or others unless permitted by OWNER and the owner(s) of the utility. Temporary utility service shall be provided for any interruption. Notify OWNER and ENGINEER one week (7 days) in advance of proposed interruption of utility.

C. SUBSURFACE CONDITIONS

1. A geotechnical report has been prepared for this Project and is available for information only. The opinions expressed in this report are those of geotechnical engineer and represent interpretations of subsoil conditions, tests, and results of analyses conducted by geotechnical engineer. Owner will not be responsible for interpretations or conclusions drawn from the data.

D. EXCAVATION AND TRENCH SAFETY SYSTEMS

1. CONTRACTOR shall be responsible for complying with State laws and Federal regulations relating to excavation and trench safety, including those which may be enacted during the performance under this Contract. CONTRACTOR is advised that Federal Regulations 29 C.F.R. 1926.650-1926.652 have been, in their most recent version as amended, in effect since January 2, 1990. CONTRACTOR shall fully comply with the U.S. Department of Labor Occupational Safety and Health Administration (OSHA) regulations pertaining to excavations, trenching, and shoring and shall provide and familiarize its employees involved in excavation and trenching with the provisions in OSHA Pamphlet Number 2226, Excavating and Trenching Operations.

1.14 HAZARDOUS CONDITIONS

A. If CONTRACTOR encounters a Hazardous Environmental Condition or if CONTRACTOR or anyone for whom CONTRACTOR is responsible creates a Hazardous Environmental Condition, CONTRACTOR shall immediately: (i) secure or otherwise isolate such condition; (ii) stop all Work in connection with such condition and in any area affected thereby (except in an emergency); and (iii) notify OWNER and ENGINEER (and promptly thereafter confirm such notice in writing). OWNER shall promptly consult with ENGINEER concerning the necessity for OWNER to retain a qualified expert to evaluate such condition or take corrective action, if any.

PART 2 - PRODUCTS

2.01 ADOPTED PRODUCT REQUIRMENTS

A. All materials and products shall comply with the current edition of the AHJ's Standard Specifications.

2.02 DUCTILE-IRON, GRAVITY SEWER PIPE AND FITTINGS

A. Pipe: ASTM A 746, for push-on joints.
B. Standard Fittings: AWWA C110, ductile or gray iron, for push-on joints.
C. Compact Fittings: AWWA C153, ductile iron, for push-on joints.
D. Gaskets: AWWA C111, rubber.

2.03 DUCTILE-IRON, PRESSURE PIPE AND FITTINGS

A. Push-on-Joint Piping:
B. Pipe: AWWA C151.
C. Standard Fittings: AWWA C110, ductile or gray iron.
D. Compact Fittings: AWWA C153.
E. Gaskets: AWWA C111, rubber, of shape matching pipe and fittings.
F. Mechanical-Joint Piping:
G. Pipe: AWWA C151, with bolt holes in bell.
H. Standard Fittings: AWWA C110, ductile or gray iron, with bolt holes in bell.
I. Compact Fittings: AWWA C153, with bolt holes in bells.
J. Glands: Cast or ductile iron; with bolt holes and high-strength, cast-iron or high-strength, low-alloy steel bolts and nuts.
K. Gaskets: AWWA C111, rubber, of shape matching pipe, fittings, and glands.

2.04 POLYVINYL CHLORIDE (PVC) PIPE AND FITTINGS

A. SOLID WALL PVC - All solid wall PVC pipe and fittings shall conform to the requirements of the appropriate ASTM listed below or as modified herein.

1. ASTM D-3034 –
    a. Standard Specification for "Type PSM Poly (Vinyl Chloride) (VC) Sewer Pipe and Fittings". Pipe and fittings shall have a minimum stiffness of forty-six (46 psi) pounds per square inch and a minimum SDR of thirty-five (35). Pipe and fittings may be supplied in sizes ranging from four (4”) inches to fifteen (15”) inches in diameter.
    b. The pipe shall be made of PVC plastic having a cell classification of 12454-B or 12454-C or 12364-C or 13364-B (with minimum tensile modulus of 500,000 psi) as defined in ASTM D-1784. The fittings shall be made of PVC plastic having a cell classification of 12454-B, 12454-C, or 13343-C as defined in ASTM D-1784.
    c. Elastomeric Gasketed Joints shall be used to provide a watertight seal and shall meet the requirements of ASTM D-3212.
2. ASTM F-679 –
    a. Standard Specification for "Poly (Vinyl Chloride) (PVC) Large-Diameter Plastic Gravity Sewer Pipe and Fittings". Pipe and fittings shall have a minimum stiffness of forty-six (46 psi) pounds per square inch and a minimum SDR of thirty-five (35). Pipe and fittings may be supplied in sizes ranging from eighteen (18”) inches to thirty-six (36”) inches in diameter.
    b. The pipe and fitting materials shall be made of PVC plastic having a minimum cell classification of 12364-C or 12454-C as defined in ASTM D-1784. Homopolymer PVC compounds must equal or exceed the requirements of the above listed minimum cell classification number.
    c. Integral Bell Gasket Joint shall be used to provide a watertight seal and shall meet the requirements of ASTM D-3212.
3. ASTM F-789 –
    a. Standard Specification for "Type PS-46 Poly (Vinyl Chloride) (PVC) Plastic Gravity Flow Sewer Pipe and Fittings". Pipe and fittings shall have a minimum stiffness of forty-six (46 psi) pounds per square inch. Pipe and fittings may be supplied in sizes ranging from four (4”) inches to eighteen (18”) inches in diameter.
    b. The pipe shall be made of PVC plastic having a minimum cell classification of 12164-B as defined in ASTM D-1784. The fittings shall be made of PVC plastic having a cell classification of 12454-C or 13343-C as defined in ASTM D-1784.
    c. Elastomeric Gasketed Joints shall be used to provide a watertight seal and shall meet the requirements of ASTM D-3212. Joints shall also be compatible to ASTM D-3034 joint dimensions.

B. PROFILE WALL (PVC) - All profile (open or closed) wall PVC pipe and fittings shall conform to the requirements of the appropriate ASTM listed below and modified herein. Regardless of size, open profile wall pipes will be allowed only on sections of pipe when there are no apparent service connections. Otherwise, open profile wall pipe will not be allowed.

1. ASTM F-794 –
    a. Standard Specification for "Poly (Vinyl Chloride) (PVC) Profile Gravity Sewer Pipe and Fittings Based on Controlled Inside Diameter". Pipe and fittings shall have a minimum stiffness of forty-six (46 psi) pounds per square inch. Pipe and fittings may be supplied in sizes ranging from twelve (12”) inches to forty-eight (48”) inches in diameter.

b. The pipe and fittings shall be made of PVC plastic having a minimum cell classification of 12454-B or 12364-C as defined in ASTM D-1784.
c. Gasketed Joint Systems shall be used. The integral bell gasketed joint, coupling or fitting joints shall be designed so that when assembled, the gasket will be compressed radially on the pipe spigot or in the bell to form a watertight seal. The joints shall be designed to comply with and show no leakage when tested in accordance with ASTM D-3212.
d. Closed profile PVC pipes manufactured with a gasketed joint coupling system, with no bell and spigot, may be used for slip-lining installations.
e. Couplings shall form a watertight seal when assembled with plain end pipe and show no sign of leakage when tested in accordance with ASTM D-3212.

2. ASTM F-949 –
a. Standard Specification for "Poly (Vinyl Chloride) (PVC) Corrugated Sewer Pipe with a Smooth Interior and Fittings". Pipe and fittings shall have a minimum stiffness of fifty (50 psi) pounds per square inch. Pipe and fittings may be supplied in sizes ranging from twelve (12”) inches to thirty-six (36”) inches in diameter.
b. The pipe shall be made of PVC plastic having a minimum cell classification 12454-B or 12454-C as defined in ASTM D-1784. The fittings shall be made of PVC plastic having a cell classification of 12464-B, 12464-C, or 13343-C as defined in ASTM D-1784.
c. Elastomeric Gasketed Joints shall be used to provide watertight seal and shall meet the requirements of ASTM D-3212.

C. SPECIAL PVC PIPE - Special PVC pipe and fittings shall conform to the requirements of the appropriate standards listed below or as modified herein.

1. ASTM D-2241 –
a. Standard Specifications for Polyvinyl Chloride (PVC) Pressure-rated Pipe (SDR Series). Pipe and fittings shall have a minimum SDR of thirty-two and one-half (32-1/2) and may be supplied in sizes ranging from four (4) inches to thirty-six (36) inches in diameter.
b. The pipe and fittings shall be made of PVC compounds having a cell classification of 12454-B, 12454-C, or 14333-D as defined in ASTM D-1784.
c. Elastomeric gasketed joints meeting the requirements of ASTM D-3212 shall be used to provide a watertight seal.

2. AWWA C-900 and AWWA C-905 –
a. Standards for PVC Pressure Pipe from four (4”) inches through twelve (12”) inches, and fourteen (14”) inches through thirty-six (36”) inches, respectively. Pipes shall have a minimum DR rating of eighteen (18) for diameters four (4”) inches through twelve (12”) inches. For pipes greater than twelve (12”) inches in diameter, the minimum DR shall be thirty-two and one-half (32 1/2).
b. The pipe and fittings shall be made of PVC compounds having a cell classification of 12454-A or 12454-B as defined in ASTM D-1784.
c. Elastomeric gasketed joints meeting the requirements of ASTM D-3139, when measured in accordance with ASTM-2122, shall be used to provide a watertight seal.

2.05 BACKWATER VALVES

A. Cast-Iron Backwater Valves:

1. Description: ASME A112.14.1, gray-iron body and bolted cover, with bronze seat.
2. Horizontal type; with swing check valve and hub-and-spigot ends.
3. Combination horizontal and manual gate-valve type; with swing check valve, integral gate valve, and hub-and-spigot ends.
4. Terminal type; with bronze seat, swing check valve, and hub inlet.

B. Plastic Backwater Valves:

1. Description: Horizontal type; with PVC body, PVC removable cover, and PVC swing check valve.

2.06 CLEANOUTS

A. Cast-iron Cleanouts:

1. Manufacturers: Subject to compliance with requirements.
2. Description: ASME A112.36.2M, round, gray-iron housing with clamping device and round, secured, scoriated, gray-iron cover. Include gray-iron ferrule with inside calk or spigot connection and countersunk, tapered-thread, brass closure plug.
3. Top-Loading Classification(s): Heavy Duty.
4. Sewer Pipe Fitting and Riser to Cleanout: ASTM A 74, Service class, cast-iron soil pipe and fittings.

B. PVC Cleanouts:

1. Description: PVC body with PVC threaded plug. Include PVC sewer pipe fitting and riser to cleanout of same material as sewer piping.

2.07 MANHOLES

A. Standard Precast Concrete Manholes:

1. Description: ASTM C 478, precast, reinforced concrete, of depth indicated, with provision for sealant joints.
2. All concrete for manhole and base shall be Class A concrete with a minimum compressive strength of 4,000 psi.
3. Diameter: 48 inches minimum.
4. Wall Thickness:
    a. The minimum wall thickness shall not less than 5-in and shall not be less than one-twelfth (1/12) of the internal diameter of the largest cone or riser.
    b. Manholes with 60-in and 48-in diameters shall have a 5-inch minimum thickness, and lengths to provide depth indicated.
    c. Manholes with 72-in diameters shall have a 6-inch minimum thickness, and lengths to provide depth indicated.
    d. Manholes with 84-in diameters shall have a 7-inch minimum thickness, and lengths to provide depth indicated.
    e. Manholes with 96-in diameters shall have an 8-inch minimum thickness, and lengths to provide depth indicated.
5. Base section shall have a 9-inch minimum floor slab thickness. Floor slab shall be integral with base section. Increase thickness of precast concrete sections or add concrete to base section as required to prevent flotation.

6. Provided riser sections as needed to achieve the required manhole depth.
7. Top section shall be eccentric-cone type unless flat-slab-top type is indicated, and top of cone of size that matches grade rings.
8. Joint sealant shall meet ASTM C 990, bitumen or butyl rubber.
9. Pipe connectors shall be resilient pipe connectors per ASTM C 923, cast or fitted into manhole walls, for each pipe connection.
10. Steps: Individual FRP steps; FRP ladder; or ASTM A 615/A 615M, deformed, 1/2-inch steel reinforcing rods encased in ASTM D 4101, PP, wide enough to allow worker to place both feet on one step and designed to prevent lateral slippage off step. Cast or anchor steps into sidewalls at 12-inch to 16-inch intervals. Omit steps if total depth from floor of manhole to finished grade is less than 60 inches.
11. Adjusting Rings: Interlocking HDPE rings with level or sloped edge in thickness and diameter matching manhole frame and cover, and of height required to adjust manhole frame and cover to indicated elevation and slope. Include sealant recommended by ring manufacturer.
12. Grade Rings: Reinforced-concrete rings, 6-inch to 9-inch total thickness, to match diameter of manhole frame and cover, and height as required to adjust manhole frame and cover to indicated elevation and slope.

B. Designed Precast Concrete Manholes:

1. Description: ASTM C 913; designed according to ASTM C 890 for A-16 (AASHTO HS20-44), heavy-traffic, structural loading; of depth, shape, and dimensions indicated, with provision for sealant joints.
2. Ballast: Increase thickness of one or more precast concrete sections or add concrete to manhole as required to prevent flotation.
3. Joint Sealant: ASTM C 990, bitumen or butyl rubber.
4. Resilient Pipe Connectors: ASTM C 923, cast or fitted into manhole walls, for each pipe connection.
5. Steps: Individual FRP steps; FRP ladder; or ASTM A 615/A 615M, deformed, 1/2-inch steel reinforcing rods encased in ASTM D 4101, PP, wide enough to allow worker to place both feet on one step and designed to prevent lateral slippage off step. Cast or anchor steps into sidewalls at 12-inch to 16-inch intervals. Omit steps if total depth from floor of manhole to finished grade is less than 60 inches.
6. Adjusting Rings: Interlocking HDPE rings with level or sloped edge in thickness and diameter matching manhole frame and cover, and of height required to adjust manhole frame and cover to indicated elevation and slope. Include sealant recommended by ring manufacturer.
7. Grade Rings: Reinforced-concrete rings, 6-inch to 9-inch total thickness, to match diameter of manhole frame and cover, and of height required to adjust manhole frame and cover to indicated elevation and slope.

C. Frames and Covers

1. Manhole frames and covers shall be to the dimensions and specifications of the current AHJ's Standard Specifications.

D. Manhole Coatings

1. High-Build Epoxy Coatings
    a. The coating material shall be a two (2) part, one hundred (100%) percent solids epoxy-resin with fibrous and flake fillers specifically designed for sanitary sewer applications. The coating material shall have the following minimum properties as listed below:

1) Tensile Strength – Minimum 8,000 psi ASTM D-638 (7 day cure at 25 deg C)
2) Tensile Elongation – Minimum 20% ASTM D-6387 day cure at 25 deg C)
3) Compressive Strength – Minimum 80 Shore D ASTM D-2240 (7 day cure at 25 deg C)
4) 25% Sulfuric Acid – 28 days without deterioration after continuous contact with fresh chemical at 25 deg C ASTM C-267
5) Solids by Volume – 100%

2. Polyurea Coating Systems
   a. The coating material shall be urethane-based one hundred (100%) percent solids resin with chemically resistant fillers specifically designed for sanitary sewer applications. The coating material, tested at 25°C, shall have the following minimum properties as listed below:
      1) Tensile Strength – Minimum 1,800 psi ASTM D-412 (7 day cure at 25 deg C)
      2) Recoverable Elongation – Minimum 300% ASTM D-412 (7 day cure at 25 deg C)
      3) Surface Hardness – Minimum 80 Shore D ASTM D-2240 (7 day cure at 25 deg C)
      4) 20% Sulfuric Acid – 28 days without deterioration after continuous contact with fresh chemical at 25 deg C ASTM C-267
      5) Solids by Volume – 100%

2.08 CONCRETE

A. General: Cast-in-place concrete according to ACI 318, ACI 350/350R, and the following:

1. Cement: ASTM C 150, Type II.
2. Fine Aggregate: ASTM C 33, sand.
3. Coarse Aggregate: ASTM C 33, crushed gravel.
4. Water: Potable.

B. Portland Cement Design Mix: 4000 psi minimum, with 0.45 maximum water/cementitious materials ratio.

1. Reinforcing Fabric: ASTM A 185, steel, welded wire fabric, plain.
2. Reinforcing Bars: ASTM A 615, Grade 60 deformed steel.

C. Manhole Channels and Benches: Factory or field formed from concrete. Portland cement design mix, 4000 psi minimum, with 0.45 maximum water/cementitious materials ratio. Include channels and benches in manholes.

1. Channels: Concrete invert, formed to same width as connected piping, with height of vertical sides to three-fourths of pipe diameter. Form curved channels with smooth, uniform radius and slope.
   a. Invert Slope: 2 percent through manhole.
2. Benches: Concrete, sloped to drain into channel.
   a. Slope: 8 percent.

D. Ballast and Pipe Supports: Portland cement design mix, 4000 psi minimum, with 0.58 maximum water/cementitious materials ratio.

1. Reinforcing Fabric: ASTM A 185, steel, welded wire fabric, plain.

2. Reinforcing Bars: ASTM A 615, Grade 60 deformed steel.

PART 3 - EXECUTION

3.01 ADOPTED PLACEMENT REQUIREMENTS

A. The installation of SANITARY SEWERAGE UTILITIES shall comply with the current edition of the AHJ's Standard Specifications.

3.02 EARTHWORK

A. Excavation, trenching, and backfilling are specified in Section 31 23 00 Excavation and Fill.

3.03 PIPING INSTALLATION

A. General Locations and Arrangements: Drawing plans and details indicate general location and arrangement of underground sanitary sewer piping. Location and arrangement of piping layout take into account design considerations. Install piping as indicated, to extent practical. Where specific installation is not indicated, follow piping manufacturer's written instructions.

B. Install piping beginning at low point, true to grades and alignment indicated with unbroken continuity of invert. Place bell ends of piping facing upstream. Install gaskets, seals, sleeves, and couplings according to manufacturer's written instructions for using lubricants, cements, and other installation requirements.

C. Install manholes for changes in direction unless fittings are indicated. Use fittings for branch connections unless direct tap into existing sewer is indicated.

D. Install proper size increasers, reducers, and couplings where different sizes or materials of pipes and fittings are connected. Reducing size of piping in direction of flow is prohibited.

E. When installing pipe under streets or other obstructions that cannot be disturbed, use pipe-jacking process of microtunneling.

F. Install gravity-flow, nonpressure, drainage piping according to the following:

1. Install piping pitched down in direction of flow, at minimum slope of 1 percent unless otherwise indicated.
2. Install piping NPS 6 and larger with restrained joints at tee fittings and at changes in direction. Use corrosion-resistant rods, pipe or fitting manufacturer's proprietary restraint system, or cast-in-place-concrete supports or anchors.
3. Install piping with 36-inch minimum cover.
4. Install ductile-iron, gravity sewer piping according to ASTM A 746.
5. Install PVC pipe according to ASTM D 2321 and ASTM F 1668.

3.04 MANHOLE INSTALLATION

A. General: Install manholes, complete with appurtenances and accessories indicated.

B. Install precast concrete manhole sections with sealants according to ASTM C 891.

C. Where specific manhole construction is not indicated, follow manhole manufacturer's written instructions.

D. Set tops of frames and covers flush with finished surface of manholes that occur in pavements. Set tops 3-inch above finished surface elsewhere unless otherwise indicated.

3.05 CONCRETE PLACEMENT

A. Place cast-in-place concrete according to ACI 318.

3.06 BACKWATER VALVE INSTALLATION

A. Install horizontal-type backwater valves in piping where indicated.

B. Install combination horizontal and manual gate-valve type in piping and in manholes where indicated.

C. Install terminal-type backwater valves on end of piping and in manholes where indicated.

3.07 CLEANOUT INSTALLATION

A. Install cleanouts and riser extensions from sewer pipes to cleanouts at grade. Use cast-iron soil pipe fittings in sewer pipes at branches for cleanouts and cast-iron soil pipe for riser extensions to cleanouts. Install piping so cleanouts open in direction of flow in sewer pipe.

1. Use Light-Duty, top-loading classification cleanouts in earth areas.
2. Use Heavy-Duty, top-loading classification cleanouts in vehicle-traffic service areas.

B. Set cleanout frames and covers in cast-in-place concrete block, 18-inch by 18-inch by 12-inch deep.

C. Set cleanout frames and covers in earth areas with tops 1-inch above surrounding earth grade.

D. Set cleanout frames and covers in concrete pavement and roads with tops flush with pavement surface.

3.08 CONNECTIONS

A. Connect nonpressure, gravity-flow drainage piping to building's sanitary building drains.

B. Make connections to existing piping and underground manholes.

C. Use commercially manufactured wye or saddle fittings with stainless steel bands for piping branch connections. Remove section of existing pipe, install wye or saddle fitting into existing piping, and encase entire wye or saddle fitting with not less than 2 ft depth x 2.2 ft width x 2.0 ft length of concrete with 28-day compressive strength of 3000 psi.

D. Make branch connections from side into existing piping, NPS 4 to NPS 20. Remove section of existing pipe, install wye fitting into existing piping, and encase entire wye with not less than 6 inches of concrete with 28-day compressive strength of 3000 psi.

E. Make branch connections from side into existing piping, NPS 21 or larger, or to underground manholes by cutting opening into existing unit large enough to allow 3 inches of concrete to be packed around entering connection. Cut end of connection pipe passing through pipe or structure wall to conform to shape of and be flush with inside wall unless otherwise indicated. On outside of pipe or manhole wall, encase entering connection in 6 inches of concrete for minimum length of 12 inches to provide additional support of collar from connection to undisturbed ground.

F. Use concrete that will attain a minimum 28-day compressive strength of 3000 psi unless otherwise indicated.

G. Use epoxy-bonding compound as interface between new and existing concrete and piping materials.

H. Protect existing piping and manholes to prevent concrete or debris from entering while making tap connections. Remove debris or other extraneous material that may accumulate.

3.09 MANHOLE COATINGS

A. Surface Preparation

1. The Contractor shall use cleaning methods that are adequate to remove loose material from the manhole. All existing manhole steps or ladder are to be removed. The Contractor shall take all necessary precautions to prevent falling

debris from damaging the manhole trough and/or entering the sewer. Infiltration through existing manhole walls that would adversely affect the material used in the annular space shall be eliminated or reduced to an acceptable level.

2. Mechanical cleaning shall be done to provide a good bond between the epoxy coating and the substrate. Water blasting with a minimum of five thousand (5,000 psi) pounds per square inch shall be done to remove oil, grease and foreign materials from all surfaces to be coated. For brick manholes, use a minimum of six thousand (6,000 psi) pounds per square inch of water pressure. In areas where the concrete has become softened due to chemical attack, several millimeters of the wall surface shall be removed using water pressures of twenty-five thousand (25,000 psi) pounds per square inch to thirty-five thousand (35,000 psi) pounds per square inch, or as recommended by the coating manufacturer, to ensure that a sound substrate is exposed. Surfaces shall be made damp or dry as required by the manufacturer before application of coating system begins.

B. Application

1. The material shall be mixed and applied, in two (2) or three (3) coats, in accordance with the manufacturer's written instructions, using approved equipment. When applying a Polyurea coating, all surfaces to be coated shall be primed as required by the manufacturer. The material shall be applied to all interior surfaces of the manhole with a minimum thickness of one hundred (100) mils.
2. The Contractor shall allow a minimum of two (2) hours cure time before returning the manhole to active flow conditions or as recommended by the manufacturer. After seven (7) day cure, the liner's surface shall be free of runs, sags, and other irregularities that indicate improper application practice. When directed by the Engineer, liner shall be repaired following the manufacturer's recommendation and to the Engineer's satisfaction.

3.10 IDENTIFICATION

A. Comply with requirements in Section 31 23 00 Excavation and Fill for underground utility identification devices. Arrange for installation of green warning tapes directly over piping and at outside edges of underground manholes.
B. Use warning tape or detectable warning tape over ferrous piping.
C. Use detectable warning tape over nonferrous piping and over edges of underground manholes.

3.11 FIELD QUALITY CONTROL

A. Deflection Testing

1. Deflection tests shall be performed not less than thirty (30) days after backfill has been placed. The maximum allowable deflection shall not exceed five (5%) percent of the pipe's base internal diameter (Base ID). Tests must be run using a rigid ball or mandrel with a diameter equal to 95% of the inside diameter of the pipe taking into account manufacturing tolerances. Tests must be performed without mechanical pulling devices. Base ID for PVC pipes shall be calculated from measurements taken in accordance with ASTM D 2122 and according to procedures outlined in Appendix XI of ASTM D 3034. For PE pipes Base ID shall be calculated from measurements taken in accordance with ASTM D 2122 and according to procedures recommended by the manufacturer and approved by

the Engineer. For other flexible pipes, base ID shall be calculated in accordance with the manufacturer's recommended procedures and approved by the Engineer.

2. A mandrel (go/no-go) device cylindrical in shape shall be hand-pulled by the Contractor through all sewer lines. Any sections of pipe not passing the mandrel test shall be uncovered and the Contractor, at no additional cost to the City, shall replace the pipe to the satisfaction of the Engineer. The repaired sections shall be re-tested. All tests for pipes twenty-four inch (24") and larger shall be performed in the presence of the Engineer.
3. In lieu of mechanical measurement of deflection by a mandrel, manual measurement can be performed using an internal micrometer or telescoping gage accurate to plus or minus (±) one-thousandth (0.001") inch. The manual measurement of the vertical internal diameter shall be taken at the centerline of the installed pipe.

B. Leakage Testing

1. After backfilling has been completed, the Contractor shall conduct infiltration, exfiltration or air tests. All tests shall be performed in the presence of the Engineer for pipes twenty-four inches (24") and larger. Immediately prior to conducting a test, the ground water level shall be determined by boring a vertical hole adjacent to the pipe and measuring the distance to the water level, or by the use of a one-inch (1") diameter pipe installed horizontally through the upstream manhole wall with a clear plastic tube connected to the pipe and extending vertically.
2. Infiltration Test
    a. Where sewers are laid under the groundwater, infiltration testing shall be conducted. If at any time the infiltration between two adjacent manholes is observed and measured to exceed ten (10) gallons per inch of nominal pipe diameter per mile of sewer per day. The Contractor shall locate the leakage and shall make such repairs as are necessary to reduce the infiltration. The infiltration shall be measured under the direction of the Engineer by use of a weir or other suitable flow rate-measuring device furnished and installed by the Contractor.
3. Exfiltration Test
    a. Where sewers are laid above the groundwater table, exfiltration testing shall be conducted. Exfiltration tests shall be conducted by blocking off the other openings in the upper manhole and plugging the line where it enters the lower manhole of the reach to be tested, filling the line and the manhole with water at least five foot (5') higher than the top of the pipe or five feet (5') higher than the ground water elevation whichever is higher, and measuring the water required to keep the water level in the manhole at a constant elevation. The test section shall be filled not less than twelve (12) hours prior to testing. The total exfiltration shall not exceed ten (10) gallons per inch of nominal pipe diameter per mile (idm) of pipe per day for each reach tested. For purposes of determining the maximum allowable leakage, manholes shall be considered as sections of pipe having an idm equal to the diameter times depth of the manhole. The exfiltration test shall be maintained on each reach for at least two (2) hours or longer if, in the opinion of the Engineer, this is necessary to locate all leaks.

b. The Contractor shall provide all necessary piping between the reach to be tested and the source of water supply, together with equipment and materials required for the tests. The methods used and the time of conducting the exfiltration tests shall be subject to the approval of the Engineer.

c. If the leakage in any reach exceeds the allowable maximum, the Contractor shall locate the leakage and shall make such repairs as are necessary for the pipe to pass testing. The pipe reach shall be retested after the leaks are repaired.

4. Air Test

a. Air tests shall be conducted on each manhole-to-manhole section of sewer. The air test shall be performed in accordance with the following specifications.

b. Equipment - Cherne Air-Loc Equipment as manufactured by Cherne Industrial of Hopkins, Minnesota or approved equal. Equipment used shall meet the following requirements:

1) Pneumatic plugs shall have a sealing length equal to or greater than the diameter of the pipe to be inspected.

2) Pneumatic plugs shall resist internal test pressure without requiring external bracing or blocking.

c. All air used shall pass through a single control panel.

d. Three (3) individual hoses shall be used for the following connections:

1) From the control panel to pneumatic plugs for inflation;

2) From the control panel to sealed line for introducing the low-pressure air; and

3) From sealed line to control panel for continually monitoring the air pressure rise in the sealed line.

e. Procedures

1) All pneumatic plugs shall be seal-tested before being used in the actual test installation. One length of pipe shall be laid on the ground and sealed at both ends with the pneumatic plugs to be checked. Air shall be introduced into the plugs to twenty-five (25 psi) pounds per square inch gauge. The sealed pipe shall be pressurized to five (5 psi) pounds per square inch gauge. If a ground water level over the top of the pipe is present, the pressure in psig shall be increased by the height of ground water level above top of pipe at upstream manhole divided by two and one third (2 1/3). The plugs shall hold against this pressure without bracing and without movement of the plugs out of the pipe.

2) After a manhole reach of pipe has been backfilled and cleaned, and the pneumatic plugs are checked by the above procedures, the plugs shall be placed in the line at each manhole and inflated to twenty-five (25 psi) pounds per square inch gauge. Low-pressure air shall be introduced into this sealed line until the internal air pressure reaches four (4 psi) pounds per square inch gauge. At least two (2) minutes shall be allowed for the air pressure to stabilize. After the stabilization period (three and one half (3 ½ psi) pounds per square inch gauge minimum pressure in the pipe), the air hose from the control panel to the air supply shall be disconnected.

The portion of the line being tested shall be termed "acceptable" if the time required in minutes for the pressure to decrease from three and one half (3 ½ psi) to two and one half (2 ½ psi) pounds per square inch gauge is not less than that shown in the following table:

Pipe Nominal Size (Inches)	Minimum Test Time (min:sec)	Length for Minimum Time (Feet)
6	2:50	751
8	3:47	564
10	4:43	450
12	5:40	376

3) If the air leakage in any reach exceeds the allowable, it shall be re-tested after the leaks are repaired.

3.12 CLEANING

A. Clean dirt and superfluous material from interior of piping. Flush with potable water.

END OF SECTION 33 3000

SECTION 33 3200

WASTEWATER UTILITY PUMPING STATIONS

PART 1 GENERAL

1.01 RELATED DOCUMENTS

A. Drawings and general provisions of the Contract, including General and Supplementary Conditions and Division 01 Specification Sections, apply to this Section.

1.02 SUMMARY

A. The work under this section of the Specifications includes all labor, materials, equipment, and services necessary for WASTEWATER UTILITY PUMPING STATIONS as shown on the Drawings and herein specified and in accordance with the Contract Documents. All costs for labor, materials, equipment, and services necessary for WASTEWATER UTILITY PUMPING STATIONS shall be included in the bid prices for the work.

1.03 SCOPE OF WORK

A. Contractor shall provide a complete submersible pumping system. The system shall be a complete, fully integrated process system provided by a single Coordinating Supplier who shall furnish all labor, equipment, materials, and incidentals required and shall supervise the installation, start-up, and testing using qualified technicians and other specialists. The supplier shall coordinate the equipment requirements with the mechanical and electrical requirements of the Contract Documents, shall integrate the equipment furnished with the requirements shown on the electrical drawings, and provide complete installation and interconnection drawings and diagrams required for installation, start-up, testing and adjustment.

B. The pumping system for the lift station shall consist of two (2) submersible pumps, the electrical components, check valves, plug valves, access hatch covers, and a level control system as shown on the Contract plans.

1.04 DELIVERY, STORAGE, HANDLING

A. Individual equipment components shall be crated in structurally adequate packing containers to prevent damage during shipping, facilitate ease of handling and to provide suitable protection from weather for extended storage at the jobsite prior to installation. Packing containers shall be permanently labeled with appropriate equipment identification, shipping address and return address. Packing list shall be provided with equipment at time of delivery.

B. Electrical equipment shall be kept thoroughly dry at all times and shall be stored indoors. Equipment storage shall be protected and maintained in accordance with the manufacturer's recommendations. Equipment shall not be stored directly on the ground.

C. Contractor shall utilize equipment and tools of adequate size suitable for unloading, transporting, storing and supporting the equipment during installation. Caution shall be employed to prevent equipment damage resulting from abrupt contact with other materials or equipment.

1.05 RELATED REQUIREMENTS

A. 31 23 00 Excavation and Fill

B. 33 30 00 Sanitary Sewerage Utilities

1.06 DEFINITIONS

A. AHJ – Authority Having Jurisdiction

1. Tahlequah Public Works Authority

2. Oklahoma Department of Environmental Quality (ODEQ)

1.07 ACTION SUBMITTALS

A. Product Data

1. Pumps
2. Motors
3. Controls
4. Wet Well
5. Valve Vault
6. Access Doors
7. Valves

1.08 QUALITY ASSURANCE

A. The Contractor's attention is directed to the fact that the Submersible Pumping System is an integrated system which shall be furnished, factory assembled and integrated by one manufacturer or supplier who shall provide all of the equipment and appurtenances regardless of the manufacturer of the various components all under the Submersible Pumping System pay items. Substitution of functions specified will be subject to approval of the Engineer.

B. The materials or equipment so specified have been selected as being suitable for the service anticipated and will be regarded as standard. The Contractor should prepare his bid on the basis of the particular equipment and materials specified. The awarding of the contract will constitute a contractual obligation on the part of the Contractor to furnish the specified equipment and materials.

C. Pump Substitutions: In order to allow sufficient time for the Engineer to evaluate the type and quality of equipment being offered by the manufacturers or coordinating supplier not specified, the latter shall submit fifteen (15) days prior to the date set for the opening of bids on this project, the following descriptive literature and drawings for all equipment being offered under this item. Failure to provide a complete system and equipment description may result in non-acceptance of the equipment manufacturer if a bidder proposes this alternate equipment with their bid:

1. Specifications and drawings showing the dimensions and detailed description of the equipment offered.
2. General installation, piping and wiring details and arrangements for instruments and accessories.
3. Cost deduct to use the substitution over the specified equipment.

The manufacturer or supplier submitting equipment to be considered as a substitution shall pay the Engineer for his/her time to review the information. Engineering fees and required time to review shall be determined by the reviewing Engineer.

Equipment substitutions that have been deemed acceptable will be listed by addendum no later than five (5) days before the bid date.

D. The entire System shall be designed, coordinated and supplied by a company regularly engaged in the business of designing and fabricating pumping systems for a minimum of fifteen (15) years. Acceptable pump manufacturers are Hydromatic Pump as provided by Haynes Equipment Company, Oklahoma City, Oklahoma.

1.09 WARRANTY

A. The manufacturer shall warrant the equipment to be of quality construction, free from defects in materials and workmanship. The warranty shall become effective upon

acceptance by the Owner or Owner's authorized agent, or six (6) months after date of shipment, whichever occurs first.

B. The equipment, apparatus, and parts furnished shall be warranted for a period of one (1) year, excepting only those items that are normally consumed in service, such as oil, grease, packing gaskets, O-rings, etc. The manufacturer shall be solely responsible for the warranty of the equipment and all components.

C. Upon request from the Engineer and/or the Owner, the manufacturer shall demonstrate proof of financial responsibility with respect to performance and delivery date. In addition, the manufacturer shall provide proof of evidence of facilities, equipment, and skills required to produce the equipment specified herein and provide technical service and replacement parts.

D. Components failing to perform as specified by the Engineer, or as represented by the manufacturer, or proven defective in service during the warranty period, shall be replaced, repaired, or satisfactorily modified by the manufacturer without cost of parts or labor to the Owner.

1.10 TOPOGRAPHIC SURVEY

A. OWNER has or will perform a survey of the site, stake the property limits, and provide a reference benchmark elevation. CONTRACTOR shall be responsible for any additional offset staking or layout survey required to locate improvements and control grade of improvements. Be responsible for the proper location and level of the work and for the maintenance of reference lines and benchmarks. Any re-staking requested by the CONTRACTOR shall be done at his expense.

1.11 UNDERGROUND UTILITIES

A. CONTRACTOR shall contact OKIE (811 or 1-800-522-OKIE) prior to construction for locating existing utilities.

B. The underground utilities shown on the Drawings have been located from field survey surface information and existing drawings. ENGINEER and Surveyor make no guarantee that the underground utilities shown comprise all such utilities in the area, either in service or abandoned. The underground utilities are located as accurately as possible from information available; however, ENGINEER and Surveyor further do not guarantee that the underground utilities shown are in the exact location indicated either vertically or horizontally. ENGINEER and Surveyor have not physically located the underground utilities by probing, excavating, hydrovac, or by any other means.

C. CONTRACTOR shall notify all utility companies and governmental agencies who may have utility lines on or about the premises or who may be affected by the construction. Notice shall be given no less than twenty-four hours prior to any work that may interfere with a utility.

D. All existing structures, improvement and utilities designated to remain shall be adequately protected from damage that might otherwise occur due to construction operations. Where construction comes in close proximity to existing structures, utilities or appurtenances, or if it becomes necessary to move services, poles, guy wires, pipe lines or other obstructions, CONTRACTOR shall notify and cooperate with the owner of the utility, structure, or appurtenance. The utility lines and other existing structures shown on the plans are for information only and are not guaranteed to be complete or accurate as to location and/or depth. CONTRACTOR shall be liable for damage to any utilities resulting from the CONTRACTOR's operations. During construction, all fire hydrants, valve boxes, fire or police call boxes and other existing utility controls shall be left intact, unobstructed and accessible unless noted on the plan.

E. Contractor shall satisfy themselves as to the actual existing subsurface conditions, including but not limited to the depth, location and sizes of pipe or conduits of various

kinds in place prior to beginning work. Where the exact depth of any utility or obstruction is not shown on a plan, excavation shall be made prior to reaching the obstruction in order to determine adjustments in grade if needed to prevent interference. Redesign to eliminate conflicts may be necessary.

1.12 CONSTRUCTION CONTROL

A. Do not commence work until temporary erosion and sedimentation control measures are in place.

B. CONTRACTOR shall be responsible for properly laying out the work, and for lines and measurements for the work executed under the Contract Documents. Verify the figures shown on the Drawings before ordering any materials and laying out the work, and report errors or inaccuracies in writing to the ENGINEER before commencing work. The ENGINEER or his representative will in no case assume the responsibility for laying out the work.

C. Existing survey points other than those shown on the Drawings shall not be considered as acceptable control points unless approved by the ENGINEER. If approval is secured, CONTRACTOR remains responsible for maintaining them and for their accuracy. Be responsible for preserving all existing iron or metal, and all concrete survey points or monuments for the construction period.

1.13 PROJECT CONDTIONS

A. UTILITY INTERRUPTIONS

1. Do not interrupt any utility serving facilities occupied by Owner or others unless permitted by OWNER and the owner(s) of the utility. Temporary utility service shall be provided for any interruption. Notify OWNER and ENGINEER one week (7 days) in advance of proposed interruption of utility.

B. SUBSURFACE CONDITIONS

1. A geotechnical report has been prepared for this Project and is available for information only. The opinions expressed in this report are those of geotechnical engineer and represent interpretations of subsoil conditions, tests, and results of analyses conducted by geotechnical engineer. Owner will not be responsible for interpretations or conclusions drawn from the data.

C. EXCAVATION AND TRENCH SAFETY SYSTEMS

1. CONTRACTOR shall be responsible for complying with State laws and Federal regulations relating to excavation and trench safety, including those which may be enacted during the performance under this Contract. CONTRACTOR is advised that Federal Regulations 29 C.F.R. 1926.650-1926.652 have been, in their most recent version as amended, in effect since January 2, 1990. CONTRACTOR shall fully comply with the U.S. Department of Labor Occupational Safety and Health Administration (OSHA) regulations pertaining to excavations, trenching, and shoring and shall provide and familiarize its employees involved in excavation and trenching with the provisions in OSHA Pamphlet Number 2226, Excavating and Trenching Operations.

1.14 HAZARDOUS CONDITIONS

A. If CONTRACTOR encounters a Hazardous Environmental Condition or if CONTRACTOR or anyone for whom CONTRACTOR is responsible creates a Hazardous Environmental Condition, CONTRACTOR shall immediately: (i) secure or otherwise isolate such condition; (ii) stop all Work in connection with such condition and in any area affected thereby (except in an emergency); and (iii) notify OWNER and ENGINEER (and promptly thereafter

confirm such notice in writing). OWNER shall promptly consult with ENGINEER concerning the necessity for OWNER to retain a qualified expert to evaluate such condition or take corrective action, if any.

PART 2 PRODUCTS

2.01 SUBMERSIBLE PUMPS

A. GENERAL - Furnish and install a quantity of two (2) pull-up submersible pumping units. The pumps shall be clockwise rotation and constructed to automatically connect to the discharge piping when lowered into place.

B. CONDITIONS OF OPERATION - Each pump shall be capable of providing the following hydraulic conditions when pumping domestic sewage:

Pump	Hydromatic HPGFH
Capacity	86 GPM
Total Dynamic Head	24 ft
Motor HP	3 HP
Maximum Speed	1750 RPM
Minimum Shutoff Head	35 Feet

C. The pump volute, motor and seal housing shall be high quality gray cast iron, ASTM A-48, Class 30. The pump discharge shall be fitted with a 4" standard ASA 125 lb. flange, faced and drilled. All external mating parts shall be machined and Nitrile O-ring sealed on a beveled edge. Gaskets shall not be acceptable. All fasteners exposed to the pumped liquids shall be 300 series stainless steel

2.02 ELECTRICAL POWER CORD

A. Electrical power cord shall be SOOW, W, or GGC, water resistant 600V, 90°C, UL and CSA approved and applied dependent on amp draw for size.

B. The power cable entry into the cord cap assembly shall first be made with a compression fitting. Each individual lead shall be stripped down to bare wire at staggered intervals, and each strand shall be individually separated. This area of the cord cap shall then be filled with an epoxy compound potting which will prevent water contamination to gain entry even in the event of wicking or capillary action.

C. The power cord leads shall then be connected to the motor leads with extra heavy connectors with a screwed wire-to-wire connection.

2.03 MOTOR

A. The stator, rotor and bearings shall be mounted in a sealed submersible type housing. The stator windings shall have Class F insulation (155°C or 311°F) or Class H insulation (180°C or 356°F) and a dielectric oil-filled motor, NEMA B design.

B. The pump and motor shall be specifically designed so that they may be operated partially or completely submerged in the liquid being pumped.

C. Stators shall be securely held in place with a removable end ring and threaded fasteners so they may be easily removed. No special tools shall be required for pump and motor disassembly.

D. Pump shall be equipped with heat sensors. The heat sensor shall be a low resistance, bi-metal disc that is temperature sensitive. It shall be mounted directly on the stator windings and sized to open at 120°C and automatically reset at 30–35°C differential. The sensors shall be connected in series with motor starter coil so that the starter is tripped if a heat sensor opens. The motor starter shall be equipped with overload heaters so all normal overloads are protected by an external heater block.

2.04 BEARINGS AND SHAFT

A. An upper radial bearing and a lower thrust bearing shall be required. These shall be lubricated by the dielectric oil that fills the motor housing.

B. The shaft shall be machined from a solid 416 series stainless steel forging and be a design that is of large diameter with minimum overhang to reduce shaft deflection and prolong bearing life..

2.05 SEALS

A. The rotor and stator in the motor housing shall be separated and protected from the pumped liquid by an oil-filled seal housing incorporating two type 21 carbon ceramic mechanical seals mounted in tandem. This seal housing shall be equipped with two moisture sensing probes installed between the seals, and the sensing of moisture in the seal chamber shall be automatic, continuous, and not require the pump be stopped or removed from the wetwell.

2.06 IMPELLER

A. Impeller shall be brass multivane, semi-open, non-overloading design. They can either be factory or field trimmed to meet specific performance conditions. Impellers shall be dynamically balanced at the factory and machined for threading on to the pump shaft.

2.07 GRINDER CUTTERS

A. The combination centrifugal pump impeller and grinder unit shall be attached to the common motor and pump shaft made of 416SS. The grinder unit shall be on the suction side of the pump impeller and discharge directly into the impeller inlet, leaving no exposed shaft to permit packing of ground solids. The grinder shall consist of two stages. The cutting action of the second stage shall be perpendicular to the plane of the first cut for better control of the particle size. The grinder shall be capable of grinding normal domestic sewage. Both stationary and rotating cutters shall be made of 440C stainless steel hardened to Rockwell 60C and ground to close tolerance.

B. The upper(axial) cutter and stationary cutter ring shall be reversible to provide new cutting edges to double life. The stationary cutter ring shall be a slip fit into the suction opening of the volute and held in place by three (3) 300 series stainless steel screws and a retaining ring. The lower(radial) cutter shall macerate the solids against the I.D. of the cutter ring and extrude them through the slots of the cutter ring. The upper(axial) cutter shall cut off the extrusions, as they emerge from the slots of the cutter ring to eliminate any roping effect that may occur in single stage cutting action. The upper(axial) cutter shall fit over the hub of the impeller and the lower(radial) cutter shall be slip fit and secured by means of peg and hole and rotate simultaneously with the rotation of the shaft and impeller. The grinding mechanism shall be locked to the shaft by a 300 series stainless steel countersunk washer in conjunction with a 300 series stainless steel flat head cap screw threaded into the end of the shaft.

~~2.08 CASING~~

~~A. The casing shall be of the end suction volute type having sufficient strength and thickness to withstand all stress and strain from service at full operating pressure and load. The casing shall be of the centerline discharge type equipped with an automatic pipe coupling arrangement for ease of installation and piping alignment. The design shall be such that the pumps will be automatically connected to the discharge piping when lowered into position with the guide rails. The casing shall be accurately machined and bored for register fits with the suction and casing covers.~~

~~B. A volute case wear ring shall be provided to minimize impeller wear. The wear ring shall be 85-5-5-5 red brass or 80-10-10 bronze, ASTMB-43 and held by 300 series stainless steel~~

~~fasteners. The wear ring shall be easily replaceable in the field. Wear rings of any other material shall not be acceptable.~~

2.09 CONTROLS

A. Electrical power to be furnished to the site will be 1 phase, 60 Hertz, 230 volts.

B. The control circuitry shall be designed to operate on 115 +/-10% volts, 60 Hertz, single phase current, and shall control pumps driven by 5 & 7.5HP motors at 1750 RPM. The control panel shall consist of circuit breaker and controls for each pump motor actuated by a liquid level control system with all components mounted in one common enclosure. The control assembly shall provide means to operate each pump manually or automatically. When operated in the automatic mode, the control assembly shall provide means to automatically alternate the position to the "lead", "lag" and spare pumps after each pumping cycle.

C. The pump station controls shall conform to third party safety certification. The panel shall bear a serialized UL label listed for “Enclosed Industrial Control Panels”. The enclosure, and all components shall be mounted on the sub-panel or control cover shall conform to UL descriptions and procedures.

D. PANEL ENCLOSURE

1. The complete control assembly shall be contained in one NEMA 3R steel enclosure.
2. All seams shall be free of burrs and free of open voids to prevent leakage. The enclosure shall be constructed in conformance with applicable sections of the National Electrical Manufacturer's Association (NEMA). Enclosure construction to be NEMA 3 per NEMA Standard ICS-1970, Paragraph ICS1-110.12.
3. The enclosure shall be equipped with a removable inner swing panel fabricated of steel, mounted on lift off hinges. The inner swing panel shall be of adequate size to completely cover all wiring and components mounted on the back panel and shall make provision for the mounting of all basic and optional controls and instruments. The inner swing panel shall have a minimum horizontal swing of 90° and shall be held in the closed position with straight slot screws.
4. The door shall be mounted on a continuous (piano-type), vertical, steel hinge, sealed around its entire perimeter and held in the closed position with a three pad-lockable draw pull latches. The door shall have a minimum horizontal swing of 165°.
5. The enclosure shall be furnished with a removable back panel fabricated of steel, secured to the enclosure on collar studs. The back panel shall be of adequate size to accommodate all basic and optional components.
6. There shall be no holes in the enclosure for mounting the enclosure or mounting within the enclosure.
7. All control wiring shall conform to the National Electric Code. Wires connected to components mounted on the enclosure door shall be bundled and tied in accordance with good commercial practice. Bundles shall be made flexible at the hinged side of the enclosure. Adequate length and flex shall be provided to allow the door to swing to its full open position without undue stress or abrasion on the wire or insulation. Bundles shall be held in place on each side of the hinge by mechanical fastening devices.
8. The motor control shall be completely wired at the factory, except for the power feeder lines, in accordance with applicable wiring standards set forth by the National Electric Code (NEC).
9. All components shall be electrically grounded to a common ground lug mounted on the control panel sub plate. Upon installation of lift station, and before

connection of any power feeder lines, contractor shall extend grounding wire from lug to external ground in accordance with local electrical code.

E. COMPONENTS

1. All motor branch circuit breakers, and control relays shall be securely fastened to the removable back panel with screws. Properly sized NEMA rated Square-D Class 8536 motor contactors shall be provided.
2. A properly sized thermal-magnetic air circuit breaker shall be furnished for each submersible pump motor and shall have a symmetrical rms interrupting rating of 14,000 amperes at 460 volts. All circuit breakers shall be sealed by the manufacturer after calibration to prevent tampering. A mechanical disconnect mechanism shall be installed on each circuit breaker to provide a means of disconnecting power to the pump motors. Operator handles for the disconnect mechanisms shall be located on the exterior of the inner swing panel with interlocks which permit the swing panel to be opened only when the circuit breakers are in the "OFF" position.
3. A padlocking operating mechanism shall be installed on each motor circuit breaker. Operator handles for the mechanism shall be located on the exterior of the control compartment door, with interlocks which permit the door to be opened only when the circuit breakers are in the "off" position.
4. A switch shall be provided to permit the station operator to select automatic alternation of the pumps, to select pump number one to be the lead pump for each pumping cycle or to select pump number two to be the lead pump for each pumping cycle. Selector switch shall be standard duty, rated NEMA 4X, with contacts rated NEMA A600 minimum.
5. Pump mode selector switches shall be connected to permit manual start and manual stop for each pump individually, and to select automatic operation of each pump under control of the liquid level control system. Manual operation shall override the liquid level control system. Selector switch shall be standard duty, rated NEMA 4X, with contacts rated NEMA A600 minimum.
6. A pump alternation shall be provided by either the use of electrical/mechanical relay or a PLC. Pump alternator shall operate after pump shutdown.
7. Control panel shall be equipped with 24 VDC LED pilot light for each pump motor. Light shall be wired in parallel with the related pump motor starter to indicate that the motor is on.
8. The pump control panel shall be equipped to terminate pump operation due to high motor winding temperature or moisture in the motor housing and shall utilize the contacts in the pump motor. If either event should occur, the motor starter will drop out and a mechanical indicator, visible on the inner door, shall indicate the pump motor has been shutdown. The pump motor shall remain locked out until the condition has been corrected and manually reset. Control panel shall be equipped with one 24 VDC LED pilot light for each pump motor to indicate a pump fail condition.
9. The motor control center shall be equipped with a duplex grounding receptacle located on the exterior of the enclosure in weatherproof box. The receptacle circuit shall be protected by a 15 ampere thermal magnetic circuit breaker.
10. Lift station manufacturer shall furnish 115 Volt, A.C. 40-watt, vapor-tight alarm light with red globe, guard and mounting hardware. The contractor shall mount, wire and run conduit to the light as shown on the plans. Wiring shall be connected to the appropriate terminal blocks in the motor control center as shown on the lift station wiring schematic.

11. The control panel shall be equipped to monitor the incoming power and shut down the pump when required to protect the motors from damage caused by phase reversal, phase loss, voltage unbalance greater than 5% or voltage less than 83% of nominal. A time delay shall be provided to minimize nuisance trips. The motors shall automatically restart when power conditions return to normal. Control panel shall be equipped with a 24 VDC LED pilot light to indicate power failure.
12. The control circuit shall contain a pump delay circuit to prevent both pumps from simultaneous starting following a power failure.
13. An adequately sized control transformer in enclosure suitable for mounting outdoors shall be provided to provide single phase 115 volt power for the pump controls, duplex receptacle, and telemetry system. The primary side of the transformer shall be protected by a thermal magnetic air circuit breaker, specifically sized to meet the power requirements of the transformer. A mechanical operating mechanism shall be installed on the circuit breaker to provide a means of disconnecting power to the transformer. The operating handle for the mechanism shall be located on the swing door of the control panel, with interlocks which permit the swing door to be opened only when the circuit breaker is in the “OFF” position.
14. A 120 Volt AC alarm horn in a weatherproof enclosure shall be provided for remote mounting. The horn shall have a sound output of not less than 85 decibels at ten feet. A push to silence button shall also be provided.
15. An alarm silence switch and relay shall be provided to permit maintenance personnel to de-energize the external alarm device while corrective actions are underway. After silencing the alarm device, manual reset of the signal relay shall provide automatic reset of the alarm silence relay.

F. LEVEL CONTROL SYSTEM

1. The level control system shall start and stop the pump motors in response to changes in wet well levels, as set forth herein.
2. The level control system shall be the mercury float switch type, incorporating floats secured to a vertical pipe in the wet well. Rising and falling liquid level in the wet well causes switches within the floats to open and close, providing start and stop signals for the level control components.
3. The level control system shall start the motors for one pump when the liquid level in the wet well rises to the "lead pump start level". When the liquid is lowered to the "pump stop level", the system shall stop this pump. These actions shall constitute one pumping cycle. Should the wet well level rise to the "lag pump start level", the system shall start the second pump so that both pumps are operating to pump down the well. Both pumps shall stop at the same "stop" level. Should either the lead or lag pump or both fail to start, the spare pump shall be started and operate on the float control system.
4. The level control system shall utilize the pump alternator to select first one pump, then the second pump, then the third pump, to run as lead pump for a pumping cycle. Alternation shall occur at the end of a pumping cycle.
5. Pump station manufacturer shall furnish four (4) float switch assemblies for installation by the contractor. Each switch shall contain a mercury-type switch sealed in a polypropylene housing, and with sufficient length of cable, but not less than 20 feet of cable.
6. Pump station manufacturer shall furnish a separate float switch assembly, signal relay, for high water alarm function. Should the wet well level rise to the high water alarm level, the float switch assembly and relay shall energize the signal

relay. The signal relay shall complete a 115-volt AC circuit for an external alarm device. A standard duty, NEMA 4X pilot light mounted in the control panel shall indicate that a high wet well level exists..

G. PRECAST WET WELL BASINS

1. Precast wet well basins shall be constructed of Class A 5,000 psi concrete at 28-days.
2. Reinforcing steel shall be provided per ASTM A-615 / A-185.
3. Reinforcing shall meet AASHTO HS 20-44 loading
4. Base riser section shall be equal to or exceed ASTM C-357.
5. Riser sections shall be equal to or exceed ASTM C-478.
6. Shop drawings of all pre-cast structures shall be submitted to engineer for review and approval prior to structure procurement.
7. Precast wet well basins shall be constructed in accordance with ASTM C-478. All sections shall be installed complete with O-ring gaskets at each joint.
8. Pre-cast dimensions shall meet or exceed the requirements of ASTM C-478. The minimum wall thickness shall not be less than one-twelfth (1/12) of the internal diameter of the largest cone or riser section or 6-in, whichever is greater.
9. First joint in wet well basin wall shall not be less than 4-ft from floor of structure.
10. Wet well basins shall be finished with a pre-cast solid slab top with frames and grates according to the pump manufacturer requirements. Shop drawings to be submitted to engineer for review and approval prior to procurement.
11. All lifting holes shall be repaired with a mixture of cement and sand grout firmly packed.
12. Wet well steps and ladders shall be constructed according to Section 13 of ASTM C-478.
13. Provide neoprene-EPDM blended compound boot that meet the requirements of ASTM C-923 at the manhole/pipe interface unless otherwise indicated on the drawings or required by the pipe manufacturer. Contractor shall establish a water-tight connection at interface.

H. VALVE VAULT

1. Valve vault shall be constructed of Class A 5,000 psi concrete at 28-days.
2. Reinforcing steel shall be provided per ASTM A-615 / A-185.
3. Reinforcing shall meet AASHTO HS 20-44 loading
4. Base riser section shall be equal to or exceed ASTM C-357.
5. Riser sections shall be equal to or exceed ASTM C-478.
6. Shop drawings of all pre-cast structures shall be submitted to engineer for review and approval prior to structure procurement.
7. Valve vault shall be constructed in accordance with ASTM C-478. All sections shall be installed complete with O-ring gaskets at each joint.
8. Dimensions shall meet or exceed the requirements of ASTM C-478. The minimum wall thickness shall not be less than one-twelfth (1/12) of the internal diameter of the largest cone or riser section or 6-in, whichever is greater.
9. Valve vault shall be finished with a pre-cast solid slab top with frames and grates according to the pump manufacturer requirements. Shop drawings to be submitted to engineer for review and approval prior to procurement.
10. All lifting holes shall be repaired with a mixture of cement and sand grout firmly packed.
11. Provide neoprene-EPDM blended compound boot that meet the requirements of ASTM C-923 at the manhole/pipe interface unless otherwise indicated on the

drawings or required by the pipe manufacturer. Contractor shall establish a water-tight connection at interface.

I. CHECK VALVES

1. Swing type check valves shall be constructed with heavy cast iron body (ASTM A-216 Class B) with bronze seat and disc ring. Check valves shall be equipped with outside lever and adjustable weight. The valves must be tight seating and must operate without water hammer or shock. All check valves shall be rated for working pressures of 150 psi except where specifically noted otherwise.
2. Swing type check valves shall meet the requirements of AWWA Standard C5085.
3. Check valves shall be Dezurik/APCO or approved equal.

J. PLUG VALVES

1. Eccentric Plug Valves shall be of the tight-closing, resilient-faced, non-lubricating variety and shall be of eccentric design such that the valve's pressure member (plug) rises off the body seat contact area immediately upon shaft rotation during the opening movement. Valves shall be bubble-tight at the rated pressure (175 PSI through 12", 150 PSI 14" and above) and shall be satisfactory for applications involving throttling service as well as frequent or infrequent on-off service. The valve closing member should rotate approximately 90 degrees from the full-open to full-closed position.
2. The valve body shall be constructed of cast iron conforming to ASTM A126, Class B. Body ends shall be:
    a. Flanged with dimensions, facing, and drilling in full conformance with ANSI B16.1, Class 125.
    b. Mechanical Joint to meet the requirements of AWWA C111/ANSI A21.11.
    c. Grooved ends to meet the requirements of AWWA C606.
3. Eccentric Plug Valves shall have a rectangular shaped port. Port areas for 3"– 20" valves shall be a minimum 80% of full pipe area. Port area for 24" valve shall be a minimum 70% of full pipe area.
4. Valve seat surface shall be welded-in overlay, cylindrically shaped of not less than 95% pure nickel. Seat area shall be raised, with raised area completely covered with weld to ensure proper seat contact. The machined seat area shall be a minimum of .125" thick and .500" wide.
5. The valve plug shall be constructed of cast iron conforming to ASTM A126, Class B. The plug shall have a cylindrical seating surface that is offset from the center of the plug shafts. The plug shafts shall be integral. The entire plug shall be 100% encapsulated with Buna-N rubber in all valve sizes. The rubber compound shall be approximately 70 (Shore A) durometer hardness. The rubber to metal bond must withstand 75 lbs. pull under test procedure ASTM D429-73 Method B.
6. Shaft bearings, upper and lower, shall be sleeve-type metal bearings, sintered, oil impregnated and permanently lubricated Type 316 stainless steel conforming to ASTM A743 Grade CF-8M. Thrust bearings shall be Nylatron.
7. Plug valve shaft seals shall be of the multiple V-ring type (Chevron) and shall be adjustable. All packing shall be replaceable without moving the bonnet or actuator and while the valve is in service. Shaft seals shall be made of Buna-N.
8. Each valve shall be given a test against the seat at the full-rated working pressure and a hydrostatic shell test at 1.5 times the rated working pressure. Certified copies of individual tests shall be submitted when requested. Certified copies of proof-of-design tests shall be submitted upon request.

9. Manual valves shall have lever or worm gear type actuators with hand wheels, 2” square nuts, or chain wheels attached. Lever actuators shall be furnished on valves 8” and smaller where the maximum unseating pressure is 25 PSIG or less. Worm gear type actuators shall be furnished on all 4” or larger valves where the maximum unseating pressure is 25 PSIG or more.
10. All eccentric plug valves shall be Clow F-5412 (flanged), F-5413 (mechanical joint), or Dezurik/APCO or approved equal.

PART 3 EXECUTION

3.01 GENERAL

A. The general contractor shall assume full responsibility for coordination of the entire project, including verification all structures, piping, coating systems and equipment components are compatible. The general contractor shall initially operate each equipment system, and shall make all necessary adjustments so that each system is placed in proper operating condition.
B. Equipment and materials utilized for this project must be approved by the Engineer prior to installation. Approval for installation or incorporation in this project will be made only after submittal or manufacturer's shop and installation drawings, test results or other data as specified herein.
C. Installation of equipment shall be in full conformance with the manufacturer's shop drawings and requirements as approved by the Engineer. Wherever a conflict arises between manufacturer's instructions and the contract documents, the contractor shall follow the Engineer's decision at no additional cost to the Owner.

3.02 WORKMANSHIP

A. Handle carefully and protect the equipment and appurtenances to avoid damage.
B. The equipment shall be safely secured to the wall and floor in accordance with the Engineer's design drawings. All plumbing and electrical shall be in accordance with state and federal codes to ensure proper operation of the pumping system, as-well-as the safety of plant personnel. All piping and tubing shall be sealed for leaks.
C. Any evidence of improper installation shall be corrected by the Contractor. Care during storage, installation and startup shall be in strict accordance with manufacturer's recommendations.

3.03 MANUFACTURER'S SERVICES

A. The Contractor shall require the manufacturer to furnish the services of a qualified field engineer to perform the following functions in the designed periods of time. These services are to be performed at the jobsite.

1. Check-out of installation, start-up of equipment and initial operator instruction. This service shall take place after all mechanical equipment associated with the control system is installed and mechanically operable.
2. After equipment is fully operational, and before Owner will assume responsibility for the operation of the equipment, the equipment manufacturer's representative shall instruct the Owner's operating personnel in the care, maintenance and proper operation of the equipment.

B. Field Test

1. Prior to equipment startup, all equipment described herein shall be inspected for quiet operation, proper connections, and satisfactory performance by means of a functional test.

2. The pump and motor assembly shall be field tested to verify vibration is not in excess of the limits stated in the latest revision of Hydraulic Institute and NEMA MG 1.
3. The pump, motor, and controls shall be given an operational test in accordance with the standards of the Hydraulic Institute. Recordings of the test shall substantiate the correct performance of the equipment at the design head, capacity, speed and horsepower as specified herein.
4. Units apparently failing to meet the Specifications to the satisfaction of the Engineer must be more accurately tested in accordance with Hydraulic Institute Standards. If the pump fails the second test, the unit will be rejected, and the Contractor shall furnish a unit that will perform as specified.

C. Operation and Maintenance Materials

1. The pump manufacturer shall be responsible for supplying written instruction, which shall be sufficiently comprehensive to enable the operator to operate and maintain the pump and all equipment supplied by the manufacturer. Instructions shall assume that the operator is familiar with pumps, motors, piping, valves, and controls, but that he has not previously operated and/or maintained the exact equipment supplied.
2. The instruction shall be prepared as a system manual applicable solely to the pump and equipment supplied by the manufacturer to these specifications, and shall include those devices and equipment supplied by him.
3. Operation and maintenance instruction shall be specific to the equipment supplied in accordance with these specifications. Instruction manuals applicable to many different configurations and pumps, and which require the operator to selectively read portions of the instructions shall not be acceptable.

D. All costs for the above manufacturer functions including travel, lodging, meals, and incidentals shall be considered to have been included in the Contractor's lump sum bid price.

END OF SECTION 33 3200

SECTION 33 4000

STORM DRAINAGE UTILITIES

PART 1 - GENERAL

1.01 RELATED DOCUMENTS

A. Drawings and general provisions of the Contract, including General and Supplementary Conditions and Division 01 Specification Sections, apply to this Section.

1.02 SUMMARY

A. The work under this section of the Specifications includes all labor, materials, equipment, and services necessary for STORM DRAINAGE UTILITIES as shown on the Drawings and herein specified and in accordance with the Contract Documents. All costs for labor, materials, equipment, and services necessary for STORM DRAINAGE UTILITIES shall be included in the bid prices for the work.

1.03 SECTION INCLUDES

A. Storm Drainage Utility Piping
B. Storm Drainage Manholes, Frames, and Covers
C. Storm Drainage Inlets and Structures

1.04 RELATED SECTIONS

A. 31 23 00 Excavation and Fill
B. 31 25 00 Erosion and Sedimentation Controls
C. 32 13 00 Rigid Paving

1.05 DEFINITIONS

A. AHJ – Authority Having Jurisdiction

1. City of Tahlequah
2. Oklahoma Department of Environmental Quality

1.06 ACTION SUBMITTALS

A. Product Data: For each type of product indicated.

1. Pipe
2. Manholes and Inlets
3. Manholes Rings and Covers
4. Fittings
5. Clean-outs

B. Field quality-control test reports.

1.07 INFORMATIONAL SUBMITTALS

A. Photograph, video, or both the existing trees and plantings, adjoining construction, roadways, utilities, and site improvements to establish preconstruction conditions. Identify preexisting damage to trees, plantings, adjoining construction, pavements, sidewalks, and other site improvements. Include plans and notations to identify and describe any such conditions.

1.08 QUALITY ASSURANCE

A. PRECONSTRUCTION CONFERENCE

1. Conduct a preconstruction conference. Subcontractors that will be performing the work shall attend the preconstruction conference. Notify ENGINEER one week (7 days) prior to the date of the meeting.

B. REGULATORY REQUIREMENTS

1. All materials and methods shall comply with the requirements of the AHJ.
2. If the AHJ has not adopted specifications for materials and methods, the current edition of the City of Oklahoma City's Standard Specifications for Construction of Public Improvements shall be used.

1.09 PERMITS

A. CONTRACTOR shall make application; pay permit fees; provide payment and performance bonds required of the CONTRACTOR by the AHJ.

1.10 TOPOGRAPHIC SURVEY

A. OWNER has or will perform a survey of the site, stake the property limits, and provide a reference benchmark elevation.

1.11 UNDERGROUND UTILITIES

A. CONTRACTOR shall contact OKIE (811 or 1-800-522-OKIE) prior to construction for locating existing utilities.

B. The underground utilities shown on the Drawings have been located from field survey surface information and existing drawings. ENGINEER and Surveyor make no guarantee that the underground utilities shown comprise all such utilities in the area, either in service or abandoned. The underground utilities are located as accurately as possible from information available; however, ENGINEER and Surveyor further do not guarantee that the underground utilities shown are in the exact location indicated either vertically or horizontally. ENGINEER and Surveyor have not physically located the underground utilities by probing, excavating, hydrovac, or by any other means.

C. CONTRACTOR shall notify all utility companies and governmental agencies who may have utility lines on or about the premises or who may be affected by the construction. Notice shall be given no less than twenty-four hours prior to any work that may interfere with a utility.

D. All existing structures, improvement and utilities designated to remain shall be adequately protected from damage that might otherwise occur due to construction operations. Where construction comes in close proximity to existing structures, utilities or appurtenances, or if it becomes necessary to move services, poles, guy wires, pipe lines or other obstructions, CONTRACTOR shall notify and cooperate with the owner of the utility, structure, or appurtenance. The utility lines and other existing structures shown on the plans are for information only and are not guaranteed to be complete or accurate as to location and/or depth. CONTRACTOR shall be liable for damage to any utilities resulting from the CONTRACTOR's operations. During construction, all fire hydrants, valve boxes, fire or police call boxes and other existing utility controls shall be left intact, unobstructed and accessible unless noted on the plan.

E. Contractor shall satisfy themselves as to the actual existing subsurface conditions, including but not limited to the depth, location and sizes of pipe or conduits of various kinds in place prior to beginning work. Where the exact depth of any utility or obstruction is not shown on a plan, excavation shall be made prior to reaching the obstruction in order to determine adjustments in grade if needed to prevent interference. Redesign to eliminate conflicts may be necessary.

1.12 CONSTRUCTION CONTROL

A. Do not commence work until temporary erosion and sedimentation control measures are in place.

B. CONTRACTOR shall be responsible for properly laying out the work, and for lines and measurements for the work executed under the Contract Documents. Verify the figures shown on the Drawings before ordering any materials and laying out the work, and report errors or inaccuracies in writing to the ENGINEER before commencing work. The ENGINEER or his representative will in no case assume the responsibility for laying out the work.

C. Existing survey points other than those shown on the Drawings shall not be considered as acceptable control points unless approved by the ENGINEER. If approval is secured, CONTRACTOR remains responsible for maintaining them and for their accuracy. Be responsible for preserving all existing iron or metal, and all concrete survey points or monuments for the construction period.

1.13 PROJECT CONDTIONS

A. TRAFFIC

1. Obtain any required Work Zone Permits from the AHJ at least two (2) working days prior to the start of work and/or placing or removing any barricades or modifying existing traffic control devices.
2. CONTRACTOR shall be responsible for erecting and maintaining barricades and other traffic warning devices as necessary around the perimeter of construction and adjacent to any open trenches. Provide and maintain adequate detours around the work under construction. Provide sufficient lights, warning signs, and watchmen for the safety of the public.
3. Any temporary street closure shall be coordinated with and approved by the AHJ. CONTRACTOR shall establish all detour routes while streets are closed during construction. CONTRACTOR shall notify Fire, Police, and EMSA headquarters when any street is temporarily closed.
4. CONTRACTOR is responsible for the prompt replacement and/or repair of all traffic control devices and appurtenances damaged or disturbed due to construction. Any existing traffic signals, signal loops, conduits, cables, and other traffic control devices affected by the work shall be reset or replaced according to AHJ's specifications. Coordinate the work with the AHJ's traffic department.

B. UTILITY INTERRUPTIONS

1. Do not interrupt any utility serving facilities occupied by Owner or others unless permitted by OWNER and the owner(s) of the utility. Temporary utility service shall be provided for any interruption. Notify OWNER and ENGINEER one week (7 days) in advance of proposed interruption of utility.

C. SUBSURFACE CONDITIONS

1. A geotechnical report has been prepared for this Project and is available for information only. The opinions expressed in this report are those of geotechnical engineer and represent interpretations of subsoil conditions, tests, and results of analyses conducted by geotechnical engineer. Owner will not be responsible for interpretations or conclusions drawn from the data.

D. EXCAVATION AND TRENCH SAFETY SYSTEMS

1. CONTRACTOR shall be responsible for complying with State laws and Federal regulations relating to excavation and trench safety, including those which may be enacted during the performance under this Contract. CONTRACTOR is advised that Federal Regulations 29 C.F.R. 1926.650-1926.652 have been, in their most recent version as amended, in effect since January 2, 1990. CONTRACTOR shall fully comply with the U.S. Department of Labor Occupational Safety and Health Administration (OSHA) regulations pertaining to excavations, trenching, and shoring and shall provide and familiarize its employees involved in excavation and trenching with the provisions in OSHA Pamphlet Number 2226, Excavating and Trenching Operations.

1.14 HAZARDOUS CONDITIONS

A. If CONTRACTOR encounters a Hazardous Environmental Condition or if CONTRACTOR or anyone for whom CONTRACTOR is responsible creates a Hazardous Environmental Condition, CONTRACTOR shall immediately: (i) secure or otherwise isolate such condition; (ii) stop all Work in connection with such condition and in any area affected thereby (except in an emergency); and (iii) notify OWNER and ENGINEER (and promptly thereafter confirm such notice in writing). OWNER shall promptly consult with ENGINEER concerning the necessity for OWNER to retain a qualified expert to evaluate such condition or take corrective action, if any.

PART 2 - PRODUCTS

2.01 POLYPROPYLENE PIPE

A. Pipe

1. Polypropylene compound for pipe and fitting production shall be impact modified copolymer meeting the material requirements of ASTM F2736, Section 4, ASTM F2881, Section 5 and AASHTO M330, Section 6.1, for the respective diameters.
2. 12-inch through 30-inch pipe shall have a smooth interior and annular exterior corrugations and meet or exceed ASTM F2736 and AASHTO M330.
3. 36-inch through 60-inch pipe shall have a smooth interior and annular exterior corrugations and meet or exceed ASTM F2881 and AASHTO M330.

B. Pipe Joints

1. Pipe shall be joined with a gasketed integral bell & spigot joint meeting the requirements of ASTM F2736 or F2881, for the respective diameters.
2. 12-inch through 60-inch shall be watertight according to the requirements of ASTM D3212. Spigots shall have gaskets meeting the requirements of ASTM F477. Gasket shall be installed by the pipe manufacturer and covered with a removable, protective wrap to ensure the gasket is free from debris. A joint lubricant available from the manufacturer shall be used on the gasket and bell during assembly.
3. 12-inch through 60-inch diameters shall have a reinforced bell with a polymer composite band installed by the manufacturer.

C. Fittings

1. Fittings shall conform to ASTM F2736, ASTM F2881 and AASHTO M330, for the respective diameters. Bell & spigot connections shall utilize a spun-on, welded or integral bell and spigot with gaskets meeting ASTM F477. Bell & spigot fittings

joint shall meet the watertight joint performance requirements of ASTM D3212. Corrugated couplings shall be split collar, engaging at least 2 full corrugations.

2.02 CORRUGATED POLYETHYLENE PIPE

A. Pipe

1. Virgin material for pipe and fitting production shall be high-density polyethylene conforming with the minimum requirements of cell classification 424420C for 4-inch through 10-inch diameters, and 435400C for 12-inch through 24-inch diameters, as defined and described in the latest version of ASTM D3350, except that carbon black content should not exceed 4%. The 12-inch through 24-inch virgin pipe material shall comply with the notched constant ligament-stress (NCLS) test as specified in Sections 9.5 and 5.1 of AASHTO M294 and ASTM F2306 respectively. Bells shall be manufactured from PVC pipe stock, utilizing a thermo-molding process to reform the pipe stock to the specified coupler. The pipe stock used to manufacture the bell-bell coupler shall meet the performance requirements for fabricated fittings as specified in ASTM D3034.
2. Pipe shall have a smooth interior and annular exterior corrugations.
3. 4–inch through 10-inch shall meet AASHTO M252.
4. 12-inch through 24-inch shall meet AASHTO M294, Type S or ASTM F2306.

B. Pipe Joints

1. Pipe joints shall meeting the requirements of AASHTO M252, M294 or ASTM F2306. The 4-inch through 24-inch pipe shall be watertight according to the requirements of ASTM D3212. Gaskets shall meet the requirements of ASTM F477. Gaskets shall be installed by the pipe manufacturer and covered with a removable wrap to ensure the gasket is free from debris. A joint lubricant available from the manufacturer shall be used on the gasket and bell during assembly. Bells shall be bell-bell couplers manufactured from PVC. Bell-bell couplers shall be installed on one side by the manufacturer.

C. Fittings

1. Fittings shall conform to AASHTO M252, M294 or ASTM F2306. Fabricated fittings shall be welded at all accessible interior and exterior junctions.

2.03 REINFORCED CONCRETE PIPE (RCP)

A. Pipe

1. Round pipe shall meet the requirements of ASTM C76/AASHTO M170, ASTM C361, and AWWA C302.
2. Arch pipe shall meet the requirements of ASTM C506/AASHTO M259.
3. Elliptical pipe shall meet the requirements of ASTM C507/AASHTO M207.

B. Pipe Joints

1. Joints for round pipe shall meet the requirements of ASTM C443/AASHTO M315.
2. Joints for arch pipe shall meet the requirements of ASTM C990.

2.04 CORRUGATED METAL PIPE (CMP)

A. Steel Pipe and Fittings (Type I Round, Type II Arch)

1. Metallic coated corrugated steel culverts: AASHTO M36, Type I Round, Type II Arch, with fittings of similar form and construction as pipe.
    a. Zinc coated (galvanized) sheet steel: AASHTO M218

b. Aluminum coated (Type II) hot-dipped sheet steel: AASHTO M274

2. Externally coated or clad culverts
   a. Bituminous coated corrugated metal culvert pipe and pipe arches: Type A per AASHTO M190
   b. Pre-coated corrugated steel culverts: AASHTO M245
3. Connecting bands shall be corrugated steel with O-ring seals.

2.05 POLYVINYL CHLORIDE (PVC) PIPE AND FITTINGS

A. SOLID WALL PVC - All solid wall PVC pipe and fittings shall conform to the requirements of the appropriate ASTM listed below or as modified herein.

1. ASTM D-3034 –
   a. Standard Specification for "Type PSM Poly (Vinyl Chloride) (VC) Sewer Pipe and Fittings". Pipe and fittings shall have a minimum stiffness of forty-six (46 psi) pounds per square inch and a minimum SDR of thirty-five (35). Pipe and fittings may be supplied in sizes ranging from four (4”) inches to fifteen (15”) inches in diameter.
   b. The pipe shall be made of PVC plastic having a cell classification of 12454-B or 12454-C or 12364-C or 13364-B (with minimum tensile modulus of 500,000 psi) as defined in ASTM D-1784. The fittings shall be made of PVC plastic having a cell classification of 12454-B, 12454-C, or 13343-C as defined in ASTM D-1784.
   c. Elastomeric Gasketed Joints shall be used to provide a watertight seal and shall meet the requirements of ASTM D-3212.
2. ASTM F-679 –
   a. Standard Specification for "Poly (Vinyl Chloride) (PVC) Large-Diameter Plastic Gravity Sewer Pipe and Fittings". Pipe and fittings shall have a minimum stiffness of forty-six (46 psi) pounds per square inch and a minimum SDR of thirty-five (35). Pipe and fittings may be supplied in sizes ranging from eighteen (18”) inches to thirty-six (36”) inches in diameter.
   b. The pipe and fitting materials shall be made of PVC plastic having a minimum cell classification of 12364-C or 12454-C as defined in ASTM D-1784. Homopolymer PVC compounds must equal or exceed the requirements of the above listed minimum cell classification number.
   c. Integral Bell Gasket Joint shall be used to provide a watertight seal and shall meet the requirements of ASTM D-3212.
3. ASTM F-789 –
   a. Standard Specification for "Type PS-46 Poly (Vinyl Chloride) (PVC) Plastic Gravity Flow Sewer Pipe and Fittings". Pipe and fittings shall have a minimum stiffness of forty-six (46 psi) pounds per square inch. Pipe and fittings may be supplied in sizes ranging from four (4”) inches to eighteen (18”) inches in diameter.
   b. The pipe shall be made of PVC plastic having a minimum cell classification of 12164-B as defined in ASTM D-1784. The fittings shall be made of PVC plastic having a cell classification of 12454-C or 13343-C as defined in ASTM D-1784.
   c. Elastomeric Gasketed Joints shall be used to provide a watertight seal and shall meet the requirements of ASTM D-3212. Joints shall also be compatible to ASTM D-3034 joint dimensions.

B. PROFILE WALL (PVC) - All profile (open or closed) wall PVC pipe and fittings shall conform to the requirements of the appropriate ASTM listed below and modified herein. Regardless of size, open profile wall pipes will be allowed only on sections of pipe when there are no apparent service connections. Otherwise, open profile wall pipe will not be allowed.

1. ASTM F-794 –
    a. Standard Specification for "Poly (Vinyl Chloride) (PVC) Profile Gravity Sewer Pipe and Fittings Based on Controlled Inside Diameter". Pipe and fittings shall have a minimum stiffness of forty-six (46 psi) pounds per square inch. Pipe and fittings may be supplied in sizes ranging from twelve (12”) inches to forty-eight (48”) inches in diameter.
    b. The pipe and fittings shall be made of PVC plastic having a minimum cell classification of 12454-B or 12364-C as defined in ASTM D-1784.
    c. Gasketed Joint Systems shall be used. The integral bell gasketed joint, coupling or fitting joints shall be designed so that when assembled, the gasket will be compressed radially on the pipe spigot or in the bell to form a watertight seal. The joints shall be designed to comply with and show no leakage when tested in accordance with ASTM D-3212.
    d. Closed profile PVC pipes manufactured with a gasketed joint coupling system, with no bell and spigot, may be used for slip-lining installations.
    e. Couplings shall form a watertight seal when assembled with plain end pipe and show no sign of leakage when tested in accordance with ASTM D-3212.
2. ASTM F-949 –
    a. Standard Specification for "Poly (Vinyl Chloride) (PVC) Corrugated Sewer Pipe with a Smooth Interior and Fittings". Pipe and fittings shall have a minimum stiffness of fifty (50 psi) pounds per square inch. Pipe and fittings may be supplied in sizes ranging from twelve (12”) inches to thirty-six (36”) inches in diameter.
    b. The pipe shall be made of PVC plastic having a minimum cell classification 12454-B or 12454-C as defined in ASTM D-1784. The fittings shall be made of PVC plastic having a cell classification of 12464-B, 12464-C, or 13343-C as defined in ASTM D-1784.
    c. Elastomeric Gasketed Joints shall be used to provide watertight seal and shall meet the requirements of ASTM D-3212.

C. SPECIAL PVC PIPE - Special PVC pipe and fittings shall conform to the requirements of the appropriate standards listed below or as modified herein.

1. ASTM D-2241 –
    a. Standard Specifications for Polyvinyl Chloride (PVC) Pressure-rated Pipe (SDR Series). Pipe and fittings shall have a minimum SDR of thirty-two and one-half (32-1/2) and may be supplied in sizes ranging from four (4) inches to thirty-six (36) inches in diameter.
    b. The pipe and fittings shall be made of PVC compounds having a cell classification of 12454-B, 12454-C, or 14333-D as defined in ASTM D-1784.
    c. Elastomeric gasketed joints meeting the requirements of ASTM D-3212 shall be used to provide a watertight seal.
2. AWWA C-900 and AWWA C-905 –

a. Standards for PVC Pressure Pipe from four (4”) inches through twelve (12”) inches, and fourteen (14”) inches through thirty-six (36”) inches, respectively. Pipes shall have a minimum DR rating of eighteen (18) for diameters four (4”) inches through twelve (12”) inches. For pipes greater than twelve (12”) inches in diameter, the minimum DR shall be thirty-two and one-half (32 1/2).
b. The pipe and fittings shall be made of PVC compounds having a cell classification of 12454-A or 12454-B as defined in ASTM D-1784.
c. Elastomeric gasketed joints meeting the requirements of ASTM D-3139, when measured in accordance with ASTM-2122, shall be used to provide a watertight seal.

2.06 BACKWATER VALVES

A. Cast-Iron Backwater Valves:

1. Description: ASME A112.14.1, gray-iron body and bolted cover, with bronze seat.
2. Horizontal type; with swing check valve and hub-and-spigot ends.
3. Combination horizontal and manual gate-valve type; with swing check valve, integral gate valve, and hub-and-spigot ends.
4. Terminal type; with bronze seat, swing check valve, and hub inlet.

B. Plastic Backwater Valves:

1. Description: Horizontal type; with PVC body, PVC removable cover, and PVC swing check valve.

2.07 CLEANOUTS

A. Cast-iron Cleanouts:

1. Manufacturers: Subject to compliance with requirements.
2. Description: ASME A112.36.2M, round, gray-iron housing with clamping device and round, secured, scoriated, gray-iron cover. Include gray-iron ferrule with inside calk or spigot connection and countersunk, tapered-thread, brass closure plug.
3. Top-Loading Classification(s): Heavy Duty.
4. Sewer Pipe Fitting and Riser to Cleanout: ASTM A 74, Service class, cast-iron soil pipe and fittings.

B. PVC Cleanouts:

1. Description: PVC body with PVC threaded plug. Include PVC sewer pipe fitting and riser to cleanout of same material as sewer piping.

2.08 MANHOLES AND JUNCTION BOXES

A. Standard Precast Concrete Manholes:

1. Description: ASTM C 478, precast, reinforced concrete, of depth indicated, with provision for sealant joints.
2. All concrete for manhole and base shall be Class A concrete with a minimum compressive strength of 4,000 psi.
3. Diameter: 48 inches minimum.
4. Wall Thickness:

a. The minimum wall thickness shall not less than 5-in and shall not be less than one-twelfth (1/12) of the internal diameter of the largest cone or riser.
b. Manholes with 60-in and 48-in diameters shall have a 5-inch minimum thickness, and lengths to provide depth indicated.
c. Manholes with 72-in diameters shall have a 6-inch minimum thickness, and lengths to provide depth indicated.
d. Manholes with 84-in diameters shall have a 7-inch minimum thickness, and lengths to provide depth indicated.
e. Manholes with 96-in diameters shall have an 8-inch minimum thickness, and lengths to provide depth indicated.

5. Base section shall have a 9-inch minimum floor slab thickness. Floor slab shall be integral with base section. Increase thickness of precast concrete sections or add concrete to base section as required to prevent flotation.
6. Provided riser sections as needed to achieve the required manhole depth.
7. Top section shall be eccentric-cone type unless flat-slab-top type is indicated, and top of cone of size that matches grade rings.
8. Joint sealant shall meet ASTM C 990, bitumen or butyl rubber.
9. Pipe connectors shall be resilient pipe connectors per ASTM C 923, cast or fitted into manhole walls, for each pipe connection.
10. Steps: Individual FRP steps; FRP ladder; or ASTM A 615/A 615M, deformed, 1/2-inch steel reinforcing rods encased in ASTM D 4101, PP, wide enough to allow worker to place both feet on one step and designed to prevent lateral slippage off step. Cast or anchor steps into sidewalls at 12-inch to 16-inch intervals. Omit steps if total depth from floor of manhole to finished grade is less than 60 inches.
11. Adjusting Rings: Interlocking HDPE rings with level or sloped edge in thickness and diameter matching manhole frame and cover, and of height required to adjust manhole frame and cover to indicated elevation and slope. Include sealant recommended by ring manufacturer.
12. Grade Rings: Reinforced-concrete rings, 6-inch to 9-inch total thickness, to match diameter of manhole frame and cover, and height as required to adjust manhole frame and cover to indicated elevation and slope.

B. Designed Precast Concrete Manholes:

1. Description: ASTM C 913; designed according to ASTM C 890 for A-16 (AASHTO HS20-44), heavy-traffic, structural loading; of depth, shape, and dimensions indicated, with provision for sealant joints.
2. Ballast: Increase thickness of one or more precast concrete sections or add concrete to manhole as required to prevent flotation.
3. Joint Sealant: ASTM C 990, bitumen or butyl rubber.
4. Resilient Pipe Connectors: ASTM C 923, cast or fitted into manhole walls, for each pipe connection.
5. Steps: Individual FRP steps; FRP ladder; or ASTM A 615/A 615M, deformed, 1/2-inch steel reinforcing rods encased in ASTM D 4101, PP, wide enough to allow worker to place both feet on one step and designed to prevent lateral slippage off step. Cast or anchor steps into sidewalls at 12-inch to 16-inch intervals. Omit steps if total depth from floor of manhole to finished grade is less than 60 inches.
6. Adjusting Rings: Interlocking HDPE rings with level or sloped edge in thickness and diameter matching manhole frame and cover, and of height required to adjust manhole frame and cover to indicated elevation and slope. Include sealant recommended by ring manufacturer.

7. Grade Rings: Reinforced-concrete rings, 6-inch to 9-inch total thickness, to match diameter of manhole frame and cover, and of height required to adjust manhole frame and cover to indicated elevation and slope.

C. Frames and Covers

1. Manhole frames and covers shall be to the dimensions and specifications of the current Oklahoma Department of Transportation, City of Oklahoma City, or the jurisdictional utility standards.

2.09 CONCRETE

A. General: Cast-in-place concrete according to ACI 318, ACI 350/350R, and the following:

1. Cement: ASTM C 150, Type II.
2. Fine Aggregate: ASTM C 33, sand.
3. Coarse Aggregate: ASTM C 33, crushed gravel.
4. Water: Potable.

B. Portland Cement Design Mix: 4000 psi minimum, with 0.45 maximum water/cementitious materials ratio.

1. Reinforcing Fabric: ASTM A 185, steel, welded wire fabric, plain.
2. Reinforcing Bars: ASTM A 615, Grade 60 deformed steel.

C. Manhole Channels and Benches: Factory or field formed from concrete. Portland cement design mix, 4000 psi minimum, with 0.45 maximum water/cementitious materials ratio. Include channels and benches in manholes.

1. Channels: Concrete invert, formed to same width as connected piping, with height of vertical sides to three-fourths of pipe diameter. Form curved channels with smooth, uniform radius and slope.
    a. Invert Slope: 2 percent through manhole.
2. Benches: Concrete, sloped to drain into channel.
    a. Slope: 8 percent.

D. Ballast and Pipe Supports: Portland cement design mix, 4000 psi minimum, with 0.58 maximum water/cementitious materials ratio.

1. Reinforcing Fabric: ASTM A 185, steel, welded wire fabric, plain.
2. Reinforcing Bars: ASTM A 615, Grade 60 deformed steel.

2.10 CURB, GUTTER, AND COMBINATION INLETS

A. Curb Inlets: Made with vertical curb opening of materials and dimensions according to the current Oklahoma Department of Transportation, City of Oklahoma City, or the standards of the jurisdictional utility.

B. Gutter Inlets: Made with horizontal gutter opening of materials and dimensions according to the current Oklahoma Department of Transportation, City of Oklahoma City, or the standards of the jurisdictional utility. Include heavy-duty frames and grates.

C. Combination Inlets: Made with vertical curb and horizontal gutter openings of materials and dimensions according to the current Oklahoma Department of Transportation, City of Oklahoma City, or the standards of the jurisdictional utility.

D. Frames and Grates: Heavy duty, according to the current Oklahoma Department of Transportation, City of Oklahoma City, or the standards of the jurisdictional utility.

2.11 OUTLETS

A. Pipe outlet headwalls, wing walls, precast end sections, aprons, and rip-rap shall be according to the current Oklahoma Department of Transportation, City of Oklahoma City, and the standards of the jurisdictional utility.

2.12 CONCRETE CHANNELS, SWALES, AND FLUMES

A. The materials and execution for concrete channels, swales, and flumes shall per the requirements of 32 13 00 Rigid Paving.

PART 3 - EXECUTION

3.01 EARTHWORK

A. Excavation, trenching, and backfilling are specified in Section 31 23 00 Excavation and Fill.

3.02 PIPING INSTALLATION

A. General Locations and Arrangements: Drawing plans and details indicate general location and arrangement of underground storm drainage piping. Location and arrangement of piping layout take into account design considerations. Install piping as indicated, to extent practical. Where specific installation is not indicated, follow piping manufacturer's written instructions.

B. Install piping beginning at low point, true to grades and alignment indicated with unbroken continuity of invert. Place bell ends of piping facing upstream. Install gaskets, seals, sleeves, and couplings according to manufacturer's written instructions for use of lubricants, cements, and other installation requirements.

C. Install manholes for changes in direction unless fittings are indicated. Use fittings for branch connections unless direct tap into existing sewer is indicated.

D. When installing pipe under streets or other obstructions that cannot be disturbed, use pipe-jacking process of microtunneling.

E. Install gravity-flow, nonpressure drainage piping according to the following:

1. Install piping with 36-inch minimum cover.
2. Install corrugated steel piping according to ASTM A 798.
3. Install corrugated aluminum piping according to ASTM B 788.
4. Install PE corrugated sewer piping according to ASTM D 2321.
5. Install PVC sewer piping according to ASTM D 2321 and ASTM F 1668.
6. Install PVC profile gravity sewer piping according to ASTM D 2321 and ASTM F 1668.
7. Install reinforced-concrete sewer piping according to ASTM C 1479 and ACPA's "Concrete Pipe Installation Manual."

3.03 PIPE JOINT CONSTRUCTION

A. Join gravity-flow, nonpressure drainage piping according to the following:

1. Join corrugated steel sewer piping according to ASTM A 798.
2. Join corrugated aluminum sewer piping according to ASTM B 788.
3. Join corrugated PE piping according to ASTM D 3212 for push-on joints.
4. Join PVC corrugated sewer piping according to ASTM D 2321 for elastomeric-seal joints.
5. Join PVC sewer piping according to ASTM D 2321 and ASTM D 3034 for elastomeric-seal joints or ASTM D 3034 for elastomeric-gasketed joints.
6. Join PVC profile gravity sewer piping according to ASTM D 2321 for elastomeric-seal joints or ASTM F 794 for gasketed joints.

7. Join reinforced-concrete sewer piping according to ACPA's "Concrete Pipe Installation Manual" for rubber-gasketed joints.

3.04 BACKWATER VALVE INSTALLATION

A. Install horizontal-type backwater valves in piping where indicated.
B. Install combination horizontal and manual gate-valve type in piping and in manholes where indicated.
C. Install terminal-type backwater valves on end of piping and in manholes where indicated.

3.05 CLEANOUT INSTALLATION

A. Install cleanouts and riser extensions from sewer pipes to cleanouts at grade. Use cast-iron soil pipe fittings in sewer pipes at branches for cleanouts and cast-iron soil pipe for riser extensions to cleanouts. Install piping so cleanouts open in direction of flow in sewer pipe.

1. Use Light-Duty, top-loading classification cleanouts in earth areas.
2. Use Heavy-Duty, top-loading classification cleanouts in vehicle-traffic service areas.

B. Set cleanout frames and covers in cast-in-place concrete block, 18-inch by 18-inch by 12-inch deep.
C. Set cleanout frames and covers in earth areas with tops 1-inch above surrounding earth grade.
D. Set cleanout frames and covers in concrete pavement and roads with tops flush with pavement surface.

3.06 DRAIN INSTALLATION

A. Install type of drains in locations indicated.

1. Use Light-Duty, top-loading classification drains in earth areas.
2. Use Heavy-Duty, top-loading classification drains in vehicle-traffic service areas.

B. Embed drains in 4-inch minimum concrete around bottom and sides.
C. Fasten grates to drains if indicated.
D. Set drain frames and covers with tops flush with pavement surface.

3.07 MANHOLE INSTALLATION

A. General: Install manholes, complete with appurtenances and accessories indicated.
B. Install precast concrete manhole sections with sealants according to ASTM C 891.
C. Where specific manhole construction is not indicated, follow manhole manufacturer's written instructions.
D. Set tops of frames and covers flush with finished surface of manholes that occur in pavements. Set tops 3-inch above finished surface elsewhere unless otherwise indicated.

3.08 CATCH BASIN INSTALLATION

A. Construct catch basins to sizes and shapes indicated.
B. Set frames and grates to elevations indicated.

3.09 STORMWATER INLET AND OUTLET INSTALLATION

A. Construct inlet head walls, aprons, and sides of reinforced concrete, as indicated.
B. Construct riprap of broken stone, as indicated.
C. Install outlets that spill onto grade, anchored with concrete, where indicated.

D. Install outlets that spill onto grade, with flared end sections that match pipe, where indicated.

E. Construct energy dissipaters at outlets, as indicated.

3.10 CONCRETE PLACEMENT

A. Place cast-in-place concrete according to ACI 318.

3.11 CONNECTIONS

A. Connect nonpressure, gravity-flow drainage piping in building's storm building drains.

B. Make connections to existing piping and underground manholes.

1. Use commercially manufactured fittings for piping branch connections. Remove section of existing pipe; install fitting into existing piping; and encase entire fitting, plus 6-inch overlap, with not less than 6 inches of concrete with 28-day compressive strength of 3000 psi.
2. Make branch connections from side into existing piping, NPS 4 to NPS 10. Remove section of existing pipe, install fitting into existing piping, and encase entire fitting with not less than 6 inches of concrete with 28-day compressive strength of 3000 psi.
3. Make branch connections to manholes and structures by cutting into existing unit and creating an opening large enough to allow 3 inches of concrete to be packed around entering connection. Cut end of connection pipe passing through pipe or structure wall to conform to shape of and be flush with inside wall unless otherwise indicated. On outside of pipe, manhole, or structure wall, encase entering connection in 6 inches of concrete for minimum length of 12 inches to provide additional support of collar from connection to undisturbed ground.
    a. Use concrete that will attain a minimum 28-day compressive strength of 3000 psi unless otherwise indicated.
    b. Use epoxy-bonding compound as interface between new and existing concrete and piping materials.
4. Protect existing piping, manholes, and structures to prevent concrete or debris from entering while making tap connections. Remove debris or other extraneous material that may accumulate.

3.12 CLOSING ABANDONED STORM DRAINAGE SYSTEMS

A. Removing Piping

1. Pipe indicated to be removed shall be excavated and removed from the project site and legally disposed according to City, State, and Federal regulations.
2. Backfill trench and voids according to 31 23 00 Excavation and Fill.

B. Abandoned Piping

1. Pipe indicated to be abandoned in place shall be completely filled with Portland Cement grout having a minimum twenty-eight (28) day compressive strength of five hundred pounds per square inch (500 psi).

C. Abandoned Manholes and Structures: Excavate around manholes and structures as required and use one procedure below:

1. Remove manhole or structure and close open ends of remaining piping.

2. Remove top of manhole or structure down to at least 48 inches below final grade. Fill to within 12 inches of top with stone, rubble, gravel, or compacted dirt. Fill to top with concrete.
3. Backfill to grade according to 31 23 00 Excavation and Fill.

3.13 IDENTIFICATION

A. Materials and their installation are specified in 31 23 00 Excavation and Fill. Arrange for installation of green warning tape directly over piping and at outside edge of underground structures.

1. Use detectable warning tape over nonferrous piping and over edges of underground structures.

3.14 FIELD QUALITY CONTROL

A. Inspect interior of piping to determine whether line displacement or other damage has occurred. Inspect at completion of Project.

1. Submit separate reports for each system inspection.
2. Defects requiring correction include the following:
    a. Alignment: Less than full diameter of inside of pipe is visible between structures.
    b. Deflection: Flexible piping with deflection that prevents passage of ball or cylinder of size not less than 92.5 percent of piping diameter.
    c. Damage: Crushed, broken, cracked, or otherwise damaged piping.
    d. Infiltration: Water leakage into piping.
    e. Exfiltration: Water leakage from or around piping.
3. Replace defective piping using new materials, and repeat inspections until defects are within allowances specified.
4. Re-inspect and repeat procedure until results are satisfactory.

B. Test new piping systems, and parts of existing systems that have been altered, extended, or repaired, for leaks and defects.

1. Do not enclose, cover, or put into service before inspection and approval.
2. Test completed piping systems according to requirements of authorities having jurisdiction.
3. Schedule tests and inspections by authorities having jurisdiction with at least 24 hours' advance notice.
4. Submit separate report for each test.
5. Gravity-Flow Storm Drainage Piping: Test according to requirements of authorities having jurisdiction, UNI-B-6, and the following:
    a. Exception: Piping with soil tight joints unless required by authorities having jurisdiction.
    b. Test plastic piping according to ASTM F 1417.
    c. Test concrete piping according to ASTM C 924.

C. Replace leaking piping using new materials, and repeat testing until leakage is within allowances specified.

3.15 CLEANING

A. Clean interior of piping of dirt and superfluous materials. Flush with water.

END OF SECTION 33 4000

SECTION 33 4600

SUBDRAINAGE

PART 1 GENERAL

1.01 RELATED DOCUMENTS

A. Drawings and general provisions of the Contract, including General and Supplementary Conditions and Division 01 Specification Sections, apply to this Section.

1.02 SUMMARY

A. The work under this section of the Specifications includes all labor, materials, equipment, and services necessary for SUBDRAINAGE as shown on the Drawings and herein specified and in accordance with the Contract Documents. All costs for labor, materials, equipment, and services necessary for SUBDRAINAGE shall be included in the bid prices for the work.

1.03 SECTION INCLUDES

A. Perforated-wall pipe and fittings.
B. Drainage conduits.
C. Geotextile filter fabrics.

1.04 RELATED SECTIONS

A. 31 2300 Excavation and Fill
B. 33 4000 Storm Drainage Utilities

1.05 DEFINITIONS

A. AHJ – Authority Having Jurisdiction

1. City of Tahlequah

1.06 ACTION SUBMITTALS

A. Product Data:

1. Drainage conduits, including rated capacities.
2. Drainage aggregates.
3. Geotextile filter fabrics.

1.07 INFORMATIONAL SUBMITTALS

A. Material Test Reports:

1. Source of drainage aggregate material.
2. Classification according to ASTM D-2487.
3. Laboratory Compaction curve according to ASTM D-698.

1.08 DELIVERY, STORAGE, AND HANDLING

1.09 QUALITY ASSURANCE

A. PRECONSTRUCTION CONFERENCE

1. Conduct a preconstruction conference. Subcontractors that will be performing the work shall attend the preconstruction conference.

B. REGULATORY REQUIREMENTS

1. All materials and methods shall comply with the requirements of the AHJ.
2. If the AHJ has not adopted specifications for materials and methods, the Oklahoma Department of Transportation's 2009 Specifications shall be used.

1.10 PERMITS

A. CONTRACTOR shall make application; pay permit fees; provide payment and performance bonds required of the CONTRACTOR by the AHJ.

1.11 TOPOGRAPHIC SURVEY

A. OWNER has or will perform a survey of the site, stake the property limits, and provide a reference benchmark elevation. CONTRACTOR shall be responsible for any additional offset staking or layout survey required to locate improvements and control grade of improvements. Be responsible for the proper location and level of the work and for the maintenance of reference lines and benchmarks. Any re-staking requested by the CONTRACTOR shall be done at his expense.

1.12 UNDERGROUND UTILITIES

A. CONTRACTOR shall contact OKIE (811 or 1-800-522-OKIE) prior to construction for locating existing utilities.

B. The underground utilities shown on the Drawings have been located from field survey surface information and existing drawings. ENGINEER and Surveyor make no guarantee that the underground utilities shown comprise all such utilities in the area, either in service or abandoned. The underground utilities are located as accurately as possible from information available; however, ENGINEER and Surveyor further do not guarantee that the underground utilities shown are in the exact location indicated either vertically or horizontally. ENGINEER and Surveyor have not physically located the underground utilities by probing, excavating, hydrovac, or by any other means.

C. CONTRACTOR shall notify all utility companies and governmental agencies who may have utility lines on or about the premises or who may be affected by the construction. Notice shall be given no less than twenty-four hours prior to any work that may interfere with a utility.

D. All existing structures, improvement and utilities designated to remain shall be adequately protected from damage that might otherwise occur due to construction operations. Where construction comes in close proximity to existing structures, utilities or appurtenances, or if it becomes necessary to move services, poles, guy wires, pipe lines or other obstructions, CONTRACTOR shall notify and cooperate with the owner of the utility, structure, or appurtenance. The utility lines and other existing structures shown on the plans are for information only and are not guaranteed to be complete or accurate as to location and/or depth. CONTRACTOR shall be liable for damage to any utilities resulting from the CONTRACTOR's operations. During construction, all fire hydrants, valve boxes, fire or police call boxes and other existing utility controls shall be left intact, unobstructed and accessible unless noted on the plan.

E. Contractor shall satisfy themselves as to the actual existing subsurface conditions, including but not limited to the depth, location and sizes of pipe or conduits of various kinds in place prior to beginning work. Where the exact depth of any utility or obstruction is not shown on a plan, excavation shall be made prior to reaching the obstruction in order to determine adjustments in grade if needed to prevent interference. Redesign to eliminate conflicts may be necessary.

1.13 CONSTRUCTION CONTROL

A. Do not commence work until temporary erosion and sedimentation control measures are in place.

B. CONTRACTOR shall be responsible for properly laying out the work, and for lines and measurements for the work executed under the Contract Documents. Verify the figures shown on the Drawings before ordering any materials and laying out the work, and report errors or inaccuracies in writing to the ENGINEER before commencing work. The

ENGINEER or his representative will in no case assume the responsibility for laying out the work.

C. Existing survey points other than those shown on the Drawings shall not be considered as acceptable control points unless approved by the ENGINEER. If approval is secured, CONTRACTOR remains responsible for maintaining them and for their accuracy. Be responsible for preserving all existing iron or metal, and all concrete survey points or monuments for the construction period.

1.14 PROJECT CONDTIONS

A. TRAFFIC

1. Obtain any required Work Zone Permits from the AHJ at least two (2) working days prior to the start of work and/or placing or removing any barricades or modifying existing traffic control devices.
2. CONTRACTOR shall be responsible for erecting and maintaining barricades and other traffic warning devices as necessary around the perimeter of construction and adjacent to any open trenches. Provide and maintain adequate detours around the work under construction. Provide sufficient lights, warning signs, and watchmen for the safety of the public.
3. Any temporary street closure shall be coordinated with and approved by the AHJ. CONTRACTOR shall establish all detour routes while streets are closed during construction. CONTRACTOR shall notify Fire, Police, and EMSA headquarters when any street is temporarily closed.
4. CONTRACTOR is responsible for the prompt replacement and/or repair of all traffic control devices and appurtenances damaged or disturbed due to construction. Any existing traffic signals, signal loops, conduits, cables, and other traffic control devices affected by the work shall be reset or replaced according to AHJ's specifications. Coordinate the work with the AHJ's traffic department.

B. UTILITY INTERRUPTIONS

1. Do not interrupt any utility serving facilities occupied by Owner or others unless permitted by OWNER and the owner(s) of the utility. Temporary utility service shall be provided for any interruption. Notify OWNER and ENGINEER one week (7 days) in advance of proposed interruption of utility.

C. SUBSURFACE CONDITIONS

1. A geotechnical report has been prepared for this Project and is available for information only. The opinions expressed in this report are those of geotechnical engineer and represent interpretations of subsoil conditions, tests, and results of analyses conducted by geotechnical engineer. Owner will not be responsible for interpretations or conclusions drawn from the data.

D. EXCAVATION AND TRENCH SAFETY SYSTEMS

1. CONTRACTOR shall be responsible for complying with State laws and Federal regulations relating to excavation and trench safety, including those which may be enacted during the performance under this Contract. CONTRACTOR is advised that Federal Regulations 29 C.F.R. 1926.650-1926.652 have been, in their most recent version as amended, in effect since January 2, 1990. CONTRACTOR shall fully comply with the U.S. Department of Labor Occupational Safety and Health Administration (OSHA) regulations pertaining to excavations, trenching, and shoring and shall provide and familiarize its employees involved in excavation and trenching with the provisions in OSHA Pamphlet Number 2226, Excavating and Trenching Operations.

1.15 HAZARDOUS CONDITIONS

A. If CONTRACTOR encounters a Hazardous Environmental Condition or if CONTRACTOR or anyone for whom CONTRACTOR is responsible creates a Hazardous Environmental Condition, CONTRACTOR shall immediately: (i) secure or otherwise isolate such condition; (ii) stop all Work in connection with such condition and in any area affected thereby (except in an emergency); and (iii) notify OWNER and ENGINEER (and promptly thereafter confirm such notice in writing). OWNER shall promptly consult with ENGINEER concerning the necessity for OWNER to retain a qualified expert to evaluate such condition or take corrective action, if any.

PART 2 PRODUCTS

2.01 PERFORATED-WALL PIPES AND FITTINGS

A. Perforated PE Pipe and Fittings:

1. 3-inch through 24-inch: ASTM F 667, SCS 606, and AASHTO M 252, Type CP; corrugated, for coupled joints.
2. Fittings shall comply with ASTM F 667.
3. Pipe material shall be high density polyethylene conforming with the minimum requirements of cell classification 424410C as defined and described in the latest version of ASTM D3350; or ASTM D1248 Type III, Class C, Category 4, Grade P33.
4. Couplings: Manufacturer's standard, band type.

B. Perforated PVC Sewer Pipe and Fittings: AASHTO M 278, ASTM D 2729, bell-and-spigot ends, for loose joints.

2.02 SOLID WALL PIPES AND FITTINGS

A. Solid Wall Pipes and Fittings shall be PE or PVC pipe according to the requirements of 33 4000 “Storm Drainage Utilities”.

2.03 SOIL MATERIALS

A. Drainage Aggregate: Drainage aggregate shall be composed of hard, durable mineral particle free from organic matter, clay balls, soft particles and other impurities or foreign matter. The material shall conform to the following grading requirements:

Sieve No. or Size	Percent passing by weight
1-1/2 in.	100
¾ in.	50 to 100
No. 4	20 to 40
No. 16	7 to 20
No. 50	0 to 5
No. 100	0 to 2

B. Satisfactory Soils shall be according to 31 2300 “Excavation and Fill”.

2.04 GEOTEXTILE FILTER FABRICS

A. Geotextiles for pipe underdrain and drainage systems shall meet the requirements of AASHTO M 288, “Subsurface Drainage Geotextile Requirements.” Geotextile shall be according to AASHTO M 288, Table 2, with from 15 to 50 percent of in-situ soil passing the No. 200 sieve.

B. Geotextiles shall have a flow rate range from 110 to 330 gpm/sq. ft, when tested according to ASTM D 4491.

PART 3 EXECUTION

3.01 EXAMINATION

A. Examine surfaces and areas for suitable conditions where subdrainage systems are to be installed.
B. If subdrainage is required for landscaping, locate and mark existing utilities, underground structures, and aboveground obstructions before beginning installation and avoid disruption and damage of services.
C. Verify that drainage panels installed as part of foundation wall waterproofing is properly positioned to drain into subdrainage system.
D. Proceed with installation only after unsatisfactory conditions have been corrected.

3.02 EARTHWORK

A. Excavating, trenching, and backfilling are specified in Section 31 23 00 Excavation and Fill.

3.03 FOUNDATION DRAINAGE INSTALLATION

A. Place impervious fill material on subgrade adjacent to bottom of footing after concrete footing forms have been removed. Place and compact impervious fill to dimensions indicated, but not less than 6 inches deep and 12 inches wide.
B. Lay flat-style geotextile filter fabric in trench and overlap trench sides.
C. Place supporting layer of drainage course over compacted subgrade and geotextile filter fabric, to compacted depth of not less than 4 inches.
D. Encase pipe with sock-style geotextile filter fabric before installing pipe. Connect sock sections with adhesive or tape.
E. Install drainage piping as indicated on Drawings and manufacturer's requirements.
F. Add drainage course to width of at least 6 inches on side away from wall and to top of pipe to perform tests.
G. After satisfactory testing, cover drainage piping to width of at least 6 inches on side away from footing and above top of pipe to within 12 inches of finish grade.
H. Install drainage course and wrap top of drainage course with flat-style geotextile filter fabric.
I. Place layer of flat-style geotextile filter fabric over top of drainage course, overlapping edges at least 6 inches.
J. Place backfill material over compacted drainage course. Place material in loose-depth layers not exceeding 6 inches. Thoroughly compact each layer. Final backfill to finish elevations and slope away from building.

3.04 UNDERSLAB DRAINAGE INSTALLATION

A. Excavate for underslab drainage system after subgrade material has been compacted but before drainage course has been placed. Include horizontal distance of at least 6 inches between drainage pipe and trench walls. Grade bottom of trench excavations to required slope, and compact to firm, solid bed for drainage system.
B. Lay flat-style geotextile filter fabric in trench and overlap trench sides.
C. Place supporting layer of drainage course over compacted subgrade and geotextile filter fabric, to compacted depth of not less than 4 inches.
D. Encase pipe with sock-style geotextile filter fabric before installing pipe. Connect sock sections with adhesive or tape.
E. Install drainage piping as indicated on Drawings and manufacturer's requirements.
F. Add drainage course to width of at least 6 inches on side away from wall and to top of pipe to perform tests.
G. After satisfactory testing, cover drainage piping with drainage course to elevation of bottom of slab, and compact and wrap top of drainage course with flat-style geotextile filter fabric.

3.05 RETAINING-WALL DRAINAGE INSTALLATION

A. Lay flat-style geotextile filter fabric in trench and overlap trench sides.
B. Place supporting layer of drainage course over compacted subgrade to compacted depth of not less than 4 inches.
C. Encase pipe with sock-style geotextile filter fabric before installing pipe. Connect sock sections with adhesive or tape.
D. Install drainage piping as indicated on Drawings and manufacturer's requirements.
E. Add drainage course to width of at least 6 inches on side away from wall and to top of pipe to perform tests.
F. After satisfactory testing, cover drainage piping to width of at least 6 inches on side away from footing and above top of pipe to within 12 inches of finish grade.
G. Place drainage course in layers not exceeding 3 inches in loose depth; compact each layer placed and wrap top of drainage course with flat-style geotextile filter fabric.
H. Place layer of flat-style geotextile filter fabric over top of drainage course, overlapping edges at least 6 inches.
I. Fill to Grade: Place satisfactory soil fill material over compacted drainage course. Place material in loose-depth layers not exceeding 6 inches. Thoroughly compact each layer. Fill to finish grade.

3.06 PIPING INSTALLATION

A. Install piping beginning at low points of system, true to grades and alignment indicated, with unbroken continuity of invert. Bed piping with full bearing in filtering material. Install gaskets, seals, sleeves, and couplings according to manufacturer's written instructions and other requirements indicated.

1. Foundation Subdrainage: Install piping level and with a minimum cover of 36 inches unless otherwise indicated.
2. Underslab Subdrainage: Install piping level.
3. Retaining-Wall Subdrainage: When water discharges at end of wall into storm water piping system, install piping level and with a minimum cover of 36 inches unless otherwise indicated.
4. Lay perforated pipe with perforations down.
5. Excavate recesses in trench bottom for bell ends of pipe. Lay pipe with bells facing upslope and with spigot end entered fully into adjacent bell.

B. Use increasers, reducers, and couplings made for different sizes or materials of pipes and fittings being connected. Reduction of pipe size in direction of flow is prohibited.
C. Install thermoplastic piping according to ASTM D 2321.

3.07 PIPE JOINT CONSTRUCTION

A. Join perforated PE pipe and fittings with couplings according to ASTM D 3212 with loose banded, coupled, or push-on joints.
B. Join perforated PVC sewer pipe and fittings according to ASTM D 3212 with loose bell-and-spigot, push-on joints.
C. Special Pipe Couplings: Join piping made of different materials and dimensions with special couplings made for this application. Use couplings that are compatible with and fit materials and dimensions of both pipes.

3.08 BACKWATER VALVE INSTALLATION

A. Comply with requirements for backwater valves specified in Section 33 40 00 Storm Drainage Utilities.
B. Install horizontal backwater valves in header piping downstream from perforated subdrainage piping.
C. Install horizontal backwater valves in manholes or pits where indicated.

3.09 CLEANOUT INSTALLATION

A. Comply with requirements for cleanouts specified in Section 33 40 00 Storm Drainage Utilities.

B. Cleanouts for Subdrainage:

1. Install cleanouts from piping to grade. Locate cleanouts at beginning of piping run and at changes in direction. Install fittings so cleanouts open in direction of flow in piping.
2. In vehicular-traffic areas, use NPS 4 cast-iron soil pipe and fittings for piping branch fittings and riser extensions to clean-out. Set cleanout frames and covers in a cast-in-place concrete anchor, 18 by 18 by 12 inches deep. Set top of cleanout flush with grade.
3. In non-vehicular-traffic areas, use NPS 4 cast-iron pipe and fittings for piping branch fittings and riser extensions to clean-out. Set cleanout frames and covers in a cast-in-place concrete anchor, 12 by 12 by 4 inches deep. Set top of cleanout 1 inch above grade.
4. Comply with requirements for concrete specified in Section 32 13 00 Rigid Paving.

C. Cleanouts for Underslab Subdrainage:

1. Install cleanouts and riser extensions from piping to top of slab. Locate cleanouts at beginning of piping run and at changes in direction. Install fittings so cleanouts open in direction of flow in piping.
2. Use NPS 4 cast-iron soil pipe and fittings for piping branch fittings and riser extensions to cleanout flush with top of slab.

3.10 CONNECTIONS

A. Comply with requirements for piping specified in Section 33 40 00 Storm Drainage Utilities. Drawings indicate general arrangement of piping, fittings, and specialties.

3.11 IDENTIFICATION

A. Arrange for installation of green warning tapes directly over piping. Comply with requirements for underground warning tapes specified in specified in 31 23 00 Excavation and Fill.

1. Install PE warning tape or detectable warning tape over ferrous piping.
2. Install detectable warning tape over nonferrous piping and over edges of underground structures.

3.12 FIELD QUALITY CONTROL

A. Tests and Inspections:

1. After installing drainage course to top of piping, test drain piping with water to ensure free flow before backfilling.
2. Remove obstructions, replace damaged components, and repeat test until results are satisfactory.

B. Drain piping will be considered defective if it does not pass tests and inspections.

C. Prepare test and inspection reports.

3.13 CLEANING

A. Clear interior of installed piping and structures of dirt and other superfluous material as work progresses. Maintain swab or drag in piping and pull past each joint as it is completed. Place plugs in ends of uncompleted pipe at end of each day or when work stops.

END OF SECTION 33 4600

SECTION 33 4613

FOUNDATION DRAINAGE SYSTEM

PART 1 - GENERAL

1.1 SUMMARY

A. Work required for this section includes foundation drainage system including supplementary items necessary to complete their installation.

1.2 ACTION SUBMITTALS

A. Product Data: Manufacturer's technical literature for each product and system indicated.

1. Include manufacturer's specifications for materials, finishes, construction details, installation instructions, and recommendations for maintenance.

B. Shop Drawings: Show details of fabrication and installation, including plans, elevations, sections, details of components and attachments to other work. Distinguish between shop and field-assembled work.

1. Show details and installation drawings for interface with drainage pipe system.

C. Samples:

1. Geotextile Filter Fabric: Two 12 inch squares.
2. Perforated drain pipe:

a. Pipe: 12" inch long piece.
b. Fittings: One of each.

1.3 COORDINATION

A. Coordinate and schedule sequencing with materials trades for concrete walls, foundations, concrete finishing, waterproofing, excavation, and backfilling.

PART 2 - PRODUCTS

2.1 MATERIALS

A. Molded-Sheet Drainage Panels: Refer to Division 07 waterproofing section.

B. Filter Fabric: Woven or nonwoven geotextile filter fabric of polypropylene or polyester fibers, or combination of both. Flow rates range from 110 to 330 gpm per sq. ft. when tested according to ASTM D 4491.

C. Perforated Drainage Pipe: ASTM D 2729 Polyvinyl Chloride nominal 4 inch, bell-and-spigot pipe including fittings, cleanouts, etc.

D. Impervious Fill: Clay, gravel and sand mixture.

E. Drainage Fill: Washed, evenly graded mixture of crushed stone, or crushed or uncrushed gravel, ASTM D 448, coarse aggregate, Size 57, with 100 percent passing 1-1/2 inch sieve and not more than 5 percent passing No. 8 sieve.

PART 3 - EXECUTION

3.1 EXAMINATION

A. Acceptance of Surfaces and Conditions: Examine substrates to receive products and systems and associated work for compliance with requirements and other conditions affecting performance. Proceed only when unsatisfactory conditions have been corrected in a manner complying with Contract Documents. Starting work within a particular area will be construed as acceptance of surface conditions.

3.2 INSTALLATION, GENERAL

A. Installation Quality Standards: In addition to standards listed elsewhere, perform Work according to following, unless otherwise specified:

1. Respective manufacturer/fabricator's written installation instructions.
2. Accepted submittals.
3. Contract Documents.

3.3 PREPARATION

A. General: Comply with manufacturer's instructions, recommendations, and specifications for cleaning and surface preparation. Surfaces shall have no defects, contaminants, or errors which would result in poor or potentially defective installation or would cause latent defects in Work.

3.4 INSTALLATION, FOUNDATION DRAINAGE SYSTEM

A. Molded-Sheet Drainage Panels: Refer to Division 07 waterproofing section.

B. Bottom Impervious Fill:

1. Place impervious fill material on subgrade adjacent to bottom of footing after concrete footings have been cured and forms removed.
2. Place and compact impervious fill not less than 6 inches deep and 12 inches wide.

C. Filter Fabric:

1. Cut fabric roll to proper width prior to installation.
2. Include sufficient width to conform to trench perimeter and for minimum six inch top overlap.
3. Lap upstream roll over downstream roll minimum of two feet, to form shingled effect.
4. Ensure fabric continuity as fabric conforms to excavation surface during drainage fill placement and compaction.
5. Following drainage fill placement, fold fabric over aggregate to form longitudinal lap.

6. Place backfill soil over lap at sufficient intervals to maintain lap during subsequent backfilling.
7. Exercise care during fabric installation to prevent natural or fill soils from intermixing with drainage aggregate.

D. Drainage Fill:

1. Place supporting layer of drainage fill over compacted subgrade to compacted depth of not less than 4 inches.
2. After installing drainage piping, add drainage fill to width of at least 6 inches on side away from wall and to top of pipe to perform tests.
3. After satisfactory testing, cover piping to width of at least 6 inches on side away from footing and above top of pipe at least 12 inches.
4. Place drainage fill in layers not exceeding 3 inches in loose depth; compact each layer placed.

E. Drain Pipe: Comply with ASTM D 2321 and as follows:

1. Excavate to proper depths, profiles and lines required for proper drainage.
2. Provide minimum slope of 1 percent (1:100) unless otherwise indicated. Slope to drain.
3. Lay drain pipe solidly bedded in filtering material with bells facing upslope and spigot end inserted fully into adjacent bell.
4. Provide full bearing for each pipe section throughout its length to true grades and alignment, and continuous slope in direction of flow.
5. Lay perforated pipe with perforations down and joints tightly closed in accordance with pipe manufacturer's recommendations.
6. Provide fittings and couplings as required.
7. Joint PVC pipe and fittings according to ASTM D 3034 with elastomeric seal gaskets according to ASTM D 2321.
8. Joint perforated, PVC pipe and fittings according to ASTM D 2729, with loose, bell-and spigot joints.
9. Provide riser extensions and clean-outs at grade at approximately 100 feet on center. Locate at beginning of pipe run and changes in direction.
10. Set top of clean-outs 1 inch above grade and secure in 12 inch square by 4 inch deep concrete anchor.
11. Extend piping and connect to building storm drainage system or building sump pumps.

3.5 FIELD QUALITY CONTROL

A. Testing: After installing drainage fill to top of pipe, test drain piping with water to ensure free flow before backfilling. Remove obstructions, replace damaged components, and repeat test until results are satisfactory.

3.6 CLEANING

A. Clear interior of installed piping and structures of dirt and other superfluous material as work progresses. Maintain swab or drag in piping and pull past each joint as it is completed. Place plugs in ends of uncompleted pipe at end of each day or when work stops.

END OF SECTION